APPENDIX 1

SAR Measurement Data

TABLE OF CONTENTS

EXHIBIT 1. PRESCAN MEASUREMENT SUMMARY 4

FILE NAME: ICOM-435Q FA-S81V 150MHZ MB-133 BP-283.DA52:0 5
FILE NAME: ICOM-435Q FA-S81V 150MHZ MB-133 BP-284.DA52:0 6
FILE NAME: ICOM-435Q FA-S81V 150MHZ MB-136 BP-284.DA52:0 7

EXHIBIT 2. HEAD SAR MEASUREMENT SUMMARY 8

FILE NAME: ICOM-435Q BP-284 FA-S81V 136MHZ.DA52:0 10
FILE NAME: ICOM-435Q BP-284 FA-S81V 143MHZ.DA52:0 11
FILE NAME: ICOM-435Q BP-284 FA-S81V 150MHZ.DA52:0 12
FILE NAME: ICOM-435Q BP-284 FA-S82V 150MHZ.DA52:0 13
FILE NAME: ICOM-435Q BP-284 FA-S82V 156MHZ.DA52:0 14
FILE NAME: ICOM-435Q BP-284 FA-S82V 162MHZ.DA52:0 15
FILE NAME: ICOM-435Q BP-284 FA-S83V 160MHZ.DA52:0 16
FILE NAME: ICOM-435Q BP-284 FA-S83V 167MHZ.DA52:0 17
FILE NAME: ICOM-435Q BP-284 FA-S83V 174MHZ.DA52:0 18
FILE NAME: ICOM-435Q BP-284 FA-S81VS 136MHZ.DA52:0 19
FILE NAME: ICOM-435Q BP-284 FA-S81VS 143MHZ.DA52:0 20
FILE NAME: ICOM-435Q BP-284 FA-S82VS 150MHZ.DA52:0 22
FILE NAME: ICOM-435Q BP-284 FA-S82VS 156MHZ.DA52:0 23
FILE NAME: ICOM-435Q BP-284 FA-S82VS 162MHZ.DA52:0 24
FILE NAME: ICOM-435Q BP-284 FA-S83VS 160MHZ.DA52:0 25
FILE NAME: ICOM-435Q BP-284 FA-S83VS 167MHZ.DA52:0 26
FILE NAME: ICOM-435Q BP-284 FA-S83VS 174MHZ.DA52:0 27
FILE NAME: ICOM-435Q BP-284 FA-S67VC 150MHZ 150MHZ.DA52:0 28
FILE NAME: ICOM-435Q BP-284 FA-S67VC 150MHZ 156MHZ.DA52:0 29
FILE NAME: ICOM-435Q BP-284 FA-S67VC 150MHZ 162MHZ.DA52:0 30
FILE NAME: ICOM-435Q BP-284 FA-S67VC 150MHZ 168MHZ.DA52:0 31
FILE NAME: ICOM-435Q BP-284 FA-S67VC 150MHZ 174MHZ.DA52:0 32
FILE NAME: ICOM-435Q BP-284 FA-S67VC 155MHZ 150MHZ.DA52:0 33
FILE NAME: ICOM-435Q BP-284 FA-S67VC 155MHZ 156MHZ.DA52:0 34
FILE NAME: ICOM-435Q BP-284 FA-S67VC 155MHZ 162MHZ.DA52:0 35
FILE NAME: ICOM-435Q BP-284 FA-S67VC 155MHZ 168MHZ.DA52:0 36
FILE NAME: ICOM-435Q BP-284 FA-S67VC 155MHZ 174MHZ.DA52:0 37
FILE NAME: ICOM-435Q BP-284 FA-S67VC 160MHZ 150MHZ.DA52:0 38
FILE NAME: ICOM-435Q BP-284 FA-S67VC 160MHZ 156MHZ.DA52:0 39
FILE NAME: ICOM-435Q BP-284 FA-S67VC 160MHZ 162MHZ.DA52:0 40
FILE NAME: ICOM-435Q BP-284 FA-S67VC 160MHZ 168MHZ.DA52:0 41
FILE NAME: ICOM-435Q BP-284 FA-S67VC 160MHZ 174MHZ.DA52:0 42
FILE NAME: ICOM-435Q BP-284 FA-S67VC 165MHZ 150MHZ.DA52:0 43
FILE NAME: ICOM-435Q BP-284 FA-S67VC 165MHZ 156MHZ.DA52:0 44
FILE NAME: ICOM-435Q BP-284 FA-S67VC 165MHZ 162MHZ.DA52:0 45
FILE NAME: ICOM-435Q BP-284 FA-S67VC 165MHZ 168MHZ.DA52:0 46
FILE NAME: ICOM-435Q BP-284 FA-S67VC 165MHZ 174MHZ.DA52:0 47
FILE NAME: ICOM-435Q BP-284 FA-S67VC 170MHZ 150MHZ.DA52:0 48
FILE NAME: ICOM-435Q BP-284 FA-S67VC 170MHZ 156MHZ.DA52:0 49
FILE NAME: ICOM-435Q BP-284 FA-S67VC 170MHZ 162MHZ.DA52:0 50
FILE NAME: ICOM-435Q BP-284 FA-S67VC 170MHZ 168MHZ.DA52:0 51
FILE NAME: ICOM-435Q BP-284 FA-S67VC 170MHZ 174MHZ.DA52:0 52

EXHIBIT 3. BODY SAR MEASUREMENT SUMMARY 53

FILE NAME: ICOM-435Q BP-283 FA-S81V 136MHZ.DA52:0 55
FILE NAME: ICOM-435Q BP-283 FA-S81V 143MHZ.DA52:0 56
FILE NAME: ICOM-435Q BP-283 FA-S81V 150MHZ.DA52:0 57
FILE NAME: ICOM-435Q BP-283 FA-S82V 150MHZ.DA52:0 58

FILE NAME: ICOM-435Q BP-283 FA-S82V 156MHZ.DA52:0 59
FILE NAME: ICOM-435Q BP-283 FA-S82V 162MHZ.DA52:0 60
FILE NAME: ICOM-435Q BP-283 FA-S83V 160MHZ.DA52:0 61
FILE NAME: ICOM-435Q BP-283 FA-S83V 167MHZ.DA52:0 62
FILE NAME: ICOM-435Q BP-283 FA-S83V 174MHZ.DA52:0 63
FILE NAME: ICOM-435Q BP-283 FA-S81VS 136MHZ.DA52:0 64
FILE NAME: ICOM-435Q BP-283 FA-S81VS 143MHZ.DA52:0 65
FILE NAME: ICOM-435Q BP-283 FA-S81VS 150MHZ.DA52:0 66
FILE NAME: ICOM-435Q BP-283 FA-S82VS 150MHZ.DA52:0 67
FILE NAME: ICOM-435Q BP-283 FA-S82VS 156MHZ.DA52:0 68
FILE NAME: ICOM-435Q BP-283 FA-S82VS 162MHZ.DA52:0 69
FILE NAME: ICOM-435Q BP-283 FA-S83VS 160MHZ.DA52:0 70
FILE NAME: ICOM-435Q BP-283 FA-S83VS 167MHZ.DA52:0 71
FILE NAME: ICOM-435Q BP-283 FA-S83VS 174MHZ.DA52:0 72
FILE NAME: ICOM-435Q BP-283 FA-S67VC 150MHZ 150MHZ.DA52:0 73
FILE NAME: ICOM-435Q BP-283 FA-S67VC 150MHZ 162MHZ.DA52:0 74
FILE NAME: ICOM-435Q BP-283 FA-S67VC 150MHZ 174MHZ.DA52:0 75
FILE NAME: ICOM-435Q BP-283 FA-S67VC 155MHZ 150MHZ.DA52:0 76
FILE NAME: ICOM-435Q BP-283 FA-S67VC 155MHZ 162MHZ.DA52:0 77
FILE NAME: ICOM-435Q BP-283 FA-S67VC 155MHZ 174MHZ.DA52:0 78
FILE NAME: ICOM-435Q BP-283 FA-S67VC 160MHZ 150MHZ.DA52:0 79
FILE NAME: ICOM-435Q BP-283 FA-S67VC 160MHZ 162MHZ.DA52:0 80
FILE NAME: ICOM-435Q BP-283 FA-S67VC 160MHZ 174MHZ.DA52:0 81
FILE NAME: ICOM-435Q BP-283 FA-S67VC 165MHZ 150MHZ.DA52:0 82
FILE NAME: ICOM-435Q BP-283 FA-S67VC 165MHZ 162MHZ.DA52:0 83
FILE NAME: ICOM-435Q BP-283 FA-S67VC 165MHZ 174MHZ.DA52:0 84
FILE NAME: ICOM-435Q BP-283 FA-S67VC 170MHZ 150MHZ.DA52:0 85
FILE NAME: ICOM-435Q BP-283 FA-S67VC 170MHZ 162MHZ.DA52:0 86
FILE NAME: ICOM-435Q BP-283 FA-S67VC 170MHZ 174MHZ.DA52:0 87

EXHIBIT 1. PRESCAN MEASUREMENT SUMMARY

With MB-133

Battery	Antenna	Power (dBm)	CH	CH. Freq	BODY SAR1g (W/Kg)	BODY SAR10g (W/Kg)
					BP-284	BP-284
				(MHz)	2010mAh	2010mAh
BP-283	FA-S81V 136-150 MHz	37.03	3	150	0.26	0.20
BP-284		37.03	3	150	0.24	0.18

With BP-233

Belt Clip	Antenna	Power (dBm)	CH	CH. Freq	BODY SAR1g (W/Kg)	BODY SAR10g (W/Kg)
					BP-284	BP-284
				(MHz)	2010mAh	2010mAh
MB-133	FA-S81V 136-150 MHz	37.03	3	150	0.26	0.20
MB-136		37.03	3	150	0.25	0.19

Test Laboratory: Ultratech Group of Labs

FILE NAME: ICOM-435Q FA-S81V 150MHz MB-133 BP-283.da52:0

DUT: IC-F3400DT; Type: UHF Transceiver; Serial: 01000151

Communication System: UID 0, CW (0); Frequency: 150 MHz; Duty Cycle: 1:1
Medium parameters used: f = 150 MHz; σ = 0.818 S/m; ε_r = 62.016; ρ = 1000 kg/m^3 ; Phantom section: Flat Section ; Measurement Standard: DASY5 (IEEE/IEC/ANSI C63.19-2007)

DASY Configuration:

- Probe: ES3DV3 - SN3250; ConvF(7.18, 7.18, 7.18); Calibrated: 3/22/2016;
- Sensor-Surface: 3mm (Mechanical Surface Detection)
- Electronics: DAE4 Sn874; Calibrated: 8/24/2015
- Phantom: ELI 4.0; Type: QD OVA 001 BB; Serial: 1057
- DASY52 52.8.8(1222); SEMCAD X 14.6.10(7331)

Configuration_Body_IC-F3400DT/Body Back, P=5W, d=0mm/Area Scan (61x151x1):

Interpolated grid: dx=1.500 mm, dy=1.500 mm
Maximum value of SAR (interpolated) = 0.589 W/kg

Configuration_Body_IC-F3400DT/Body Back, P=5W, d=0mm/Zoom Scan (5x5x7) (6x8x7)/Cube 0:

Measurement grid: dx=7.5mm, dy=7.5mm, dz=5mm
Reference Value = 27.03 V/m; Power Drift = -0.04 dB
Peak SAR (extrapolated) = 0.786 W/kg
SAR(1 g) = 0.516 W/kg; SAR(10 g) = 0.391 W/kg (SAR corrected for target medium)
Maximum value of SAR (measured) = 0.586 W/kg

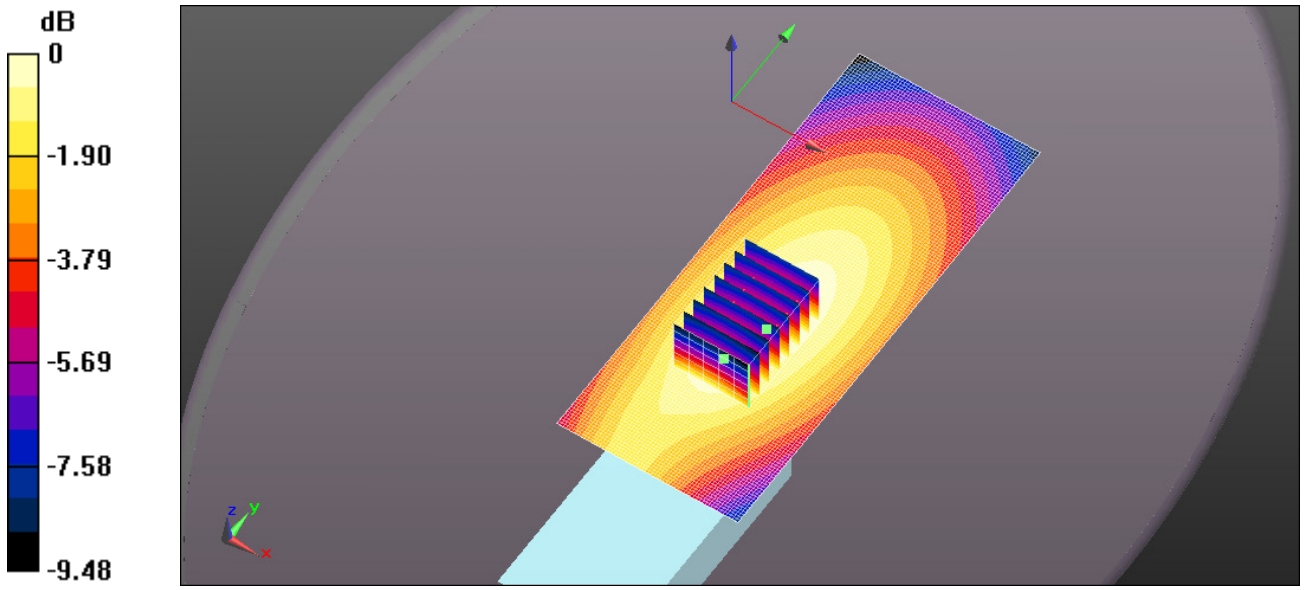

0 dB = 0.589 W/kg = -2.30 dBW/kg

Test Laboratory: Ultratech Group of Labs

FILE NAME: ICOM-435Q FA-S81V 150MHz MB-133 BP-284.da52:0

DUT: IC-F3400DT; Type: UHF Transceiver; Serial: 01000151

Communication System: UID 0, CW (0); Frequency: 150 MHz; Duty Cycle: 1:1
Medium parameters used: f = 150 MHz; σ = 0.818 S/m; ε_r = 62.016; ρ = 1000 kg/m^3 ; Phantom section: Flat Section ; Measurement Standard: DASY5 (IEEE/IEC/ANSI C63.19-2007)

DASY Configuration:

- Probe: ES3DV3 - SN3250; ConvF(7.18, 7.18, 7.18); Calibrated: 3/22/2016;
- Sensor-Surface: 3mm (Mechanical Surface Detection)
- Electronics: DAE4 Sn874; Calibrated: 8/24/2015
- Phantom: ELI 4.0; Type: QD OVA 001 BB; Serial: 1057
- DASY52 52.8.8(1222); SEMCAD X 14.6.10(7331)

Configuration_Body_IC-F3400DT/Body Back, P=5W, d=0mm/Area Scan (61x151x1):

Interpolated grid: dx=1.500 mm, dy=1.500 mm
Maximum value of SAR (interpolated) = 0.529 W/kg

Configuration_Body_IC-F3400DT/Body Back, P=5W, d=0mm/Zoom Scan (5x5x7) (5x5x7)/Cube 0:

Measurement grid: dx=7.5mm, dy=7.5mm, dz=5mm
Reference Value = 25.19 V/m; Power Drift = -0.24 dB
Peak SAR (extrapolated) = 0.686 W/kg
SAR(1 g) = 0.470 W/kg; SAR(10 g) = 0.354 W/kg (SAR corrected for target medium)
Maximum value of SAR (measured) = 0.533 W/kg

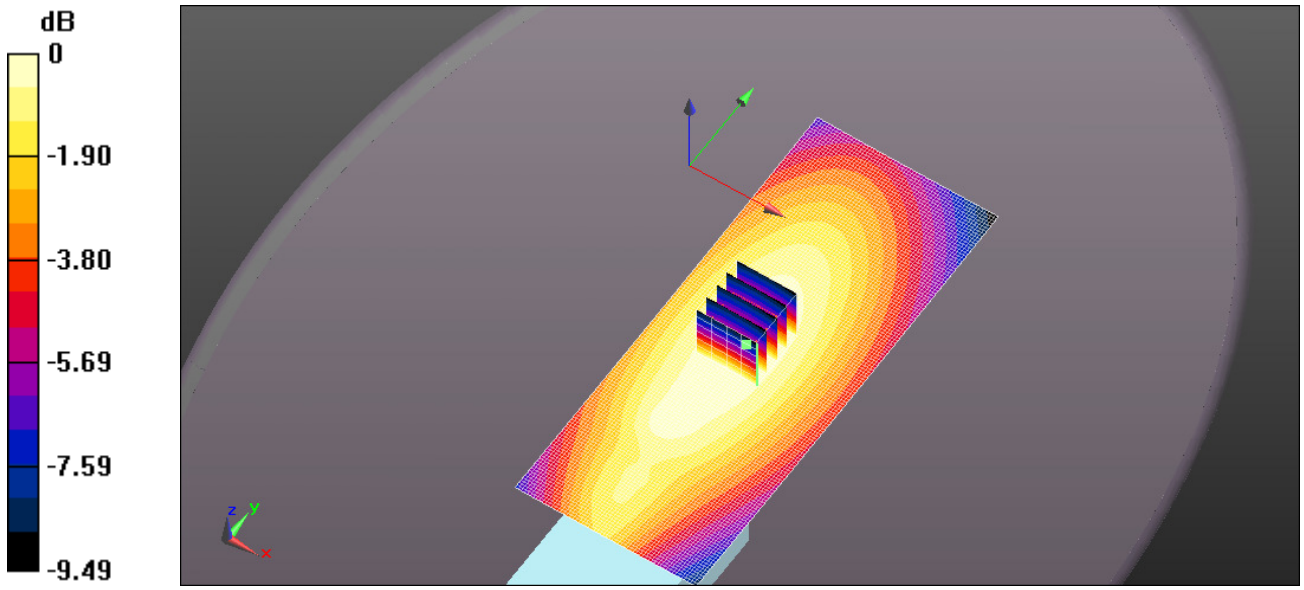

0 dB = 0.529 W/kg = -2.77 dBW/kg

Test Laboratory: Ultratech Group of Labs

FILE NAME: ICOM-435Q FA-S81V 150MHz MB-136 BP-284.da52:0

DUT: IC-F3400DT; Type: UHF Transceiver; Serial: 01000151

Communication System: UID 0, CW (0); Frequency: 150 MHz; Duty Cycle: 1:1
Medium parameters used: f = 150 MHz; σ = 0.818 S/m; ε_r = 62.016; ρ = 1000 kg/m^3 ; Phantom section: Flat Section ; Measurement Standard: DASY5 (IEEE/IEC/ANSI C63.19-2007)

DASY Configuration:

- Probe: ES3DV3 - SN3250; ConvF(7.18, 7.18, 7.18); Calibrated: 3/22/2016;
- Sensor-Surface: 3mm (Mechanical Surface Detection)
- Electronics: DAE4 Sn874; Calibrated: 8/24/2015
- Phantom: ELI 4.0; Type: QD OVA 001 BB; Serial: 1057
- DASY52 52.8.8(1222); SEMCAD X 14.6.10(7331)

Configuration_Body_IC-F3400DT/Body Back, P=5W, d=0mm/Area Scan (61x151x1):

Interpolated grid: dx=1.500 mm, dy=1.500 mm
Maximum value of SAR (interpolated) = 0.546 W/kg

Configuration_Body_IC-F3400DT/Body Back, P=5W, d=0mm/Zoom Scan (5x5x7) (5x5x7)/Cube 0:

Measurement grid: dx=7.5mm, dy=7.5mm, dz=5mm
Reference Value = 25.37 V/m; Power Drift = -0.12 dB
Peak SAR (extrapolated) = 0.708 W/kg
SAR(1 g) = 0.486 W/kg; SAR(10 g) = 0.368 W/kg (SAR corrected for target medium)
Maximum value of SAR (measured) = 0.552 W/kg

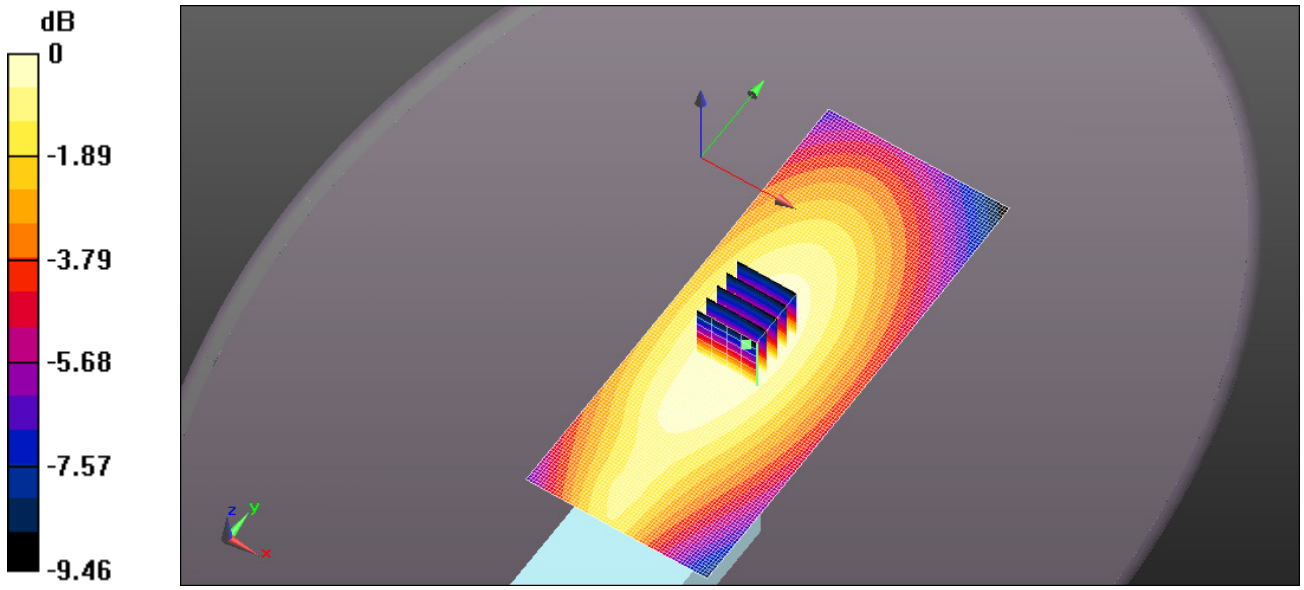

0 dB = 0.546 W/kg = -2.63 dBW/kg

EXHIBIT 2. HEAD SAR MEASUREMENT SUMMARY

Antenna	Power (dBm)	CH	CH. Freq	HEAD SAR1g (W/Kg)	HEAD SAR10g (W/Kg)
				BP-284	BP-284
			(MHz)	3210mAh	3210mAh
FA-S81V 136-150 MHz	37.02	1	136	0.52	0.40
	36.97	2	143	1.42	1.09
	37.03	3	150	0.30	0.23
FA-S82V 150-156 MHz	37.03	3	150	0.85	0.66
	37.03	4	156	1.19	0.91
	37.07	6	162	0.42	0.32
FA-S83V 160-174 MHz	37.05	5	160	0.59	0.45
	37.12	7	167	0.23	0.18
	37.12	8	174	0.08	0.06
FA-S81VS 136-150 MHz	37.02	1	136	0.73	0.84
	36.97	2	143	0.67	0.87
	37.03	3	150	1.09	0.52
FA-S82VS 150-162 MHz	37.03	3	150	0.29	0.22
	37.03	4	156	0.49	0.36
	37.07	6	162	0.10	0.07
FA-S83VS 160-174 MHz	37.05	5	160	0.16	0.12
	37.12	7	167	0.77	0.56
	37.12	8	174	0.21	0.15

Cut Antenna	Power (dBm)	CH	CH. Freq	HEAD SAR1g (W/Kg)	HEAD SAR10g (W/Kg)
				BP-284	BP-284
			(MHz)	3210mAh	3210mAh
FA-S67VC 150MHz	37.03	3	150	0.35	0.27
	37.03	4	156	0.69	0.53
	37.05	6	162	0.53	0.40
	37.07	8	168	0.30	0.23
	37.13	9	174	0.20	0.15
FA-S67VC 155MHz	37.03	3	150	0.21	0.16
	37.03	4	156	0.44	0.33
	37.05	6	162	0.71	0.54
	37.07	8	168	0.58	0.44
	37.13	9	174	0.39	0.30
FA-S67VC 160MHz	37.03	3	150	0.10	0.08
	37.03	4	156	0.20	0.15
	37.05	6	162	0.40	0.30
	37.07	8	168	0.85	0.64
	37.13	9	174	0.79	0.59
FA-S67VC 165MHz	37.03	3	150	0.06	0.05
	37.03	4	156	0.12	0.09
	37.05	6	162	0.22	0.17
	37.07	8	168	0.42	0.32
	37.13	9	174	0.81	0.61
FA-S67VC 170MHz	37.03	3	150	0.06	0.04
	37.03	4	156	0.10	0.07
	37.05	6	162	0.17	0.12
	37.07	8	168	0.30	0.23
	37.13	9	174	0.70	0.53

Test Laboratory: Ultratech Group of Labs

FILE NAME: ICOM-435Q BP-284 FA-S81V 136MHz.da52:0

DUT: IC-F3400DT; Type: UHF Transceiver; Serial: 01000151

Communication System: UID 0, CW (0); Frequency: 136 MHz; Duty Cycle: 1:1
Medium parameters used: f = 136 MHz; σ = 0.749 S/m; ε_r = 51.345; ρ = 1000 kg/m^3 ; Phantom section: Flat Section ; Measurement Standard: DASY5 (IEEE/IEC/ANSI C63.19-2007)

DASY Configuration:

- Probe: ES3DV3 - SN3250; ConvF(7.57, 7.57, 7.57); Calibrated: 3/22/2016;
- Sensor-Surface: 3mm (Mechanical Surface Detection)
- Electronics: DAE4 Sn874; Calibrated: 8/24/2015
- Phantom: ELI 4.0; Type: QD OVA 001 BB; Serial: 1057
- DASY52 52.8.8(1222); SEMCAD X 14.6.10(7331)

Configuration_Head_IC-F3400DT/Head Front, P=5W, d=25mm/Area Scan (61x151x1):

Interpolated grid: dx=1.500 mm, dy=1.500 mm
Maximum value of SAR (interpolated) = 1.14 W/kg

Configuration_Head_IC-F3400DT/Head Front, P=5W, d=25mm/Zoom Scan (5x5x7) (5x5x7)/Cube 0:

Measurement grid: dx=7.5mm, dy=7.5mm, dz=5mm
Reference Value = 35.78 V/m; Power Drift = -0.22 dB
Peak SAR (extrapolated) = 1.45 W/kg
SAR(1 g) = 1.03 W/kg; SAR(10 g) = 0.793 W/kg (SAR corrected for target medium)
Maximum value of SAR (measured) = 1.15 W/kg

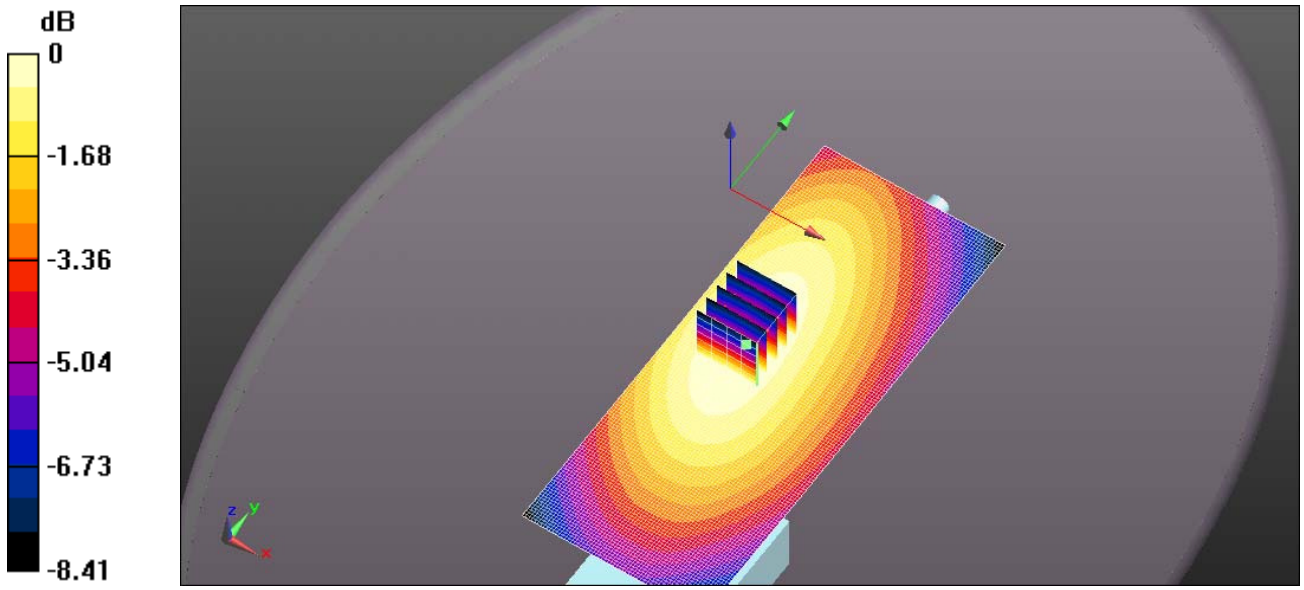

0 dB = 1.14 W/kg = 0.56 dBW/kg

Test Laboratory: Ultratech Group of Labs

FILE NAME: ICOM-435Q BP-284 FA-S81V 143MHz.da52:0

DUT: IC-F3400DT; Type: UHF Transceiver; Serial: 01000151

Communication System: UID 0, CW (0); Frequency: 143 MHz; Duty Cycle: 1:1
Medium parameters used (interpolated): f = 143 MHz; σ = 0.756 S/m; ε_r = 50.877; ρ = 1000 kg/m^3 ;
Phantom section: Flat Section ; Measurement Standard: DASY5 (IEEE/IEC/ANSI C63.19-2007)

DASY Configuration:

- Probe: ES3DV3 - SN3250; ConvF(7.57, 7.57, 7.57); Calibrated: 3/22/2016;
- Sensor-Surface: 3mm (Mechanical Surface Detection)
- Electronics: DAE4 Sn874; Calibrated: 8/24/2015
- Phantom: ELI 4.0; Type: QD OVA 001 BB; Serial: 1057
- DASY52 52.8.8(1222); SEMCAD X 14.6.10(7331)

Configuration_Head_IC-F3400DT/Head Front, P=5W, d=25mm/Area Scan (61x151x1):

Interpolated grid: dx=1.500 mm, dy=1.500 mm

Maximum value of SAR (interpolated) = 3.13 W/kg

Configuration_Head_IC-F3400DT/Head Front, P=5W, d=25mm/Zoom Scan (5x5x7) (5x5x7)/Cube 0:

Measurement grid: dx=7.5mm, dy=7.5mm, dz=5mm
Reference Value = 59.29 V/m; Power Drift = -0.20 dB
Peak SAR (extrapolated) = 3.98 W/kg
SAR(1 g) = 2.83 W/kg; SAR(10 g) = 2.18 W/kg (SAR corrected for target medium)
Maximum value of SAR (measured) = 3.13 W/kg

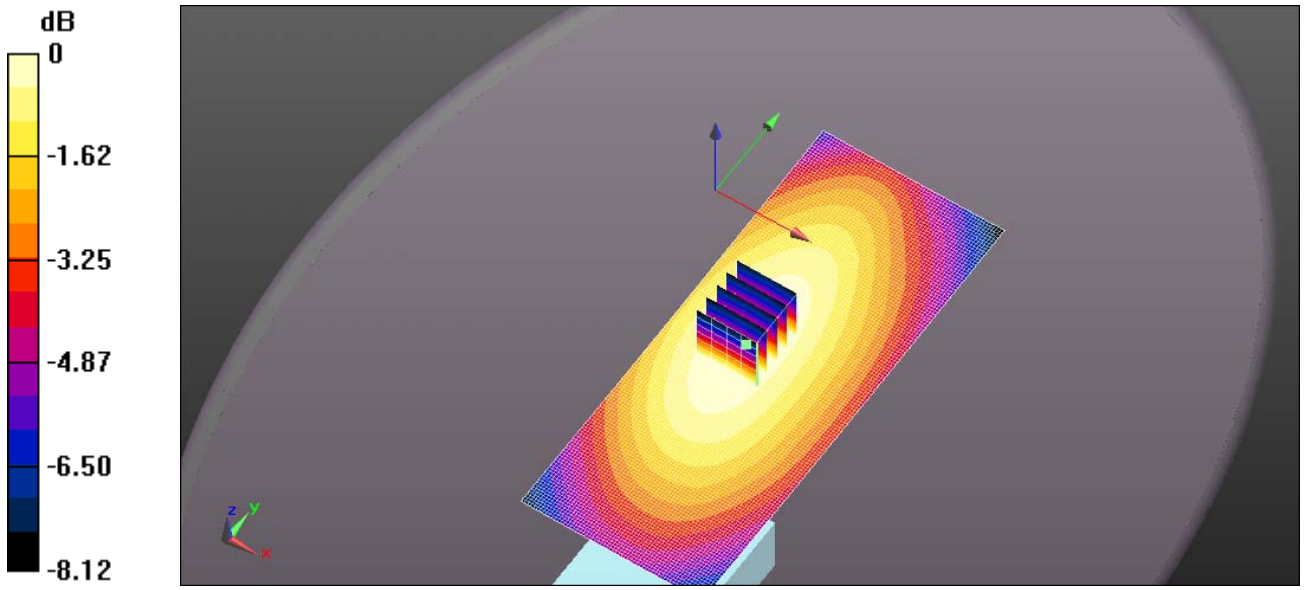

0 dB = 3.13 W/kg = 4.95 dBW/kg

Test Laboratory: Ultratech Group of Labs

FILE NAME: ICOM-435Q BP-284 FA-S81V 150MHz.da52:0

DUT: IC-F3400DT; Type: UHF Transceiver; Serial: 01000151

Communication System: UID 0, CW (0); Frequency: 150 MHz; Duty Cycle: 1:1
Medium parameters used: f = 150 MHz; σ = 0.762 S/m; ε_r = 50.524; ρ = 1000 kg/m^3 ; Phantom section: Flat Section ; Measurement Standard: DASY5 (IEEE/IEC/ANSI C63.19-2007)

DASY Configuration:

- Probe: ES3DV3 - SN3250; ConvF(7.57, 7.57, 7.57); Calibrated: 3/22/2016;
- Sensor-Surface: 3mm (Mechanical Surface Detection)
- Electronics: DAE4 Sn874; Calibrated: 8/24/2015
- Phantom: ELI 4.0; Type: QD OVA 001 BB; Serial: 1057
- DASY52 52.8.8(1222); SEMCAD X 14.6.10(7331)

Configuration_Head_IC-F3400DT/Head Front, P=5W, d=25mm/Area Scan (61x151x1):

Interpolated grid: dx=1.500 mm, dy=1.500 mm
Maximum value of SAR (interpolated) = 0.664 W/kg

Configuration_Head_IC-F3400DT/Head Front, P=5W, d=25mm/Zoom Scan (5x5x7) (5x5x7)/Cube 0:

Measurement grid: dx=7.5mm, dy=7.5mm, dz=5mm
Reference Value = 25.87 V/m; Power Drift = -0.14 dB
Peak SAR (extrapolated) = 0.847 W/kg
SAR(1 g) = 0.596 W/kg; SAR(10 g) = 0.458 W/kg (SAR corrected for target medium)
Maximum value of SAR (measured) = 0.667 W/kg

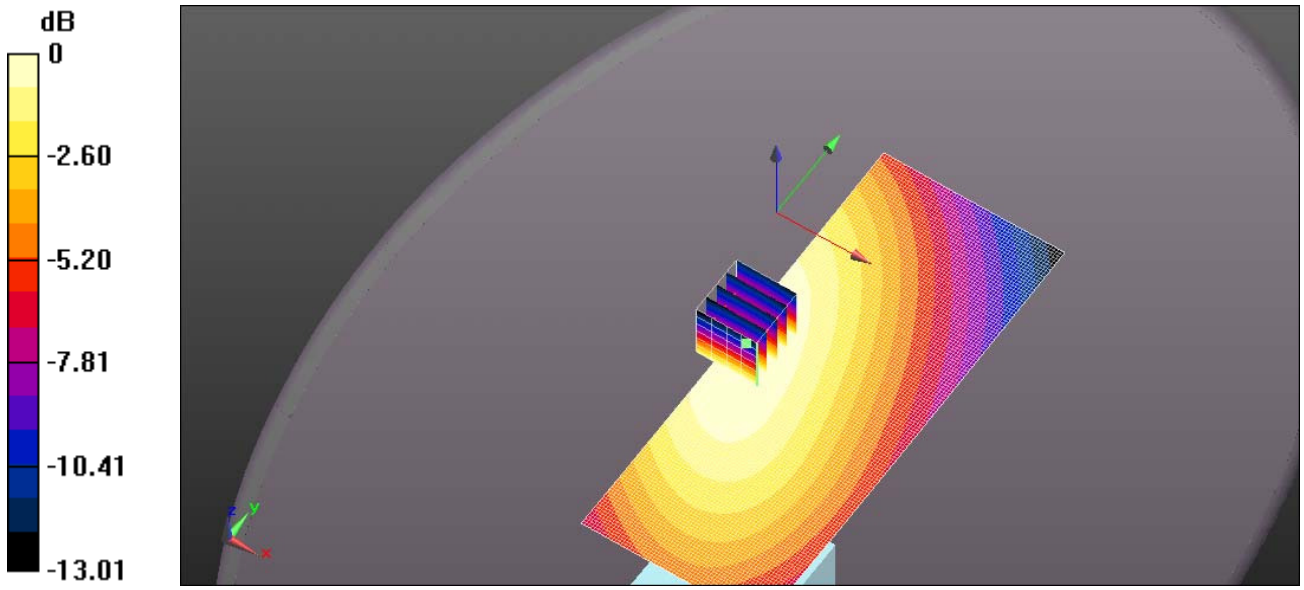

0 dB = 0.664 W/kg = -1.78 dBW/kg

Test Laboratory: Ultratech Group of Labs

FILE NAME: ICOM-435Q BP-284 FA-S82V 150MHz.da52:0

DUT: IC-F3400DT; Type: UHF Transceiver; Serial: 01000151

Communication System: UID 0, CW (0); Frequency: 150 MHz; Duty Cycle: 1:1
Medium parameters used: f = 150 MHz; σ = 0.762 S/m; ε_r = 50.524; ρ = 1000 kg/m^3 ; Phantom section: Flat Section ; Measurement Standard: DASY5 (IEEE/IEC/ANSI C63.19-2007)

DASY Configuration:

- Probe: ES3DV3 - SN3250; ConvF(7.57, 7.57, 7.57); Calibrated: 3/22/2016;
- Sensor-Surface: 3mm (Mechanical Surface Detection)
- Electronics: DAE4 Sn874; Calibrated: 8/24/2015
- Phantom: ELI 4.0; Type: QD OVA 001 BB; Serial: 1057
- DASY52 52.8.8(1222); SEMCAD X 14.6.10(7331)

Configuration_Head_IC-F3400DT/Head Front, P=5W, d=25mm/Area Scan (61x151x1):

Interpolated grid: dx=1.500 mm, dy=1.500 mm
Maximum value of SAR (interpolated) = 1.90 W/kg

Configuration_Head_IC-F3400DT/Head Front, P=5W, d=25mm/Zoom Scan (5x5x7) (5x5x7)/Cube 0:

Measurement grid: dx=7.5mm, dy=7.5mm, dz=5mm
Reference Value = 46.88 V/m; Power Drift = -0.25 dB
Peak SAR (extrapolated) = 2.41 W/kg
SAR(1 g) = 1.7 W/kg; SAR(10 g) = 1.31 W/kg (SAR corrected for target medium)
Maximum value of SAR (measured) = 1.90 W/kg

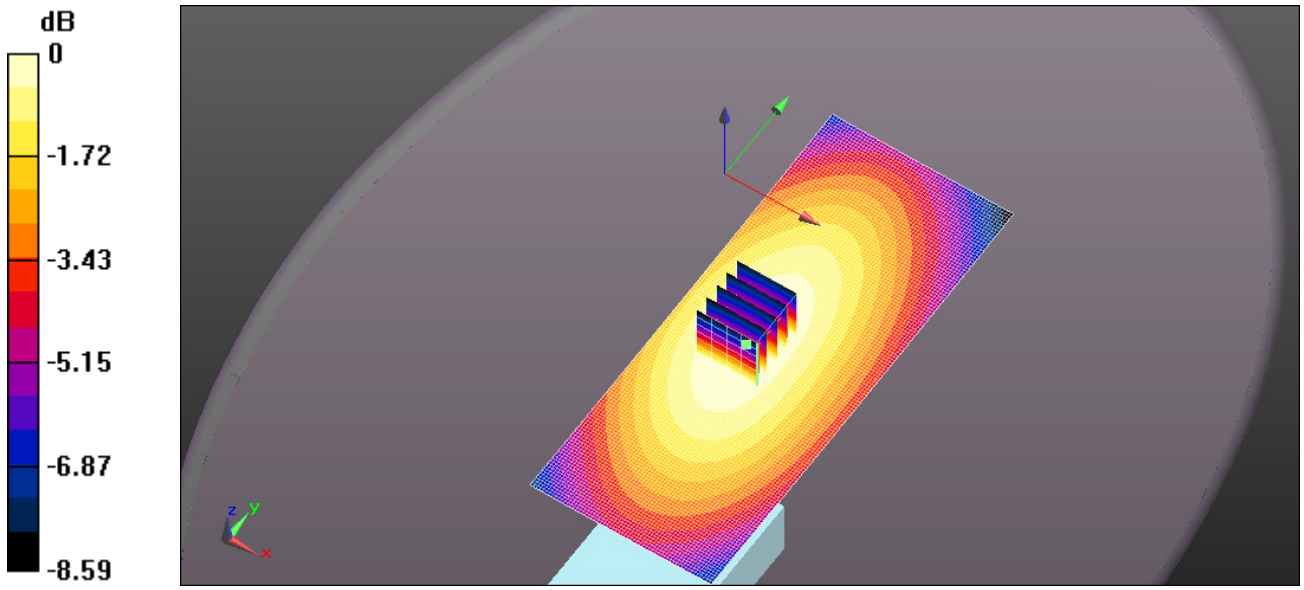

0 dB = 1.90 W/kg = 2.80 dBW/kg

Test Laboratory: Ultratech Group of Labs

FILE NAME: ICOM-435Q BP-284 FA-S82V 156MHZ.DA52:0

DUT: IC-F3400DT; Type: UHF Transceiver; Serial: 01000151

Communication System: UID 0, CW (0); Frequency: 156 MHz; Duty Cycle: 1:1
Medium parameters used: f = 156 MHz; σ = 0.769 S/m; ε_r = 50.103; ρ = 1000 kg/m^3 ; Phantom section: Flat Section ; Measurement Standard: DASY5 (IEEE/IEC/ANSI C63.19-2007)

DASY Configuration:

- Probe: ES3DV3 - SN3250; ConvF(7.57, 7.57, 7.57); Calibrated: 3/22/2016;
- Sensor-Surface: 3mm (Mechanical Surface Detection)
- Electronics: DAE4 Sn874; Calibrated: 8/24/2015
- Phantom: ELI 4.0; Type: QD OVA 001 BB; Serial: 1057
- DASY52 52.8.8(1222); SEMCAD X 14.6.10(7331)

Configuration_Head_IC-F3400DT/Head Front, P=5W, d=25mm/Area Scan (61x151x1):

Interpolated grid: dx=1.500 mm, dy=1.500 mm
Maximum value of SAR (interpolated) = 2.62 W/kg

Configuration_Head_IC-F3400DT/Head Front, P=5W, d=25mm/Zoom Scan (5x5x7) (5x5x7)/Cube 0:

Measurement grid: dx=7.5mm, dy=7.5mm, dz=5mm
Reference Value = 52.72 V/m; Power Drift = -0.28 dB
Peak SAR (extrapolated) = 3.32 W/kg
SAR(1 g) = 2.35 W/kg; SAR(10 g) = 1.79 W/kg (SAR corrected for target medium)
Maximum value of SAR (measured) = 2.61 W/kg

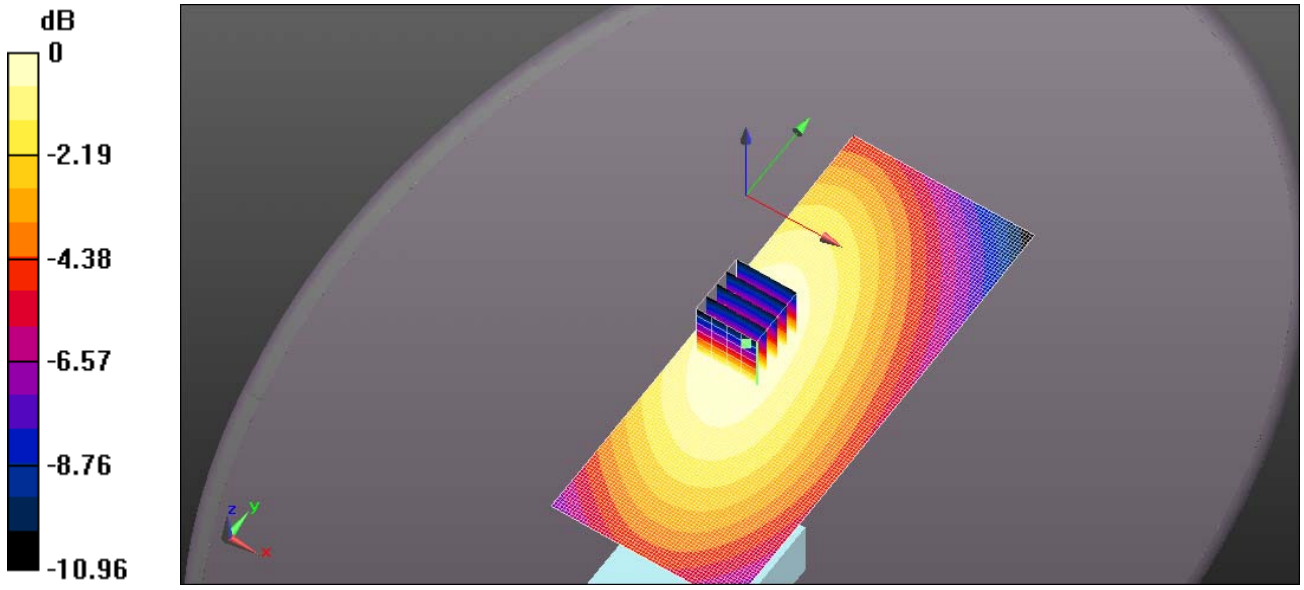

0 dB = 2.62 W/kg = 4.18 dBW/kg

Test Laboratory: Ultratech Group of Labs

FILE NAME: ICOM-435Q BP-284 FA-S82V 162MHz.da52:0

DUT: IC-F3400DT; Type: UHF Transceiver; Serial: 01000151

Communication System: UID 0, CW (0); Frequency: 162 MHz; Duty Cycle: 1:1
Medium parameters used: f = 162 MHz; σ = 0.771 S/m; ε_r = 50.035; ρ = 1000 kg/m^3 ; Phantom section: Flat Section ; Measurement Standard: DASY5 (IEEE/IEC/ANSI C63.19-2007)

DASY Configuration:

- Probe: ES3DV3 - SN3250; ConvF(7.57, 7.57, 7.57); Calibrated: 3/22/2016;
- Sensor-Surface: 3mm (Mechanical Surface Detection)
- Electronics: DAE4 Sn874; Calibrated: 8/24/2015
- Phantom: ELI 4.0; Type: QD OVA 001 BB; Serial: 1057
- DASY52 52.8.8(1222); SEMCAD X 14.6.10(7331)

Configuration_Head_IC-F3400DT/Head Front, P=5W, d=25mm/Area Scan (61x151x1):

Interpolated grid: dx=1.500 mm, dy=1.500 mm
Maximum value of SAR (interpolated) = 0.933 W/kg

Configuration_Head_IC-F3400DT/Head Front, P=5W, d=25mm/Zoom Scan (5x5x7) (5x5x7)/Cube 0:

Measurement grid: dx=7.5mm, dy=7.5mm, dz=5mm
Reference Value = 15.09 V/m; Power Drift = -0.05 dB
Peak SAR (extrapolated) = 1.19 W/kg
SAR(1 g) = 0.837 W/kg; SAR(10 g) = 0.634 W/kg (SAR corrected for target medium)
Maximum value of SAR (measured) = 0.932 W/kg

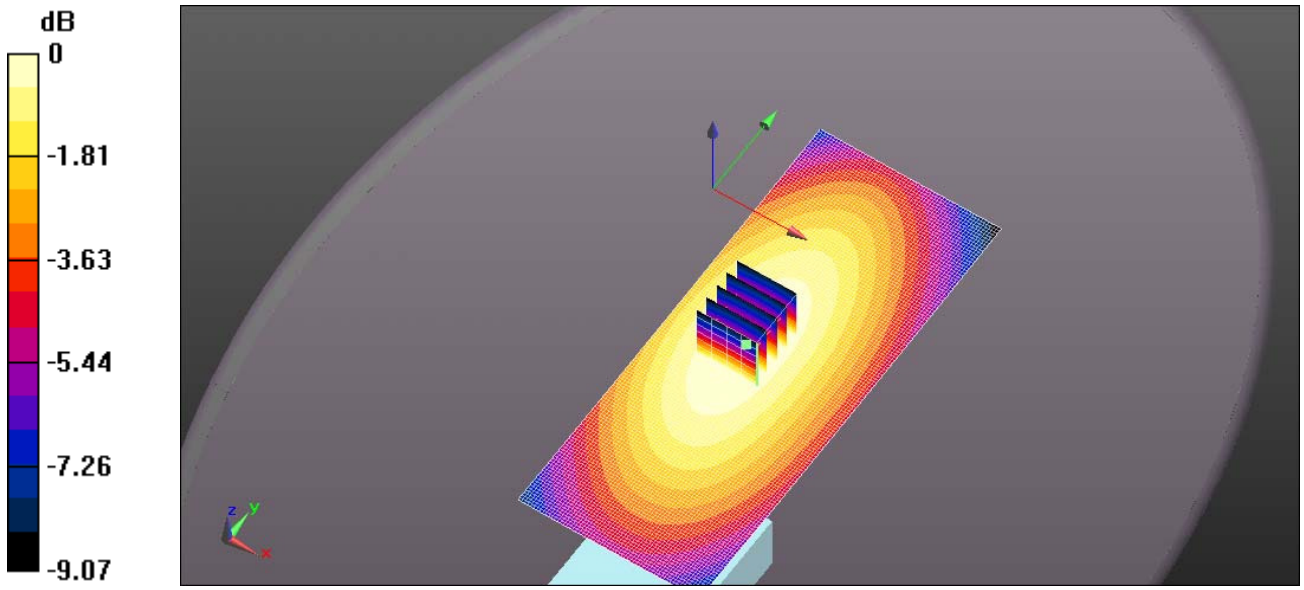

0 dB = 0.933 W/kg = -0.30 dBW/kg

Test Laboratory: Ultratech Group of Labs

FILE NAME: ICOM-435Q BP-284 FA-S83V 160MHz.da52:0

DUT: IC-F3400DT; Type: UHF Transceiver; Serial: 01000151

Communication System: UID 0, CW (0); Frequency: 160 MHz; Duty Cycle: 1:1
Medium parameters used: f = 160 MHz; σ = 0.77 S/m; ε_r = 50.248; ρ = 1000 kg/m^3 ; Phantom section: Flat Section ; Measurement Standard: DASY5 (IEEE/IEC/ANSI C63.19-2007)

DASY Configuration:

- Probe: ES3DV3 - SN3250; ConvF(7.57, 7.57, 7.57); Calibrated: 3/22/2016;
- Sensor-Surface: 3mm (Mechanical Surface Detection)
- Electronics: DAE4 Sn874; Calibrated: 8/24/2015
- Phantom: ELI 4.0; Type: QD OVA 001 BB; Serial: 1057
- DASY52 52.8.8(1222); SEMCAD X 14.6.10(7331)

Configuration_Head_IC-F3400DT/Head Front, P=5W, d=25mm/Area Scan (61x151x1):

Interpolated grid: dx=1.500 mm, dy=1.500 mm
Maximum value of SAR (interpolated) = 1.31 W/kg

Configuration_Head_IC-F3400DT/Head Front, P=5W, d=25mm/Zoom Scan (5x5x7) (5x5x7)/Cube 0:

Measurement grid: dx=7.5mm, dy=7.5mm, dz=5mm
Reference Value = 19.23 V/m; Power Drift = -0.04 dB
Peak SAR (extrapolated) = 1.67 W/kg
SAR(1 g) = 1.18 W/kg; SAR(10 g) = 0.893 W/kg (SAR corrected for target medium)
Maximum value of SAR (measured) = 1.31 W/kg

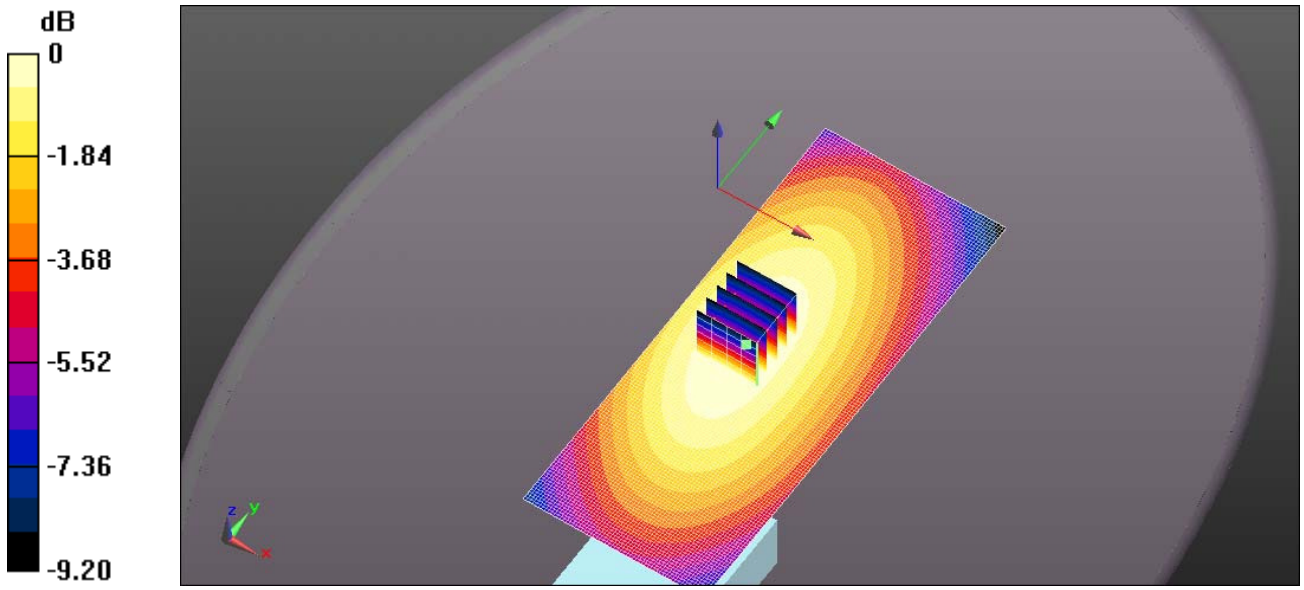

0 dB = 1.31 W/kg = 1.18 dBW/kg

Test Laboratory: Ultratech Group of Labs

FILE NAME: ICOM-435Q BP-284 FA-S83V 167MHz.da52:0

DUT: IC-F3400DT; Type: UHF Transceiver; Serial: 01000151

Communication System: UID 0, CW (0); Frequency: 167 MHz; Duty Cycle: 1:1
Medium parameters used (interpolated): f = 167 MHz; σ = 0.774 S/m; ε_r = 49.746; ρ = 1000 kg/m^3 ;
Phantom section: Flat Section ; Measurement Standard: DASY5 (IEEE/IEC/ANSI C63.19-2007)

DASY Configuration:

- Probe: ES3DV3 - SN3250; ConvF(7.57, 7.57, 7.57); Calibrated: 3/22/2016;
- Sensor-Surface: 3mm (Mechanical Surface Detection)
- Electronics: DAE4 Sn874; Calibrated: 8/24/2015
- Phantom: ELI 4.0; Type: QD OVA 001 BB; Serial: 1057
- DASY52 52.8.8(1222); SEMCAD X 14.6.10(7331)

Configuration_Head_IC-F3400DT/Head Front, P=5W, d=25mm/Area Scan (61x151x1):

Interpolated grid: dx=1.500 mm, dy=1.500 mm

Maximum value of SAR (interpolated) = 0.515 W/kg

Configuration_Head_IC-F3400DT/Head Front, P=5W, d=25mm/Zoom Scan (5x5x7) (5x5x7)/Cube 0:

Measurement grid: dx=7.5mm, dy=7.5mm, dz=5mm
Reference Value = 12.39 V/m; Power Drift = -0.01 dB
Peak SAR (extrapolated) = 0.658 W/kg
SAR(1 g) = 0.463 W/kg; SAR(10 g) = 0.351 W/kg (SAR corrected for target medium)
Maximum value of SAR (measured) = 0.516 W/kg

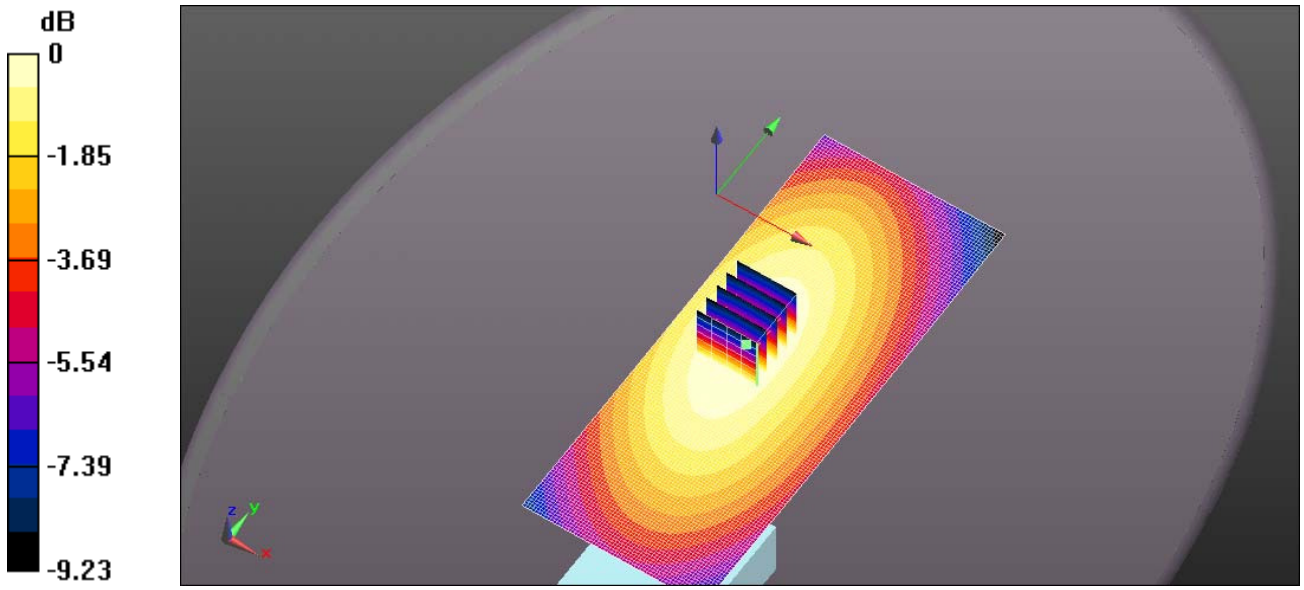

0 dB = 0.515 W/kg = -2.89 dBW/kg

Test Laboratory: Ultratech Group of Labs

FILE NAME: ICOM-435Q BP-284 FA-S83V 174MHZ.DA52:0

DUT: IC-F3400DT; Type: UHF Transceiver; Serial: 01000151

Communication System: UID 0, CW (0); Frequency: 174 MHz; Duty Cycle: 1:1
Medium parameters used: f = 174 MHz; σ = 0.781 S/m; ε_r = 49.537; ρ = 1000 kg/m^3 ; Phantom section: Flat Section ; Measurement Standard: DASY5 (IEEE/IEC/ANSI C63.19-2007)

DASY Configuration:

- Probe: ES3DV3 - SN3250; ConvF(7.57, 7.57, 7.57); Calibrated: 3/22/2016;
- Sensor-Surface: 3mm (Mechanical Surface Detection)
- Electronics: DAE4 Sn874; Calibrated: 8/24/2015
- Phantom: ELI 4.0; Type: QD OVA 001 BB; Serial: 1057
- DASY52 52.8.8(1222); SEMCAD X 14.6.10(7331)

Configuration_Head_IC-F3400DT/Head Front, P=5W, d=25mm/Area Scan (61x151x1):

Interpolated grid: dx=1.500 mm, dy=1.500 mm
Maximum value of SAR (interpolated) = 0.301 W/kg

Configuration_Head_IC-F3400DT/Head Front, P=5W, d=25mm/Zoom Scan (5x5x7) (5x5x7)/Cube 0:

Measurement grid: dx=7.5mm, dy=7.5mm, dz=5mm
Reference Value = 6.611 V/m; Power Drift = 0.02 dB
Peak SAR (extrapolated) = 0.214 W/kg
SAR(1 g) = 0.150 W/kg; SAR(10 g) = 0.113 W/kg (SAR corrected for target medium)
Maximum value of SAR (measured) = 0.166 W/kg

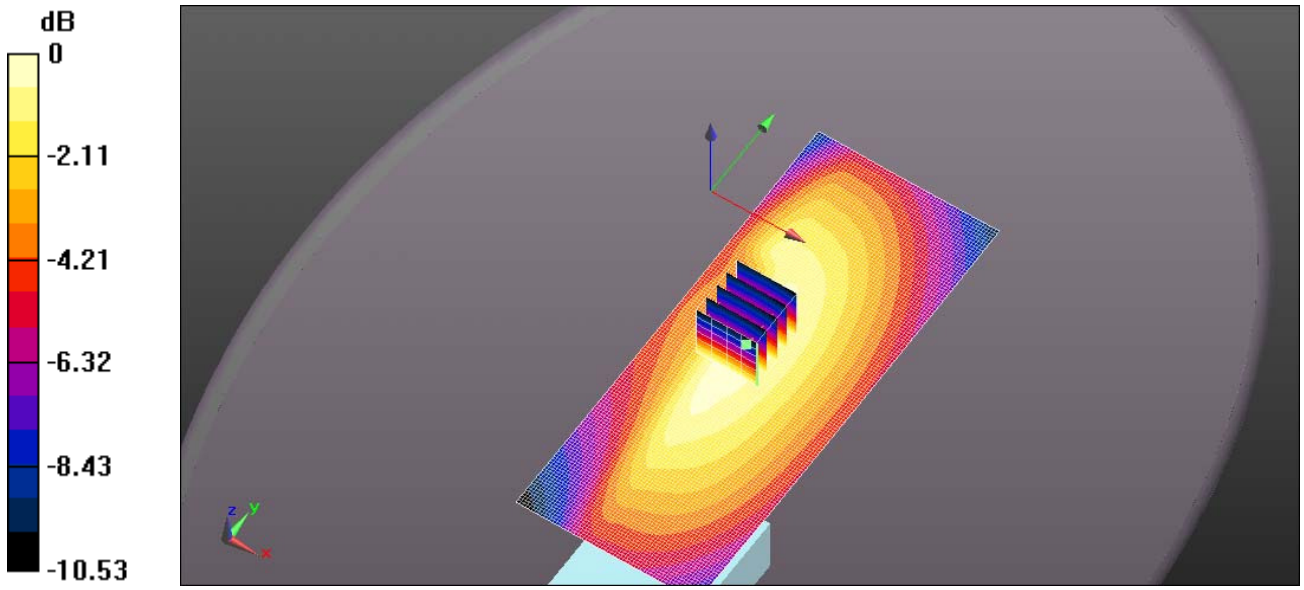

0 dB = 0.301 W/kg = -5.21 dBW/kg

Test Laboratory: Ultratech Group of Labs

FILE NAME: ICOM-435Q BP-284 FA-S81VS 136MHz.da52:0

DUT: IC-F3400DT; Type: UHF Transceiver; Serial: 01000151

Communication System: UID 0, CW (0); Frequency: 136 MHz; Duty Cycle: 1:1
Medium parameters used: f = 136 MHz; σ = 0.749 S/m; ε_r = 51.345; ρ = 1000 kg/m^3 ; Phantom section: Flat Section ; Measurement Standard: DASY5 (IEEE/IEC/ANSI C63.19-2007)

DASY Configuration:

- Probe: ES3DV3 - SN3250; ConvF(7.57, 7.57, 7.57); Calibrated: 3/22/2016;
- Sensor-Surface: 3mm (Mechanical Surface Detection)
- Electronics: DAE4 Sn874; Calibrated: 8/24/2015
- Phantom: ELI 4.0; Type: QD OVA 001 BB; Serial: 1057
- DASY52 52.8.8(1222); SEMCAD X 14.6.10(7331)

Configuration_Head_IC-F3400DT/Head Front, P=5W, d=25mm/Area Scan (61x151x1):

Interpolated grid: dx=1.500 mm, dy=1.500 mm
Maximum value of SAR (interpolated) = 0.189 W/kg

Configuration_Head_IC-F3400DT/Head Front, P=5W, d=25mm/Zoom Scan (5x5x7) (6x6x7)/Cube 0:

Measurement grid: dx=7.5mm, dy=7.5mm, dz=5mm
Reference Value = 1.202 V/m; Power Drift = 0.17 dB
Peak SAR (extrapolated) = 0.272 W/kg
SAR(1 g) = 0.166 W/kg; SAR(10 g) = 0.120 W/kg (SAR corrected for target medium)
Maximum value of SAR (measured) = 0.189 W/kg

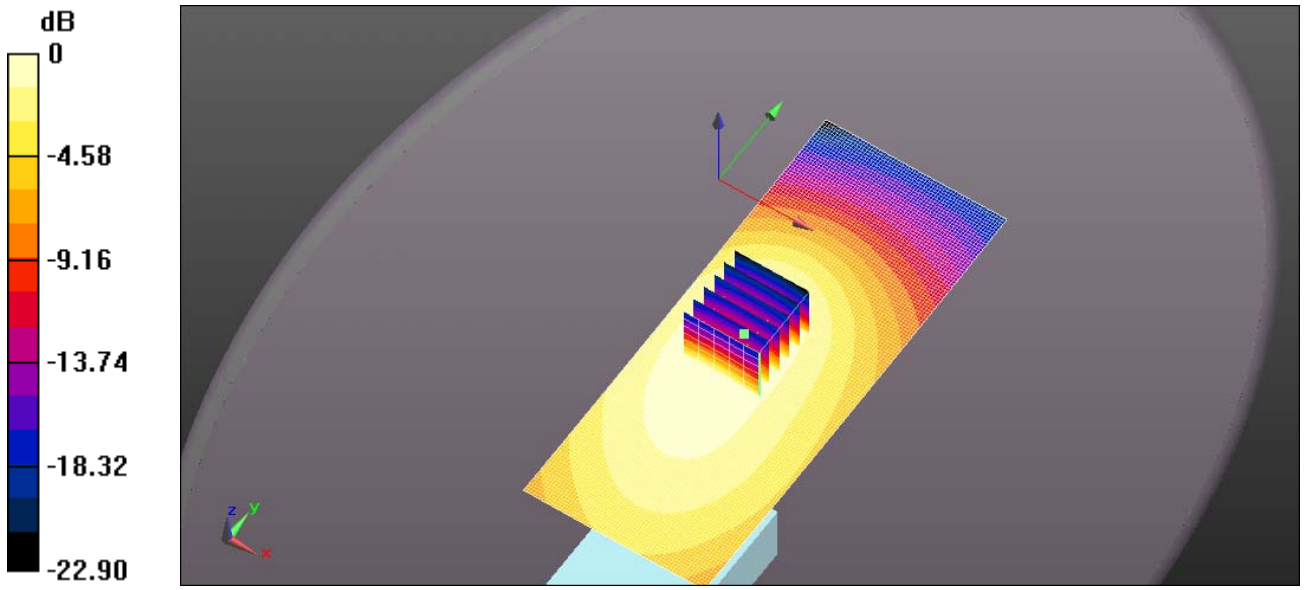

0 dB = 0.189 W/kg = -7.23 dBW/kg

Test Laboratory: Ultratech Group of Labs

FILE NAME: ICOM-435Q BP-284 FA-S81VS 143MHz.da52:0

DUT: IC-F3400DT; Type: UHF Transceiver; Serial: 01000151

Communication System: UID 0, CW (0); Frequency: 143 MHz; Duty Cycle: 1:1
Medium parameters used (interpolated): f = 143 MHz; σ = 0.756 S/m; ε_r = 50.877; ρ = 1000 kg/m^3 ;
Phantom section: Flat Section ; Measurement Standard: DASY5 (IEEE/IEC/ANSI C63.19-2007)

DASY Configuration:

- Probe: ES3DV3 - SN3250; ConvF(7.57, 7.57, 7.57); Calibrated: 3/22/2016;
- Sensor-Surface: 3mm (Mechanical Surface Detection)
- Electronics: DAE4 Sn874; Calibrated: 8/24/2015
- Phantom: ELI 4.0; Type: QD OVA 001 BB; Serial: 1057
- DASY52 52.8.8(1222); SEMCAD X 14.6.10(7331)

Configuration_Head_IC-F3400DT/Head Front, P=5W, d=25mm/Area Scan (61x151x1):

Interpolated grid: dx=1.500 mm, dy=1.500 mm

Maximum value of SAR (interpolated) = 2.80 W/kg

Configuration_Head_IC-F3400DT/Head Front, P=5W, d=25mm/Zoom Scan (5x5x7) (6x6x7)/Cube 0:

Measurement grid: dx=7.5mm, dy=7.5mm, dz=5mm
Reference Value = 5.708 V/m; Power Drift = 0.11 dB
Peak SAR (extrapolated) = 4.09 W/kg
SAR(1 g) = 2.44 W/kg; SAR(10 g) = 1.74 W/kg (SAR corrected for target medium)
Maximum value of SAR (measured) = 2.79 W/kg

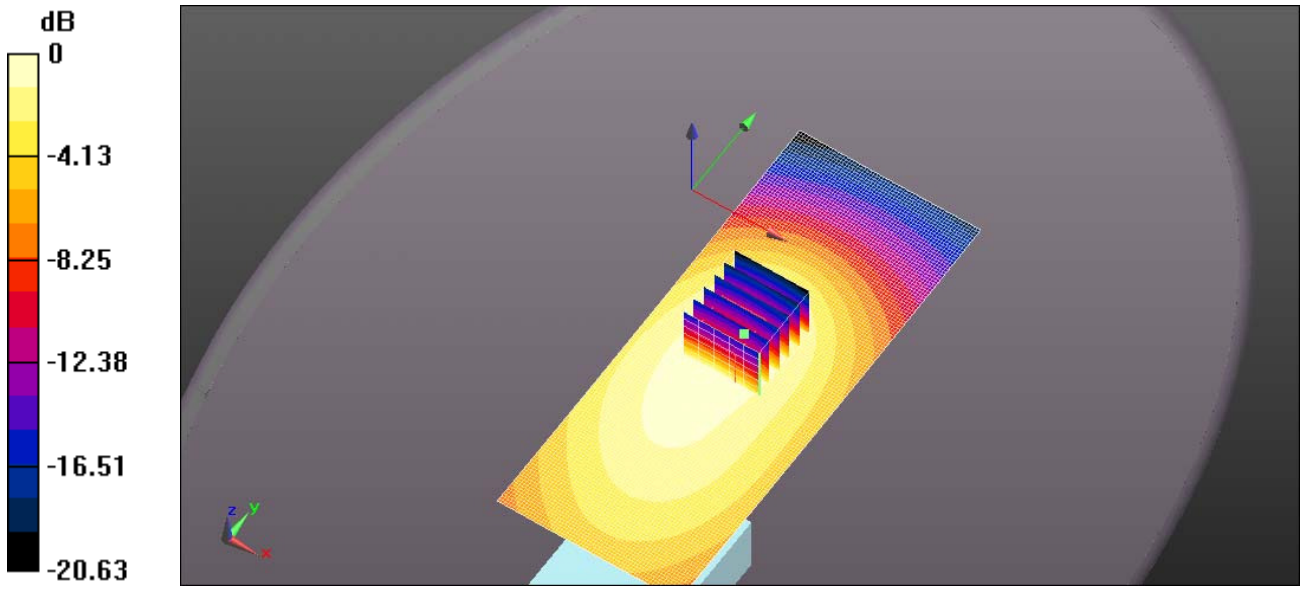

0 dB = 2.80 W/kg = 4.47 dBW/kg

Test Laboratory: Ultratech Group of Labs
FILE NAME: ICOM-435Q BP-284 FA-S81VS 150MHZ.DA52:0

DUT: IC-F3400DT; Type: UHF Transceiver; Serial: 01000151

Communication System: UID 0, CW (0); Frequency: 150 MHz; Duty Cycle: 1:1
Medium parameters used: f = 150 MHz; σ = 0.762 S/m; ε_r = 50.524; ρ = 1000 kg/m^3 ; Phantom section: Flat Section ; Measurement Standard: DASY5 (IEEE/IEC/ANSI C63.19-2007)

DASY Configuration:

- Probe: ES3DV3 - SN3250; ConvF(7.57, 7.57, 7.57); Calibrated: 3/22/2016;
- Sensor-Surface: 3mm (Mechanical Surface Detection)
- Electronics: DAE4 Sn874; Calibrated: 8/24/2015
- Phantom: ELI 4.0; Type: QD OVA 001 BB; Serial: 1057
- DASY52 52.8.8(1222); SEMCAD X 14.6.10(7331)

Configuration_Head_IC-F3400DT/Head Front, P=5W, d=25mm/Area Scan (61x151x1):
Interpolated grid: dx=1.500 mm, dy=1.500 mm
Maximum value of SAR (interpolated) = 0.310 W/kg

Configuration_Head_IC-F3400DT/Head Front, P=5W, d=25mm/Zoom Scan (5x5x7) (5x6x7)/Cube 0:
Measurement grid: dx=7.5mm, dy=7.5mm, dz=5mm
Reference Value = 1.927 V/m; Power Drift = 0.04 dB
Peak SAR (extrapolated) = 0.440 W/kg
SAR(1 g) = 0.275 W/kg; SAR(10 g) = 0.201 W/kg (SAR corrected for target medium)
Maximum value of SAR (measured) = 0.314 W/kg

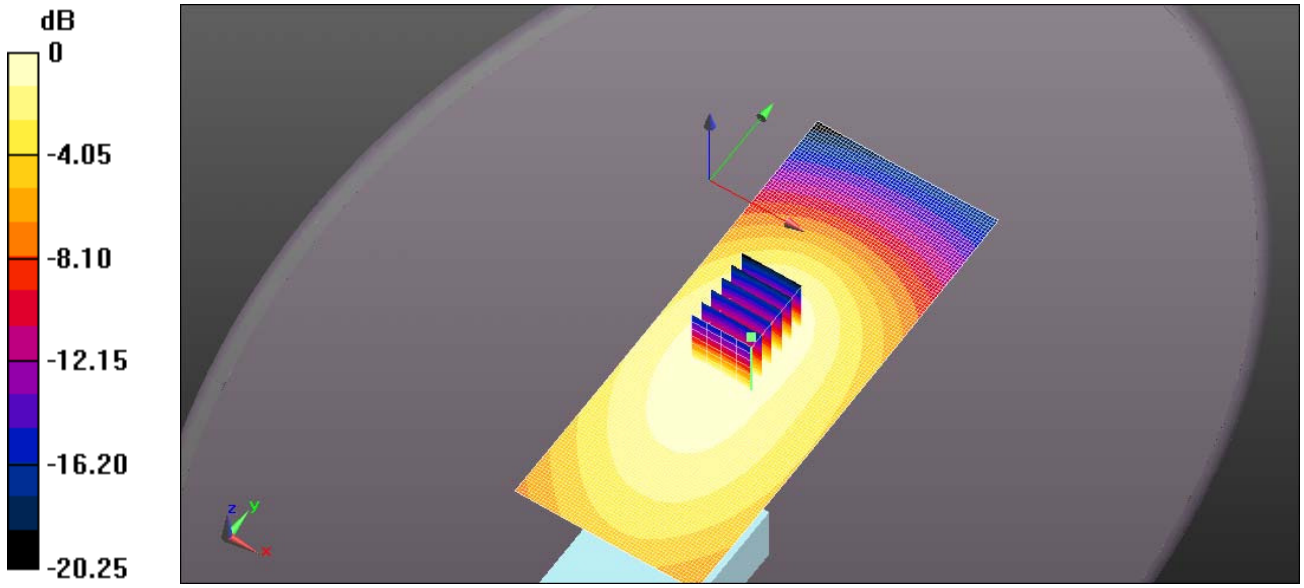

0 dB = 0.310 W/kg = -5.08 dBW/kg

Test Laboratory: Ultratech Group of Labs

FILE NAME: ICOM-435Q BP-284 FA-S82VS 150MHz.da52:0

DUT: IC-F3400DT; Type: UHF Transceiver; Serial: 01000151

Communication System: UID 0, CW (0); Frequency: 150 MHz; Duty Cycle: 1:1
Medium parameters used: f = 150 MHz; σ = 0.762 S/m; ε_r = 50.524; ρ = 1000 kg/m^3 ; Phantom section: Flat Section ; Measurement Standard: DASY5 (IEEE/IEC/ANSI C63.19-2007)

DASY Configuration:

- Probe: ES3DV3 - SN3250; ConvF(7.57, 7.57, 7.57); Calibrated: 3/22/2016;
- Sensor-Surface: 3mm (Mechanical Surface Detection)
- Electronics: DAE4 Sn874; Calibrated: 8/24/2015
- Phantom: ELI 4.0; Type: QD OVA 001 BB; Serial: 1057
- DASY52 52.8.8(1222); SEMCAD X 14.6.10(7331)

Configuration_Head_IC-F3400DT/Head Front, P=5W, d=25mm/Area Scan (61x151x1):

Interpolated grid: dx=1.500 mm, dy=1.500 mm
Maximum value of SAR (interpolated) = 0.654 W/kg

Configuration_Head_IC-F3400DT/Head Front, P=5W, d=25mm/Zoom Scan (5x5x7) (6x7x7)/Cube 0:

Measurement grid: dx=7.5mm, dy=7.5mm, dz=5mm
Reference Value = 2.570 V/m; Power Drift = 0.25 dB
Peak SAR (extrapolated) = 0.911 W/kg
SAR(1 g) = 0.570 W/kg; SAR(10 g) = 0.420 W/kg (SAR corrected for target medium)
Maximum value of SAR (measured) = 0.652 W/kg

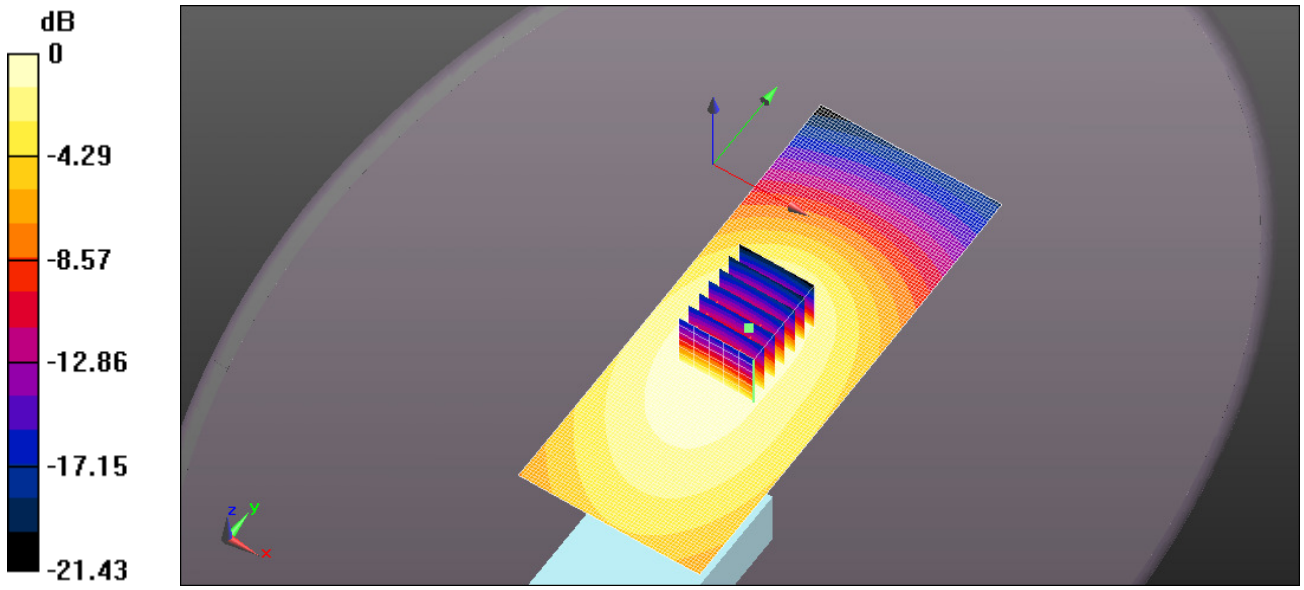

0 dB = 0.654 W/kg = -1.84 dBW/kg

Test Laboratory: Ultratech Group of Labs

FILE NAME: ICOM-435Q BP-284 FA-S82VS 156MHz.da52:0

DUT: IC-F3400DT; Type: UHF Transceiver; Serial: 01000151

Communication System: UID 0, CW (0); Frequency: 156 MHz; Duty Cycle: 1:1
Medium parameters used: f = 156 MHz; σ = 0.769 S/m; ε_r = 50.103; ρ = 1000 kg/m^3 ; Phantom section: Flat Section ; Measurement Standard: DASY5 (IEEE/IEC/ANSI C63.19-2007)

DASY Configuration:

- Probe: ES3DV3 - SN3250; ConvF(7.57, 7.57, 7.57); Calibrated: 3/22/2016;
- Sensor-Surface: 3mm (Mechanical Surface Detection)
- Electronics: DAE4 Sn874; Calibrated: 8/24/2015
- Phantom: ELI 4.0; Type: QD OVA 001 BB; Serial: 1057
- DASY52 52.8.8(1222); SEMCAD X 14.6.10(7331)

Configuration_Head_IC-F3400DT/Head Front, P=5W, d=25mm/Area Scan (61x151x1):

Interpolated grid: dx=1.500 mm, dy=1.500 mm
Maximum value of SAR (interpolated) = 1.08 W/kg

Configuration_Head_IC-F3400DT/Head Front, P=5W, d=25mm/Zoom Scan (5x5x7) (6x7x7)/Cube 0:

Measurement grid: dx=7.5mm, dy=7.5mm, dz=5mm
Reference Value = 3.841 V/m; Power Drift = 0.24 dB
Peak SAR (extrapolated) = 1.55 W/kg
SAR(1 g) = 0.984 W/kg; SAR(10 g) = 0.729 W/kg (SAR corrected for target medium)
Maximum value of SAR (measured) = 1.11 W/kg

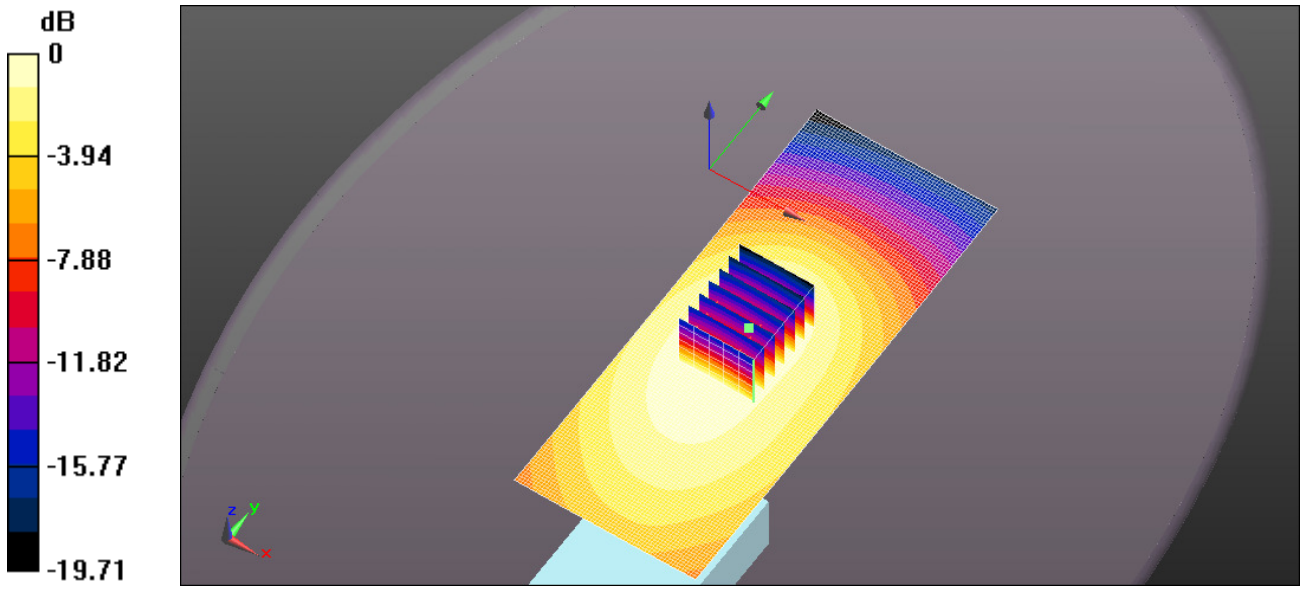

0 dB = 1.08 W/kg = 0.34 dBW/kg

Test Laboratory: Ultratech Group of Labs

FILE NAME: ICOM-435Q BP-284 FA-S82VS 162MHz.da52:0

DUT: IC-F3400DT; Type: UHF Transceiver; Serial: 01000151

Communication System: UID 0, CW (0); Frequency: 162 MHz; Duty Cycle: 1:1
Medium parameters used: f = 162 MHz; σ = 0.771 S/m; ε_r = 50.035; ρ = 1000 kg/m^3 ; Phantom section: Flat Section ; Measurement Standard: DASY5 (IEEE/IEC/ANSI C63.19-2007)

DASY Configuration:

- Probe: ES3DV3 - SN3250; ConvF(7.57, 7.57, 7.57); Calibrated: 3/22/2016;
- Sensor-Surface: 3mm (Mechanical Surface Detection)
- Electronics: DAE4 Sn874; Calibrated: 8/24/2015
- Phantom: ELI 4.0; Type: QD OVA 001 BB; Serial: 1057
- DASY52 52.8.8(1222); SEMCAD X 14.6.10(7331)

Configuration_Head_IC-F3400DT/Head Front, P=5W, d=25mm/Area Scan (61x151x1):

Interpolated grid: dx=1.500 mm, dy=1.500 mm
Maximum value of SAR (interpolated) = 0.230 W/kg

Configuration_Head_IC-F3400DT/Head Front, P=5W, d=25mm/Zoom Scan (5x5x7) (6x7x7)/Cube 0:

Measurement grid: dx=7.5mm, dy=7.5mm, dz=5mm
Reference Value = 1.280 V/m; Power Drift = 0.22 dB
Peak SAR (extrapolated) = 0.317 W/kg
SAR(1 g) = 0.201 W/kg; SAR(10 g) = 0.148 W/kg (SAR corrected for target medium)
Maximum value of SAR (measured) = 0.227 W/kg

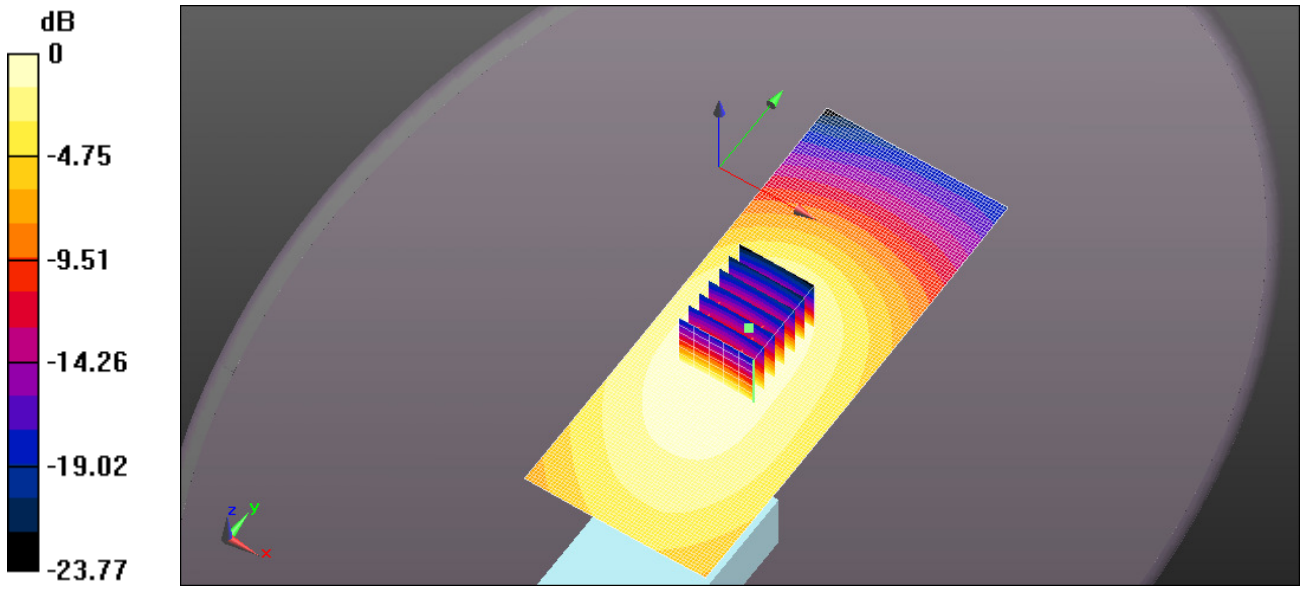

0 dB = 0.230 W/kg = -6.38 dBW/kg

Test Laboratory: Ultratech Group of Labs

FILE NAME: ICOM-435Q BP-284 FA-S83VS 160MHz.da52:0

DUT: IC-F3400DT; Type: UHF Transceiver; Serial: 01000151

Communication System: UID 0, CW (0); Frequency: 160 MHz; Duty Cycle: 1:1
Medium parameters used: f = 160 MHz; σ = 0.77 S/m; ε_r = 50.248; ρ = 1000 kg/m^3 ; Phantom section: Flat Section ; Measurement Standard: DASY5 (IEEE/IEC/ANSI C63.19-2007)

DASY Configuration:

- Probe: ES3DV3 - SN3250; ConvF(7.57, 7.57, 7.57); Calibrated: 3/22/2016;
- Sensor-Surface: 3mm (Mechanical Surface Detection)
- Electronics: DAE4 Sn874; Calibrated: 8/24/2015
- Phantom: ELI 4.0; Type: QD OVA 001 BB; Serial: 1057
- DASY52 52.8.8(1222); SEMCAD X 14.6.10(7331)

Configuration_Head_IC-F3400DT/Head Front, P=5W, d=25mm/Area Scan (61x151x1):

Interpolated grid: dx=1.500 mm, dy=1.500 mm
Maximum value of SAR (interpolated) = 0.356 W/kg

Configuration_Head_IC-F3400DT/Head Front, P=5W, d=25mm/Zoom Scan (5x5x7) (6x7x7)/Cube 0:

Measurement grid: dx=7.5mm, dy=7.5mm, dz=5mm
Reference Value = 1.756 V/m; Power Drift = -0.21 dB
Peak SAR (extrapolated) = 0.493 W/kg
SAR(1 g) = 0.313 W/kg; SAR(10 g) = 0.230 W/kg (SAR corrected for target medium)
Maximum value of SAR (measured) = 0.354 W/kg

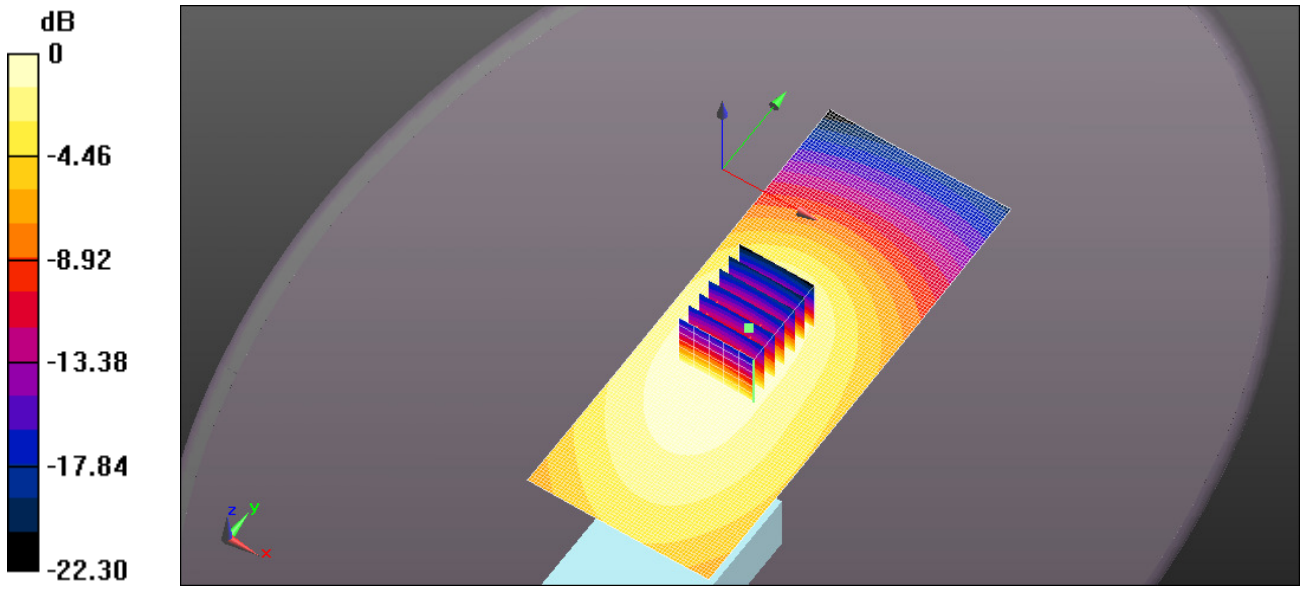

0 dB = 0.356 W/kg = -4.48 dBW/kg

Test Laboratory: Ultratech Group of Labs

FILE NAME: ICOM-435Q BP-284 FA-S83VS 167MHz.da52:0

DUT: IC-F3400DT; Type: UHF Transceiver; Serial: 01000151

Communication System: UID 0, CW (0); Frequency: 167 MHz; Duty Cycle: 1:1
Medium parameters used (interpolated): f = 167 MHz; σ = 0.774 S/m; ε_r = 49.746; ρ = 1000 kg/m^3 ;
Phantom section: Flat Section ; Measurement Standard: DASY5 (IEEE/IEC/ANSI C63.19-2007)

DASY Configuration:

- Probe: ES3DV3 - SN3250; ConvF(7.57, 7.57, 7.57); Calibrated: 3/22/2016;
- Sensor-Surface: 3mm (Mechanical Surface Detection)
- Electronics: DAE4 Sn874; Calibrated: 8/24/2015
- Phantom: ELI 4.0; Type: QD OVA 001 BB; Serial: 1057
- DASY52 52.8.8(1222); SEMCAD X 14.6.10(7331)

Configuration_Head_IC-F3400DT/Head Front, P=5W, d=25mm/Area Scan (61x151x1):

Interpolated grid: dx=1.500 mm, dy=1.500 mm

Maximum value of SAR (interpolated) = 1.74 W/kg

Configuration_Head_IC-F3400DT/Head Front, P=5W, d=25mm/Zoom Scan (5x5x7) (6x6x7)/Cube 0:

Measurement grid: dx=7.5mm, dy=7.5mm, dz=5mm
Reference Value = 3.955 V/m; Power Drift = 0.07 dB
Peak SAR (extrapolated) = 2.44 W/kg
SAR(1 g) = 1.53 W/kg; SAR(10 g) = 1.12 W/kg (SAR corrected for target medium)
Maximum value of SAR (measured) = 1.74 W/kg

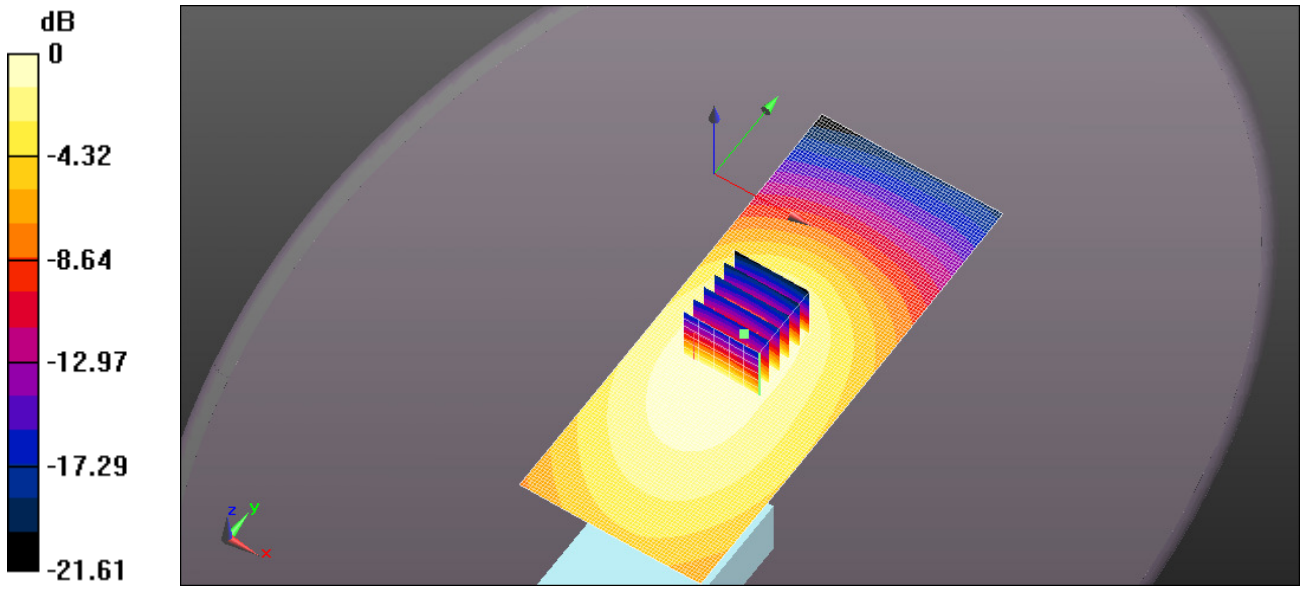

0 dB = 1.74 W/kg = 2.42 dBW/kg

Test Laboratory: Ultratech Group of Labs

FILE NAME: ICOM-435Q BP-284 FA-S83VS 174MHz.da52:0

DUT: IC-F3400DT; Type: UHF Transceiver; Serial: 01000151

Communication System: UID 0, CW (0); Frequency: 174 MHz; Duty Cycle: 1:1
Medium parameters used: f = 174 MHz; σ = 0.781 S/m; ε_r = 49.537; ρ = 1000 kg/m^3 ; Phantom section: Flat Section ; Measurement Standard: DASY5 (IEEE/IEC/ANSI C63.19-2007)

DASY Configuration:

- Probe: ES3DV3 - SN3250; ConvF(7.57, 7.57, 7.57); Calibrated: 3/22/2016;
- Sensor-Surface: 3mm (Mechanical Surface Detection)
- Electronics: DAE4 Sn874; Calibrated: 8/24/2015
- Phantom: ELI 4.0; Type: QD OVA 001 BB; Serial: 1057
- DASY52 52.8.8(1222); SEMCAD X 14.6.10(7331)

Configuration_Head_IC-F3400DT/Head Front, P=5W, d=25mm/Area Scan (61x151x1):

Interpolated grid: dx=1.500 mm, dy=1.500 mm
Maximum value of SAR (interpolated) = 0.470 W/kg

Configuration_Head_IC-F3400DT/Head Front, P=5W, d=25mm/Zoom Scan (5x5x7) (6x6x7)/Cube 0:

Measurement grid: dx=7.5mm, dy=7.5mm, dz=5mm
Reference Value = 2.246 V/m; Power Drift = -0.31 dB
Peak SAR (extrapolated) = 0.668 W/kg
SAR(1 g) = 0.423 W/kg; SAR(10 g) = 0.307 W/kg (SAR corrected for target medium)
Maximum value of SAR (measured) = 0.466 W/kg

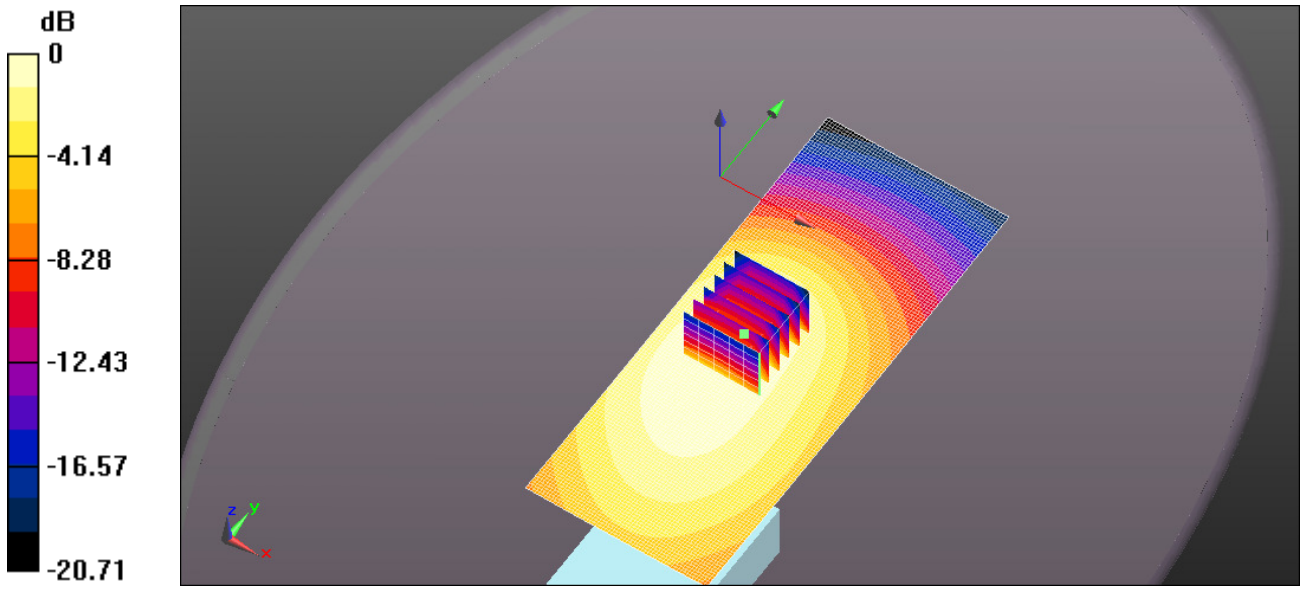

0 dB = 0.470 W/kg = -3.28 dBW/kg

Test Laboratory: Ultratech Group of Labs

FILE NAME: ICOM-435Q BP-284 FA-S67VC 150MHz 150MHz.da52:0

DUT: IC-F3400DT; Type: UHF Transceiver; Serial: 01000151

Communication System: UID 0, CW (0); Frequency: 150 MHz; Duty Cycle: 1:1
Medium parameters used: f = 150 MHz; σ = 0.762 S/m; ε_r = 50.524; ρ = 1000 kg/m^3 ; Phantom section: Flat Section ; Measurement Standard: DASY5 (IEEE/IEC/ANSI C63.19-2007)

DASY Configuration:

- Probe: ES3DV3 - SN3250; ConvF(7.57, 7.57, 7.57); Calibrated: 3/22/2016;
- Sensor-Surface: 3mm (Mechanical Surface Detection)
- Electronics: DAE4 Sn874; Calibrated: 8/24/2015
- Phantom: ELI 4.0; Type: QD OVA 001 BB; Serial: 1057
- DASY52 52.8.8(1222); SEMCAD X 14.6.10(7331)

Configuration_Head_IC-F3400DT/Head Front, P=5W, d=25mm/Area Scan (61x151x1):

Interpolated grid: dx=1.500 mm, dy=1.500 mm
Maximum value of SAR (interpolated) = 0.797 W/kg

Configuration_Head_IC-F3400DT/Head Front, P=5W, d=25mm/Zoom Scan (5x5x7) (5x5x7)/Cube 0:

Measurement grid: dx=7.5mm, dy=7.5mm, dz=5mm
Reference Value = 14.87 V/m; Power Drift = 0.01 dB
Peak SAR (extrapolated) = 1.01 W/kg
SAR(1 g) = 0.706 W/kg; SAR(10 g) = 0.539 W/kg (SAR corrected for target medium)
Maximum value of SAR (measured) = 0.790 W/kg

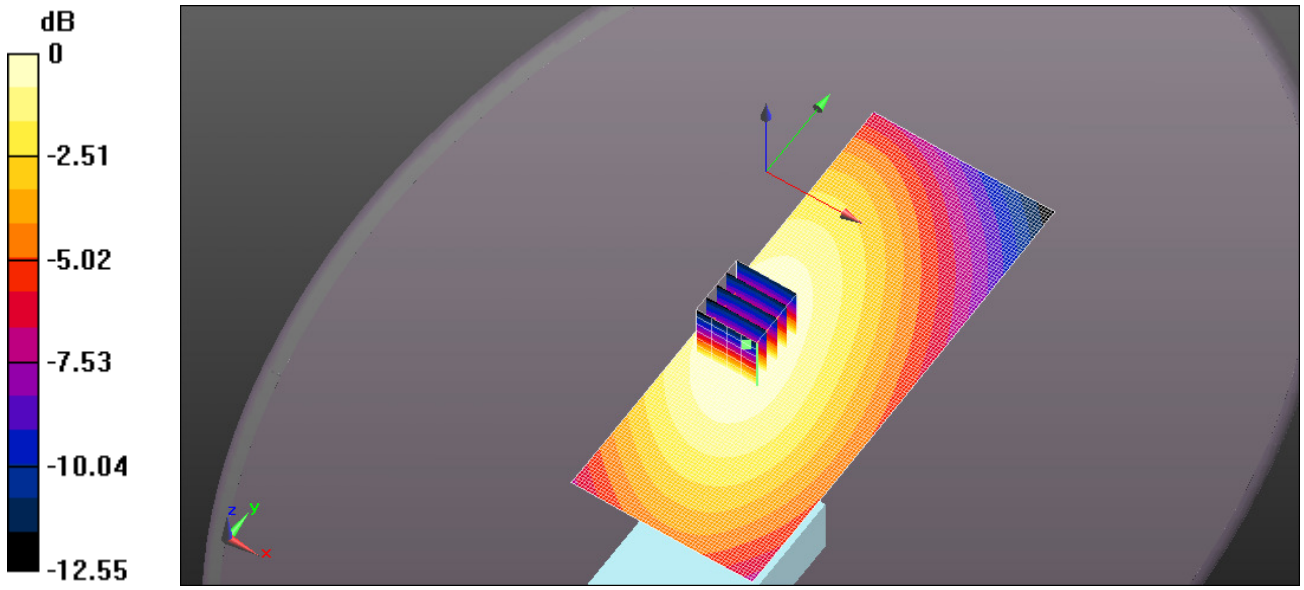

0 dB = 0.797 W/kg = -0.98 dBW/kg

Test Laboratory: Ultratech Group of Labs

FILE NAME: ICOM-435Q BP-284 FA-S67VC 150MHz 156MHz.da52:0

DUT: IC-F3400DT; Type: UHF Transceiver; Serial: 01000151

Communication System: UID 0, CW (0); Frequency: 156 MHz; Duty Cycle: 1:1
Medium parameters used: f = 156 MHz; σ = 0.769 S/m; ε_r = 50.103; ρ = 1000 kg/m^3 ; Phantom section: Flat Section ; Measurement Standard: DASY5 (IEEE/IEC/ANSI C63.19-2007)

DASY Configuration:

- Probe: ES3DV3 - SN3250; ConvF(7.57, 7.57, 7.57); Calibrated: 3/22/2016;
- Sensor-Surface: 3mm (Mechanical Surface Detection)
- Electronics: DAE4 Sn874; Calibrated: 8/24/2015
- Phantom: ELI 4.0; Type: QD OVA 001 BB; Serial: 1057
- DASY52 52.8.8(1222); SEMCAD X 14.6.10(7331)

Configuration_Head_IC-F3400DT/Head Front, P=5W, d=25mm/Area Scan (61x151x1):

Interpolated grid: dx=1.500 mm, dy=1.500 mm
Maximum value of SAR (interpolated) = 1.54 W/kg

Configuration_Head_IC-F3400DT/Head Front, P=5W, d=25mm/Zoom Scan (5x5x7) (5x5x7)/Cube 0:

Measurement grid: dx=7.5mm, dy=7.5mm, dz=5mm
Reference Value = 15.80 V/m; Power Drift = 0.04 dB
Peak SAR (extrapolated) = 1.96 W/kg
SAR(1 g) = 1.38 W/kg; SAR(10 g) = 1.05 W/kg (SAR corrected for target medium)
Maximum value of SAR (measured) = 1.54 W/kg

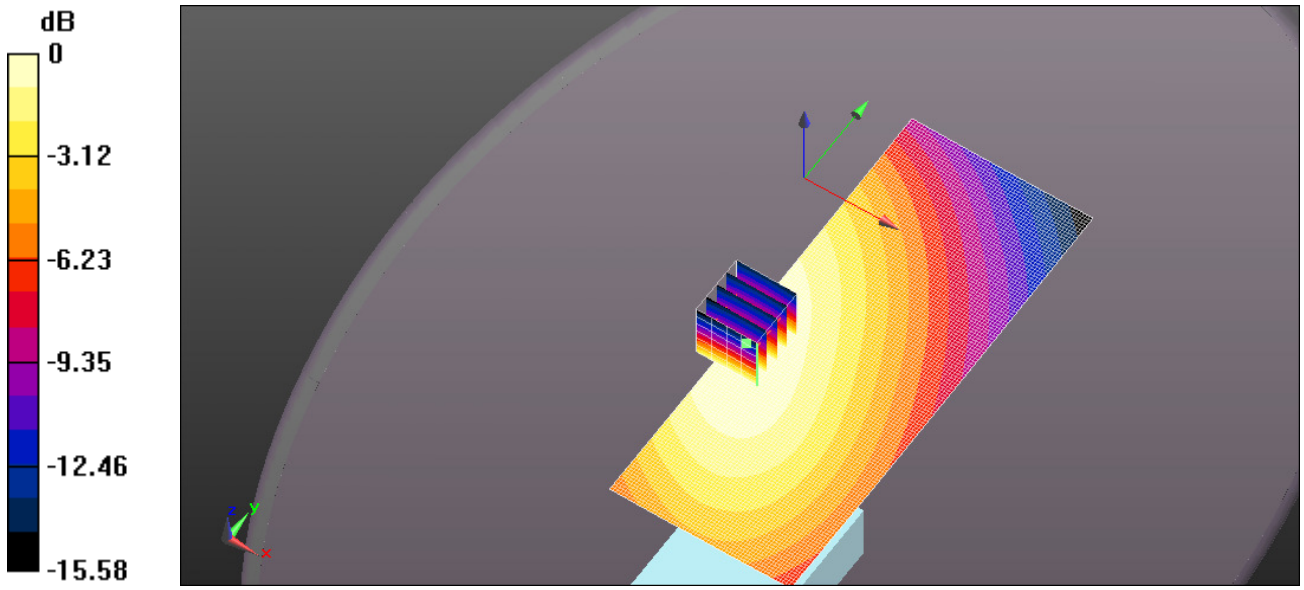

0 dB = 1.54 W/kg = 1.86 dBW/kg

Test Laboratory: Ultratech Group of Labs

FILE NAME: ICOM-435Q BP-284 FA-S67VC 150MHz 162MHz.da52:0

DUT: IC-F3400DT; Type: UHF Transceiver; Serial: 01000151

Communication System: UID 0, CW (0); Frequency: 162 MHz; Duty Cycle: 1:1
Medium parameters used: f = 162 MHz; σ = 0.771 S/m; ε_r = 50.035; ρ = 1000 kg/m^3 ; Phantom section: Flat Section ; Measurement Standard: DASY5 (IEEE/IEC/ANSI C63.19-2007)

DASY Configuration:

- Probe: ES3DV3 - SN3250; ConvF(7.57, 7.57, 7.57); Calibrated: 3/22/2016;
- Sensor-Surface: 3mm (Mechanical Surface Detection)
- Electronics: DAE4 Sn874; Calibrated: 8/24/2015
- Phantom: ELI 4.0; Type: QD OVA 001 BB; Serial: 1057
- DASY52 52.8.8(1222); SEMCAD X 14.6.10(7331)

Configuration_Head_IC-F3400DT/Head Front, P=5W, d=25mm/Area Scan (61x151x1):

Interpolated grid: dx=1.500 mm, dy=1.500 mm
Maximum value of SAR (interpolated) = 1.17 W/kg

Configuration_Head_IC-F3400DT/Head Front, P=5W, d=25mm/Zoom Scan (5x5x7) (5x5x7)/Cube 0:

Measurement grid: dx=7.5mm, dy=7.5mm, dz=5mm
Reference Value = 17.28 V/m; Power Drift = -0.02 dB
Peak SAR (extrapolated) = 1.49 W/kg
SAR(1 g) = 1.05 W/kg; SAR(10 g) = 0.793 W/kg (SAR corrected for target medium)
Maximum value of SAR (measured) = 1.16 W/kg

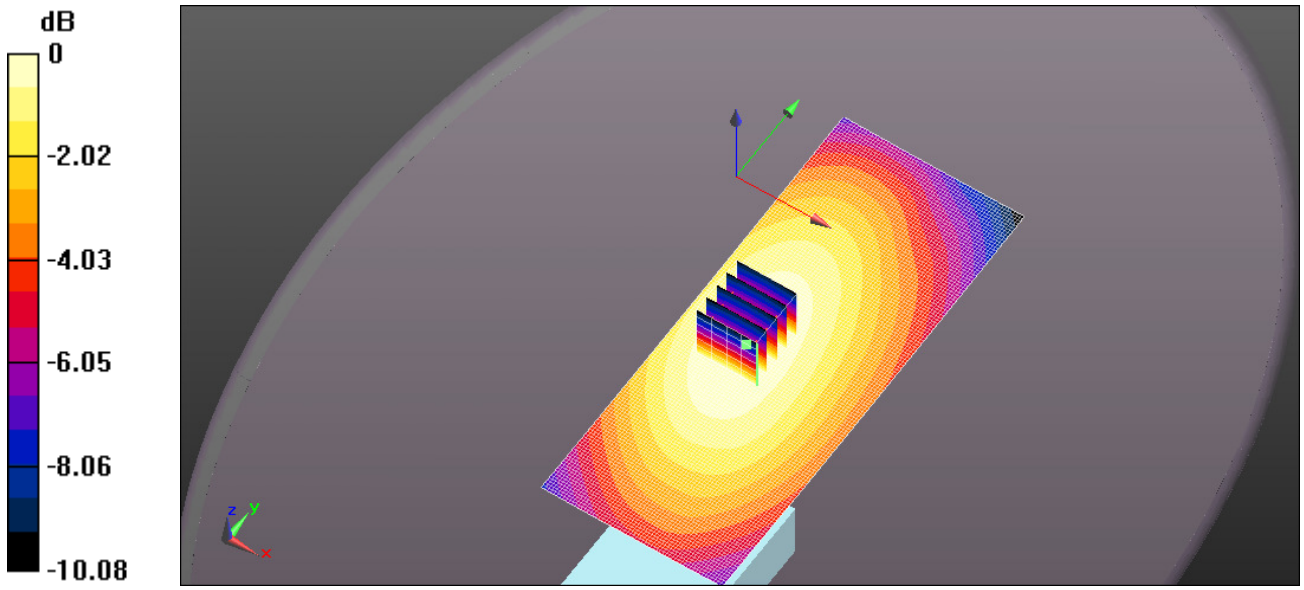

0 dB = 1.17 W/kg = 0.69 dBW/kg

Test Laboratory: Ultratech Group of Labs

FILE NAME: ICOM-435Q BP-284 FA-S67VC 150MHz 168MHz.da52:0

DUT: IC-F3400DT; Type: UHF Transceiver; Serial: 01000151

Communication System: UID 0, CW (0); Frequency: 168 MHz; Duty Cycle: 1:1
Medium parameters used: f = 168 MHz; σ = 0.773 S/m; ε_r = 49.612; ρ = 1000 kg/m^3 ; Phantom section: Flat Section ; Measurement Standard: DASY5 (IEEE/IEC/ANSI C63.19-2007)

DASY Configuration:

- Probe: ES3DV3 - SN3250; ConvF(7.57, 7.57, 7.57); Calibrated: 3/22/2016;
- Sensor-Surface: 3mm (Mechanical Surface Detection)
- Electronics: DAE4 Sn874; Calibrated: 8/24/2015
- Phantom: ELI 4.0; Type: QD OVA 001 BB; Serial: 1057
- DASY52 52.8.8(1222); SEMCAD X 14.6.10(7331)

Configuration_Head_IC-F3400DT/Head Front, P=5W, d=25mm/Area Scan (61x151x1):

Interpolated grid: dx=1.500 mm, dy=1.500 mm
Maximum value of SAR (interpolated) = 0.675 W/kg

Configuration_Head_IC-F3400DT/Head Front, P=5W, d=25mm/Zoom Scan (5x5x7) (5x5x7)/Cube 0:

Measurement grid: dx=7.5mm, dy=7.5mm, dz=5mm
Reference Value = 11.72 V/m; Power Drift = -0.04 dB
Peak SAR (extrapolated) = 0.857 W/kg
SAR(1 g) = 0.604 W/kg; SAR(10 g) = 0.459 W/kg (SAR corrected for target medium)
Maximum value of SAR (measured) = 0.670 W/kg

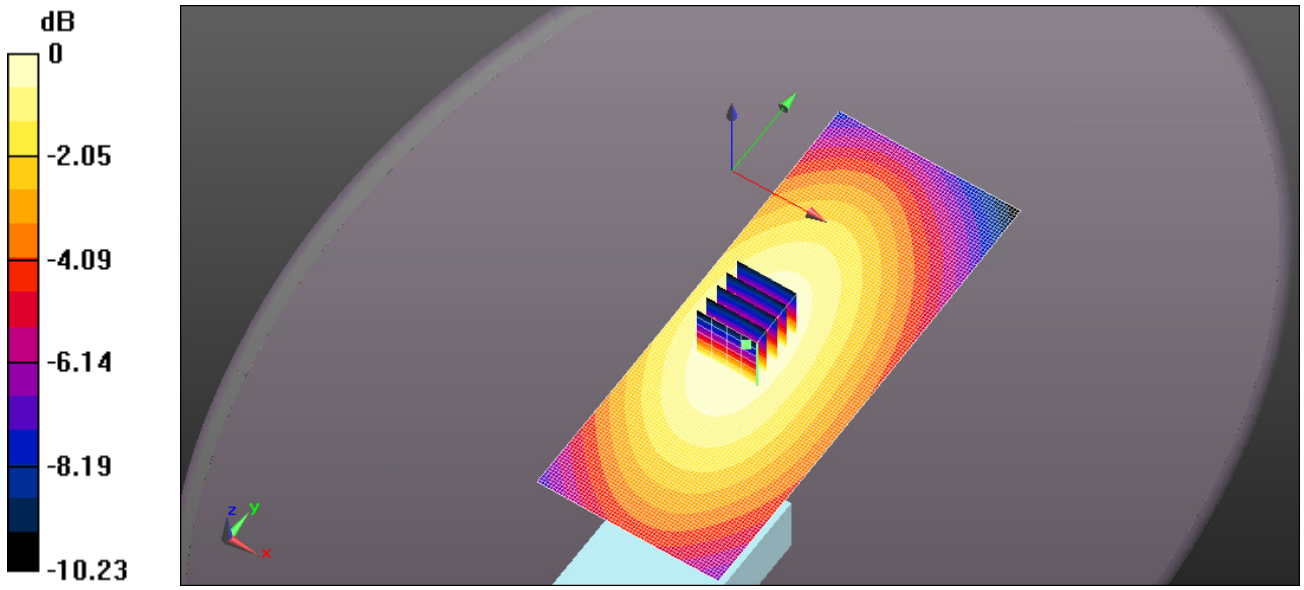

0 dB = 0.675 W/kg = -1.71 dBW/kg

Test Laboratory: Ultratech Group of Labs

FILE NAME: ICOM-435Q BP-284 FA-S67VC 150MHz 174MHz.da52:0

DUT: IC-F3400DT; Type: UHF Transceiver; Serial: 01000151

Communication System: UID 0, CW (0); Frequency: 174 MHz; Duty Cycle: 1:1
Medium parameters used: f = 174 MHz; σ = 0.781 S/m; ε_r = 49.537; ρ = 1000 kg/m^3 ; Phantom section: Flat Section ; Measurement Standard: DASY5 (IEEE/IEC/ANSI C63.19-2007)

DASY Configuration:

- Probe: ES3DV3 - SN3250; ConvF(7.57, 7.57, 7.57); Calibrated: 3/22/2016;
- Sensor-Surface: 3mm (Mechanical Surface Detection)
- Electronics: DAE4 Sn874; Calibrated: 8/24/2015
- Phantom: ELI 4.0; Type: QD OVA 001 BB; Serial: 1057
- DASY52 52.8.8(1222); SEMCAD X 14.6.10(7331)

Configuration_Head_IC-F3400DT/Head Front, P=5W, d=25mm/Area Scan (61x151x1):

Interpolated grid: dx=1.500 mm, dy=1.500 mm
Maximum value of SAR (interpolated) = 0.441 W/kg

Configuration_Head_IC-F3400DT/Head Front, P=5W, d=25mm/Zoom Scan (5x5x7) (5x5x7)/Cube 0:

Measurement grid: dx=7.5mm, dy=7.5mm, dz=5mm
Reference Value = 10.73 V/m; Power Drift = -0.26 dB
Peak SAR (extrapolated) = 0.597 W/kg
SAR(1 g) = 0.408 W/kg; SAR(10 g) = 0.304 W/kg (SAR corrected for target medium)
Maximum value of SAR (measured) = 0.444 W/kg

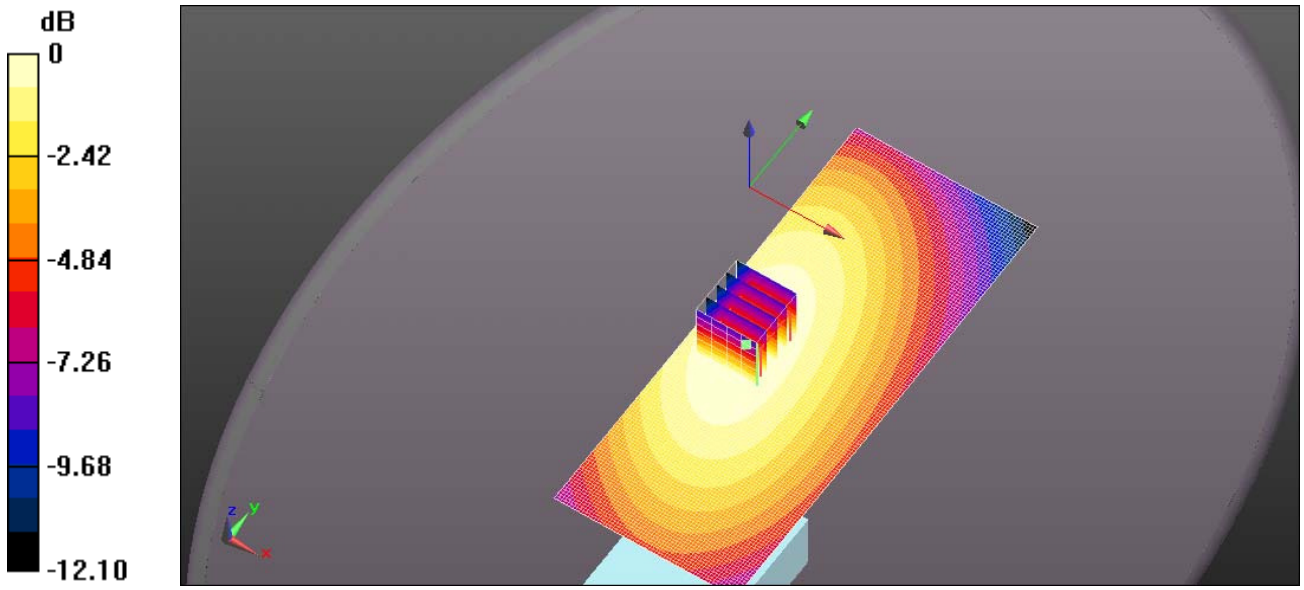

0 dB = 0.441 W/kg = -3.55 dBW/kg

Test Laboratory: Ultratech Group of Labs

FILE NAME: ICOM-435Q BP-284 FA-S67VC 155MHz 150MHz.da52:0

DUT: IC-F3400DT; Type: UHF Transceiver; Serial: 01000151

Communication System: UID 0, CW (0); Frequency: 150 MHz; Duty Cycle: 1:1
Medium parameters used: f = 150 MHz; σ = 0.762 S/m; ε_r = 50.524; ρ = 1000 kg/m^3 ; Phantom section: Flat Section ; Measurement Standard: DASY5 (IEEE/IEC/ANSI C63.19-2007)

DASY Configuration:

- Probe: ES3DV3 - SN3250; ConvF(7.57, 7.57, 7.57); Calibrated: 3/22/2016;
- Sensor-Surface: 3mm (Mechanical Surface Detection)
- Electronics: DAE4 Sn874; Calibrated: 8/24/2015
- Phantom: ELI 4.0; Type: QD OVA 001 BB; Serial: 1057
- DASY52 52.8.8(1222); SEMCAD X 14.6.10(7331)

Configuration_Head_IC-F3400DT/Head Front, P=5W, d=25mm/Area Scan (61x151x1):

Interpolated grid: dx=1.500 mm, dy=1.500 mm
Maximum value of SAR (interpolated) = 0.463 W/kg

Configuration_Head_IC-F3400DT/Head Front, P=5W, d=25mm/Zoom Scan (5x5x7) (5x5x7)/Cube 0:

Measurement grid: dx=7.5mm, dy=7.5mm, dz=5mm
Reference Value = 7.789 V/m; Power Drift = -0.06 dB
Peak SAR (extrapolated) = 0.588 W/kg
SAR(1 g) = 0.413 W/kg; SAR(10 g) = 0.314 W/kg (SAR corrected for target medium)
Maximum value of SAR (measured) = 0.462 W/kg

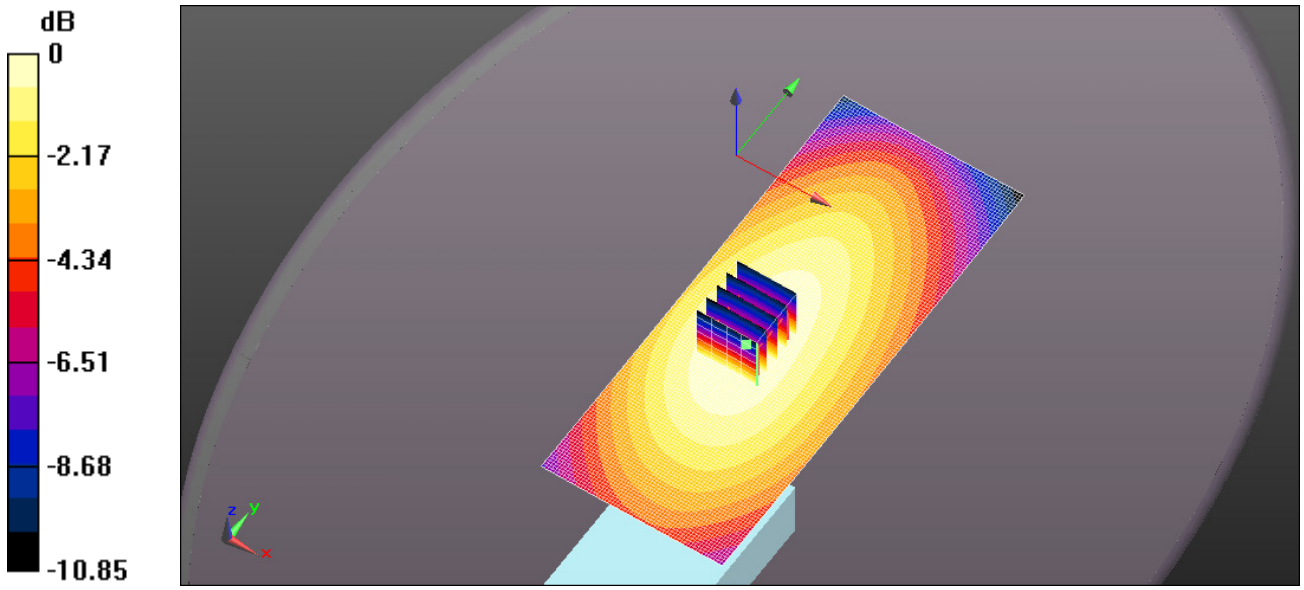

0 dB = 0.463 W/kg = -3.34 dBW/kg

Test Laboratory: Ultratech Group of Labs

FILE NAME: ICOM-435Q BP-284 FA-S67VC 155MHz 156MHz.da52:0

DUT: IC-F3400DT; Type: UHF Transceiver; Serial: 01000151

Communication System: UID 0, CW (0); Frequency: 156 MHz; Duty Cycle: 1:1
Medium parameters used: f = 156 MHz; σ = 0.769 S/m; ε_r = 50.103; ρ = 1000 kg/m^3 ; Phantom section: Flat Section ; Measurement Standard: DASY5 (IEEE/IEC/ANSI C63.19-2007)

DASY Configuration:

- Probe: ES3DV3 - SN3250; ConvF(7.57, 7.57, 7.57); Calibrated: 3/22/2016;
- Sensor-Surface: 3mm (Mechanical Surface Detection)
- Electronics: DAE4 Sn874; Calibrated: 8/24/2015
- Phantom: ELI 4.0; Type: QD OVA 001 BB; Serial: 1057
- DASY52 52.8.8(1222); SEMCAD X 14.6.10(7331)

Configuration_Head_IC-F3400DT/Head Front, P=5W, d=25mm/Area Scan (61x151x1):

Interpolated grid: dx=1.500 mm, dy=1.500 mm
Maximum value of SAR (interpolated) = 0.975 W/kg

Configuration_Head_IC-F3400DT/Head Front, P=5W, d=25mm/Zoom Scan (5x5x7) (5x5x7)/Cube 0:

Measurement grid: dx=7.5mm, dy=7.5mm, dz=5mm
Reference Value = 13.37 V/m; Power Drift = -0.00 dB
Peak SAR (extrapolated) = 1.24 W/kg
SAR(1 g) = 0.879 W/kg; SAR(10 g) = 0.668 W/kg (SAR corrected for target medium)
Maximum value of SAR (measured) = 0.976 W/kg

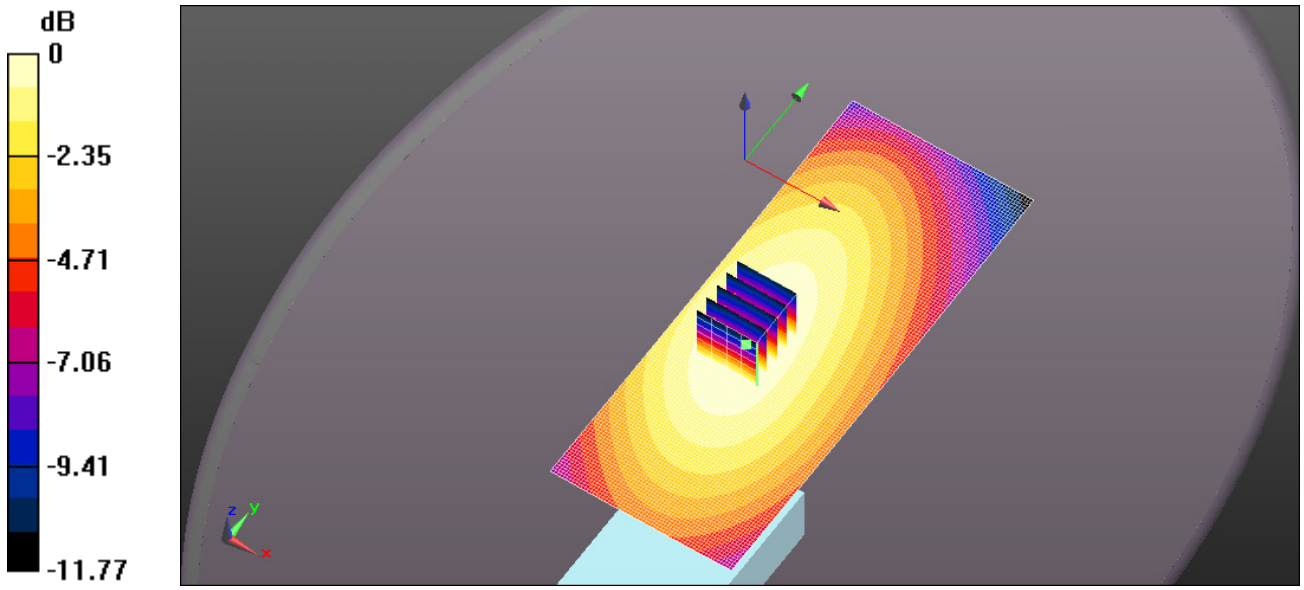

0 dB = 0.975 W/kg = -0.11 dBW/kg

Test Laboratory: Ultratech Group of Labs

FILE NAME: ICOM-435Q BP-284 FA-S67VC 155MHz 162MHz.da52:0

DUT: IC-F3400DT; Type: UHF Transceiver; Serial: 01000151

Communication System: UID 0, CW (0); Frequency: 162 MHz; Duty Cycle: 1:1
Medium parameters used: f = 162 MHz; σ = 0.771 S/m; ε_r = 50.035; ρ = 1000 kg/m^3 ; Phantom section: Flat Section ; Measurement Standard: DASY5 (IEEE/IEC/ANSI C63.19-2007)

DASY Configuration:

- Probe: ES3DV3 - SN3250; ConvF(7.57, 7.57, 7.57); Calibrated: 3/22/2016;
- Sensor-Surface: 3mm (Mechanical Surface Detection)
- Electronics: DAE4 Sn874; Calibrated: 8/24/2015
- Phantom: ELI 4.0; Type: QD OVA 001 BB; Serial: 1057
- DASY52 52.8.8(1222); SEMCAD X 14.6.10(7331)

Configuration_Head_IC-F3400DT/Head Front, P=5W, d=25mm/Area Scan (61x151x1):

Interpolated grid: dx=1.500 mm, dy=1.500 mm
Maximum value of SAR (interpolated) = 1.57 W/kg

Configuration_Head_IC-F3400DT/Head Front, P=5W, d=25mm/Zoom Scan (5x5x7) (5x5x7)/Cube 0:

Measurement grid: dx=7.5mm, dy=7.5mm, dz=5mm
Reference Value = 17.13 V/m; Power Drift = -0.01 dB
Peak SAR (extrapolated) = 1.99 W/kg
SAR(1 g) = 1.41 W/kg; SAR(10 g) = 1.07 W/kg (SAR corrected for target medium)
Maximum value of SAR (measured) = 1.57 W/kg

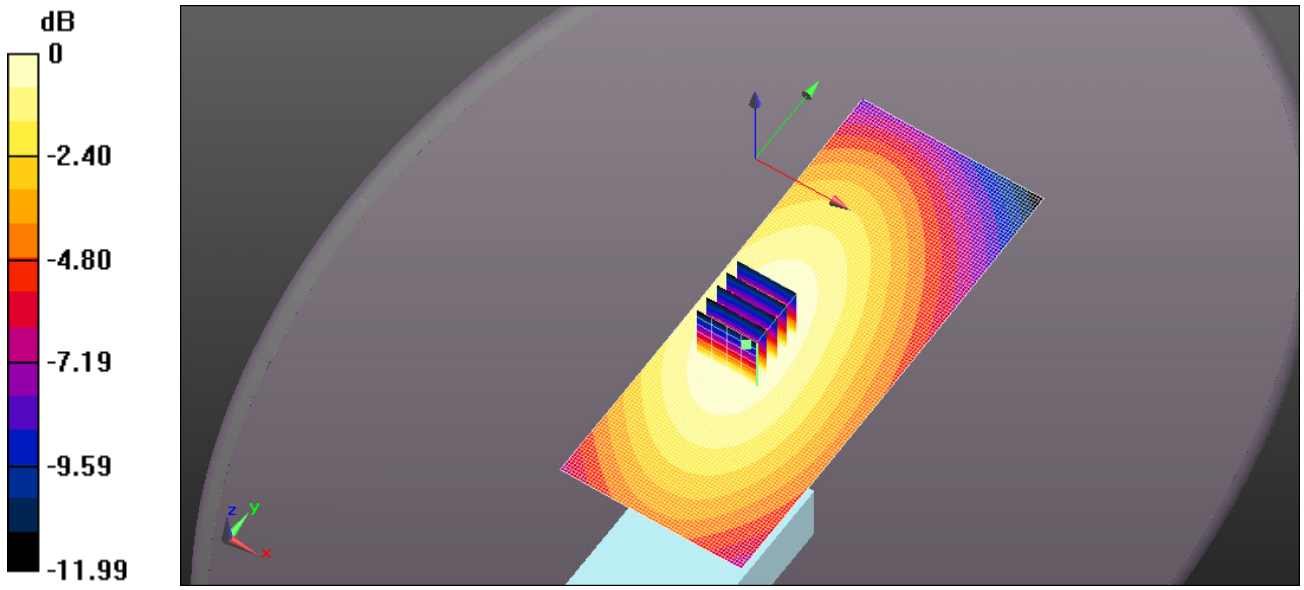

0 dB = 1.57 W/kg = 1.96 dBW/kg

Test Laboratory: Ultratech Group of Labs

FILE NAME: ICOM-435Q BP-284 FA-S67VC 155MHz 168MHz.da52:0

DUT: IC-F3400DT; Type: UHF Transceiver; Serial: 01000151

Communication System: UID 0, CW (0); Frequency: 168 MHz; Duty Cycle: 1:1
Medium parameters used: f = 168 MHz; σ = 0.773 S/m; ε_r = 49.612; ρ = 1000 kg/m^3 ; Phantom section: Flat Section ; Measurement Standard: DASY5 (IEEE/IEC/ANSI C63.19-2007)

DASY Configuration:

- Probe: ES3DV3 - SN3250; ConvF(7.57, 7.57, 7.57); Calibrated: 3/22/2016;
- Sensor-Surface: 3mm (Mechanical Surface Detection)
- Electronics: DAE4 Sn874; Calibrated: 8/24/2015
- Phantom: ELI 4.0; Type: QD OVA 001 BB; Serial: 1057
- DASY52 52.8.8(1222); SEMCAD X 14.6.10(7331)

Configuration_Head_IC-F3400DT/Head Front, P=5W, d=25mm/Area Scan (61x151x1):

Interpolated grid: dx=1.500 mm, dy=1.500 mm
Maximum value of SAR (interpolated) = 1.28 W/kg

Configuration_Head_IC-F3400DT/Head Front, P=5W, d=25mm/Zoom Scan (5x5x7) (5x5x7)/Cube 0:

Measurement grid: dx=7.5mm, dy=7.5mm, dz=5mm
Reference Value = 14.92 V/m; Power Drift = -0.03 dB
Peak SAR (extrapolated) = 1.64 W/kg
SAR(1 g) = 1.15 W/kg; SAR(10 g) = 0.872 W/kg (SAR corrected for target medium)
Maximum value of SAR (measured) = 1.28 W/kg

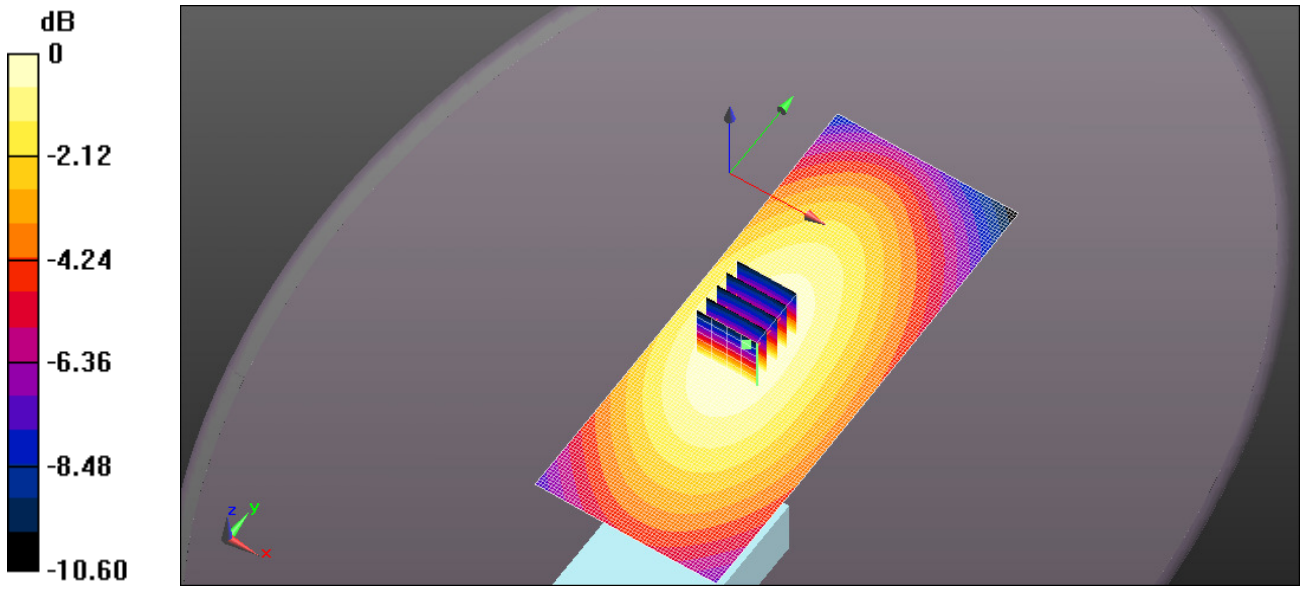

0 dB = 1.28 W/kg = 1.08 dBW/kg

Test Laboratory: Ultratech Group of Labs

FILE NAME: ICOM-435Q BP-284 FA-S67VC 155MHz 174MHz.da52:0

DUT: IC-F3400DT; Type: UHF Transceiver; Serial: 01000151

Communication System: UID 0, CW (0); Frequency: 174 MHz; Duty Cycle: 1:1
Medium parameters used: f = 174 MHz; σ = 0.781 S/m; ε_r = 49.537; ρ = 1000 kg/m^3 ; Phantom section: Flat Section ; Measurement Standard: DASY5 (IEEE/IEC/ANSI C63.19-2007)

DASY Configuration:

- Probe: ES3DV3 - SN3250; ConvF(7.57, 7.57, 7.57); Calibrated: 3/22/2016;
- Sensor-Surface: 3mm (Mechanical Surface Detection)
- Electronics: DAE4 Sn874; Calibrated: 8/24/2015
- Phantom: ELI 4.0; Type: QD OVA 001 BB; Serial: 1057
- DASY52 52.8.8(1222); SEMCAD X 14.6.10(7331)

Configuration_Head_IC-F3400DT/Head Front, P=5W, d=25mm/Area Scan (61x151x1):

Interpolated grid: dx=1.500 mm, dy=1.500 mm
Maximum value of SAR (interpolated) = 0.869 W/kg

Configuration_Head_IC-F3400DT/Head Front, P=5W, d=25mm/Zoom Scan (5x5x7) (5x5x7)/Cube 0:

Measurement grid: dx=7.5mm, dy=7.5mm, dz=5mm
Reference Value = 12.47 V/m; Power Drift = -0.03 dB
Peak SAR (extrapolated) = 1.12 W/kg
SAR(1 g) = 0.787 W/kg; SAR(10 g) = 0.595 W/kg (SAR corrected for target medium)
Maximum value of SAR (measured) = 0.877 W/kg

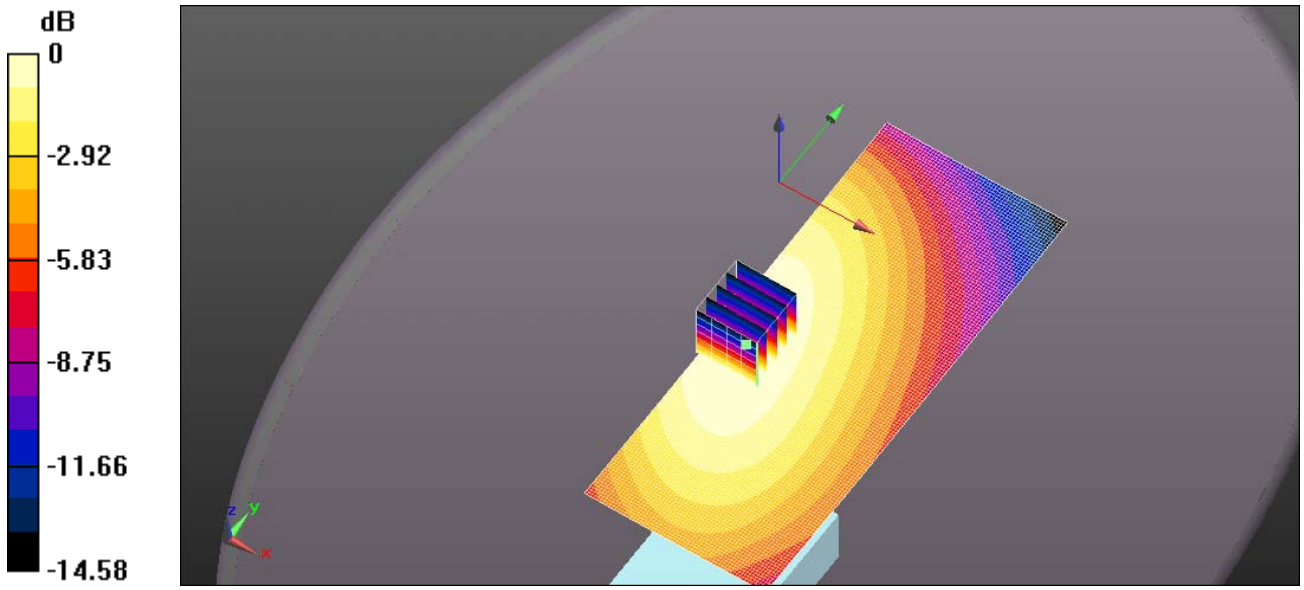

0 dB = 0.869 W/kg = -0.61 dBW/kg

Test Laboratory: Ultratech Group of Labs

FILE NAME: ICOM-435Q BP-284 FA-S67VC 160MHz 150MHz.da52:0

DUT: IC-F3400DT; Type: UHF Transceiver; Serial: 01000151

Communication System: UID 0, CW (0); Frequency: 150 MHz; Duty Cycle: 1:1
Medium parameters used: f = 150 MHz; σ = 0.762 S/m; ε_r = 50.524; ρ = 1000 kg/m^3 ; Phantom section: Flat Section ; Measurement Standard: DASY5 (IEEE/IEC/ANSI C63.19-2007)

DASY Configuration:

- Probe: ES3DV3 - SN3250; ConvF(7.57, 7.57, 7.57); Calibrated: 3/22/2016;
- Sensor-Surface: 3mm (Mechanical Surface Detection)
- Electronics: DAE4 Sn874; Calibrated: 8/24/2015
- Phantom: ELI 4.0; Type: QD OVA 001 BB; Serial: 1057
- DASY52 52.8.8(1222); SEMCAD X 14.6.10(7331)

Configuration_Head_IC-F3400DT/Head Front, P=5W, d=25mm/Area Scan (61x151x1):

Interpolated grid: dx=1.500 mm, dy=1.500 mm
Maximum value of SAR (interpolated) = 0.219 W/kg

Configuration_Head_IC-F3400DT/Head Front, P=5W, d=25mm/Zoom Scan (5x5x7) (5x5x7)/Cube 0:

Measurement grid: dx=7.5mm, dy=7.5mm, dz=5mm
Reference Value = 5.818 V/m; Power Drift = -0.06 dB
Peak SAR (extrapolated) = 0.278 W/kg
SAR(1 g) = 0.194 W/kg; SAR(10 g) = 0.147 W/kg (SAR corrected for target medium)
Maximum value of SAR (measured) = 0.218 W/kg

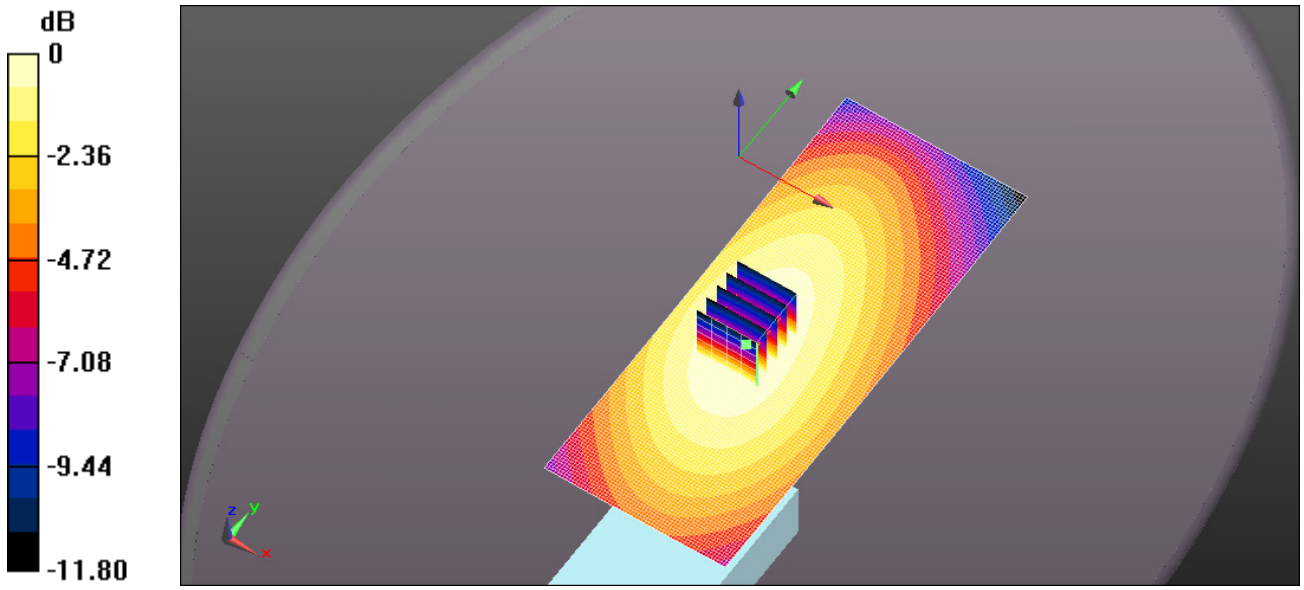

0 dB = 0.219 W/kg = -6.60 dBW/kg

Test Laboratory: Ultratech Group of Labs

FILE NAME: ICOM-435Q BP-284 FA-S67VC 160MHz 156MHz.da52:0

DUT: IC-F3400DT; Type: UHF Transceiver; Serial: 01000151

Communication System: UID 0, CW (0); Frequency: 156 MHz; Duty Cycle: 1:1
Medium parameters used: f = 156 MHz; σ = 0.769 S/m; ε_r = 50.103; ρ = 1000 kg/m^3 ; Phantom section: Flat Section ; Measurement Standard: DASY5 (IEEE/IEC/ANSI C63.19-2007)

DASY Configuration:

- Probe: ES3DV3 - SN3250; ConvF(7.57, 7.57, 7.57); Calibrated: 3/22/2016;
- Sensor-Surface: 3mm (Mechanical Surface Detection)
- Electronics: DAE4 Sn874; Calibrated: 8/24/2015
- Phantom: ELI 4.0; Type: QD OVA 001 BB; Serial: 1057
- DASY52 52.8.8(1222); SEMCAD X 14.6.10(7331)

Configuration_Head_IC-F3400DT/Head Front, P=5W, d=25mm/Area Scan (61x151x1):

Interpolated grid: dx=1.500 mm, dy=1.500 mm
Maximum value of SAR (interpolated) = 0.453 W/kg

Configuration_Head_IC-F3400DT/Head Front, P=5W, d=25mm/Zoom Scan (5x5x7) (5x5x7)/Cube 0:

Measurement grid: dx=7.5mm, dy=7.5mm, dz=5mm
Reference Value = 8.490 V/m; Power Drift = -0.01 dB
Peak SAR (extrapolated) = 0.579 W/kg
SAR(1 g) = 0.405 W/kg; SAR(10 g) = 0.307 W/kg (SAR corrected for target medium)
Maximum value of SAR (measured) = 0.452 W/kg

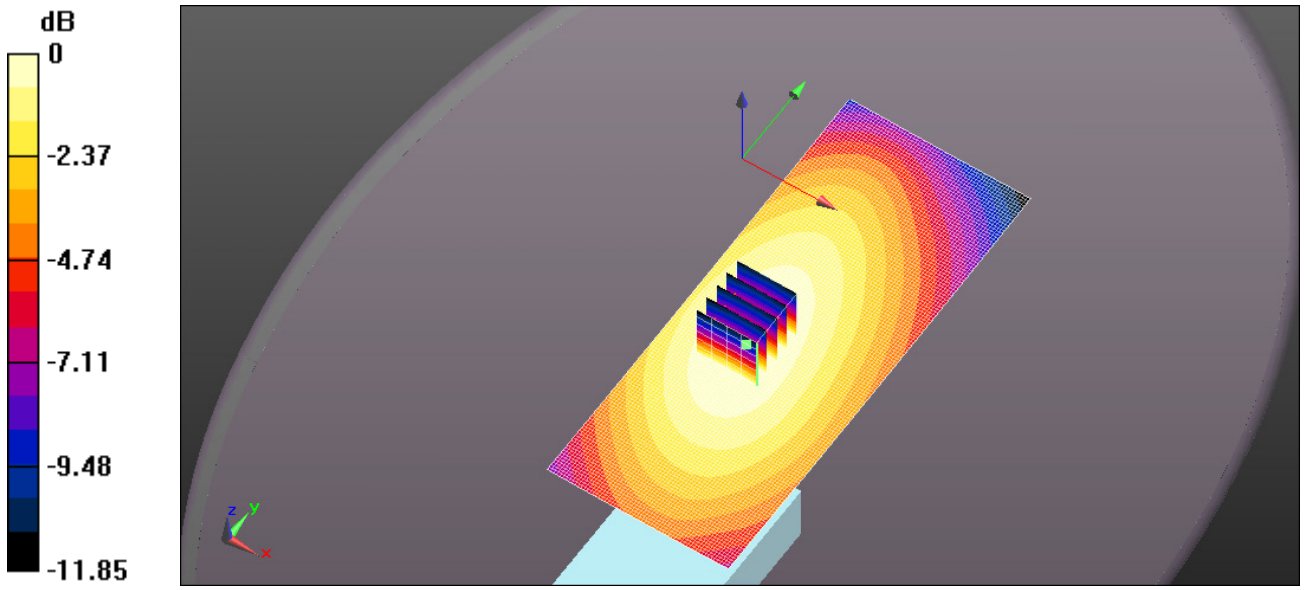

0 dB = 0.453 W/kg = -3.44 dBW/kg

Test Laboratory: Ultratech Group of Labs

FILE NAME: ICOM-435Q BP-284 FA-S67VC 160MHz 162MHz.da52:0

DUT: IC-F3400DT; Type: UHF Transceiver; Serial: 01000151

Communication System: UID 0, CW (0); Frequency: 162 MHz; Duty Cycle: 1:1
Medium parameters used: f = 162 MHz; σ = 0.771 S/m; ε_r = 50.035; ρ = 1000 kg/m^3 ; Phantom section: Flat Section ; Measurement Standard: DASY5 (IEEE/IEC/ANSI C63.19-2007)

DASY Configuration:

- Probe: ES3DV3 - SN3250; ConvF(7.57, 7.57, 7.57); Calibrated: 3/22/2016;
- Sensor-Surface: 3mm (Mechanical Surface Detection)
- Electronics: DAE4 Sn874; Calibrated: 8/24/2015
- Phantom: ELI 4.0; Type: QD OVA 001 BB; Serial: 1057
- DASY52 52.8.8(1222); SEMCAD X 14.6.10(7331)

Configuration_Head_IC-F3400DT/Head Front, P=5W, d=25mm/Area Scan (61x151x1):

Interpolated grid: dx=1.500 mm, dy=1.500 mm
Maximum value of SAR (interpolated) = 0.887 W/kg

Configuration_Head_IC-F3400DT/Head Front, P=5W, d=25mm/Zoom Scan (5x5x7) (5x5x7)/Cube 0:

Measurement grid: dx=7.5mm, dy=7.5mm, dz=5mm
Reference Value = 12.69 V/m; Power Drift = -0.02 dB
Peak SAR (extrapolated) = 1.13 W/kg
SAR(1 g) = 0.794 W/kg; SAR(10 g) = 0.601 W/kg (SAR corrected for target medium)
Maximum value of SAR (measured) = 0.885 W/kg

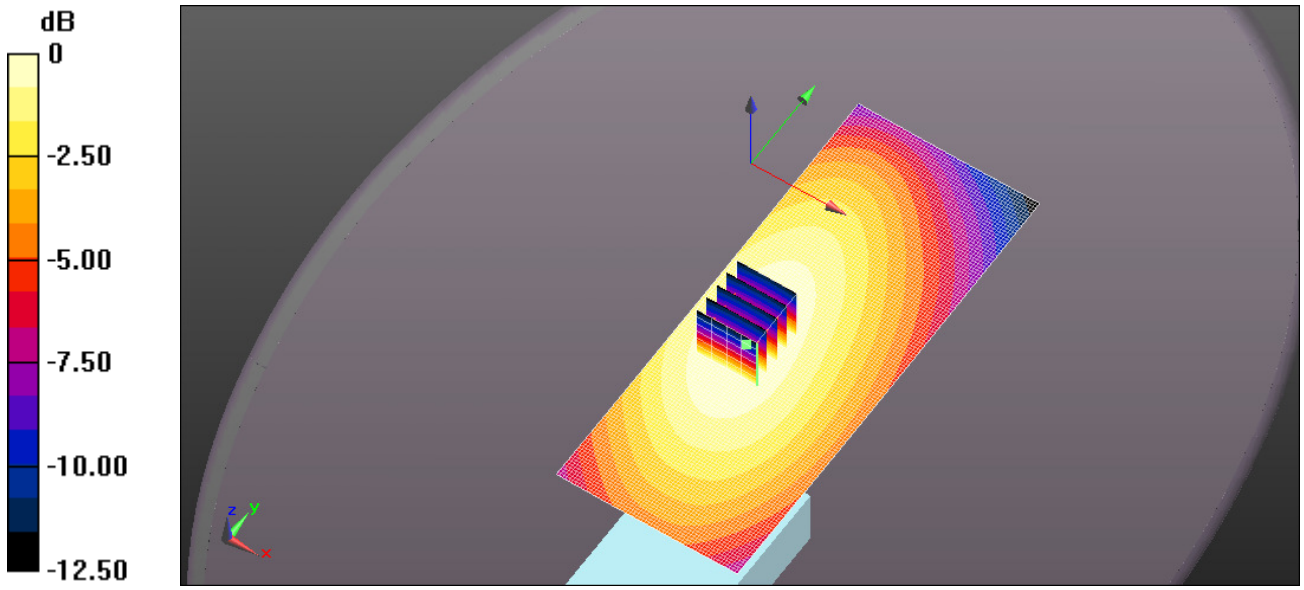

0 dB = 0.887 W/kg = -0.52 dBW/kg

Test Laboratory: Ultratech Group of Labs

FILE NAME: ICOM-435Q BP-284 FA-S67VC 160MHz 168MHz.da52:0

DUT: IC-F3400DT; Type: UHF Transceiver; Serial: 01000151

Communication System: UID 0, CW (0); Frequency: 168 MHz; Duty Cycle: 1:1
Medium parameters used: f = 168 MHz; σ = 0.773 S/m; ε_r = 49.612; ρ = 1000 kg/m^3 ; Phantom section: Flat Section ; Measurement Standard: DASY5 (IEEE/IEC/ANSI C63.19-2007)

DASY Configuration:

- Probe: ES3DV3 - SN3250; ConvF(7.57, 7.57, 7.57); Calibrated: 3/22/2016;
- Sensor-Surface: 3mm (Mechanical Surface Detection)
- Electronics: DAE4 Sn874; Calibrated: 8/24/2015
- Phantom: ELI 4.0; Type: QD OVA 001 BB; Serial: 1057
- DASY52 52.8.8(1222); SEMCAD X 14.6.10(7331)

Configuration_Head_IC-F3400DT/Head Front, P=5W, d=25mm/Area Scan (61x151x1):

Interpolated grid: dx=1.500 mm, dy=1.500 mm
Maximum value of SAR (interpolated) = 1.92 W/kg

Configuration_Head_IC-F3400DT/Head Front, P=5W, d=25mm/Zoom Scan (5x5x7) (5x5x7)/Cube 0:

Measurement grid: dx=7.5mm, dy=7.5mm, dz=5mm
Reference Value = 16.49 V/m; Power Drift = -0.06 dB
Peak SAR (extrapolated) = 2.41 W/kg
SAR(1 g) = 1.69 W/kg; SAR(10 g) = 1.28 W/kg (SAR corrected for target medium)
Maximum value of SAR (measured) = 1.88 W/kg

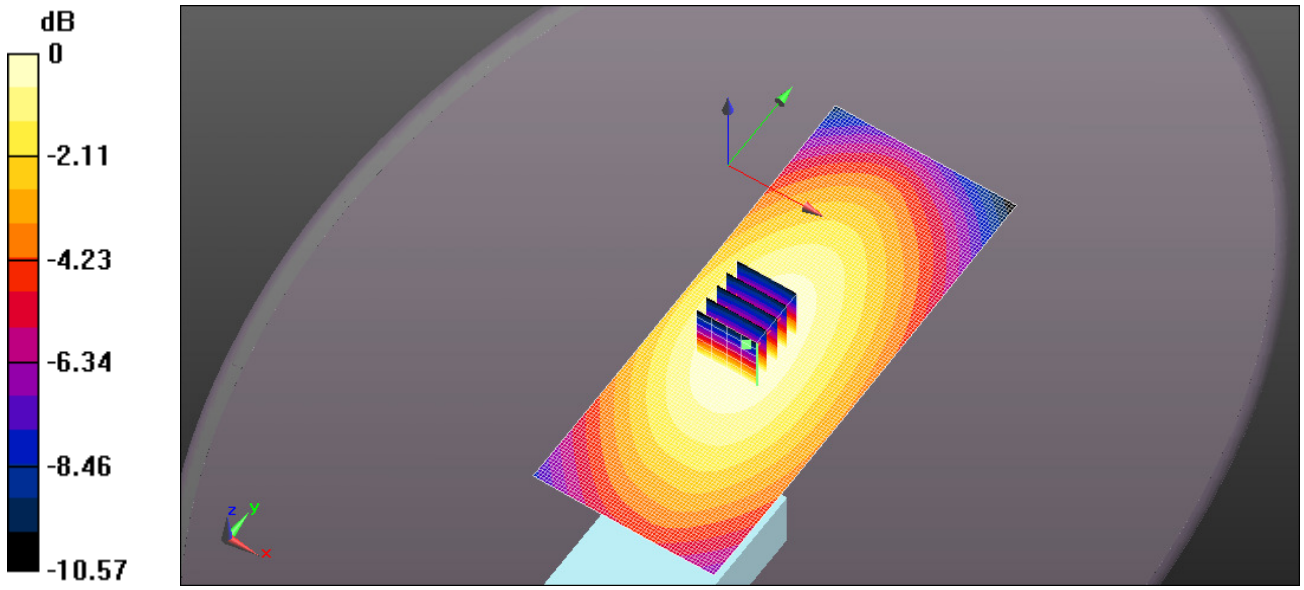

0 dB = 1.92 W/kg = 2.83 dBW/kg

Test Laboratory: Ultratech Group of Labs

FILE NAME: ICOM-435Q BP-284 FA-S67VC 160MHz 174MHz.da52:0

DUT: IC-F3400DT; Type: UHF Transceiver; Serial: 01000151

Communication System: UID 0, CW (0); Frequency: 174 MHz; Duty Cycle: 1:1
Medium parameters used: f = 174 MHz; σ = 0.781 S/m; ε_r = 49.537; ρ = 1000 kg/m^3 ; Phantom section: Flat Section ; Measurement Standard: DASY5 (IEEE/IEC/ANSI C63.19-2007)

DASY Configuration:

- Probe: ES3DV3 - SN3250; ConvF(7.57, 7.57, 7.57); Calibrated: 3/22/2016;
- Sensor-Surface: 3mm (Mechanical Surface Detection)
- Electronics: DAE4 Sn874; Calibrated: 8/24/2015
- Phantom: ELI 4.0; Type: QD OVA 001 BB; Serial: 1057
- DASY52 52.8.8(1222); SEMCAD X 14.6.10(7331)

Configuration_Head_IC-F3400DT/Head Front, P=5W, d=25mm/Area Scan (61x151x1):

Interpolated grid: dx=1.500 mm, dy=1.500 mm
Maximum value of SAR (interpolated) = 1.73 W/kg

Configuration_Head_IC-F3400DT/Head Front, P=5W, d=25mm/Zoom Scan (5x5x7) (5x5x7)/Cube 0:

Measurement grid: dx=7.5mm, dy=7.5mm, dz=5mm
Reference Value = 18.09 V/m; Power Drift = 0.08 dB
Peak SAR (extrapolated) = 2.21 W/kg
SAR(1 g) = 1.55 W/kg; SAR(10 g) = 1.17 W/kg (SAR corrected for target medium)
Maximum value of SAR (measured) = 1.72 W/kg

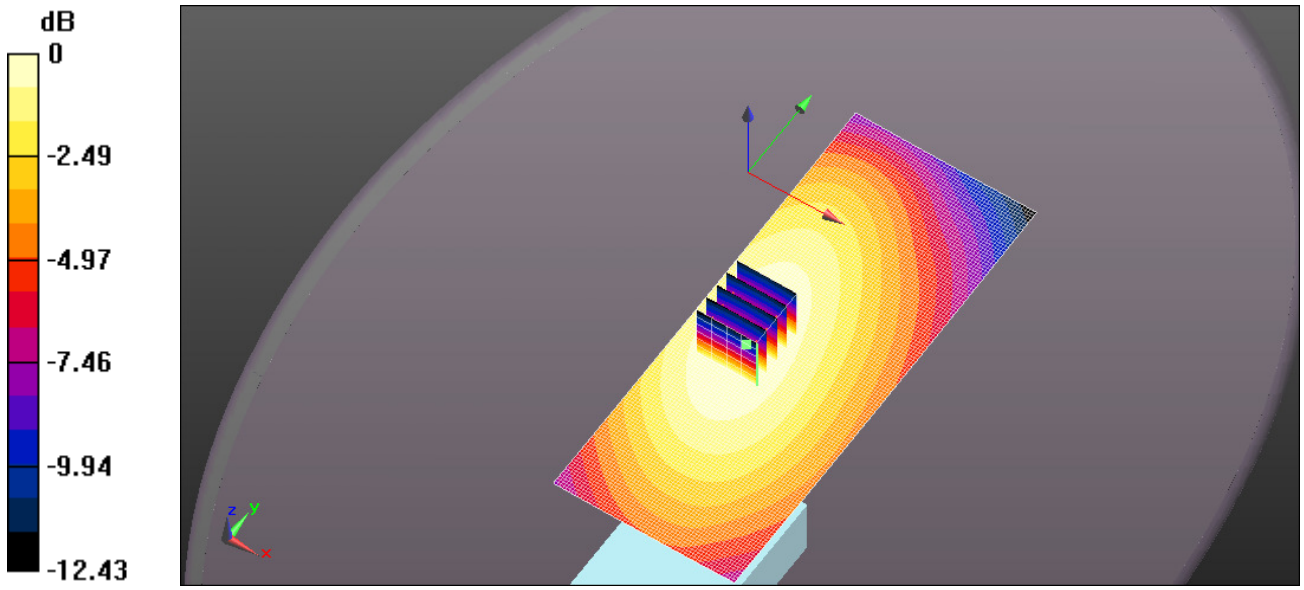

0 dB = 1.73 W/kg = 2.39 dBW/kg

Test Laboratory: Ultratech Group of Labs

FILE NAME: ICOM-435Q BP-284 FA-S67VC 165MHz 150MHz.da52:0

DUT: IC-F3400DT; Type: UHF Transceiver; Serial: 01000151

Communication System: UID 0, CW (0); Frequency: 150 MHz; Duty Cycle: 1:1
Medium parameters used: f = 150 MHz; σ = 0.762 S/m; ε_r = 50.524; ρ = 1000 kg/m^3 ; Phantom section: Flat Section ; Measurement Standard: DASY5 (IEEE/IEC/ANSI C63.19-2007)

DASY Configuration:

- Probe: ES3DV3 - SN3250; ConvF(7.57, 7.57, 7.57); Calibrated: 3/22/2016;
- Sensor-Surface: 3mm (Mechanical Surface Detection)
- Electronics: DAE4 Sn874; Calibrated: 8/24/2015
- Phantom: ELI 4.0; Type: QD OVA 001 BB; Serial: 1057
- DASY52 52.8.8(1222); SEMCAD X 14.6.10(7331)

Configuration_Head_IC-F3400DT/Head Front, P=5W, d=25mm/Area Scan (61x151x1):

Interpolated grid: dx=1.500 mm, dy=1.500 mm
Maximum value of SAR (interpolated) = 0.138 W/kg

Configuration_Head_IC-F3400DT/Head Front, P=5W, d=25mm/Zoom Scan (5x5x7) (5x5x7)/Cube 0:

Measurement grid: dx=7.5mm, dy=7.5mm, dz=5mm
Reference Value = 4.054 V/m; Power Drift = 0.04 dB
Peak SAR (extrapolated) = 0.175 W/kg
SAR(1 g) = 0.122 W/kg; SAR(10 g) = 0.093 W/kg (SAR corrected for target medium)
Maximum value of SAR (measured) = 0.137 W/kg

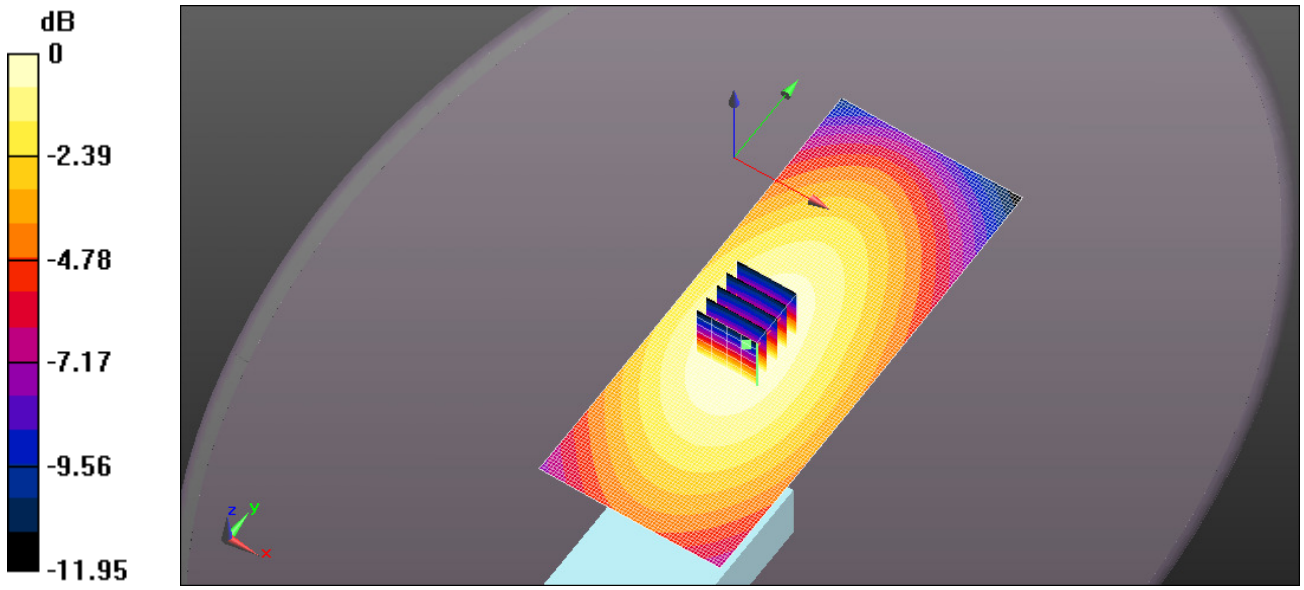

0 dB = 0.138 W/kg = -8.61 dBW/kg

Test Laboratory: Ultratech Group of Labs

FILE NAME: ICOM-435Q BP-284 FA-S67VC 165MHz 156MHz.da52:0

DUT: IC-F3400DT; Type: UHF Transceiver; Serial: 01000151

Communication System: UID 0, CW (0); Frequency: 156 MHz; Duty Cycle: 1:1
Medium parameters used: f = 156 MHz; σ = 0.769 S/m; ε_r = 50.103; ρ = 1000 kg/m^3 ; Phantom section: Flat Section ; Measurement Standard: DASY5 (IEEE/IEC/ANSI C63.19-2007)

DASY Configuration:

- Probe: ES3DV3 - SN3250; ConvF(7.57, 7.57, 7.57); Calibrated: 3/22/2016;
- Sensor-Surface: 3mm (Mechanical Surface Detection)
- Electronics: DAE4 Sn874; Calibrated: 8/24/2015
- Phantom: ELI 4.0; Type: QD OVA 001 BB; Serial: 1057
- DASY52 52.8.8(1222); SEMCAD X 14.6.10(7331)

Configuration_Head_IC-F3400DT/Head Front, P=5W, d=25mm/Area Scan (61x151x1):

Interpolated grid: dx=1.500 mm, dy=1.500 mm
Maximum value of SAR (interpolated) = 0.259 W/kg

Configuration_Head_IC-F3400DT/Head Front, P=5W, d=25mm/Zoom Scan (5x5x7) (5x5x7)/Cube 0:

Measurement grid: dx=7.5mm, dy=7.5mm, dz=5mm
Reference Value = 5.678 V/m; Power Drift = 0.04 dB
Peak SAR (extrapolated) = 0.330 W/kg
SAR(1 g) = 0.233 W/kg; SAR(10 g) = 0.177 W/kg (SAR corrected for target medium)
Maximum value of SAR (measured) = 0.259 W/kg

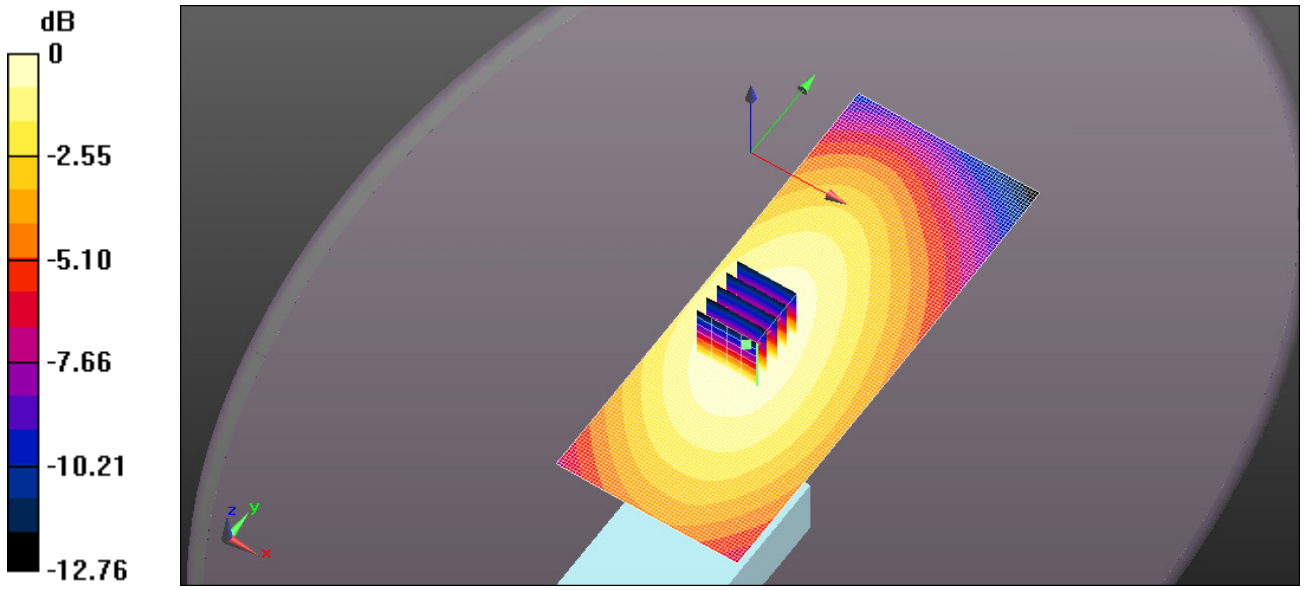

0 dB = 0.259 W/kg = -5.86 dBW/kg

Test Laboratory: Ultratech Group of Labs

FILE NAME: ICOM-435Q BP-284 FA-S67VC 165MHz 162MHz.da52:0

DUT: IC-F3400DT; Type: UHF Transceiver; Serial: 01000151

Communication System: UID 0, CW (0); Frequency: 162 MHz; Duty Cycle: 1:1
Medium parameters used: f = 162 MHz; σ = 0.771 S/m; ε_r = 50.035; ρ = 1000 kg/m^3 ; Phantom section: Flat Section ; Measurement Standard: DASY5 (IEEE/IEC/ANSI C63.19-2007)

DASY Configuration:

- Probe: ES3DV3 - SN3250; ConvF(7.57, 7.57, 7.57); Calibrated: 3/22/2016;
- Sensor-Surface: 3mm (Mechanical Surface Detection)
- Electronics: DAE4 Sn874; Calibrated: 8/24/2015
- Phantom: ELI 4.0; Type: QD OVA 001 BB; Serial: 1057
- DASY52 52.8.8(1222); SEMCAD X 14.6.10(7331)

Configuration_Head_IC-F3400DT/Head Front, P=5W, d=25mm/Area Scan (61x151x1):

Interpolated grid: dx=1.500 mm, dy=1.500 mm
Maximum value of SAR (interpolated) = 0.485 W/kg

Configuration_Head_IC-F3400DT/Head Front, P=5W, d=25mm/Zoom Scan (5x5x7) (5x5x7)/Cube 0:

Measurement grid: dx=7.5mm, dy=7.5mm, dz=5mm
Reference Value = 8.146 V/m; Power Drift = -0.01 dB
Peak SAR (extrapolated) = 0.624 W/kg
SAR(1 g) = 0.438 W/kg; SAR(10 g) = 0.331 W/kg (SAR corrected for target medium)
Maximum value of SAR (measured) = 0.487 W/kg

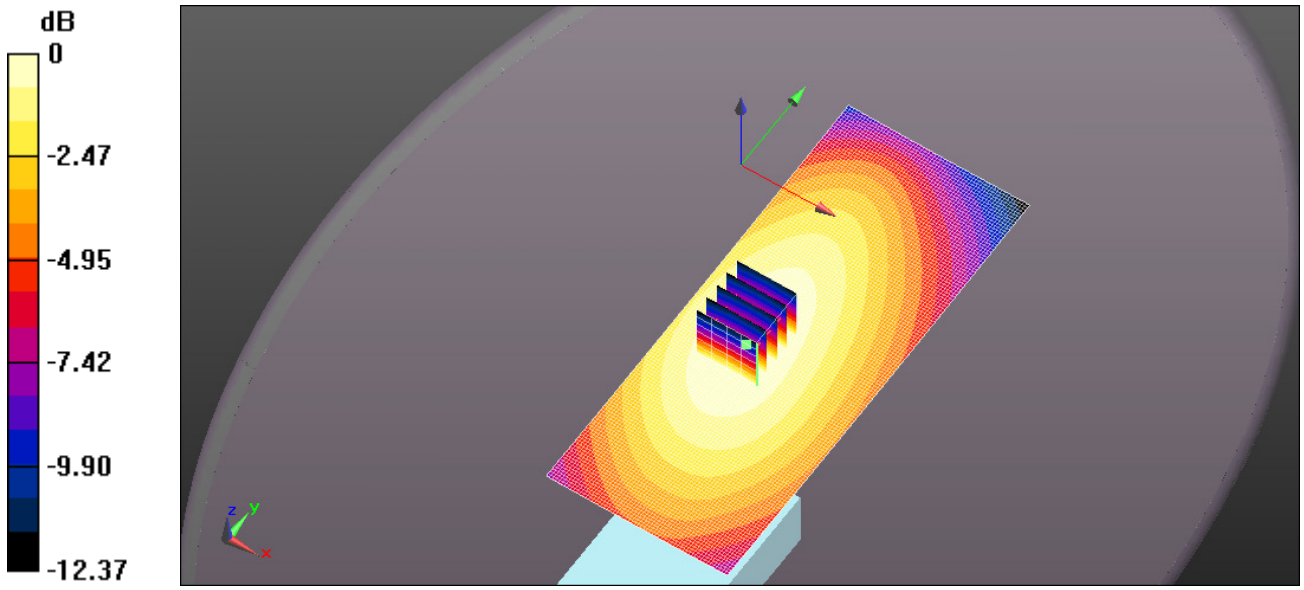

0 dB = 0.485 W/kg = -3.14 dBW/kg

Test Laboratory: Ultratech Group of Labs

FILE NAME: ICOM-435Q BP-284 FA-S67VC 165MHz 168MHz.da52:0

DUT: IC-F3400DT; Type: UHF Transceiver; Serial: 01000151

Communication System: UID 0, CW (0); Frequency: 168 MHz; Duty Cycle: 1:1
Medium parameters used: f = 168 MHz; σ = 0.773 S/m; ε_r = 49.612; ρ = 1000 kg/m^3 ; Phantom section: Flat Section ; Measurement Standard: DASY5 (IEEE/IEC/ANSI C63.19-2007)

DASY Configuration:

- Probe: ES3DV3 - SN3250; ConvF(7.57, 7.57, 7.57); Calibrated: 3/22/2016;
- Sensor-Surface: 3mm (Mechanical Surface Detection)
- Electronics: DAE4 Sn874; Calibrated: 8/24/2015
- Phantom: ELI 4.0; Type: QD OVA 001 BB; Serial: 1057
- DASY52 52.8.8(1222); SEMCAD X 14.6.10(7331)

Configuration_Head_IC-F3400DT/Head Front, P=5W, d=25mm/Area Scan (61x151x1):

Interpolated grid: dx=1.500 mm, dy=1.500 mm
Maximum value of SAR (interpolated) = 0.938 W/kg

Configuration_Head_IC-F3400DT/Head Front, P=5W, d=25mm/Zoom Scan (5x5x7) (5x5x7)/Cube 0:

Measurement grid: dx=7.5mm, dy=7.5mm, dz=5mm
Reference Value = 10.83 V/m; Power Drift = -0.01 dB
Peak SAR (extrapolated) = 1.20 W/kg
SAR(1 g) = 0.844 W/kg; SAR(10 g) = 0.637 W/kg (SAR corrected for target medium)
Maximum value of SAR (measured) = 0.940 W/kg

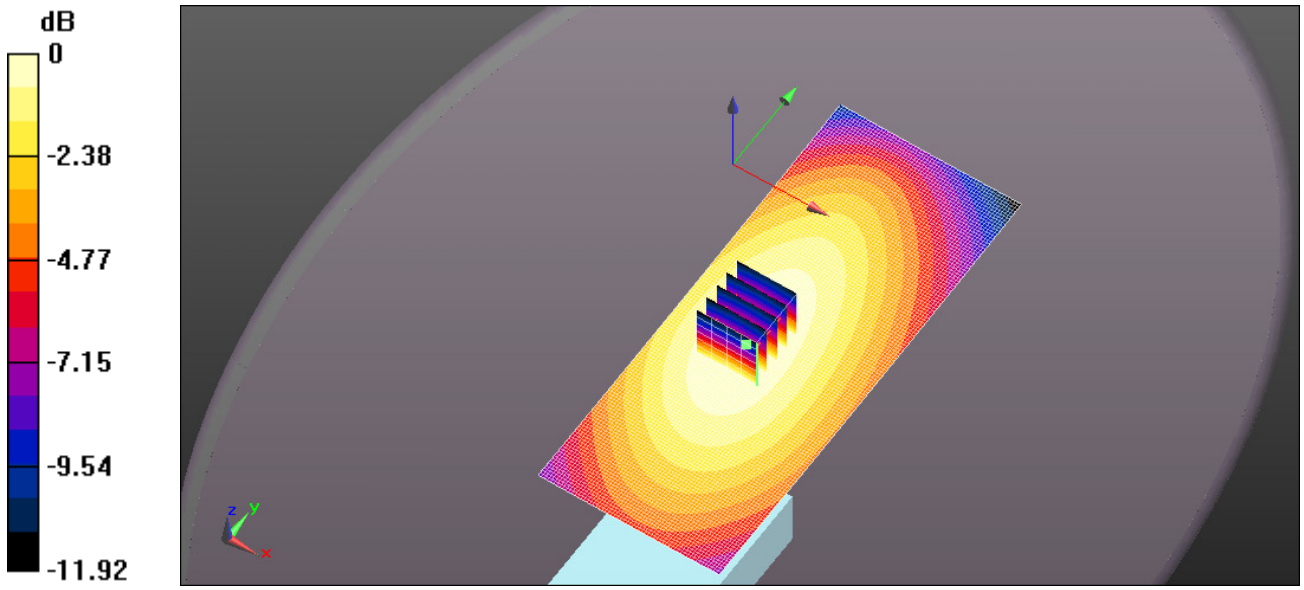

0 dB = 0.938 W/kg = -0.28 dBW/kg

Test Laboratory: Ultratech Group of Labs

FILE NAME: ICOM-435Q BP-284 FA-S67VC 165MHz 174MHz.da52:0

DUT: IC-F3400DT; Type: UHF Transceiver; Serial: 01000151

Communication System: UID 0, CW (0); Frequency: 174 MHz; Duty Cycle: 1:1
Medium parameters used: f = 174 MHz; σ = 0.781 S/m; ε_r = 49.537; ρ = 1000 kg/m^3 ; Phantom section: Flat Section ; Measurement Standard: DASY5 (IEEE/IEC/ANSI C63.19-2007)

DASY Configuration:

- Probe: ES3DV3 - SN3250; ConvF(7.57, 7.57, 7.57); Calibrated: 3/22/2016;
- Sensor-Surface: 3mm (Mechanical Surface Detection)
- Electronics: DAE4 Sn874; Calibrated: 8/24/2015
- Phantom: ELI 4.0; Type: QD OVA 001 BB; Serial: 1057
- DASY52 52.8.8(1222); SEMCAD X 14.6.10(7331)

Configuration_Head_IC-F3400DT/Head Front, P=5W, d=25mm/Area Scan (61x151x1):

Interpolated grid: dx=1.500 mm, dy=1.500 mm
Maximum value of SAR (interpolated) = 1.80 W/kg

Configuration_Head_IC-F3400DT/Head Front, P=5W, d=25mm/Zoom Scan (5x5x7) (5x5x7)/Cube 0:

Measurement grid: dx=7.5mm, dy=7.5mm, dz=5mm
Reference Value = 14.38 V/m; Power Drift = -0.04 dB
Peak SAR (extrapolated) = 2.30 W/kg
SAR(1 g) = 1.61 W/kg; SAR(10 g) = 1.21 W/kg (SAR corrected for target medium)
Maximum value of SAR (measured) = 1.80 W/kg

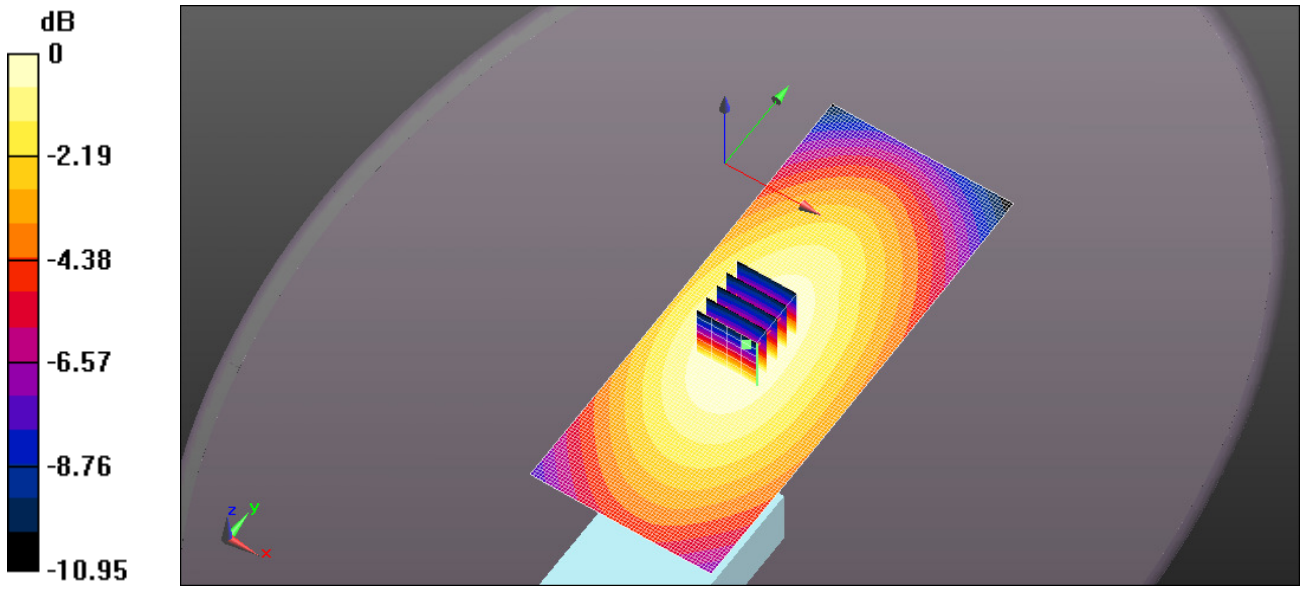

0 dB = 1.80 W/kg = 2.55 dBW/kg

Test Laboratory: Ultratech Group of Labs

FILE NAME: ICOM-435Q BP-284 FA-S67VC 170MHz 150MHz.da52:0

DUT: IC-F3400DT; Type: UHF Transceiver; Serial: 01000151

Communication System: UID 0, CW (0); Frequency: 150 MHz; Duty Cycle: 1:1
Medium parameters used: f = 150 MHz; σ = 0.762 S/m; ε_r = 50.524; ρ = 1000 kg/m^3 ; Phantom section: Flat Section ; Measurement Standard: DASY5 (IEEE/IEC/ANSI C63.19-2007)

DASY Configuration:

- Probe: ES3DV3 - SN3250; ConvF(7.57, 7.57, 7.57); Calibrated: 3/22/2016;
- Sensor-Surface: 3mm (Mechanical Surface Detection)
- Electronics: DAE4 Sn874; Calibrated: 8/24/2015
- Phantom: ELI 4.0; Type: QD OVA 001 BB; Serial: 1057
- DASY52 52.8.8(1222); SEMCAD X 14.6.10(7331)

Configuration_Head_IC-F3400DT/Head Front, P=5W, d=25mm/Area Scan (61x151x1):

Interpolated grid: dx=1.500 mm, dy=1.500 mm
Maximum value of SAR (interpolated) = 0.126 W/kg

Configuration_Head_IC-F3400DT/Head Front, P=5W, d=25mm/Zoom Scan (5x5x7) (5x5x7)/Cube 0:

Measurement grid: dx=7.5mm, dy=7.5mm, dz=5mm
Reference Value = 3.196 V/m; Power Drift = -0.09 dB
Peak SAR (extrapolated) = 0.160 W/kg
SAR(1 g) = 0.111 W/kg; SAR(10 g) = 0.085 W/kg (SAR corrected for target medium)
Maximum value of SAR (measured) = 0.125 W/kg

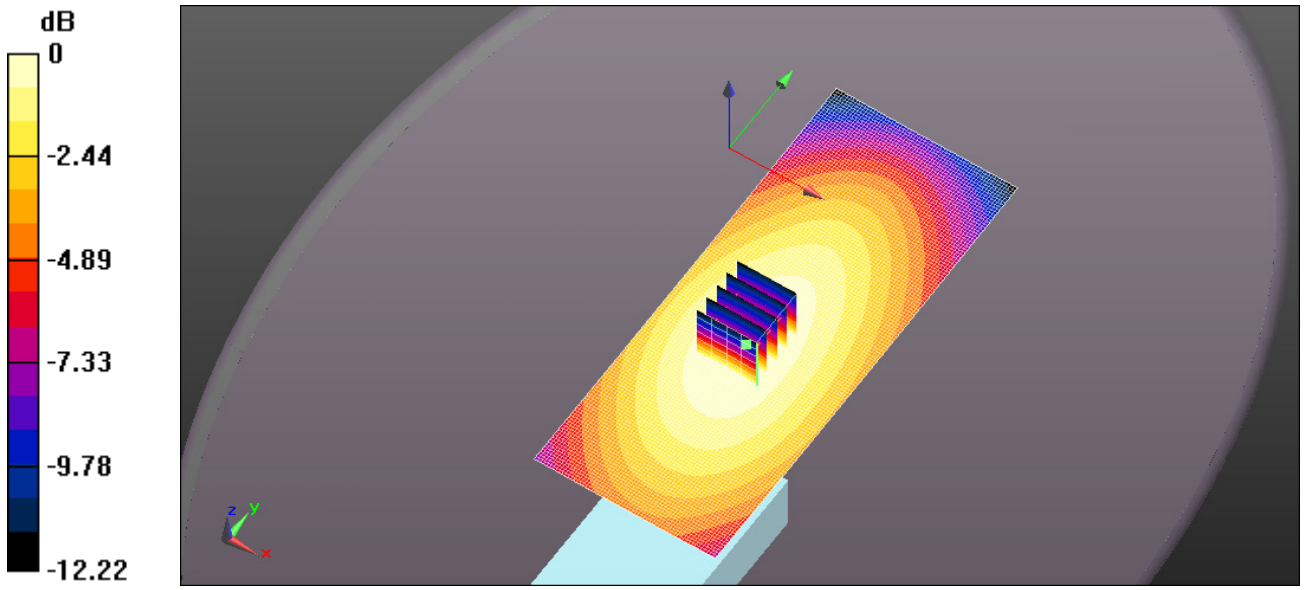

0 dB = 0.126 W/kg = -8.99 dBW/kg

Test Laboratory: Ultratech Group of Labs

FILE NAME: ICOM-435Q BP-284 FA-S67VC 170MHz 156MHz.da52:0

DUT: IC-F3400DT; Type: UHF Transceiver; Serial: 01000151

Communication System: UID 0, CW (0); Frequency: 156 MHz; Duty Cycle: 1:1
Medium parameters used: f = 156 MHz; σ = 0.769 S/m; ε_r = 50.103; ρ = 1000 kg/m^3 ; Phantom section: Flat Section ; Measurement Standard: DASY5 (IEEE/IEC/ANSI C63.19-2007)

DASY Configuration:

- Probe: ES3DV3 - SN3250; ConvF(7.57, 7.57, 7.57); Calibrated: 3/22/2016;
- Sensor-Surface: 3mm (Mechanical Surface Detection)
- Electronics: DAE4 Sn874; Calibrated: 8/24/2015
- Phantom: ELI 4.0; Type: QD OVA 001 BB; Serial: 1057
- DASY52 52.8.8(1222); SEMCAD X 14.6.10(7331)

Configuration_Head_IC-F3400DT/Head Front, P=5W, d=25mm/Area Scan (61x151x1):

Interpolated grid: dx=1.500 mm, dy=1.500 mm
Maximum value of SAR (interpolated) = 0.215 W/kg

Configuration_Head_IC-F3400DT/Head Front, P=5W, d=25mm/Zoom Scan (5x5x7) (5x5x7)/Cube 0:

Measurement grid: dx=7.5mm, dy=7.5mm, dz=5mm
Reference Value = 5.036 V/m; Power Drift = -0.00 dB
Peak SAR (extrapolated) = 0.275 W/kg
SAR(1 g) = 0.194 W/kg; SAR(10 g) = 0.147 W/kg (SAR corrected for target medium)
Maximum value of SAR (measured) = 0.216 W/kg

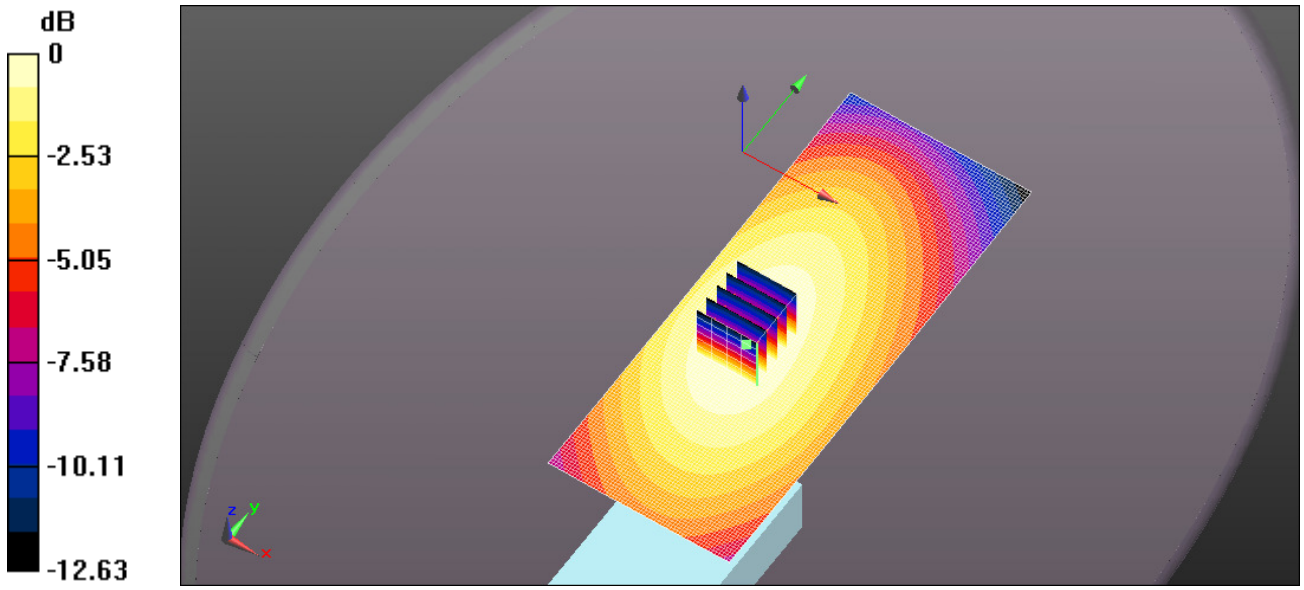

0 dB = 0.215 W/kg = -6.67 dBW/kg

Test Laboratory: Ultratech Group of Labs

FILE NAME: ICOM-435Q BP-284 FA-S67VC 170MHz 162MHz.da52:0

DUT: IC-F3400DT; Type: UHF Transceiver; Serial: 01000151

Communication System: UID 0, CW (0); Frequency: 162 MHz; Duty Cycle: 1:1
Medium parameters used: f = 162 MHz; σ = 0.771 S/m; ε_r = 50.035; ρ = 1000 kg/m^3 ; Phantom section: Flat Section ; Measurement Standard: DASY5 (IEEE/IEC/ANSI C63.19-2007)

DASY Configuration:

- Probe: ES3DV3 - SN3250; ConvF(7.57, 7.57, 7.57); Calibrated: 3/22/2016;
- Sensor-Surface: 3mm (Mechanical Surface Detection)
- Electronics: DAE4 Sn874; Calibrated: 8/24/2015
- Phantom: ELI 4.0; Type: QD OVA 001 BB; Serial: 1057
- DASY52 52.8.8(1222); SEMCAD X 14.6.10(7331)

Configuration_Head_IC-F3400DT/Head Front, P=5W, d=25mm/Area Scan (61x151x1):

Interpolated grid: dx=1.500 mm, dy=1.500 mm
Maximum value of SAR (interpolated) = 0.367 W/kg

Configuration_Head_IC-F3400DT/Head Front, P=5W, d=25mm/Zoom Scan (5x5x7) (5x5x7)/Cube 0:

Measurement grid: dx=7.5mm, dy=7.5mm, dz=5mm
Reference Value = 6.170 V/m; Power Drift = 0.03 dB
Peak SAR (extrapolated) = 0.475 W/kg
SAR(1 g) = 0.331 W/kg; SAR(10 g) = 0.249 W/kg (SAR corrected for target medium)
Maximum value of SAR (measured) = 0.370 W/kg

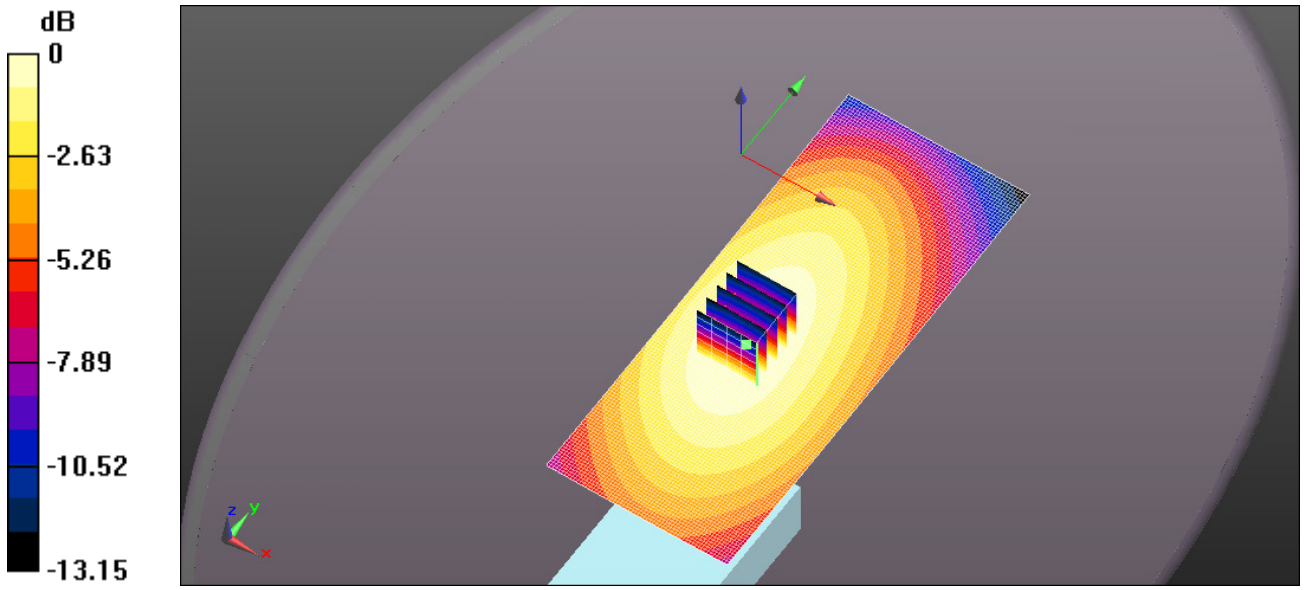

0 dB = 0.367 W/kg = -4.35 dBW/kg

Test Laboratory: Ultratech Group of Labs

FILE NAME: ICOM-435Q BP-284 FA-S67VC 170MHz 168MHz.da52:0

DUT: IC-F3400DT; Type: UHF Transceiver; Serial: 01000151

Communication System: UID 0, CW (0); Frequency: 168 MHz; Duty Cycle: 1:1
Medium parameters used: f = 168 MHz; σ = 0.773 S/m; ε_r = 49.612; ρ = 1000 kg/m^3 ; Phantom section: Flat Section ; Measurement Standard: DASY5 (IEEE/IEC/ANSI C63.19-2007)

DASY Configuration:

- Probe: ES3DV3 - SN3250; ConvF(7.57, 7.57, 7.57); Calibrated: 3/22/2016;
- Sensor-Surface: 3mm (Mechanical Surface Detection)
- Electronics: DAE4 Sn874; Calibrated: 8/24/2015
- Phantom: ELI 4.0; Type: QD OVA 001 BB; Serial: 1057
- DASY52 52.8.8(1222); SEMCAD X 14.6.10(7331)

Configuration_Head_IC-F3400DT/Head Front, P=5W, d=25mm/Area Scan (61x151x1):

Interpolated grid: dx=1.500 mm, dy=1.500 mm
Maximum value of SAR (interpolated) = 0.657 W/kg

Configuration_Head_IC-F3400DT/Head Front, P=5W, d=25mm/Zoom Scan (5x5x7) (5x5x7)/Cube 0:

Measurement grid: dx=7.5mm, dy=7.5mm, dz=5mm
Reference Value = 8.868 V/m; Power Drift = -0.29 dB
Peak SAR (extrapolated) = 0.895 W/kg
SAR(1 g) = 0.607 W/kg; SAR(10 g) = 0.450 W/kg (SAR corrected for target medium)
Maximum value of SAR (measured) = 0.663 W/kg

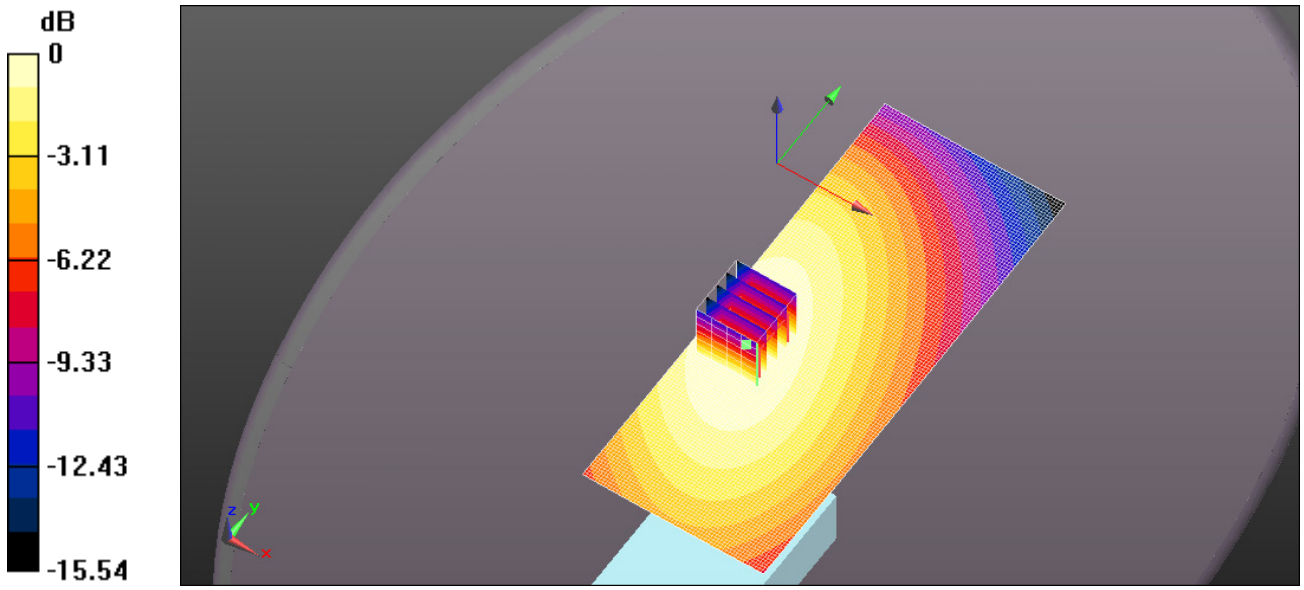

0 dB = 0.657 W/kg = -1.82 dBW/kg

Test Laboratory: Ultratech Group of Labs

FILE NAME: ICOM-435Q BP-284 FA-S67VC 170MHz 174MHz.da52:0

DUT: IC-F3400DT; Type: UHF Transceiver; Serial: 01000151

Communication System: UID 0, CW (0); Frequency: 174 MHz; Duty Cycle: 1:1
Medium parameters used: f = 174 MHz; σ = 0.781 S/m; ε_r = 49.537; ρ = 1000 kg/m^3 ; Phantom section: Flat Section ; Measurement Standard: DASY5 (IEEE/IEC/ANSI C63.19-2007)

DASY Configuration:

- Probe: ES3DV3 - SN3250; ConvF(7.57, 7.57, 7.57); Calibrated: 3/22/2016;
- Sensor-Surface: 3mm (Mechanical Surface Detection)
- Electronics: DAE4 Sn874; Calibrated: 8/24/2015
- Phantom: ELI 4.0; Type: QD OVA 001 BB; Serial: 1057
- DASY52 52.8.8(1222); SEMCAD X 14.6.10(7331)

Configuration_Head_IC-F3400DT/Head Front, P=5W, d=25mm/Area Scan (61x151x1):

Interpolated grid: dx=1.500 mm, dy=1.500 mm
Maximum value of SAR (interpolated) = 1.56 W/kg

Configuration_Head_IC-F3400DT/Head Front, P=5W, d=25mm/Zoom Scan (5x5x7) (5x5x7)/Cube 0:

Measurement grid: dx=7.5mm, dy=7.5mm, dz=5mm
Reference Value = 12.05 V/m; Power Drift = -0.03 dB
Peak SAR (extrapolated) = 2.00 W/kg
SAR(1 g) = 1.4 W/kg; SAR(10 g) = 1.05 W/kg (SAR corrected for target medium)
Maximum value of SAR (measured) = 1.56 W/kg

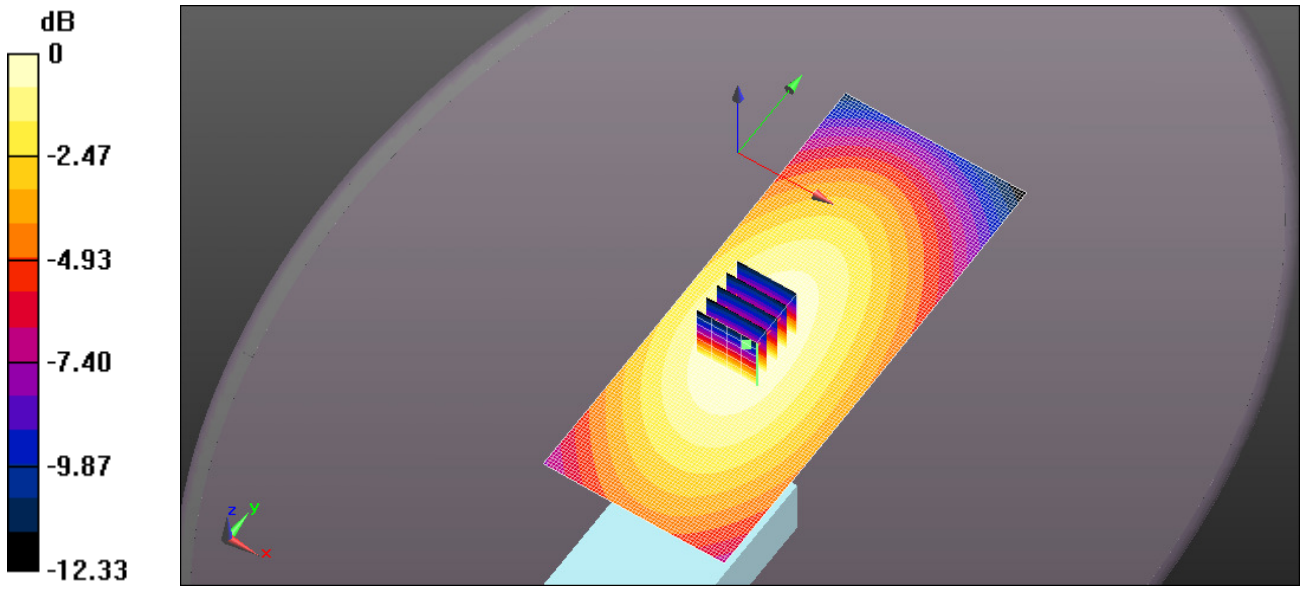

0 dB = 1.56 W/kg = 1.93 dBW/kg

EXHIBIT 3. BODY SAR MEASUREMENT SUMMARY

Antenna	Power (dBm)	CH	CH. Freq	BODY SAR1g (W/Kg)	BODY SAR10g (W/Kg)
				BP-283	BP-283
			(MHz)	2010mAh	2010mAh
FA-S81V 136-150 MHz	37.02	1	136	1.19	0.89
	36.97	2	143	0.92	0.70
	37.03	3	150	0.26	0.20
FA-S82V 150-162 MHz	37.03	3	150	2.02	1.52
	37.03	4	156	0.85	0.64
	37.07	6	162	0.33	0.25
FA-S83V 160-174 MHz	37.05	5	160	1.98	1.49
	37.12	7	167	1.35	1.02
	37.12	8	174	0.57	0.37
FA-S81VS 136-150 MHz	37.02	1	136	0.17	0.13
	36.97	2	143	1.28	0.95
	37.03	3	150	0.14	0.10
FA-S82VS 150-162 MHz	37.03	3	150	0.81	0.60
	37.03	4	156	0.47	0.35
	37.07	6	162	0.11	0.08
FA-S83VS 160-174 MHz	37.05	5	160	0.27	0.20
	37.12	7	167	0.88	0.65
	37.12	8	174	0.14	0.10

Antenna	Power (dBm)	CH	CH. Freq	BODY SAR1g (W/Kg)	BODY SAR10g (W/Kg)
				BP-283	BP-283
			(MHz)	2010mAh	2010mAh
FA-S67VC 150MHz	37.03	3	150	0.90	0.68
	37.03	4	156		
	37.05	6	162	0.47	0.35
	37.07	8	168		
	37.13	9	174	0.11	0.09
FA-S67VC 155MHz	37.03	3	150	0.33	0.24
	37.03	4	156		
	37.05	6	162	0.80	0.60
	37.07	8	168		
	37.13	9	174	0.31	0.20
FA-S67VC 160MHz	37.03	3	150	0.16	0.12
	37.03	4	156		
	37.05	6	162	0.66	0.49
	37.07	8	168		
	37.13	9	174	0.86	0.64
FA-S67VC 165MHz	37.03	3	150	0.11	0.08
	37.03	4	156		
	37.05	6	162	0.41	0.31
	37.07	8	168		
	37.13	9	174	1.15	0.86
FA-S67VC 170MHz	37.03	3	150	0.09	0.07
	37.03	4	156		
	37.05	6	162	0.34	0.26
	37.07	8	168		
	37.13	9	174	1.17	0.88

Test Laboratory: Ultratech Group of Labs

FILE NAME: ICOM-435Q BP-283 FA-S81V 136MHz.da52:0

DUT: IC-F3400DT; Type: UHF Transceiver; Serial: 01000151

Communication System: UID 0, CW (0); Frequency: 136 MHz; Duty Cycle: 1:1
Medium parameters used: f = 136 MHz; σ = 0.807 S/m; ε_r = 61.788; ρ = 1000 kg/m^3 ; Phantom section: Flat Section ; Measurement Standard: DASY5 (IEEE/IEC/ANSI C63.19-2007)

DASY Configuration:

- Probe: ES3DV3 - SN3250; ConvF(7.18, 7.18, 7.18); Calibrated: 3/22/2016;
- Sensor-Surface: 3mm (Mechanical Surface Detection)
- Electronics: DAE4 Sn874; Calibrated: 8/24/2015
- Phantom: ELI 4.0; Type: QD OVA 001 BB; Serial: 1057
- DASY52 52.8.8(1222); SEMCAD X 14.6.10(7331)

Configuration_Body_IC-F3400DT/Body Back, P=5W, d=0mm/Area Scan (61x151x1):

Interpolated grid: dx=1.500 mm, dy=1.500 mm
Maximum value of SAR (interpolated) = 2.72 W/kg

Configuration_Body_IC-F3400DT/Body Back, P=5W, d=0mm/Zoom Scan (5x5x7) (6x7x7)/Cube 0:

Measurement grid: dx=7.5mm, dy=7.5mm, dz=5mm
Reference Value = 57.51 V/m; Power Drift = -0.13 dB
Peak SAR (extrapolated) = 3.70 W/kg
SAR(1 g) = 2.37 W/kg; SAR(10 g) = 1.77 W/kg (SAR corrected for target medium)
Maximum value of SAR (measured) = 2.66 W/kg

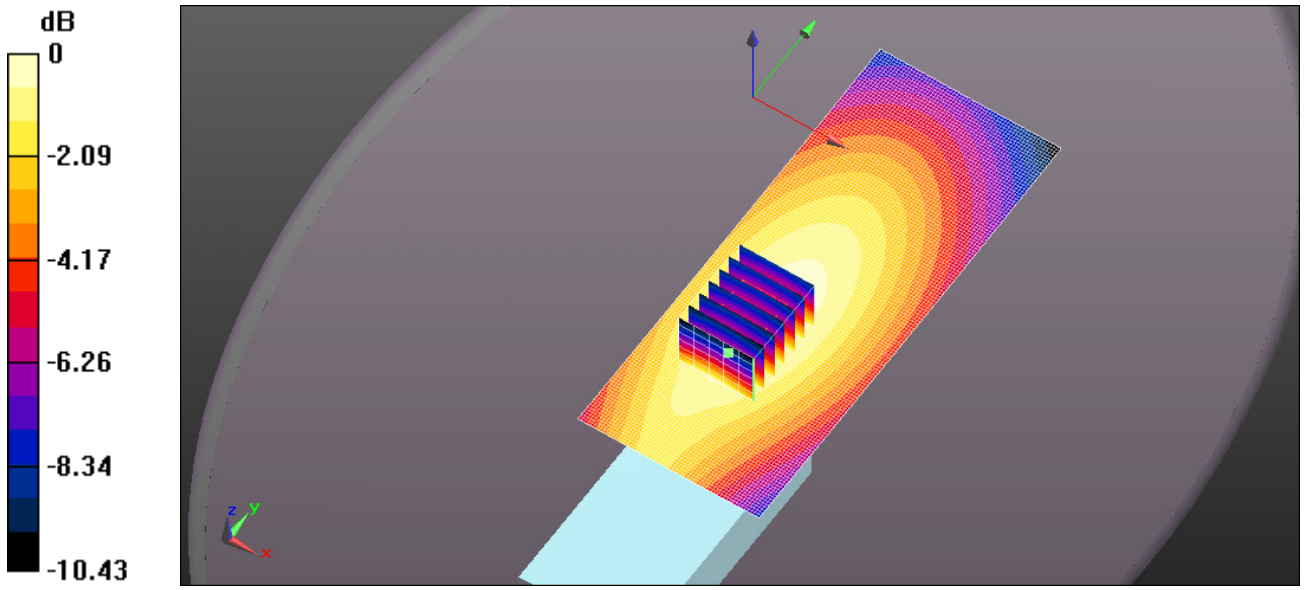

0 dB = 2.72 W/kg = 4.35 dBW/kg

Test Laboratory: Ultratech Group of Labs

FILE NAME: ICOM-435Q BP-283 FA-S81V 143MHz.da52:0

DUT: IC-F3400DT; Type: UHF Transceiver; Serial: 01000151

Communication System: UID 0, CW (0); Frequency: 143 MHz; Duty Cycle: 1:1
Medium parameters used (interpolated): f = 143 MHz; σ = 0.812 S/m; ε_r = 61.834; ρ = 1000 kg/m^3 ;
Phantom section: Flat Section ; Measurement Standard: DASY5 (IEEE/IEC/ANSI C63.19-2007)

DASY Configuration:

- Probe: ES3DV3 - SN3250; ConvF(7.18, 7.18, 7.18); Calibrated: 3/22/2016;
- Sensor-Surface: 3mm (Mechanical Surface Detection)
- Electronics: DAE4 Sn874; Calibrated: 8/24/2015
- Phantom: ELI 4.0; Type: QD OVA 001 BB; Serial: 1057
- DASY52 52.8.8(1222); SEMCAD X 14.6.10(7331)

Configuration_Body_IC-F3400DT/Body Back, P=5W, d=0mm/Area Scan (61x151x1):

Interpolated grid: dx=1.500 mm, dy=1.500 mm
Maximum value of SAR (interpolated) = 2.03 W/kg

Configuration_Body_IC-F3400DT/Body Back, P=5W, d=0mm/Zoom Scan (5x5x7) (5x5x7)/Cube 0:

Measurement grid: dx=7.5mm, dy=7.5mm, dz=5mm
Reference Value = 20.09 V/m; Power Drift = -0.04 dB
Peak SAR (extrapolated) = 2.61 W/kg
SAR(1 g) = 1.83 W/kg; SAR(10 g) = 1.39 W/kg (SAR corrected for target medium)
Maximum value of SAR (measured) = 2.04 W/kg

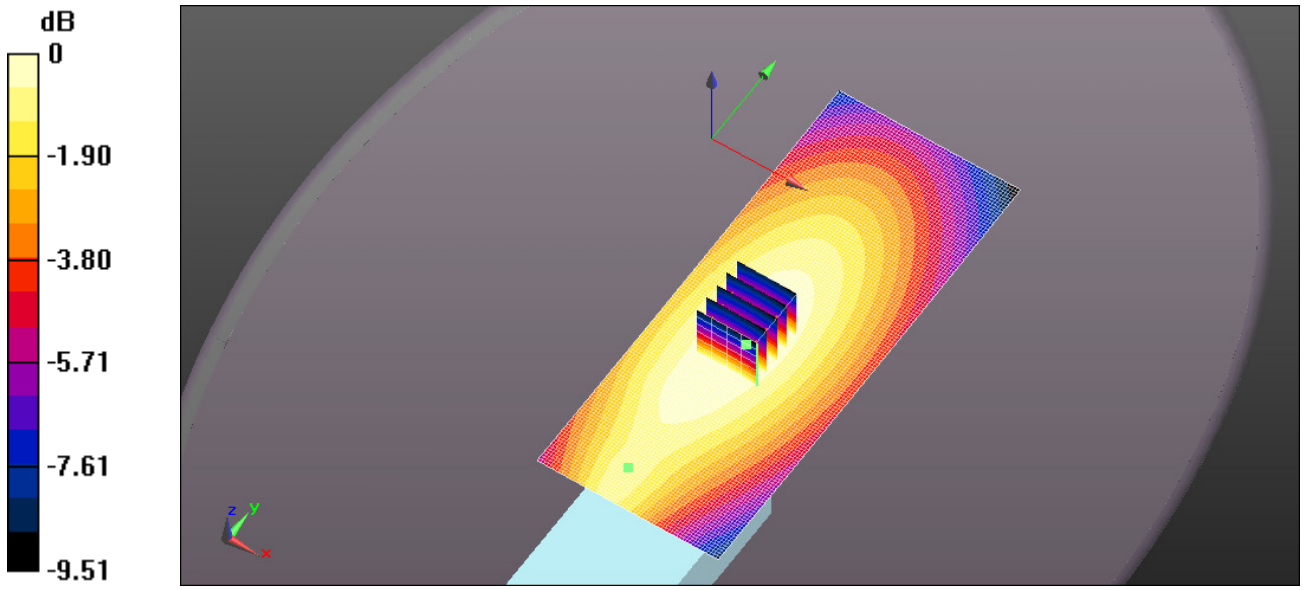

0 dB = 2.03 W/kg = 3.07 dBW/kg

Test Laboratory: Ultratech Group of Labs

FILE NAME: ICOM-435Q BP-283 FA-S81V 150MHz.da52:0

DUT: IC-F3400DT; Type: UHF Transceiver; Serial: 01000151

Communication System: UID 0, CW (0); Frequency: 150 MHz; Duty Cycle: 1:1
Medium parameters used: f = 150 MHz; σ = 0.818 S/m; ε_r = 62.016; ρ = 1000 kg/m^3 ; Phantom section: Flat Section ; Measurement Standard: DASY5 (IEEE/IEC/ANSI C63.19-2007)

DASY Configuration:

- Probe: ES3DV3 - SN3250; ConvF(7.18, 7.18, 7.18); Calibrated: 3/22/2016;
- Sensor-Surface: 3mm (Mechanical Surface Detection)
- Electronics: DAE4 Sn874; Calibrated: 8/24/2015
- Phantom: ELI 4.0; Type: QD OVA 001 BB; Serial: 1057
- DASY52 52.8.8(1222); SEMCAD X 14.6.10(7331)

Configuration_Body_IC-F3400DT/Body Back, P=5W, d=0mm/Area Scan (61x151x1):

Interpolated grid: dx=1.500 mm, dy=1.500 mm
Maximum value of SAR (interpolated) = 0.547 W/kg

Configuration_Body_IC-F3400DT/Body Back, P=5W, d=0mm/Zoom Scan (5x5x7) (5x5x7)/Cube 0:

Measurement grid: dx=7.5mm, dy=7.5mm, dz=5mm
Reference Value = 9.292 V/m; Power Drift = -0.04 dB
Peak SAR (extrapolated) = 0.708 W/kg
SAR(1 g) = 0.485 W/kg; SAR(10 g) = 0.367 W/kg (SAR corrected for target medium)
Maximum value of SAR (measured) = 0.550 W/kg

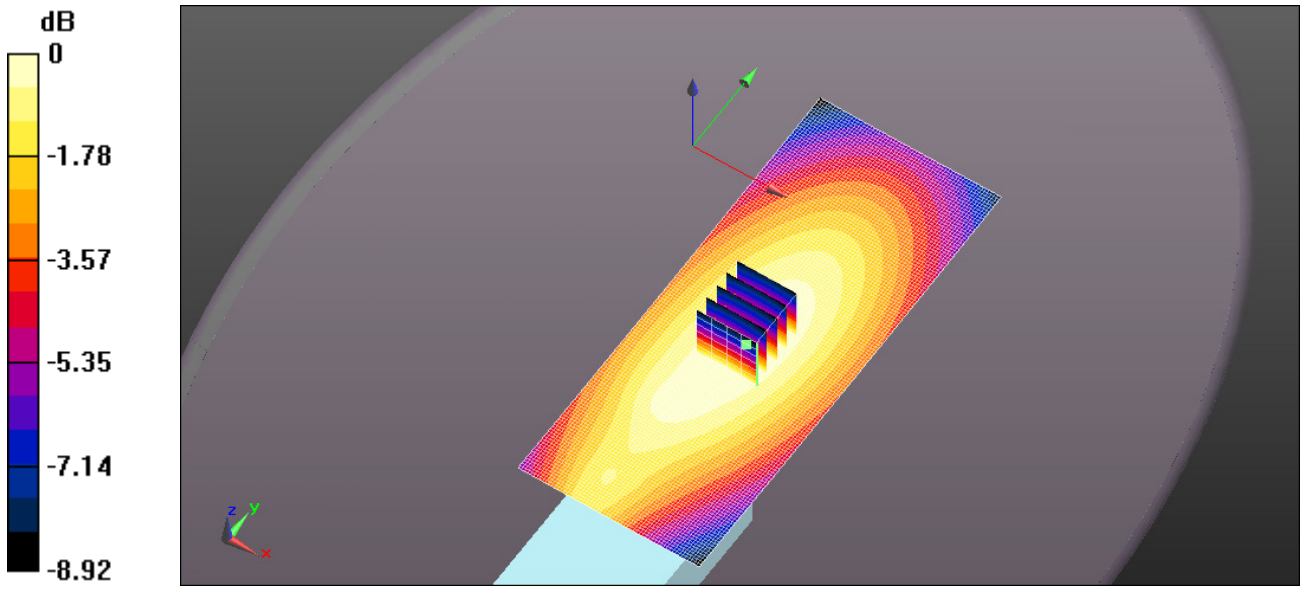

0 dB = 0.547 W/kg = -2.62 dBW/kg

Test Laboratory: Ultratech Group of Labs

FILE NAME: ICOM-435Q BP-283 FA-S82V 150MHz.da52:0

DUT: IC-F3400DT; Type: UHF Transceiver; Serial: 01000151

Communication System: UID 0, CW (0); Frequency: 150 MHz; Duty Cycle: 1:1
Medium parameters used: f = 150 MHz; σ = 0.818 S/m; ε_r = 62.016; ρ = 1000 kg/m^3 ; Phantom section: Flat Section ; Measurement Standard: DASY5 (IEEE/IEC/ANSI C63.19-2007)

DASY Configuration:

- Probe: ES3DV3 - SN3250; ConvF(7.18, 7.18, 7.18); Calibrated: 3/22/2016;
- Sensor-Surface: 3mm (Mechanical Surface Detection)
- Electronics: DAE4 Sn874; Calibrated: 8/24/2015
- Phantom: ELI 4.0; Type: QD OVA 001 BB; Serial: 1057
- DASY52 52.8.8(1222); SEMCAD X 14.6.10(7331)

Configuration_Body_IC-F3400DT/Body Back, P=5W, d=0mm/Area Scan (61x151x1):

Interpolated grid: dx=1.500 mm, dy=1.500 mm
Maximum value of SAR (interpolated) = 4.54 W/kg

Configuration_Body_IC-F3400DT/Body Back, P=5W, d=0mm/Zoom Scan (5x5x7) (5x5x7)/Cube 0:

Measurement grid: dx=7.5mm, dy=7.5mm, dz=5mm
Reference Value = 26.23 V/m; Power Drift = -0.05 dB
Peak SAR (extrapolated) = 5.88 W/kg
SAR(1 g) = 4.03 W/kg; SAR(10 g) = 3.04 W/kg (SAR corrected for target medium)
Maximum value of SAR (measured) = 4.57 W/kg

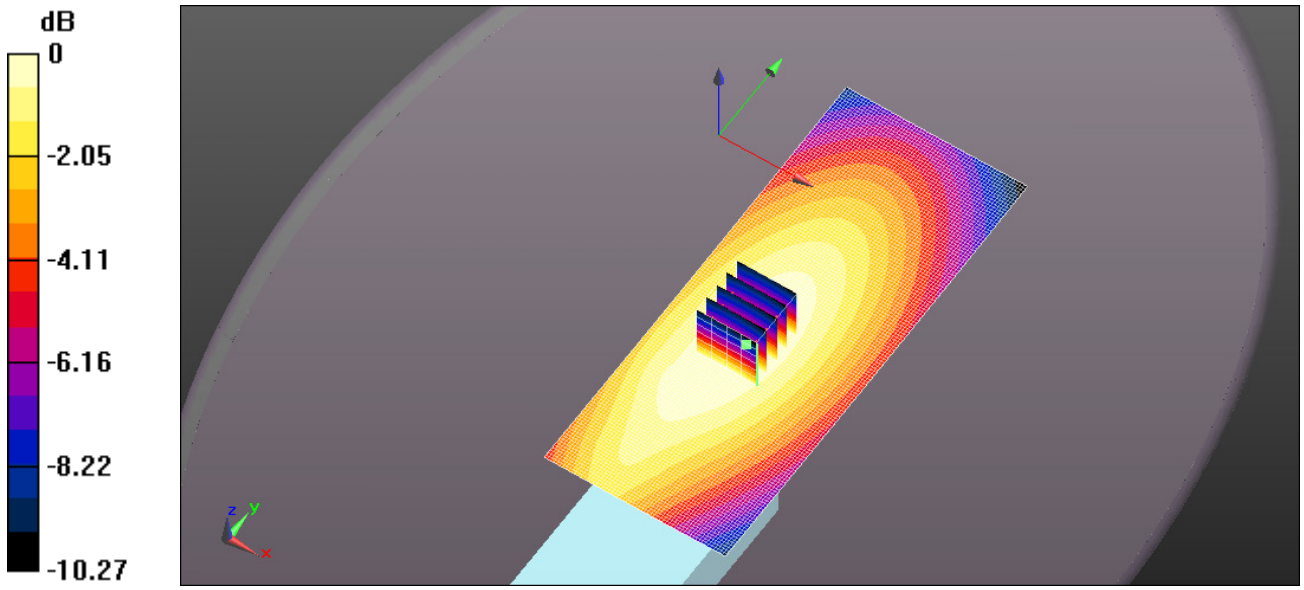

0 dB = 4.54 W/kg = 6.57 dBW/kg

Test Laboratory: Ultratech Group of Labs

FILE NAME: ICOM-435Q BP-283 FA-S82V 156MHz.da52:0

DUT: IC-F3400DT; Type: UHF Transceiver; Serial: 01000151

Communication System: UID 0, CW (0); Frequency: 156 MHz; Duty Cycle: 1:1
Medium parameters used: f = 156 MHz; σ = 0.824 S/m; ε_r = 62.185; ρ = 1000 kg/m^3 ; Phantom section: Flat Section ; Measurement Standard: DASY5 (IEEE/IEC/ANSI C63.19-2007)

DASY Configuration:

- Probe: ES3DV3 - SN3250; ConvF(7.18, 7.18, 7.18); Calibrated: 3/22/2016;
- Sensor-Surface: 3mm (Mechanical Surface Detection)
- Electronics: DAE4 Sn874; Calibrated: 8/24/2015
- Phantom: ELI 4.0; Type: QD OVA 001 BB; Serial: 1057
- DASY52 52.8.8(1222); SEMCAD X 14.6.10(7331)

Configuration_Body_IC-F3400DT/Body Back, P=5W, d=0mm/Area Scan (61x151x1):

Interpolated grid: dx=1.500 mm, dy=1.500 mm
Maximum value of SAR (interpolated) = 1.89 W/kg

Configuration_Body_IC-F3400DT/Body Back, P=5W, d=0mm/Zoom Scan (5x5x7) (6x6x7)/Cube 0:

Measurement grid: dx=7.5mm, dy=7.5mm, dz=5mm
Reference Value = 15.25 V/m; Power Drift = -0.04 dB
Peak SAR (extrapolated) = 2.46 W/kg
SAR(1 g) = 1.69 W/kg; SAR(10 g) = 1.27 W/kg (SAR corrected for target medium)
Maximum value of SAR (measured) = 1.89 W/kg

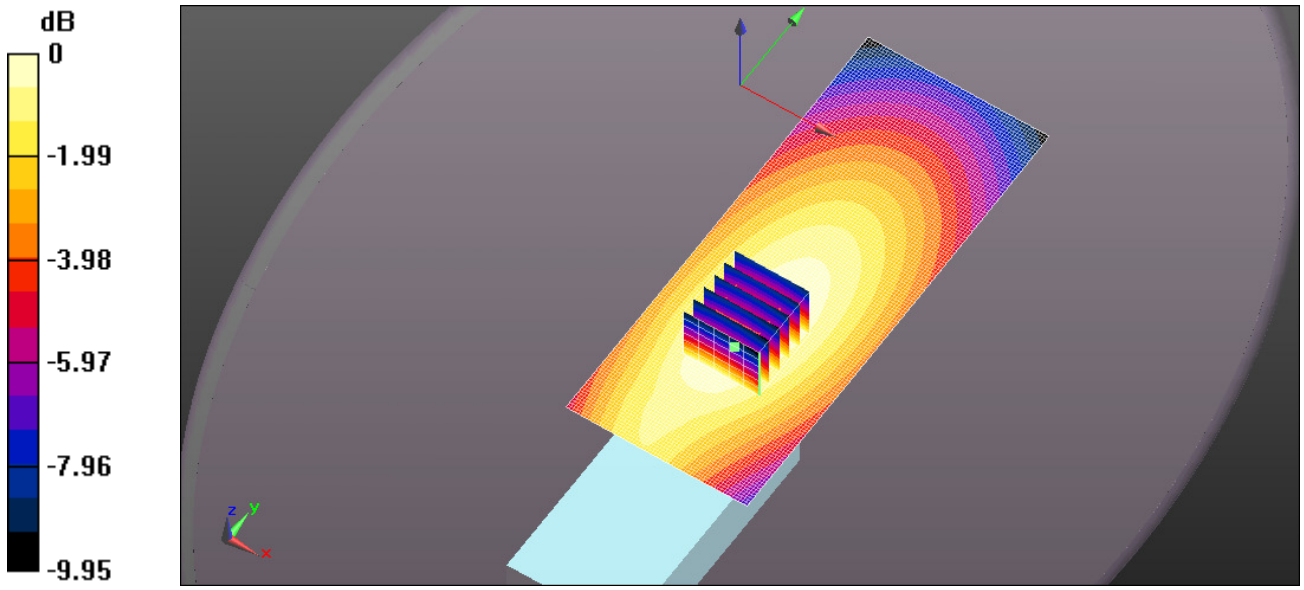

0 dB = 1.89 W/kg = 2.76 dBW/kg

Test Laboratory: Ultratech Group of Labs

FILE NAME: ICOM-435Q BP-283 FA-S82V 162MHz.da52:0

DUT: IC-F3400DT; Type: UHF Transceiver; Serial: 01000151

Communication System: UID 0, CW (0); Frequency: 162 MHz; Duty Cycle: 1:1
Medium parameters used: f = 162 MHz; σ = 0.831 S/m; ε_r = 61.939; ρ = 1000 kg/m^3 ; Phantom section: Flat Section ; Measurement Standard: DASY5 (IEEE/IEC/ANSI C63.19-2007)

DASY Configuration:

- Probe: ES3DV3 - SN3250; ConvF(7.18, 7.18, 7.18); Calibrated: 3/22/2016;
- Sensor-Surface: 3mm (Mechanical Surface Detection)
- Electronics: DAE4 Sn874; Calibrated: 8/24/2015
- Phantom: ELI 4.0; Type: QD OVA 001 BB; Serial: 1057
- DASY52 52.8.8(1222); SEMCAD X 14.6.10(7331)

Configuration_Body_IC-F3400DT/Body Back, P=5W, d=0mm/Area Scan (61x151x1):

Interpolated grid: dx=1.500 mm, dy=1.500 mm
Maximum value of SAR (interpolated) = 0.730 W/kg

Configuration_Body_IC-F3400DT/Body Back, P=5W, d=0mm/Zoom Scan (5x5x7) (5x5x7)/Cube 0:

Measurement grid: dx=7.5mm, dy=7.5mm, dz=5mm
Reference Value = 10.99 V/m; Power Drift = -0.05 dB
Peak SAR (extrapolated) = 0.938 W/kg
SAR(1 g) = 0.655 W/kg; SAR(10 g) = 0.494 W/kg (SAR corrected for target medium)
Maximum value of SAR (measured) = 0.730 W/kg

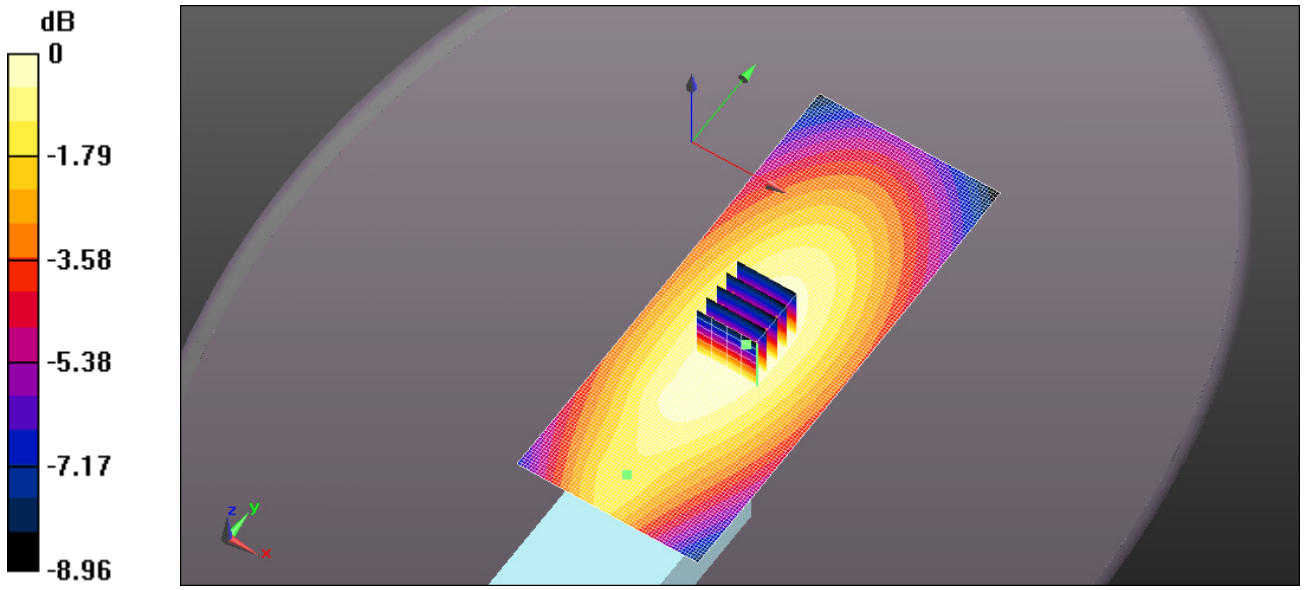

0 dB = 0.730 W/kg = -1.37 dBW/kg

Test Laboratory: Ultratech Group of Labs

FILE NAME: ICOM-435Q BP-283 FA-S83V 160MHz.da52:0

DUT: IC-F3400DT; Type: UHF Transceiver; Serial: 01000151

Communication System: UID 0, CW (0); Frequency: 160 MHz; Duty Cycle: 1:1
Medium parameters used: f = 160 MHz; σ = 0.829 S/m; ε_r = 62.018; ρ = 1000 kg/m^3 ; Phantom section: Flat Section ; Measurement Standard: DASY5 (IEEE/IEC/ANSI C63.19-2007)

DASY Configuration:

- Probe: ES3DV3 - SN3250; ConvF(7.18, 7.18, 7.18); Calibrated: 3/22/2016;
- Sensor-Surface: 3mm (Mechanical Surface Detection)
- Electronics: DAE4 Sn874; Calibrated: 8/24/2015
- Phantom: ELI 4.0; Type: QD OVA 001 BB; Serial: 1057
- DASY52 52.8.8(1222); SEMCAD X 14.6.10(7331)

Configuration_Body_IC-F3400DT/Body Back, P=5W, d=0mm/Area Scan (61x151x1):

Interpolated grid: dx=1.500 mm, dy=1.500 mm
Maximum value of SAR (interpolated) = 4.40 W/kg

Configuration_Body_IC-F3400DT/Body Back, P=5W, d=0mm/Zoom Scan (5x5x7) (5x5x7)/Cube 0:

Measurement grid: dx=7.5mm, dy=7.5mm, dz=5mm
Reference Value = 27.90 V/m; Power Drift = -0.04 dB
Peak SAR (extrapolated) = 5.65 W/kg
SAR(1 g) = 3.95 W/kg; SAR(10 g) = 2.98 W/kg (SAR corrected for target medium)
Maximum value of SAR (measured) = 4.41 W/kg

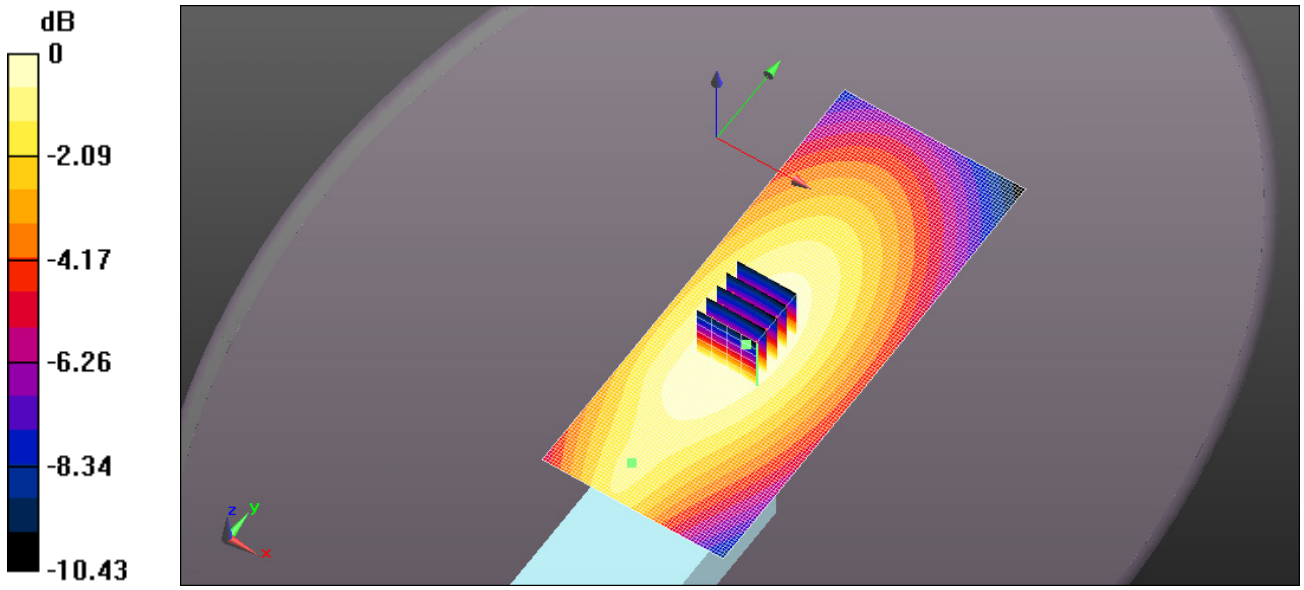

0 dB = 4.40 W/kg = 6.43 dBW/kg

Test Laboratory: Ultratech Group of Labs

FILE NAME: ICOM-435Q BP-283 FA-S83V 167MHz.da52:0

DUT: IC-F3400DT; Type: UHF Transceiver; Serial: 01000151

Communication System: UID 0, CW (0); Frequency: 167 MHz; Duty Cycle: 1:1
Medium parameters used (interpolated): f = 167 MHz; σ = 0.834 S/m; ε_r = 61.988; ρ = 1000 kg/m^3 ;
Phantom section: Flat Section ; Measurement Standard: DASY5 (IEEE/IEC/ANSI C63.19-2007)

DASY Configuration:

- Probe: ES3DV3 - SN3250; ConvF(7.18, 7.18, 7.18); Calibrated: 3/22/2016;
- Sensor-Surface: 3mm (Mechanical Surface Detection)
- Electronics: DAE4 Sn874; Calibrated: 8/24/2015
- Phantom: ELI 4.0; Type: QD OVA 001 BB; Serial: 1057
- DASY52 52.8.8(1222); SEMCAD X 14.6.10(7331)

Configuration_Body_IC-F3400DT/Body Back, P=5W, d=0mm/Area Scan (61x151x1):

Interpolated grid: dx=1.500 mm, dy=1.500 mm
Maximum value of SAR (interpolated) = 3.03 W/kg

Configuration_Body_IC-F3400DT/Body Back, P=5W, d=0mm/Zoom Scan (5x5x7) (6x6x7)/Cube 0:

Measurement grid: dx=7.5mm, dy=7.5mm, dz=5mm
Reference Value = 20.58 V/m; Power Drift = -0.05 dB
Peak SAR (extrapolated) = 3.93 W/kg
SAR(1 g) = 2.7 W/kg; SAR(10 g) = 2.03 W/kg (SAR corrected for target medium)
Maximum value of SAR (measured) = 3.02 W/kg

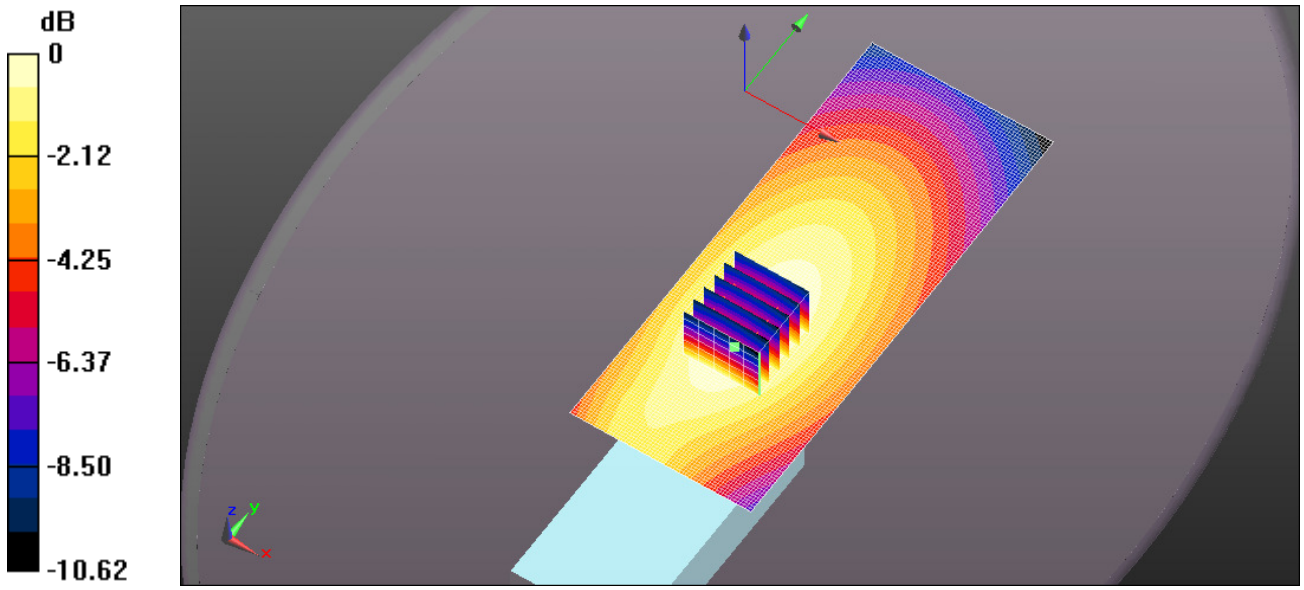

0 dB = 3.03 W/kg = 4.82 dBW/kg

Test Laboratory: Ultratech Group of Labs

FILE NAME: ICOM-435Q BP-283 FA-S83V 174MHz.da52:0

DUT: IC-F3400DT; Type: UHF Transceiver; Serial: 01000151

Communication System: UID 0, CW (0); Frequency: 174 MHz; Duty Cycle: 1:1
Medium parameters used: f = 174 MHz; σ = 0.842 S/m; ε_r = 61.964; ρ = 1000 kg/m^3 ; Phantom section: Flat Section ; Measurement Standard: DASY5 (IEEE/IEC/ANSI C63.19-2007)

DASY Configuration:

- Probe: ES3DV3 - SN3250; ConvF(7.18, 7.18, 7.18); Calibrated: 3/22/2016;
- Sensor-Surface: 3mm (Mechanical Surface Detection)
- Electronics: DAE4 Sn874; Calibrated: 8/24/2015
- Phantom: ELI 4.0; Type: QD OVA 001 BB; Serial: 1057
- DASY52 52.8.8(1222); SEMCAD X 14.6.10(7331)

Configuration_Body_IC-F3400DT/Body Back, P=5W, d=0mm/Area Scan (61x151x1):

Interpolated grid: dx=1.500 mm, dy=1.500 mm
Maximum value of SAR (interpolated) = 1.55 W/kg

Configuration_Body_IC-F3400DT/Body Back, P=5W, d=0mm/Zoom Scan (5x5x7) (6x6x7)/Cube 0:

Measurement grid: dx=7.5mm, dy=7.5mm, dz=5mm
Reference Value = 15.64 V/m; Power Drift = -0.21 dB
Peak SAR (extrapolated) = 1.87 W/kg
SAR(1 g) = 1.14 W/kg; SAR(10 g) = 0.738 W/kg (SAR corrected for target medium)
Maximum value of SAR (measured) = 1.41 W/kg

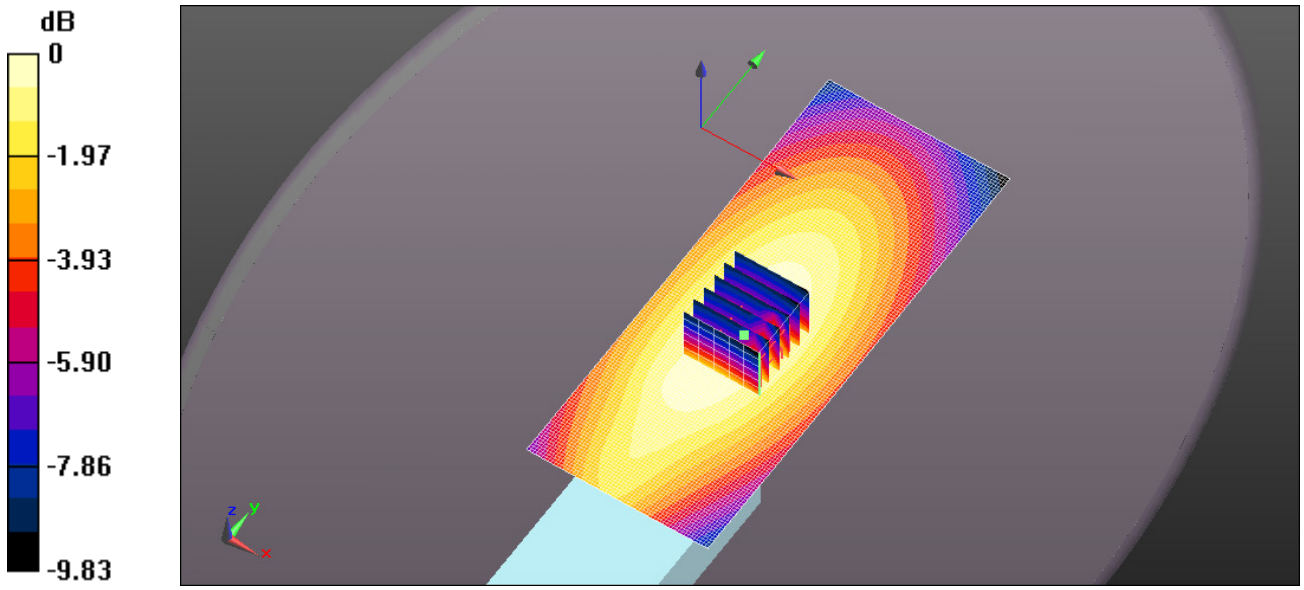

0 dB = 1.55 W/kg = 1.91 dBW/kg

Test Laboratory: Ultratech Group of Labs

FILE NAME: ICOM-435Q BP-283 FA-S81VS 136MHz.da52:0

DUT: IC-F3400DT; Type: UHF Transceiver; Serial: 01000151

Communication System: UID 0, CW (0); Frequency: 136 MHz; Duty Cycle: 1:1
Medium parameters used: f = 136 MHz; σ = 0.807 S/m; ε_r = 61.788; ρ = 1000 kg/m^3 ; Phantom section: Flat Section ; Measurement Standard: DASY5 (IEEE/IEC/ANSI C63.19-2007)

DASY Configuration:

- Probe: ES3DV3 - SN3250; ConvF(7.18, 7.18, 7.18); Calibrated: 3/22/2016;
- Sensor-Surface: 3mm (Mechanical Surface Detection)
- Electronics: DAE4 Sn874; Calibrated: 8/24/2015
- Phantom: ELI 4.0; Type: QD OVA 001 BB; Serial: 1057
- DASY52 52.8.8(1222); SEMCAD X 14.6.10(7331)

Configuration_Body_IC-F3400DT/Body Back, P=5W, d=0mm/Area Scan (61x151x1):

Interpolated grid: dx=1.500 mm, dy=1.500 mm
Maximum value of SAR (interpolated) = 0.390 W/kg

Configuration_Body_IC-F3400DT/Body Back, P=5W, d=0mm/Zoom Scan (5x5x7) (5x7x7)/Cube 0:

Measurement grid: dx=7.5mm, dy=7.5mm, dz=5mm
Reference Value = 1.730 V/m; Power Drift = 0.29 dB
Peak SAR (extrapolated) = 0.533 W/kg
SAR(1 g) = 0.349 W/kg; SAR(10 g) = 0.261 W/kg (SAR corrected for target medium)
Maximum value of SAR (measured) = 0.391 W/kg

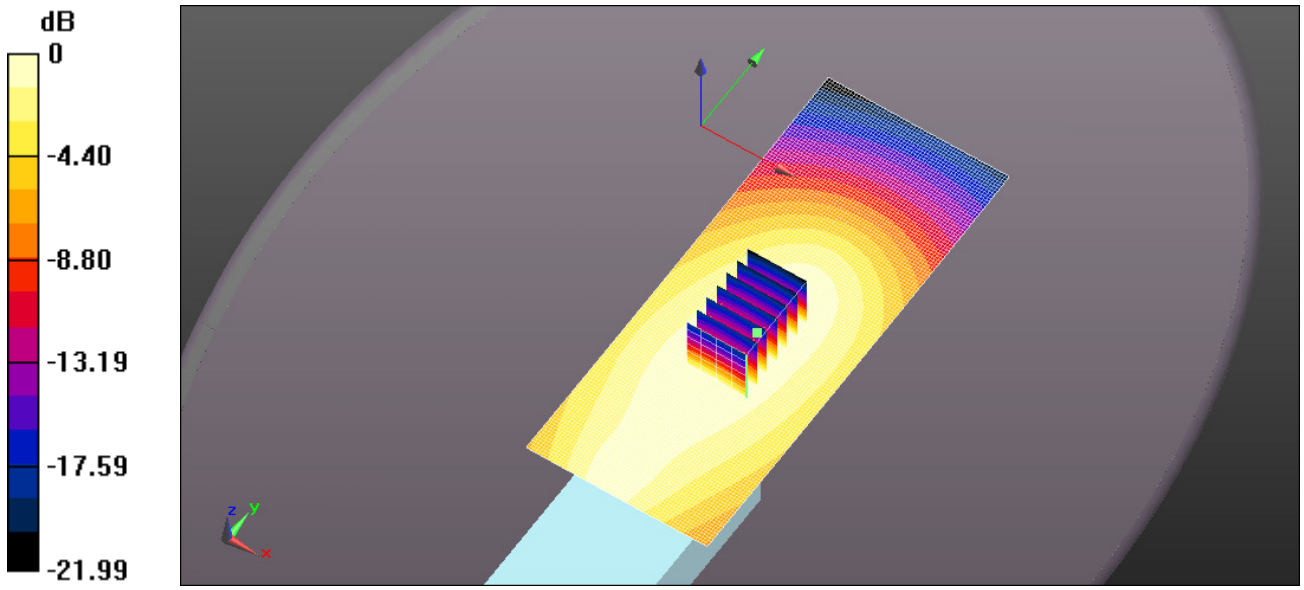

0 dB = 0.390 W/kg = -4.09 dBW/kg

Test Laboratory: Ultratech Group of Labs

FILE NAME: ICOM-435Q BP-283 FA-S81VS 143MHz.da52:0

DUT: IC-F3400DT; Type: UHF Transceiver; Serial: 01000151

Communication System: UID 0, CW (0); Frequency: 143 MHz; Duty Cycle: 1:1
Medium parameters used (interpolated): f = 143 MHz; σ = 0.812 S/m; ε_r = 61.834; ρ = 1000 kg/m^3 ;
Phantom section: Flat Section ; Measurement Standard: DASY5 (IEEE/IEC/ANSI C63.19-2007)

DASY Configuration:

- Probe: ES3DV3 - SN3250; ConvF(7.18, 7.18, 7.18); Calibrated: 3/22/2016;
- Sensor-Surface: 3mm (Mechanical Surface Detection)
- Electronics: DAE4 Sn874; Calibrated: 8/24/2015
- Phantom: ELI 4.0; Type: QD OVA 001 BB; Serial: 1057
- DASY52 52.8.8(1222); SEMCAD X 14.6.10(7331)

Configuration_Body_IC-F3400DT/Body Back, P=5W, d=0mm/Area Scan (61x151x1):

Interpolated grid: dx=1.500 mm, dy=1.500 mm
Maximum value of SAR (interpolated) = 2.87 W/kg

Configuration_Body_IC-F3400DT/Body Back, P=5W, d=0mm/Zoom Scan (5x5x7) (5x5x7)/Cube 0:

Measurement grid: dx=7.5mm, dy=7.5mm, dz=5mm
Reference Value = 5.828 V/m; Power Drift = 0.01 dB
Peak SAR (extrapolated) = 3.86 W/kg
SAR(1 g) = 2.55 W/kg; SAR(10 g) = 1.89 W/kg (SAR corrected for target medium)
Maximum value of SAR (measured) = 2.86 W/kg

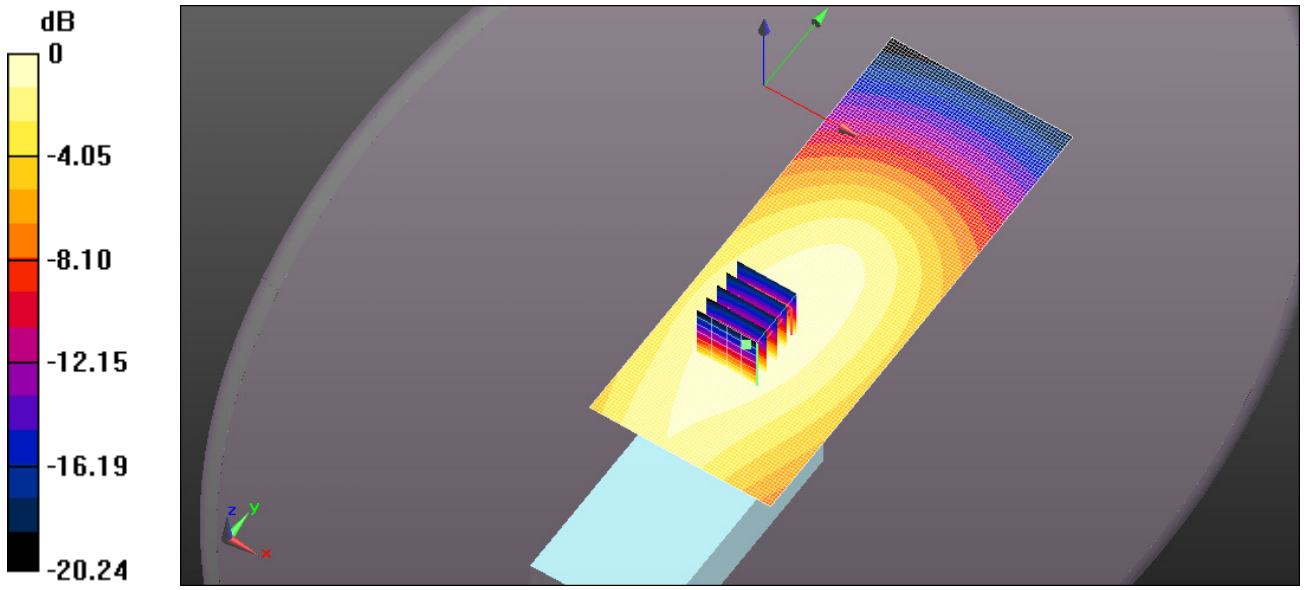

0 dB = 2.87 W/kg = 4.58 dBW/kg

Test Laboratory: Ultratech Group of Labs

FILE NAME: ICOM-435Q BP-283 FA-S81VS 150MHz.da52:0

DUT: IC-F3400DT; Type: UHF Transceiver; Serial: 01000151

Communication System: UID 0, CW (0); Frequency: 156 MHz; Duty Cycle: 1:1
Medium parameters used: f = 156 MHz; σ = 0.824 S/m; ε_r = 62.185; ρ = 1000 kg/m^3 ; Phantom section: Flat Section ; Measurement Standard: DASY5 (IEEE/IEC/ANSI C63.19-2007)

DASY Configuration:

- Probe: ES3DV3 - SN3250; ConvF(7.18, 7.18, 7.18); Calibrated: 3/22/2016;
- Sensor-Surface: 3mm (Mechanical Surface Detection)
- Electronics: DAE4 Sn874; Calibrated: 8/24/2015
- Phantom: ELI 4.0; Type: QD OVA 001 BB; Serial: 1057
- DASY52 52.8.8(1222); SEMCAD X 14.6.10(7331)

Configuration_Body_IC-F3400DT/Body Back, P=5W, d=0mm/Area Scan (61x151x1):

Interpolated grid: dx=1.500 mm, dy=1.500 mm
Maximum value of SAR (interpolated) = 0.305 W/kg

Configuration_Body_IC-F3400DT/Body Back, P=5W, d=0mm/Zoom Scan (5x5x7) (5x5x7)/Cube 0:

Measurement grid: dx=7.5mm, dy=7.5mm, dz=5mm
Reference Value = 1.572 V/m; Power Drift = 0.29 dB
Peak SAR (extrapolated) = 0.401 W/kg
SAR(1 g) = 0.275 W/kg; SAR(10 g) = 0.206 W/kg (SAR corrected for target medium)
Maximum value of SAR (measured) = 0.307 W/kg

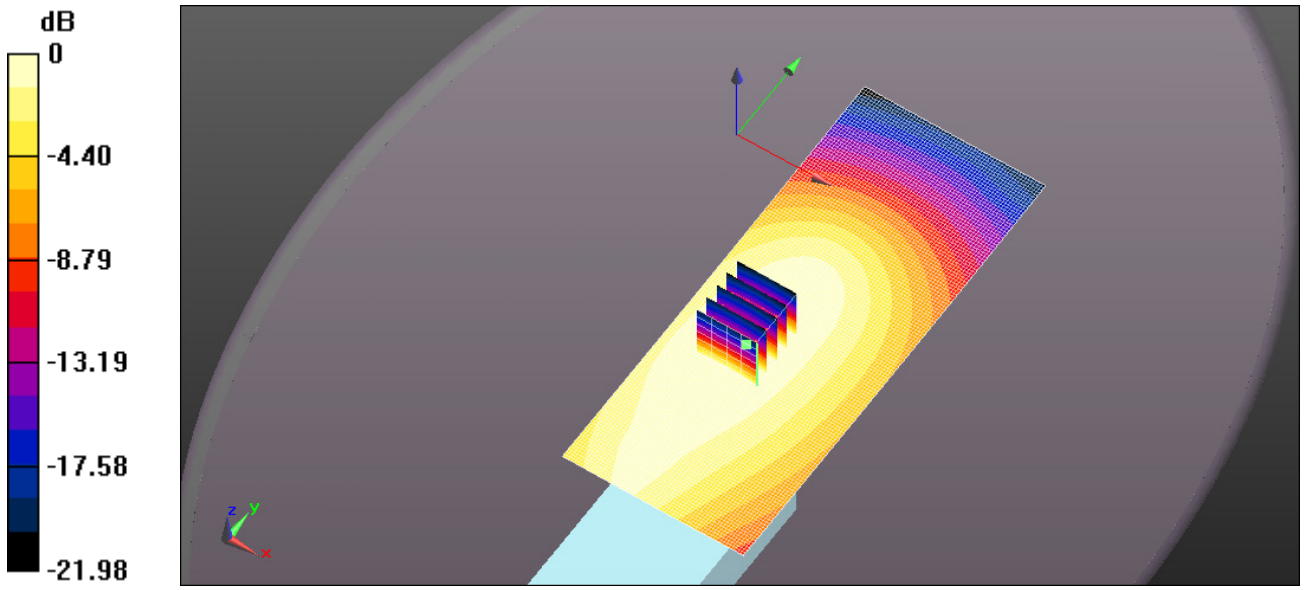

0 dB = 0.305 W/kg = -5.15 dBW/kg

Test Laboratory: Ultratech Group of Labs

FILE NAME: ICOM-435Q BP-283 FA-S82VS 150MHz.da52:0

DUT: IC-F3400DT; Type: UHF Transceiver; Serial: 01000151

Communication System: UID 0, CW (0); Frequency: 150 MHz; Duty Cycle: 1:1
Medium parameters used: f = 150 MHz; σ = 0.818 S/m; ε_r = 62.016; ρ = 1000 kg/m^3 ; Phantom section: Flat Section ; Measurement Standard: DASY5 (IEEE/IEC/ANSI C63.19-2007)

DASY Configuration:

- Probe: ES3DV3 - SN3250; ConvF(7.18, 7.18, 7.18); Calibrated: 3/22/2016;
- Sensor-Surface: 3mm (Mechanical Surface Detection)
- Electronics: DAE4 Sn874; Calibrated: 8/24/2015
- Phantom: ELI 4.0; Type: QD OVA 001 BB; Serial: 1057
- DASY52 52.8.8(1222); SEMCAD X 14.6.10(7331)

Configuration_Body_IC-F3400DT/Body Back, P=5W, d=0mm/Area Scan (61x151x1):

Interpolated grid: dx=1.500 mm, dy=1.500 mm
Maximum value of SAR (interpolated) = 1.84 W/kg

Configuration_Body_IC-F3400DT/Body Back, P=5W, d=0mm/Zoom Scan (5x5x7) (6x7x7)/Cube 0:

Measurement grid: dx=7.5mm, dy=7.5mm, dz=5mm
Reference Value = 3.384 V/m; Power Drift = 0.13 dB
Peak SAR (extrapolated) = 2.56 W/kg
SAR(1 g) = 1.61 W/kg; SAR(10 g) = 1.19 W/kg (SAR corrected for target medium)
Maximum value of SAR (measured) = 1.84 W/kg

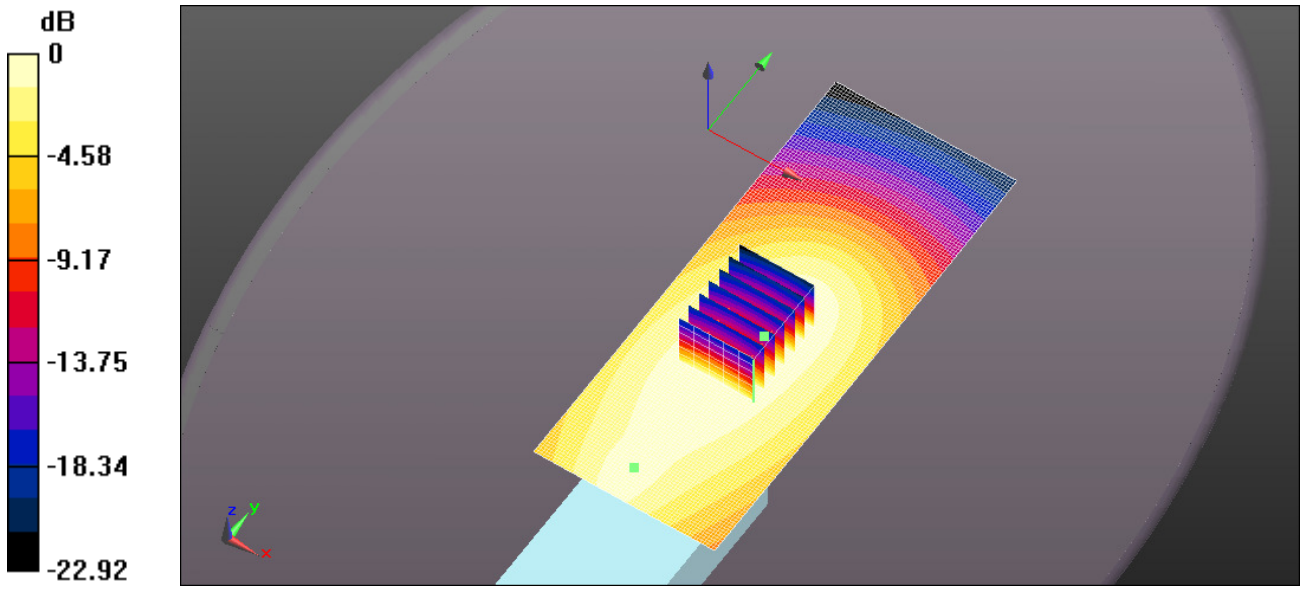

0 dB = 1.84 W/kg = 2.65 dBW/kg

Test Laboratory: Ultratech Group of Labs

FILE NAME: ICOM-435Q BP-283 FA-S82VS 156MHz.da52:0

DUT: IC-F3400DT; Type: UHF Transceiver; Serial: 01000151

Communication System: UID 0, CW (0); Frequency: 156 MHz; Duty Cycle: 1:1
Medium parameters used: f = 156 MHz; σ = 0.824 S/m; ε_r = 62.185; ρ = 1000 kg/m^3 ; Phantom section: Flat Section ; Measurement Standard: DASY5 (IEEE/IEC/ANSI C63.19-2007)

DASY Configuration:

- Probe: ES3DV3 - SN3250; ConvF(7.18, 7.18, 7.18); Calibrated: 3/22/2016;
- Sensor-Surface: 3mm (Mechanical Surface Detection)
- Electronics: DAE4 Sn874; Calibrated: 8/24/2015
- Phantom: ELI 4.0; Type: QD OVA 001 BB; Serial: 1057
- DASY52 52.8.8(1222); SEMCAD X 14.6.10(7331)

Configuration_Body_IC-F3400DT/Body Back, P=5W, d=0mm/Area Scan (61x151x1):

Interpolated grid: dx=1.500 mm, dy=1.500 mm
Maximum value of SAR (interpolated) = 1.05 W/kg

Configuration_Body_IC-F3400DT/Body Back, P=5W, d=0mm/Zoom Scan (5x5x7) (5x6x7)/Cube 0:

Measurement grid: dx=7.5mm, dy=7.5mm, dz=5mm
Reference Value = 2.989 V/m; Power Drift = 0.20 dB
Peak SAR (extrapolated) = 1.40 W/kg
SAR(1 g) = 0.936 W/kg; SAR(10 g) = 0.693 W/kg (SAR corrected for target medium)
Maximum value of SAR (measured) = 1.05 W/kg

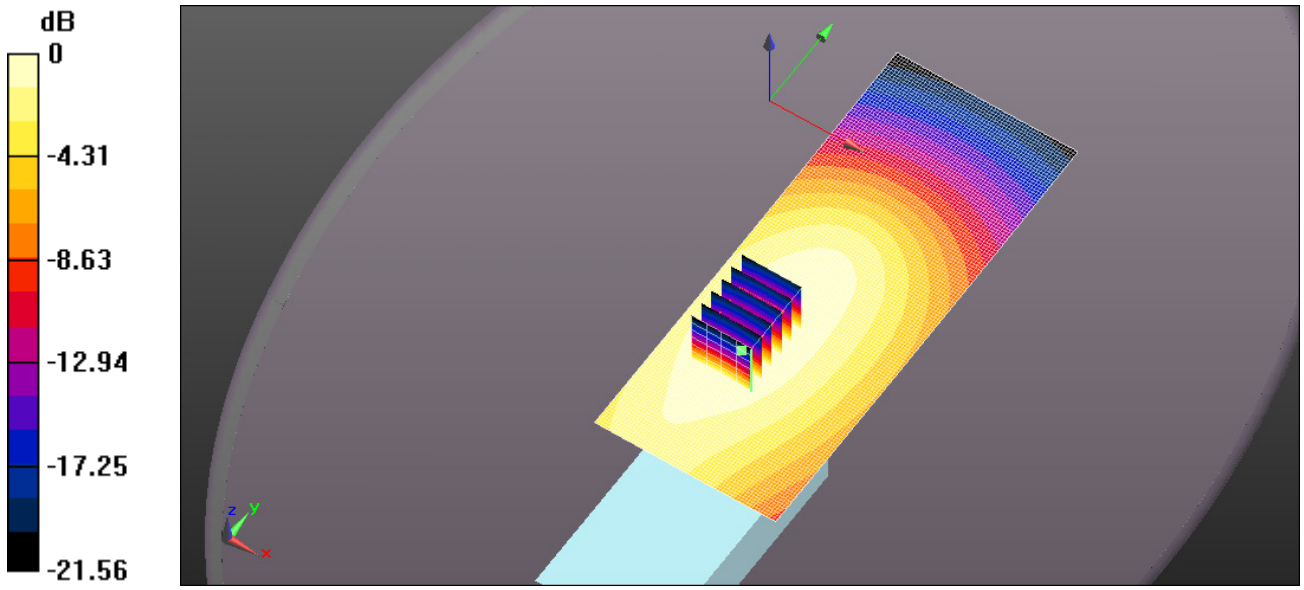

0 dB = 1.05 W/kg = 0.21 dBW/kg

Test Laboratory: Ultratech Group of Labs

FILE NAME: ICOM-435Q BP-283 FA-S82VS 162MHz.da52:0

DUT: IC-F3400DT; Type: UHF Transceiver; Serial: 01000151

Communication System: UID 0, CW (0); Frequency: 162 MHz; Duty Cycle: 1:1
Medium parameters used: f = 162 MHz; σ = 0.831 S/m; ε_r = 61.939; ρ = 1000 kg/m^3 ; Phantom section: Flat Section ; Measurement Standard: DASY5 (IEEE/IEC/ANSI C63.19-2007)

DASY Configuration:

- Probe: ES3DV3 - SN3250; ConvF(7.18, 7.18, 7.18); Calibrated: 3/22/2016;
- Sensor-Surface: 3mm (Mechanical Surface Detection)
- Electronics: DAE4 Sn874; Calibrated: 8/24/2015
- Phantom: ELI 4.0; Type: QD OVA 001 BB; Serial: 1057
- DASY52 52.8.8(1222); SEMCAD X 14.6.10(7331)

Configuration_Body_IC-F3400DT/Body Back, P=5W, d=0mm/Area Scan (61x151x1):

Interpolated grid: dx=1.500 mm, dy=1.500 mm
Maximum value of SAR (interpolated) = 0.247 W/kg

Configuration_Body_IC-F3400DT/Body Back, P=5W, d=0mm/Zoom Scan (5x5x7) (6x6x7)/Cube 0:

Measurement grid: dx=7.5mm, dy=7.5mm, dz=5mm
Reference Value = 1.438 V/m; Power Drift = -0.00 dB
Peak SAR (extrapolated) = 0.325 W/kg
SAR(1 g) = 0.222 W/kg; SAR(10 g) = 0.165 W/kg (SAR corrected for target medium)
Maximum value of SAR (measured) = 0.248 W/kg

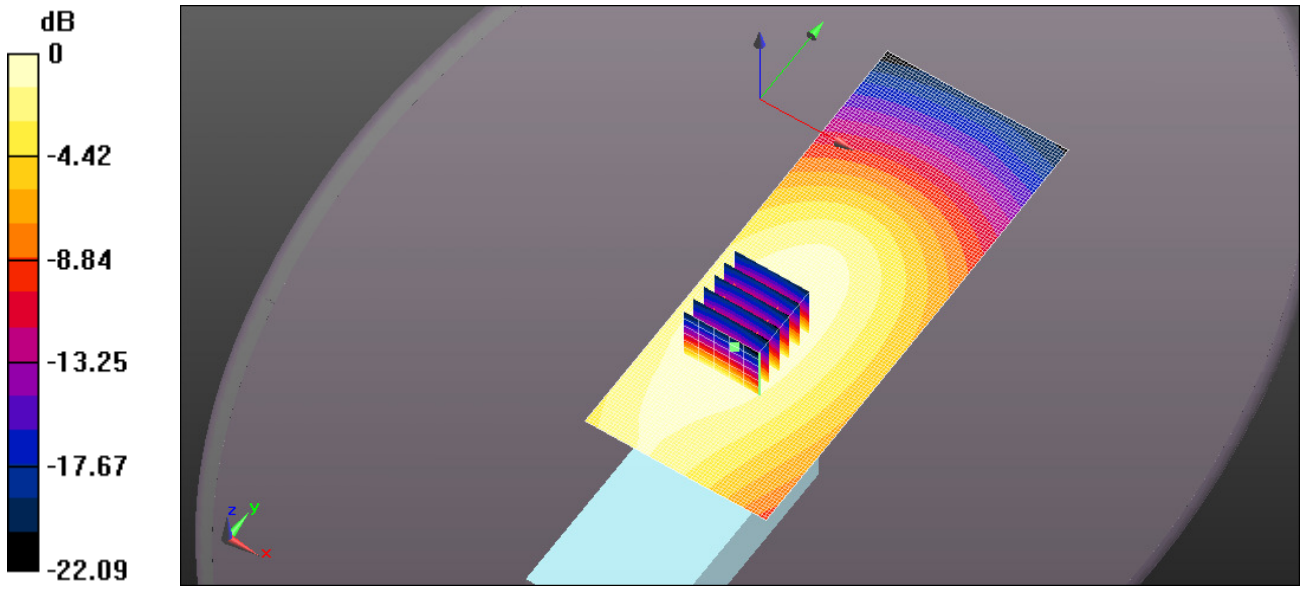

0 dB = 0.247 W/kg = -6.07 dBW/kg

Test Laboratory: Ultratech Group of Labs

FILE NAME: ICOM-435Q BP-283 FA-S83VS 160MHz.da52:0

DUT: IC-F3400DT; Type: UHF Transceiver; Serial: 01000151

Communication System: UID 0, CW (0); Frequency: 160 MHz; Duty Cycle: 1:1
Medium parameters used: f = 160 MHz; σ = 0.829 S/m; ε_r = 62.018; ρ = 1000 kg/m^3 ; Phantom section: Flat Section ; Measurement Standard: DASY5 (IEEE/IEC/ANSI C63.19-2007)

DASY Configuration:

- Probe: ES3DV3 - SN3250; ConvF(7.18, 7.18, 7.18); Calibrated: 3/22/2016;
- Sensor-Surface: 3mm (Mechanical Surface Detection)
- Electronics: DAE4 Sn874; Calibrated: 8/24/2015
- Phantom: ELI 4.0; Type: QD OVA 001 BB; Serial: 1057
- DASY52 52.8.8(1222); SEMCAD X 14.6.10(7331)

Configuration_Body_IC-F3400DT/Body Back, P=5W, d=0mm/Area Scan (61x151x1):

Interpolated grid: dx=1.500 mm, dy=1.500 mm
Maximum value of SAR (interpolated) = 0.605 W/kg

Configuration_Body_IC-F3400DT/Body Back, P=5W, d=0mm/Zoom Scan (5x5x7) (5x6x7)/Cube 0:

Measurement grid: dx=7.5mm, dy=7.5mm, dz=5mm
Reference Value = 2.220 V/m; Power Drift = 0.06 dB
Peak SAR (extrapolated) = 0.801 W/kg
SAR(1 g) = 0.540 W/kg; SAR(10 g) = 0.400 W/kg (SAR corrected for target medium)
Maximum value of SAR (measured) = 0.604 W/kg

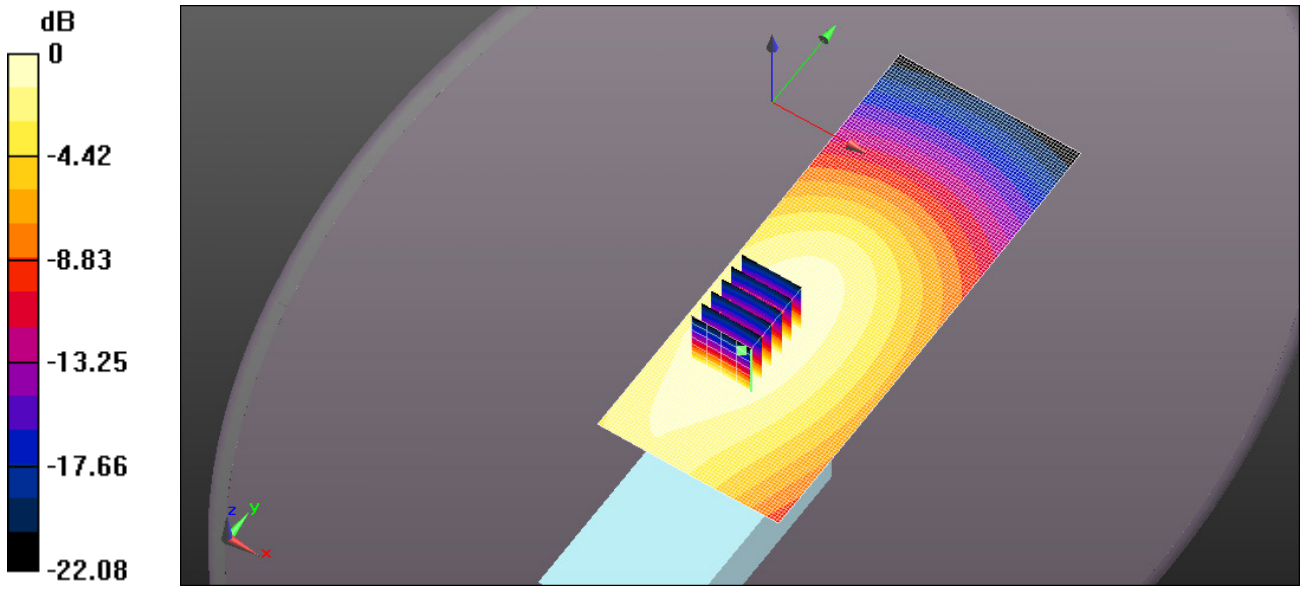

0 dB = 0.605 W/kg = -2.18 dBW/kg

Test Laboratory: Ultratech Group of Labs

FILE NAME: ICOM-435Q BP-283 FA-S83VS 167MHz.da52:0

DUT: IC-F3400DT; Type: UHF Transceiver; Serial: 01000151

Communication System: UID 0, CW (0); Frequency: 167 MHz; Duty Cycle: 1:1
Medium parameters used (interpolated): f = 167 MHz; σ = 0.834 S/m; ε_r = 61.988; ρ = 1000 kg/m^3 ;
Phantom section: Flat Section ; Measurement Standard: DASY5 (IEEE/IEC/ANSI C63.19-2007)

DASY Configuration:

- Probe: ES3DV3 - SN3250; ConvF(7.18, 7.18, 7.18); Calibrated: 3/22/2016;
- Sensor-Surface: 3mm (Mechanical Surface Detection)
- Electronics: DAE4 Sn874; Calibrated: 8/24/2015
- Phantom: ELI 4.0; Type: QD OVA 001 BB; Serial: 1057
- DASY52 52.8.8(1222); SEMCAD X 14.6.10(7331)

Configuration_Body_IC-F3400DT/Body Back, P=5W, d=0mm/Area Scan (61x151x1):

Interpolated grid: dx=1.500 mm, dy=1.500 mm
Maximum value of SAR (interpolated) = 1.97 W/kg

Configuration_Body_IC-F3400DT/Body Back, P=5W, d=0mm/Zoom Scan (5x5x7) (5x6x7)/Cube 0:

Measurement grid: dx=7.5mm, dy=7.5mm, dz=5mm
Reference Value = 4.420 V/m; Power Drift = 0.01 dB
Peak SAR (extrapolated) = 2.59 W/kg
SAR(1 g) = 1.76 W/kg; SAR(10 g) = 1.3 W/kg (SAR corrected for target medium)
Maximum value of SAR (measured) = 1.97 W/kg

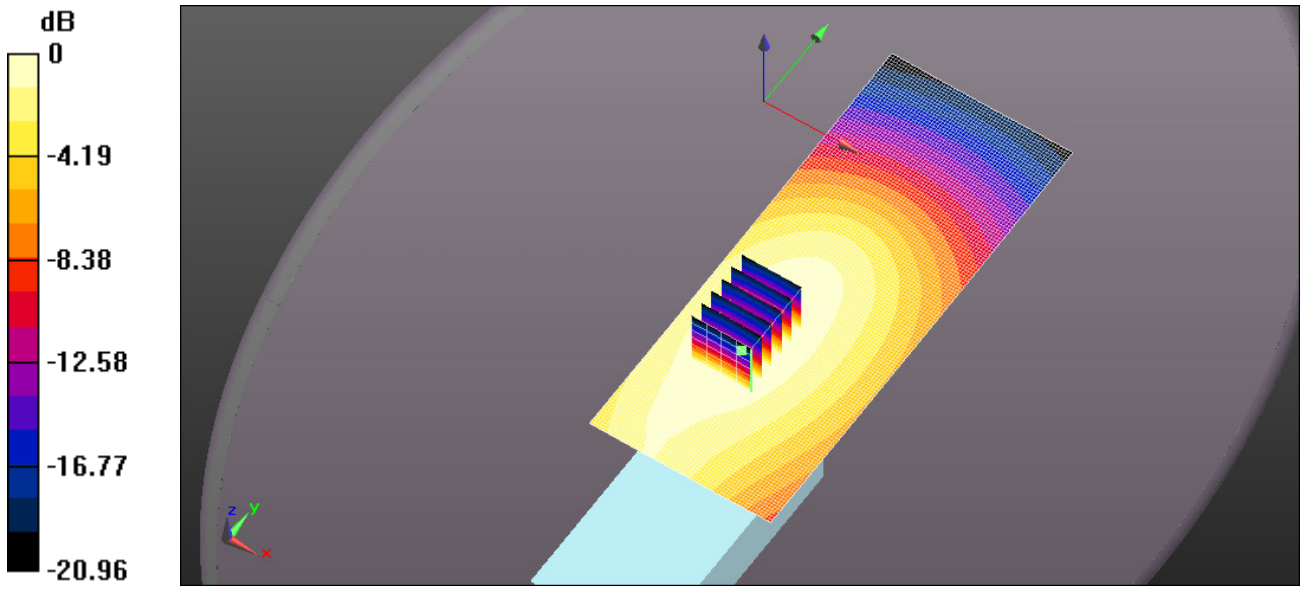

0 dB = 1.97 W/kg = 2.95 dBW/kg

Test Laboratory: Ultratech Group of Labs

FILE NAME: ICOM-435Q BP-283 FA-S83VS 174MHz.da52:0

DUT: IC-F3400DT; Type: UHF Transceiver; Serial: 01000151

Communication System: UID 0, CW (0); Frequency: 174 MHz; Duty Cycle: 1:1
Medium parameters used: f = 174 MHz; σ = 0.842 S/m; ε_r = 61.964; ρ = 1000 kg/m^3 ; Phantom section: Flat Section ; Measurement Standard: DASY5 (IEEE/IEC/ANSI C63.19-2007)

DASY Configuration:

- Probe: ES3DV3 - SN3250; ConvF(7.18, 7.18, 7.18); Calibrated: 3/22/2016;
- Sensor-Surface: 3mm (Mechanical Surface Detection)
- Electronics: DAE4 Sn874; Calibrated: 8/24/2015
- Phantom: ELI 4.0; Type: QD OVA 001 BB; Serial: 1057
- DASY52 52.8.8(1222); SEMCAD X 14.6.10(7331)

Configuration_Body_IC-F3400DT/Body Back, P=5W, d=0mm/Area Scan (61x151x1):

Interpolated grid: dx=1.500 mm, dy=1.500 mm
Maximum value of SAR (interpolated) = 0.499 W/kg

Configuration_Body_IC-F3400DT/Body Back, P=5W, d=0mm/Zoom Scan (5x5x7) (5x5x7)/Cube 0:

Measurement grid: dx=7.5mm, dy=7.5mm, dz=5mm
Reference Value = 0.7770 V/m; Power Drift = 0.24 dB
Peak SAR (extrapolated) = 0.393 W/kg
SAR(1 g) = 0.271 W/kg; SAR(10 g) = 0.202 W/kg (SAR corrected for target medium)
Maximum value of SAR (measured) = 0.303 W/kg

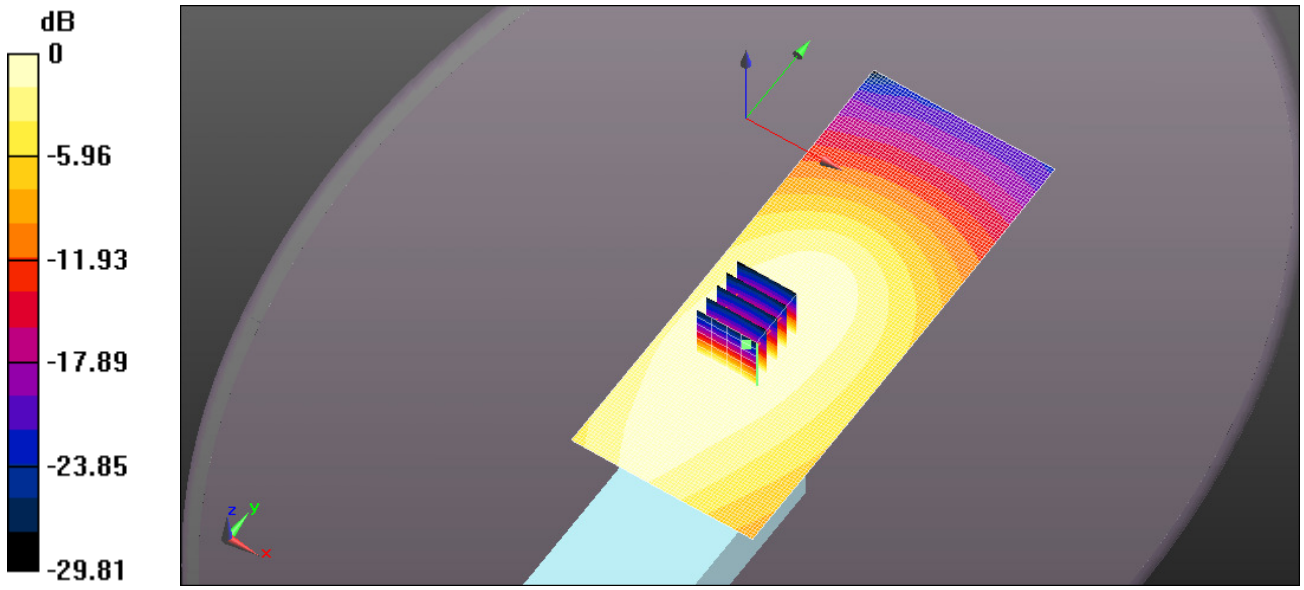

0 dB = 0.499 W/kg = -3.02 dBW/kg

Test Laboratory: Ultratech Group of Labs

FILE NAME: ICOM-435Q BP-283 FA-S67VC 150MHz 150MHz.da52:0

DUT: IC-F3400DT; Type: UHF Transceiver; Serial: 01000151

Communication System: UID 0, CW (0); Frequency: 150 MHz; Duty Cycle: 1:1
Medium parameters used: f = 150 MHz; σ = 0.818 S/m; ε_r = 62.016; ρ = 1000 kg/m^3 ; Phantom section: Flat Section ; Measurement Standard: DASY5 (IEEE/IEC/ANSI C63.19-2007)

DASY Configuration:

- Probe: ES3DV3 - SN3250; ConvF(7.18, 7.18, 7.18); Calibrated: 3/22/2016;
- Sensor-Surface: 3mm (Mechanical Surface Detection)
- Electronics: DAE4 Sn874; Calibrated: 8/24/2015
- Phantom: ELI 4.0; Type: QD OVA 001 BB; Serial: 1057
- DASY52 52.8.8(1222); SEMCAD X 14.6.10(7331)

Configuration_Body_IC-F3400DT/Body Back, P=5W, d=0mm/Area Scan (61x151x1):

Interpolated grid: dx=1.500 mm, dy=1.500 mm
Maximum value of SAR (interpolated) = 2.05 W/kg

Configuration_Body_IC-F3400DT/Body Back, P=5W, d=0mm/Zoom Scan (5x5x7) (5x5x7)/Cube 0:

Measurement grid: dx=7.5mm, dy=7.5mm, dz=5mm
Reference Value = 16.87 V/m; Power Drift = -0.05 dB
Peak SAR (extrapolated) = 2.63 W/kg
SAR(1 g) = 1.8 W/kg; SAR(10 g) = 1.36 W/kg (SAR corrected for target medium)
Maximum value of SAR (measured) = 2.05 W/kg

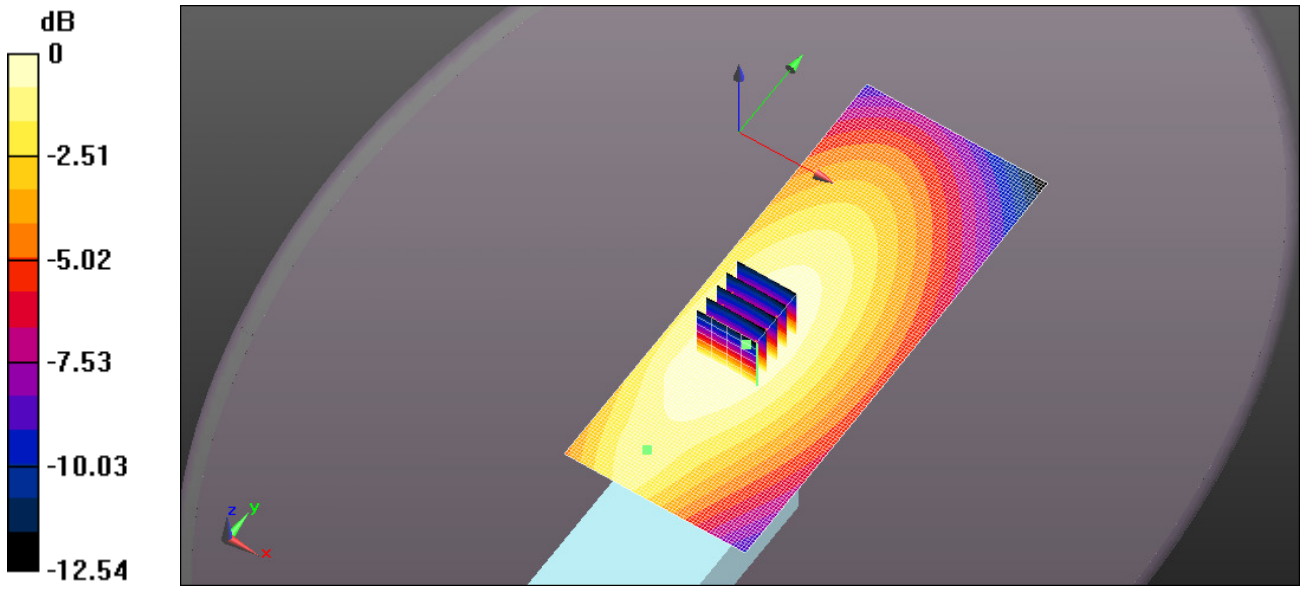

0 dB = 2.05 W/kg = 3.11 dBW/kg

Test Laboratory: Ultratech Group of Labs

FILE NAME: ICOM-435Q BP-283 FA-S67VC 150MHz 162MHz.da52:0

DUT: IC-F3400DT; Type: UHF Transceiver; Serial: 01000151

Communication System: UID 0, CW (0); Frequency: 162 MHz; Duty Cycle: 1:1
Medium parameters used: f = 162 MHz; σ = 0.831 S/m; ε_r = 61.939; ρ = 1000 kg/m^3 ; Phantom section: Flat Section ; Measurement Standard: DASY5 (IEEE/IEC/ANSI C63.19-2007)

DASY Configuration:

- Probe: ES3DV3 - SN3250; ConvF(7.18, 7.18, 7.18); Calibrated: 3/22/2016;
- Sensor-Surface: 3mm (Mechanical Surface Detection)
- Electronics: DAE4 Sn874; Calibrated: 8/24/2015
- Phantom: ELI 4.0; Type: QD OVA 001 BB; Serial: 1057
- DASY52 52.8.8(1222); SEMCAD X 14.6.10(7331)

Configuration_Body_IC-F3400DT/Body Back, P=5W, d=0mm/Area Scan (61x151x1):

Interpolated grid: dx=1.500 mm, dy=1.500 mm
Maximum value of SAR (interpolated) = 1.05 W/kg

Configuration_Body_IC-F3400DT/Body Back, P=5W, d=0mm/Zoom Scan (5x5x7) (6x7x7)/Cube 0:

Measurement grid: dx=7.5mm, dy=7.5mm, dz=5mm
Reference Value = 8.920 V/m; Power Drift = -0.03 dB
Peak SAR (extrapolated) = 1.39 W/kg
SAR(1 g) = 0.937 W/kg; SAR(10 g) = 0.703 W/kg (SAR corrected for target medium)
Maximum value of SAR (measured) = 1.05 W/kg

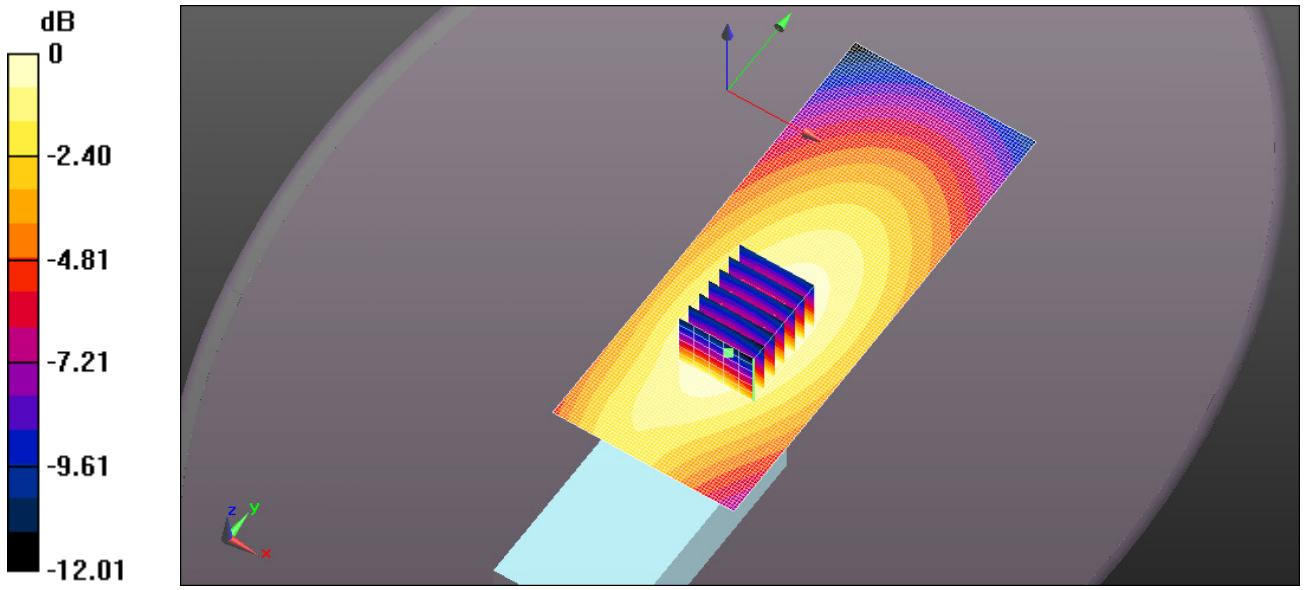

0 dB = 1.05 W/kg = 0.20 dBW/kg

Test Laboratory: Ultratech Group of Labs

FILE NAME: ICOM-435Q BP-283 FA-S67VC 150MHz 174MHz.da52:0

DUT: IC-F3400DT; Type: UHF Transceiver; Serial: 01000151

Communication System: UID 0, CW (0); Frequency: 174 MHz; Duty Cycle: 1:1
Medium parameters used: f = 174 MHz; σ = 0.842 S/m; ε_r = 61.964; ρ = 1000 kg/m^3 ; Phantom section: Flat Section ; Measurement Standard: DASY5 (IEEE/IEC/ANSI C63.19-2007)

DASY Configuration:

- Probe: ES3DV3 - SN3250; ConvF(7.18, 7.18, 7.18); Calibrated: 3/22/2016;
- Sensor-Surface: 3mm (Mechanical Surface Detection)
- Electronics: DAE4 Sn874; Calibrated: 8/24/2015
- Phantom: ELI 4.0; Type: QD OVA 001 BB; Serial: 1057
- DASY52 52.8.8(1222); SEMCAD X 14.6.10(7331)

Configuration_Body_IC-F3400DT/Body Back, P=5W, d=0mm/Area Scan (61x151x1):

Interpolated grid: dx=1.500 mm, dy=1.500 mm
Maximum value of SAR (interpolated) = 0.426 W/kg

Configuration_Body_IC-F3400DT/Body Back, P=5W, d=0mm/Zoom Scan (5x5x7) (5x5x7)/Cube 0:

Measurement grid: dx=7.5mm, dy=7.5mm, dz=5mm
Reference Value = 6.457 V/m; Power Drift = -0.01 dB
Peak SAR (extrapolated) = 0.328 W/kg
SAR(1 g) = 0.227 W/kg; SAR(10 g) = 0.170 W/kg (SAR corrected for target medium)
Maximum value of SAR (measured) = 0.254 W/kg

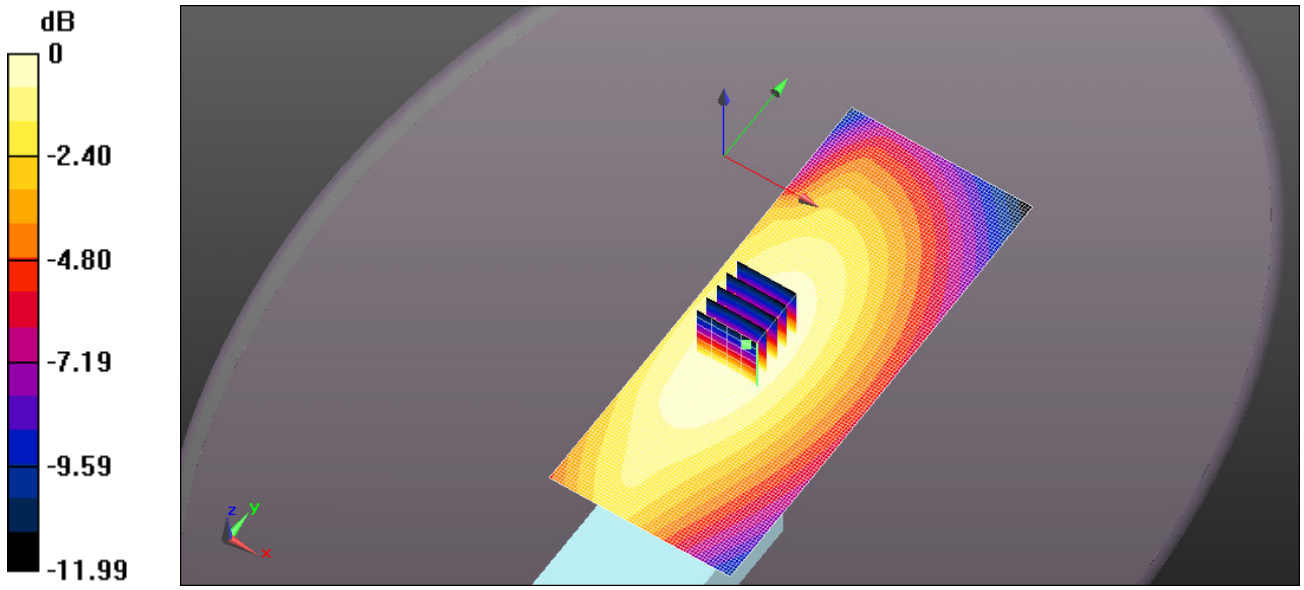

0 dB = 0.426 W/kg = -3.70 dBW/kg

Test Laboratory: Ultratech Group of Labs

FILE NAME: ICOM-435Q BP-283 FA-S67VC 155MHz 150MHz.da52:0

DUT: IC-F3400DT; Type: UHF Transceiver; Serial: 01000151

Communication System: UID 0, CW (0); Frequency: 150 MHz; Duty Cycle: 1:1
Medium parameters used: f = 150 MHz; σ = 0.818 S/m; ε_r = 62.016; ρ = 1000 kg/m^3 ; Phantom section: Flat Section ; Measurement Standard: DASY5 (IEEE/IEC/ANSI C63.19-2007)

DASY Configuration:

- Probe: ES3DV3 - SN3250; ConvF(7.18, 7.18, 7.18); Calibrated: 3/22/2016;
- Sensor-Surface: 3mm (Mechanical Surface Detection)
- Electronics: DAE4 Sn874; Calibrated: 8/24/2015
- Phantom: ELI 4.0; Type: QD OVA 001 BB; Serial: 1057
- DASY52 52.8.8(1222); SEMCAD X 14.6.10(7331)

Configuration_Body_IC-F3400DT/Body Back, P=5W, d=0mm/Area Scan (61x151x1):

Interpolated grid: dx=1.500 mm, dy=1.500 mm
Maximum value of SAR (interpolated) = 0.745 W/kg

Configuration_Body_IC-F3400DT/Body Back, P=5W, d=0mm/Zoom Scan (5x5x7) (6x6x7)/Cube 0:

Measurement grid: dx=7.5mm, dy=7.5mm, dz=5mm
Reference Value = 8.333 V/m; Power Drift = 0.00 dB
Peak SAR (extrapolated) = 0.976 W/kg
SAR(1 g) = 0.652 W/kg; SAR(10 g) = 0.489 W/kg (SAR corrected for target medium)
Maximum value of SAR (measured) = 0.741 W/kg

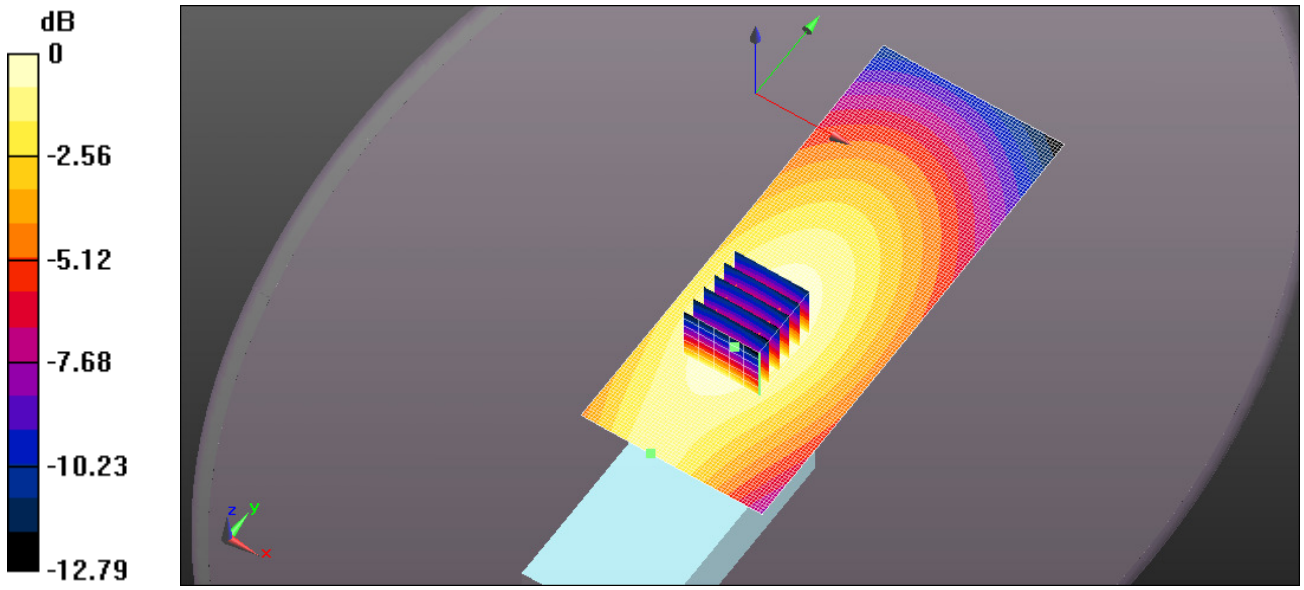

0 dB = 0.745 W/kg = -1.28 dBW/kg

Test Laboratory: Ultratech Group of Labs

FILE NAME: ICOM-435Q BP-283 FA-S67VC 155MHz 162MHz.da52:0

DUT: IC-F3400DT; Type: UHF Transceiver; Serial: 01000151

Communication System: UID 0, CW (0); Frequency: 162 MHz; Duty Cycle: 1:1
Medium parameters used: f = 162 MHz; σ = 0.831 S/m; ε_r = 61.939; ρ = 1000 kg/m^3 ; Phantom section: Flat Section ; Measurement Standard: DASY5 (IEEE/IEC/ANSI C63.19-2007)

DASY Configuration:

- Probe: ES3DV3 - SN3250; ConvF(7.18, 7.18, 7.18); Calibrated: 3/22/2016;
- Sensor-Surface: 3mm (Mechanical Surface Detection)
- Electronics: DAE4 Sn874; Calibrated: 8/24/2015
- Phantom: ELI 4.0; Type: QD OVA 001 BB; Serial: 1057
- DASY52 52.8.8(1222); SEMCAD X 14.6.10(7331)

Configuration_Body_IC-F3400DT/Body Back, P=5W, d=0mm/Area Scan (61x151x1):

Interpolated grid: dx=1.500 mm, dy=1.500 mm
Maximum value of SAR (interpolated) = 1.80 W/kg

Configuration_Body_IC-F3400DT/Body Back, P=5W, d=0mm/Zoom Scan (5x5x7) (5x6x7)/Cube 0:

Measurement grid: dx=7.5mm, dy=7.5mm, dz=5mm
Reference Value = 15.49 V/m; Power Drift = -0.04 dB
Peak SAR (extrapolated) = 2.32 W/kg
SAR(1 g) = 1.6 W/kg; SAR(10 g) = 1.2 W/kg (SAR corrected for target medium)
Maximum value of SAR (measured) = 1.79 W/kg

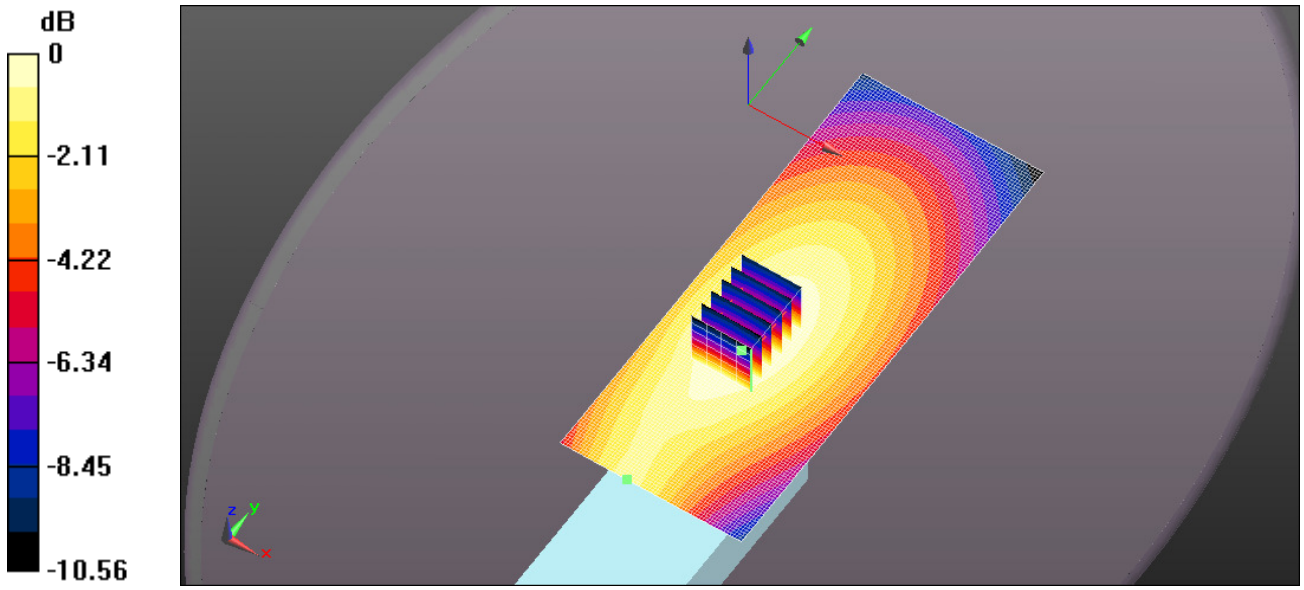

0 dB = 1.80 W/kg = 2.54 dBW/kg

Test Laboratory: Ultratech Group of Labs

FILE NAME: ICOM-435Q BP-283 FA-S67VC 155MHz 174MHz.da52:0

DUT: IC-F3400DT; Type: UHF Transceiver; Serial: 01000151

Communication System: UID 0, CW (0); Frequency: 174 MHz; Duty Cycle: 1:1
Medium parameters used: f = 174 MHz; σ = 0.842 S/m; ε_r = 61.964; ρ = 1000 kg/m^3 ; Phantom section: Flat Section ; Measurement Standard: DASY5 (IEEE/IEC/ANSI C63.19-2007)

DASY Configuration:

- Probe: ES3DV3 - SN3250; ConvF(7.18, 7.18, 7.18); Calibrated: 3/22/2016;
- Sensor-Surface: 3mm (Mechanical Surface Detection)
- Electronics: DAE4 Sn874; Calibrated: 8/24/2015
- Phantom: ELI 4.0; Type: QD OVA 001 BB; Serial: 1057
- DASY52 52.8.8(1222); SEMCAD X 14.6.10(7331)

Configuration_Body_IC-F3400DT/Body Back, P=5W, d=0mm/Area Scan (61x151x1):

Interpolated grid: dx=1.500 mm, dy=1.500 mm
Maximum value of SAR (interpolated) = 0.861 W/kg

Configuration_Body_IC-F3400DT/Body Back, P=5W, d=0mm/Zoom Scan (5x5x7) (6x6x7)/Cube 0:

Measurement grid: dx=7.5mm, dy=7.5mm, dz=5mm
Reference Value = 12.40 V/m; Power Drift = -0.25 dB
Peak SAR (extrapolated) = 1.03 W/kg
SAR(1 g) = 0.627 W/kg; SAR(10 g) = 0.403 W/kg (SAR corrected for target medium)
Maximum value of SAR (measured) = 0.773 W/kg

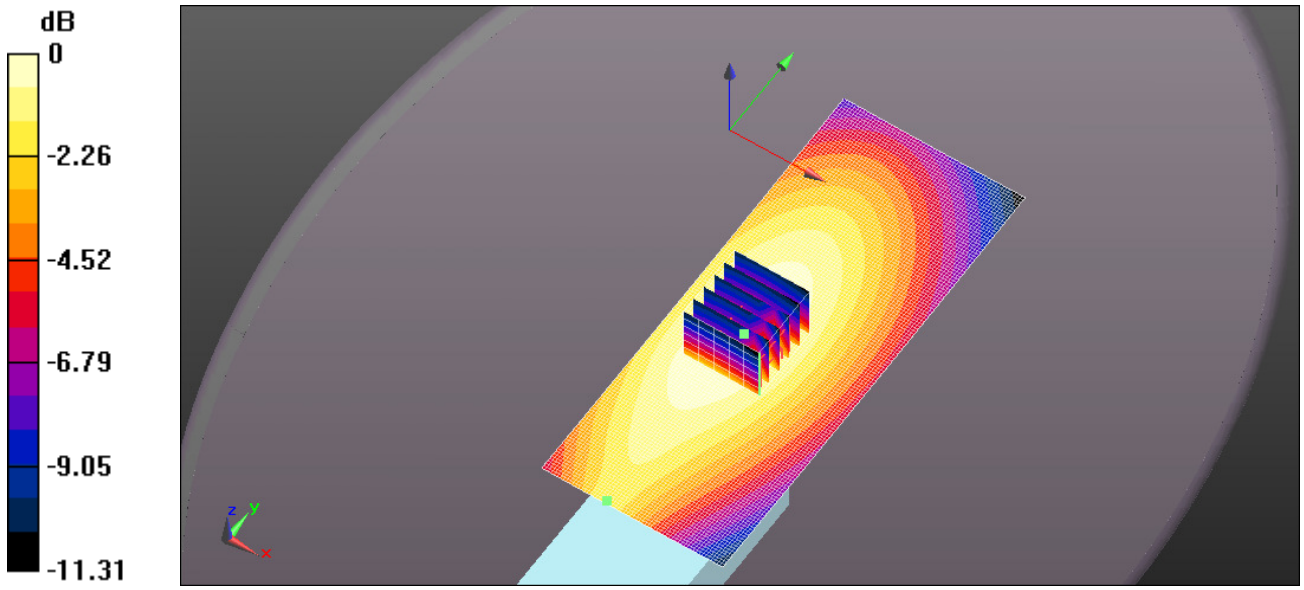

0 dB = 0.861 W/kg = -0.65 dBW/kg

Test Laboratory: Ultratech Group of Labs

FILE NAME: ICOM-435Q BP-283 FA-S67VC 160MHz 150MHz.da52:0

DUT: IC-F3400DT; Type: UHF Transceiver; Serial: 01000151

Communication System: UID 0, CW (0); Frequency: 150 MHz; Duty Cycle: 1:1
Medium parameters used: f = 150 MHz; σ = 0.818 S/m; ε_r = 62.016; ρ = 1000 kg/m^3 ; Phantom section: Flat Section ; Measurement Standard: DASY5 (IEEE/IEC/ANSI C63.19-2007)

DASY Configuration:

- Probe: ES3DV3 - SN3250; ConvF(7.18, 7.18, 7.18); Calibrated: 3/22/2016;
- Sensor-Surface: 3mm (Mechanical Surface Detection)
- Electronics: DAE4 Sn874; Calibrated: 8/24/2015
- Phantom: ELI 4.0; Type: QD OVA 001 BB; Serial: 1057
- DASY52 52.8.8(1222); SEMCAD X 14.6.10(7331)

Configuration_Body_IC-F3400DT/Body Back, P=5W, d=0mm/Area Scan (61x151x1):

Interpolated grid: dx=1.500 mm, dy=1.500 mm
Maximum value of SAR (interpolated) = 0.361 W/kg

Configuration_Body_IC-F3400DT/Body Back, P=5W, d=0mm/Zoom Scan (5x5x7) (5x5x7)/Cube 0:

Measurement grid: dx=7.5mm, dy=7.5mm, dz=5mm
Reference Value = 5.136 V/m; Power Drift = 0.02 dB
Peak SAR (extrapolated) = 0.475 W/kg
SAR(1 g) = 0.317 W/kg; SAR(10 g) = 0.237 W/kg (SAR corrected for target medium)
Maximum value of SAR (measured) = 0.360 W/kg

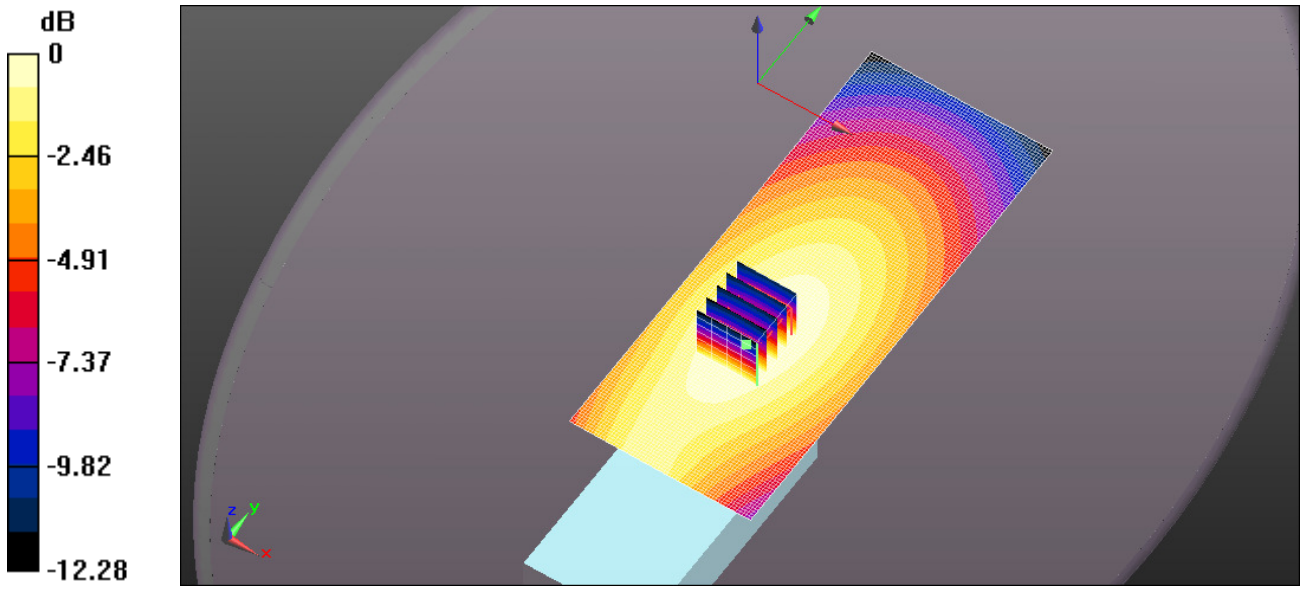

0 dB = 0.361 W/kg = -4.43 dBW/kg

Test Laboratory: Ultratech Group of Labs

FILE NAME: ICOM-435Q BP-283 FA-S67VC 160MHz 162MHz.da52:0

DUT: IC-F3400DT; Type: UHF Transceiver; Serial: 01000151

Communication System: UID 0, CW (0); Frequency: 162 MHz; Duty Cycle: 1:1
Medium parameters used: f = 162 MHz; σ = 0.831 S/m; ε_r = 61.939; ρ = 1000 kg/m^3 ; Phantom section: Flat Section ; Measurement Standard: DASY5 (IEEE/IEC/ANSI C63.19-2007)

DASY Configuration:

- Probe: ES3DV3 - SN3250; ConvF(7.18, 7.18, 7.18); Calibrated: 3/22/2016;
- Sensor-Surface: 3mm (Mechanical Surface Detection)
- Electronics: DAE4 Sn874; Calibrated: 8/24/2015
- Phantom: ELI 4.0; Type: QD OVA 001 BB; Serial: 1057
- DASY52 52.8.8(1222); SEMCAD X 14.6.10(7331)

Configuration_Body_IC-F3400DT/Body Back, P=5W, d=0mm/Area Scan (61x151x1):

Interpolated grid: dx=1.500 mm, dy=1.500 mm
Maximum value of SAR (interpolated) = 1.47 W/kg

Configuration_Body_IC-F3400DT/Body Back, P=5W, d=0mm/Zoom Scan (5x5x7) (5x5x7)/Cube 0:

Measurement grid: dx=7.5mm, dy=7.5mm, dz=5mm
Reference Value = 10.83 V/m; Power Drift = -0.01 dB
Peak SAR (extrapolated) = 1.93 W/kg
SAR(1 g) = 1.32 W/kg; SAR(10 g) = 0.987 W/kg (SAR corrected for target medium)
Maximum value of SAR (measured) = 1.47 W/kg

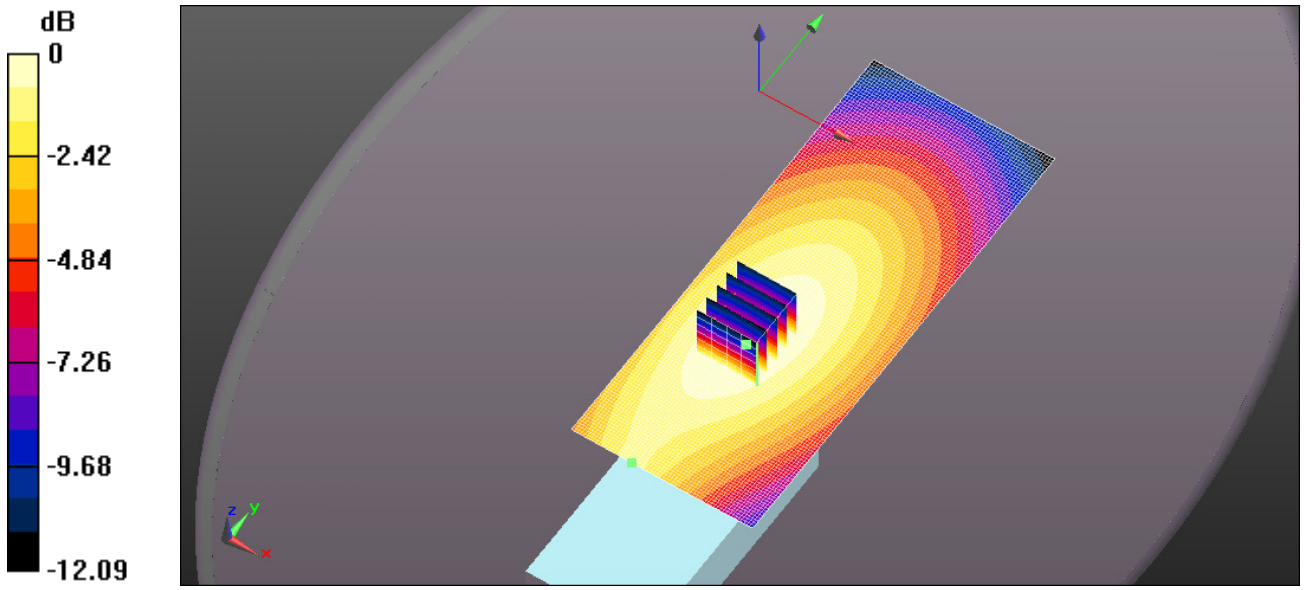

0 dB = 1.47 W/kg = 1.68 dBW/kg

Test Laboratory: Ultratech Group of Labs

FILE NAME: ICOM-435Q BP-283 FA-S67VC 160MHz 174MHz.da52:0

DUT: IC-F3400DT; Type: UHF Transceiver; Serial: 01000151

Communication System: UID 0, CW (0); Frequency: 174 MHz; Duty Cycle: 1:1
Medium parameters used: f = 174 MHz; σ = 0.842 S/m; ε_r = 61.964; ρ = 1000 kg/m^3 ; Phantom section: Flat Section ; Measurement Standard: DASY5 (IEEE/IEC/ANSI C63.19-2007)

DASY Configuration:

- Probe: ES3DV3 - SN3250; ConvF(7.18, 7.18, 7.18); Calibrated: 3/22/2016;
- Sensor-Surface: 3mm (Mechanical Surface Detection)
- Electronics: DAE4 Sn874; Calibrated: 8/24/2015
- Phantom: ELI 4.0; Type: QD OVA 001 BB; Serial: 1057
- DASY52 52.8.8(1222); SEMCAD X 14.6.10(7331)

Configuration_Body_IC-F3400DT/Body Back, P=5W, d=0mm/Area Scan (61x151x1):

Interpolated grid: dx=1.500 mm, dy=1.500 mm
Maximum value of SAR (interpolated) = 1.90 W/kg

Configuration_Body_IC-F3400DT/Body Back, P=5W, d=0mm/Zoom Scan (5x5x7) (5x5x7)/Cube 0:

Measurement grid: dx=7.5mm, dy=7.5mm, dz=5mm
Reference Value = 13.50 V/m; Power Drift = -0.03 dB
Peak SAR (extrapolated) = 2.47 W/kg
SAR(1 g) = 1.71 W/kg; SAR(10 g) = 1.27 W/kg (SAR corrected for target medium)
Maximum value of SAR (measured) = 1.91 W/kg

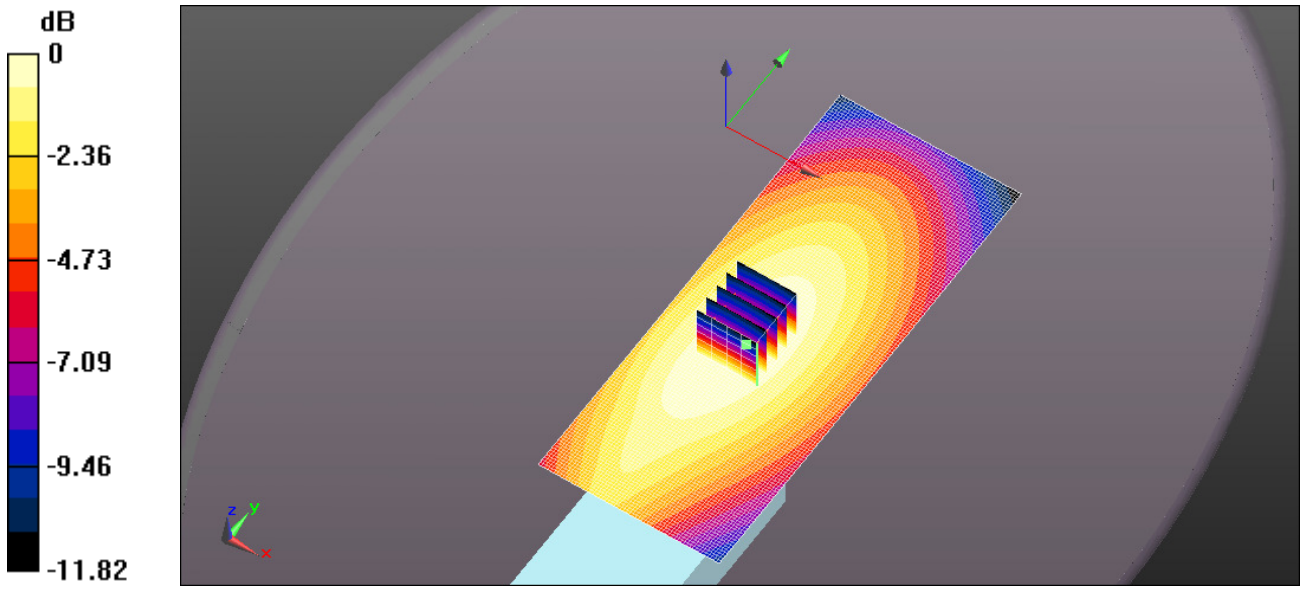

0 dB = 1.90 W/kg = 2.78 dBW/kg

Test Laboratory: Ultratech Group of Labs

FILE NAME: ICOM-435Q BP-283 FA-S67VC 165MHz 150MHz.da52:0

DUT: IC-F3400DT; Type: UHF Transceiver; Serial: 01000151

Communication System: UID 0, CW (0); Frequency: 150 MHz; Duty Cycle: 1:1
Medium parameters used: f = 150 MHz; σ = 0.818 S/m; ε_r = 62.016; ρ = 1000 kg/m^3 ; Phantom section: Flat Section ; Measurement Standard: DASY5 (IEEE/IEC/ANSI C63.19-2007)

DASY Configuration:

- Probe: ES3DV3 - SN3250; ConvF(7.18, 7.18, 7.18); Calibrated: 3/22/2016;
- Sensor-Surface: 3mm (Mechanical Surface Detection)
- Electronics: DAE4 Sn874; Calibrated: 8/24/2015
- Phantom: ELI 4.0; Type: QD OVA 001 BB; Serial: 1057
- DASY52 52.8.8(1222); SEMCAD X 14.6.10(7331)

Configuration_Body_IC-F3400DT/Body Back, P=5W, d=0mm/Area Scan (61x151x1):

Interpolated grid: dx=1.500 mm, dy=1.500 mm
Maximum value of SAR (interpolated) = 0.255 W/kg

Configuration_Body_IC-F3400DT/Body Back, P=5W, d=0mm/Zoom Scan (5x5x7) (6x6x7)/Cube 0:

Measurement grid: dx=7.5mm, dy=7.5mm, dz=5mm
Reference Value = 3.886 V/m; Power Drift = 0.18 dB
Peak SAR (extrapolated) = 0.341 W/kg
SAR(1 g) = 0.223 W/kg; SAR(10 g) = 0.166 W/kg (SAR corrected for target medium)
Maximum value of SAR (measured) = 0.254 W/kg

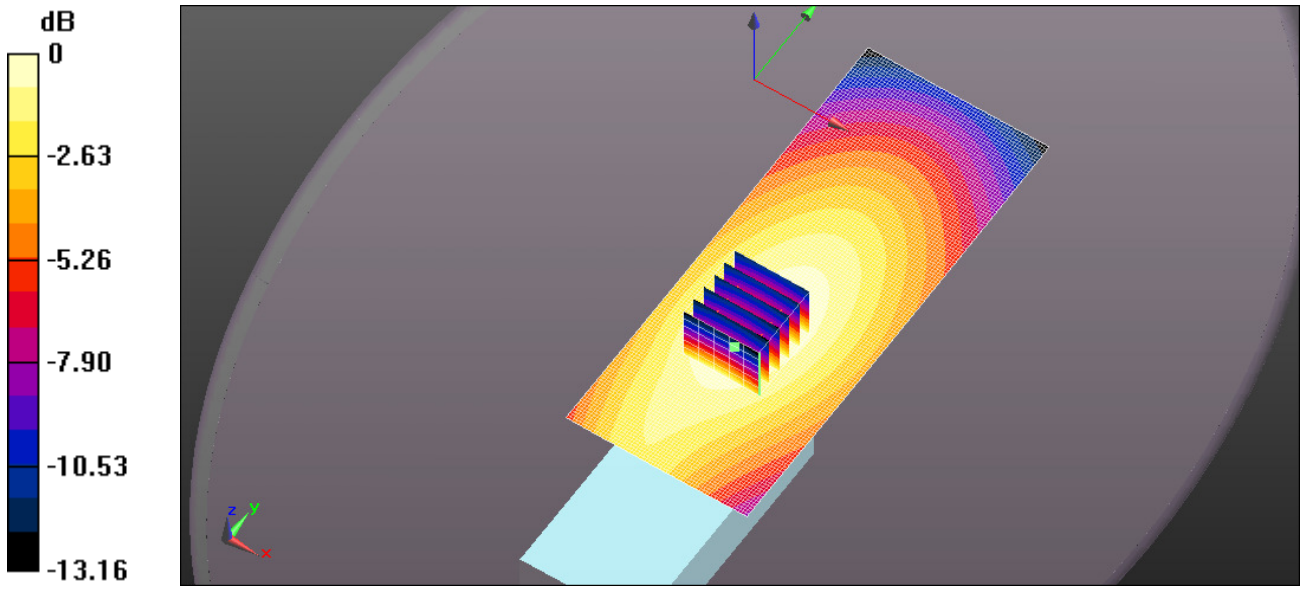

0 dB = 0.255 W/kg = -5.94 dBW/kg

Test Laboratory: Ultratech Group of Labs

FILE NAME: ICOM-435Q BP-283 FA-S67VC 165MHz 162MHz.da52:0

DUT: IC-F3400DT; Type: UHF Transceiver; Serial: 01000151

Communication System: UID 0, CW (0); Frequency: 162 MHz; Duty Cycle: 1:1
Medium parameters used: f = 162 MHz; σ = 0.831 S/m; ε_r = 61.939; ρ = 1000 kg/m^3 ; Phantom section: Flat Section ; Measurement Standard: DASY5 (IEEE/IEC/ANSI C63.19-2007)

DASY Configuration:

- Probe: ES3DV3 - SN3250; ConvF(7.18, 7.18, 7.18); Calibrated: 3/22/2016;
- Sensor-Surface: 3mm (Mechanical Surface Detection)
- Electronics: DAE4 Sn874; Calibrated: 8/24/2015
- Phantom: ELI 4.0; Type: QD OVA 001 BB; Serial: 1057
- DASY52 52.8.8(1222); SEMCAD X 14.6.10(7331)

Configuration_Body_IC-F3400DT/Body Back, P=5W, d=0mm/Area Scan (61x151x1):

Interpolated grid: dx=1.500 mm, dy=1.500 mm
Maximum value of SAR (interpolated) = 0.903 W/kg

Configuration_Body_IC-F3400DT/Body Back, P=5W, d=0mm/Zoom Scan (5x5x7) (5x5x7)/Cube 0:

Measurement grid: dx=7.5mm, dy=7.5mm, dz=5mm
Reference Value = 8.832 V/m; Power Drift = 0.02 dB
Peak SAR (extrapolated) = 1.17 W/kg
SAR(1 g) = 0.815 W/kg; SAR(10 g) = 0.611 W/kg (SAR corrected for target medium)
Maximum value of SAR (measured) = 0.911 W/kg

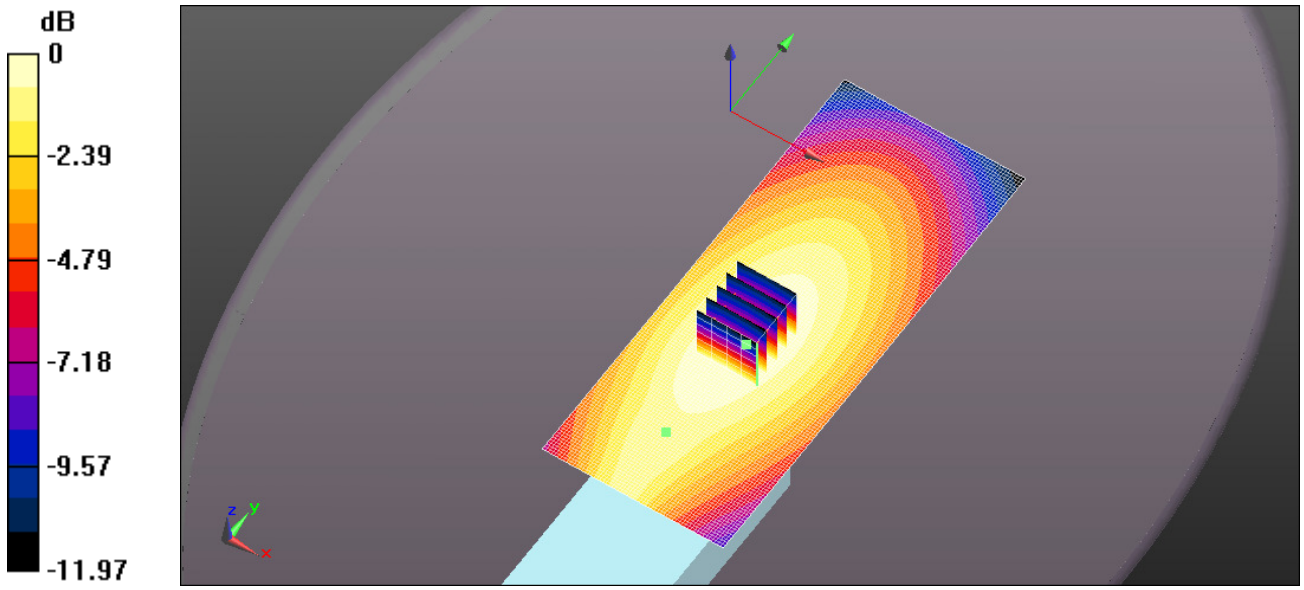

0 dB = 0.903 W/kg = -0.45 dBW/kg

Test Laboratory: Ultratech Group of Labs

FILE NAME: ICOM-435Q BP-283 FA-S67VC 165MHz 174MHz.da52:0

DUT: IC-F3400DT; Type: UHF Transceiver; Serial: 01000151

Communication System: UID 0, CW (0); Frequency: 174 MHz; Duty Cycle: 1:1
Medium parameters used: f = 174 MHz; σ = 0.842 S/m; ε_r = 61.964; ρ = 1000 kg/m^3 ; Phantom section: Flat Section ; Measurement Standard: DASY5 (IEEE/IEC/ANSI C63.19-2007)

DASY Configuration:

- Probe: ES3DV3 - SN3250; ConvF(7.18, 7.18, 7.18); Calibrated: 3/22/2016;
- Sensor-Surface: 3mm (Mechanical Surface Detection)
- Electronics: DAE4 Sn874; Calibrated: 8/24/2015
- Phantom: ELI 4.0; Type: QD OVA 001 BB; Serial: 1057
- DASY52 52.8.8(1222); SEMCAD X 14.6.10(7331)

Configuration_Body_IC-F3400DT/Body Back, P=5W, d=0mm/Area Scan (61x151x1):

Interpolated grid: dx=1.500 mm, dy=1.500 mm
Maximum value of SAR (interpolated) = 2.56 W/kg

Configuration_Body_IC-F3400DT/Body Back, P=5W, d=0mm/Zoom Scan (5x5x7) (5x5x7)/Cube 0:

Measurement grid: dx=7.5mm, dy=7.5mm, dz=5mm
Reference Value = 16.24 V/m; Power Drift = -0.04 dB
Peak SAR (extrapolated) = 3.32 W/kg
SAR(1 g) = 2.3 W/kg; SAR(10 g) = 1.72 W/kg (SAR corrected for target medium)
Maximum value of SAR (measured) = 2.57 W/kg

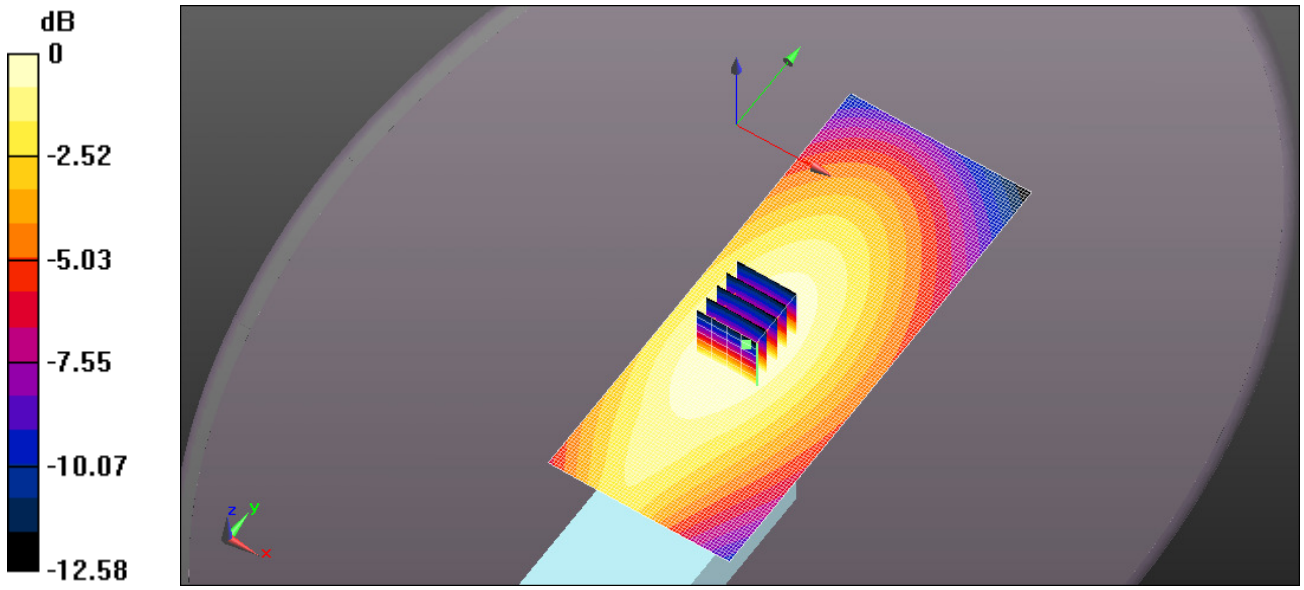

0 dB = 2.56 W/kg = 4.09 dBW/kg

Test Laboratory: Ultratech Group of Labs

FILE NAME: ICOM-435Q BP-283 FA-S67VC 170MHz 150MHz.da52:0

DUT: IC-F3400DT; Type: UHF Transceiver; Serial: 01000151

Communication System: UID 0, CW (0); Frequency: 150 MHz; Duty Cycle: 1:1
Medium parameters used: f = 150 MHz; σ = 0.818 S/m; ε_r = 62.016; ρ = 1000 kg/m^3 ; Phantom section: Flat Section ; Measurement Standard: DASY5 (IEEE/IEC/ANSI C63.19-2007)

DASY Configuration:

- Probe: ES3DV3 - SN3250; ConvF(7.18, 7.18, 7.18); Calibrated: 3/22/2016;
- Sensor-Surface: 3mm (Mechanical Surface Detection)
- Electronics: DAE4 Sn874; Calibrated: 8/24/2015
- Phantom: ELI 4.0; Type: QD OVA 001 BB; Serial: 1057
- DASY52 52.8.8(1222); SEMCAD X 14.6.10(7331)

Configuration_Body_IC-F3400DT/Body Back, P=5W, d=0mm/Area Scan (61x151x1):

Interpolated grid: dx=1.500 mm, dy=1.500 mm
Maximum value of SAR (interpolated) = 0.224 W/kg

Configuration_Body_IC-F3400DT/Body Back, P=5W, d=0mm/Zoom Scan (5x5x7) (5x5x7)/Cube 0:

Measurement grid: dx=7.5mm, dy=7.5mm, dz=5mm
Reference Value = 3.328 V/m; Power Drift = 0.07 dB
Peak SAR (extrapolated) = 0.297 W/kg
SAR(1 g) = 0.198 W/kg; SAR(10 g) = 0.148 W/kg (SAR corrected for target medium)
Maximum value of SAR (measured) = 0.224 W/kg

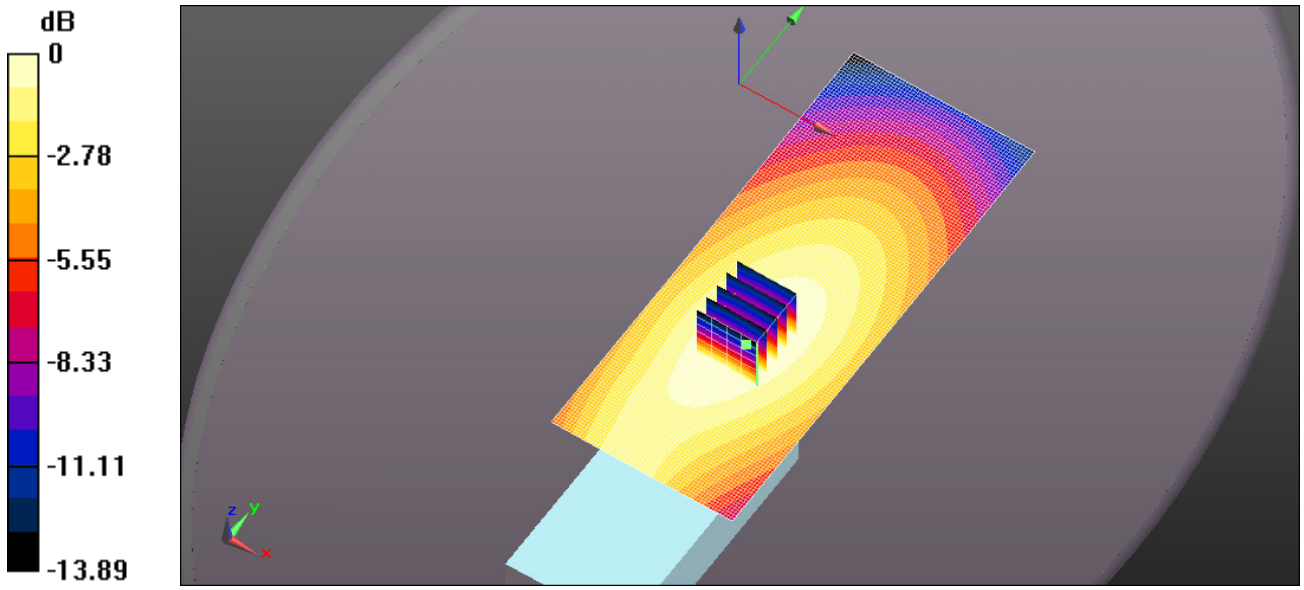

0 dB = 0.224 W/kg = -6.50 dBW/kg

Test Laboratory: Ultratech Group of Labs

FILE NAME: ICOM-435Q BP-283 FA-S67VC 170MHz 162MHz.da52:0

DUT: IC-F3400DT; Type: UHF Transceiver; Serial: 01000151

Communication System: UID 0, CW (0); Frequency: 162 MHz; Duty Cycle: 1:1
Medium parameters used: f = 162 MHz; σ = 0.831 S/m; ε_r = 61.939; ρ = 1000 kg/m^3 ; Phantom section: Flat Section ; Measurement Standard: DASY5 (IEEE/IEC/ANSI C63.19-2007)

DASY Configuration:

- Probe: ES3DV3 - SN3250; ConvF(7.18, 7.18, 7.18); Calibrated: 3/22/2016;
- Sensor-Surface: 3mm (Mechanical Surface Detection)
- Electronics: DAE4 Sn874; Calibrated: 8/24/2015
- Phantom: ELI 4.0; Type: QD OVA 001 BB; Serial: 1057
- DASY52 52.8.8(1222); SEMCAD X 14.6.10(7331)

Configuration_Body_IC-F3400DT/Body Back, P=5W, d=0mm/Area Scan (61x151x1):

Interpolated grid: dx=1.500 mm, dy=1.500 mm
Maximum value of SAR (interpolated) = 0.753 W/kg

Configuration_Body_IC-F3400DT/Body Back, P=5W, d=0mm/Zoom Scan (5x5x7) (5x5x7)/Cube 0:

Measurement grid: dx=7.5mm, dy=7.5mm, dz=5mm
Reference Value = 7.347 V/m; Power Drift = -0.00 dB
Peak SAR (extrapolated) = 0.980 W/kg
SAR(1 g) = 0.681 W/kg; SAR(10 g) = 0.511 W/kg (SAR corrected for target medium)
Maximum value of SAR (measured) = 0.761 W/kg

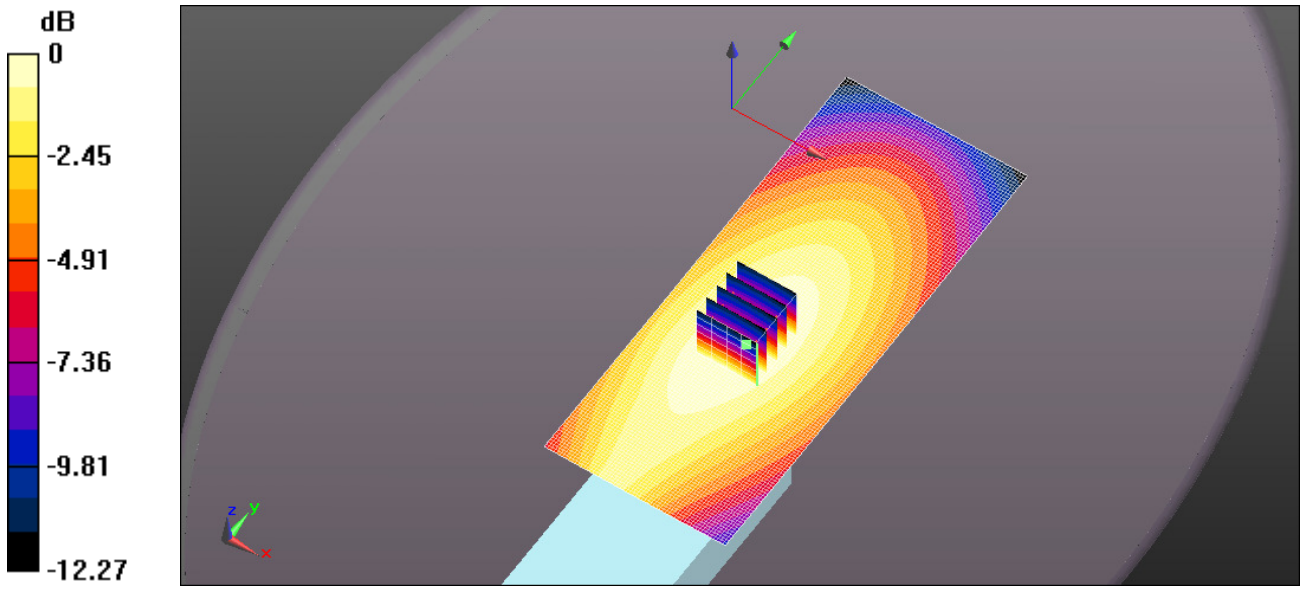

0 dB = 0.753 W/kg = -1.23 dBW/kg

Test Laboratory: Ultratech Group of Labs

FILE NAME: ICOM-435Q BP-283 FA-S67VC 170MHz 174MHz.da52:0

DUT: IC-F3400DT; Type: UHF Transceiver; Serial: 01000151

Communication System: UID 0, CW (0); Frequency: 174 MHz; Duty Cycle: 1:1
Medium parameters used: f = 174 MHz; σ = 0.842 S/m; ε_r = 61.964; ρ = 1000 kg/m^3 ; Phantom section: Flat Section ; Measurement Standard: DASY5 (IEEE/IEC/ANSI C63.19-2007)

DASY Configuration:

- Probe: ES3DV3 - SN3250; ConvF(7.18, 7.18, 7.18); Calibrated: 3/22/2016;
- Sensor-Surface: 3mm (Mechanical Surface Detection)
- Electronics: DAE4 Sn874; Calibrated: 8/24/2015
- Phantom: ELI 4.0; Type: QD OVA 001 BB; Serial: 1057
- DASY52 52.8.8(1222); SEMCAD X 14.6.10(7331)

Configuration_Body_IC-F3400DT/Body Back, P=5W, d=0mm/Area Scan (61x151x1):
Interpolated grid: dx=1.500 mm, dy=1.500 mm
Maximum value of SAR (interpolated) = 2.61 W/kg
Configuration_Body_IC-F3400DT/Body Back, P=5W, d=0mm/Zoom Scan (5x5x7) (5x5x7)/Cube 0: Measurement grid: dx=7.5mm, dy=7.5mm, dz=5mm
Reference Value = 15.45 V/m; Power Drift = -0.04 dB
Peak SAR (extrapolated) = 3.36 W/kg
SAR(1 g) = 2.34 W/kg; SAR(10 g) = 1.75 W/kg (SAR corrected for target medium)
Maximum value of SAR (measured) = 2.61 W/kg

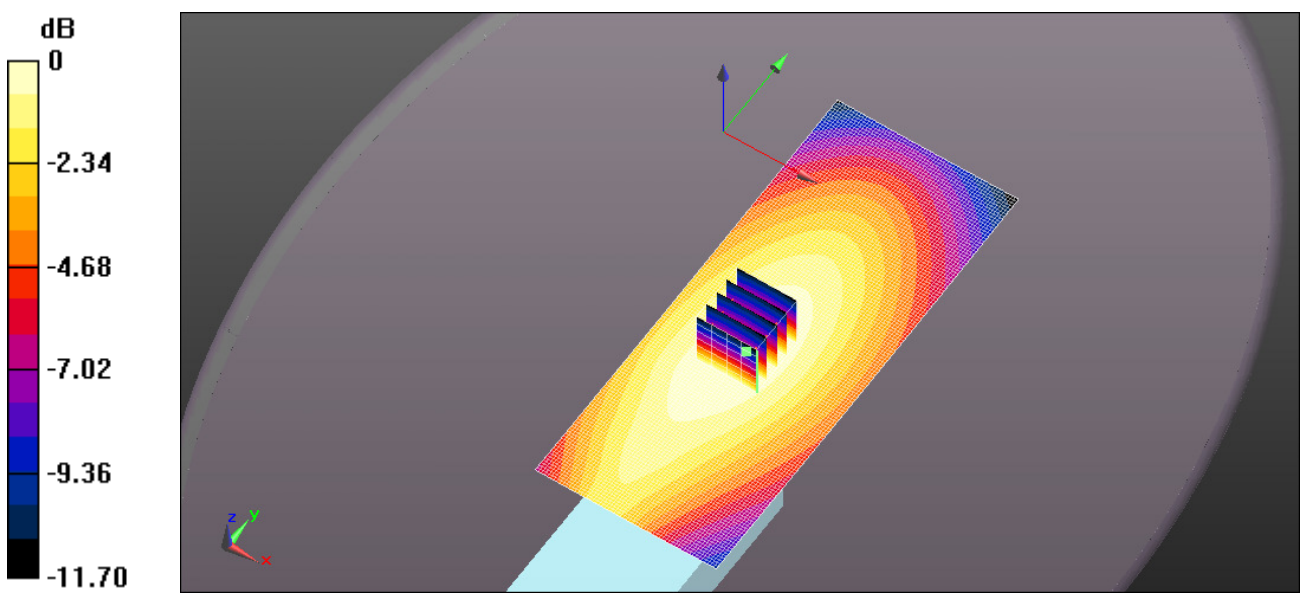

0 dB = 2.61 W/kg = 4.17 dBW/kg