APPENDIX 1

SAR Measurement Data

Table of Contents

EXHIBIT 1. PRESCAN MEASUREMENT SUMMARY 4

FILE NAME: ICOM-442Q BP-284 FA-S76UC 125MM 512MHZ.DA52:0 5
FILE NAME: ICOM-442Q BP-283 FA-S76UC 125MM 512MHZ.DA52:0 6
FILE NAME: ICOM-442Q BP-284 MB-133 FA-S76UC 125MM 512MHZ.DA52:0 7

EXHIBIT 1. HEAD SAR MEASUREMENT SUMMARY 8

FILE NAME: ICOM-442Q BP-284 FA-S82U 450MHZ.DA52:0 9
FILE NAME: ICOM-442Q BP-284 FA-S82U 470MHZ.DA52:0 10
FILE NAME: ICOM-442Q BP-284 FA-S82U 480MHZ.DA52:0 11
FILE NAME: ICOM-442Q BP-284 FA-S82US 450MHZ.DA52:0 12
FILE NAME: ICOM-442Q BP-284 FA-S82US 470MHZ.DA52:0 13
FILE NAME: ICOM-442Q BP-284 FA-S82US 490MHZ.DA52:0 14
FILE NAME: ICOM-442Q BP-284 FA-S83US 490MHZ.DA52:0 16
FILE NAME: ICOM-442Q BP-284 FA-S83US 512MHZ.DA52:0 17
FILE NAME: ICOM-442Q BP-284 FA-S76UC 142MM 450MHZ.DA52:0 18
FILE NAME: ICOM-442Q BP-284 FA-S76UC 142MM 460MHZ.DA52:0 19
FILE NAME: ICOM-442Q BP-284 FA-S76UC 142MM 480MHZ.DA52:0 20
FILE NAME: ICOM-442Q BP-284 FA-S76UC 142MM 500MHZ.DA52:0 21
FILE NAME: ICOM-442Q BP-284 FA-S76UC 142MM 512MHZ.DA52:0 22
FILE NAME: ICOM-442Q BP-284 FA-S76UC 136MM 450MHZ.DA52:0 23
FILE NAME: ICOM-442Q BP-284 FA-S76UC 136MM 460MHZ.DA52:0 24
FILE NAME: ICOM-442Q BP-284 FA-S76UC 136MM 500MHZ.DA52:0 26
FILE NAME: ICOM-442Q BP-284 FA-S76UC 136MM 512MHZ.DA52:0 27
FILE NAME: ICOM-442Q BP-284 FA-S76UC 129MM 450MHZ.DA52:0 28
FILE NAME: ICOM-442Q BP-284 FA-S76UC 129MM 460MHZ.DA52:0 29
FILE NAME: ICOM-442Q BP-284 FA-S76UC 129MM 480MHZ.DA52:0 30
FILE NAME: ICOM-442Q BP-284 FA-S76UC 129MM 500MHZ.DA52:0 31
FILE NAME: ICOM-442Q BP-284 FA-S76UC 129MM 512MHZ.DA52:0 32
FILE NAME: ICOM-442Q BP-284 FA-S76UC 125MM 450MHZ.DA52:0 33
FILE NAME: ICOM-442Q BP-284 FA-S76UC 125MM 460MHZ.DA52:0 34
FILE NAME: ICOM-442Q BP-284 FA-S76UC 125MM 480MHZ.DA52:0 35
FILE NAME: ICOM-442Q BP-284 FA-S76UC 125MM 500MHZ.DA52:0 36

EXHIBIT 2. BODY SAR MEASUREMENT SUMMARY 38

FILE NAME: ICOM-442Q BP-283 FA-S82U 450MHZ.DA52:0 39
FILE NAME: ICOM-442Q BP-283 FA-S82U 460MHZ.DA52:0 40
FILE NAME: ICOM-442Q BP-283 FA-S82U 480MHZ.DA52:0 41
FILE NAME: ICOM-442Q BP-283 FA-S82US 450MHZ.DA52:0 42
FILE NAME: ICOM-442Q BP-283 FA-S82US 490MHZ.DA52:0 44
FILE NAME: ICOM-442Q BP-283 FA-S83U 470MHZ.DA52:0 45
FILE NAME: ICOM-442Q BP-283 FA-S76UC 142MM 450MHZ.DA52:0 48
FILE NAME: ICOM-442Q BP-283 FA-S76UC 142MM 460MHZ.DA52:0 49
FILE NAME: ICOM-442Q BP-283 FA-S76UC 142MM 480MHZ.DA52:0 50
FILE NAME: ICOM-442Q BP-283 FA-S76UC 142MM 500MHZ.DA52:0 51
FILE NAME: ICOM-442Q BP-283 FA-S76UC 136MM 450MHZ.DA52:0 53
FILE NAME: ICOM-442Q BP-283 FA-S76UC 136MM 460MHZ.DA52:0 54
FILE NAME: ICOM-442Q BP-283 FA-S76UC 136MM 4800MHZ.DA52:0 55
FILE NAME: ICOM-442Q BP-283 FA-S76UC 129MM 450MHZ.DA52:0 58
FILE NAME: ICOM-442Q BP-283 FA-S76UC 129MM 460MHZ.DA52:0 59
FILE NAME: ICOM-442Q BP-283 FA-S76UC 129MM 500MHZ.DA52:0 61
FILE NAME: ICOM-442Q BP-283 FA-S76UC 129MM 512MHZ.DA52:0 62
FILE NAME: ICOM-442Q BP-283 FA-S76UC 125MM 450MHZ.DA52:0 63
FILE NAME: ICOM-442Q BP-283 FA-S76UC 125MM 460MHZ.DA52:0 64
FILE NAME: ICOM-442Q BP-283 FA-S76UC 125MM 480MHZ.DA52:0 65
FILE NAME: ICOM-442Q BP-283 FA-S76UC 125MM 500MHZ.DA52:0 66

FILE NAME: ICOM-442Q BP-283 FA-S76UC 125MM 512MHZ.DA52:0 67

EXHIBIT 1. PRESCAN MEASUREMENT SUMMARY

MB-133 with Batteries	Antenna	CH	CH. Freq	BODY SAR1g (W/Kg)	BODY SAR10g (W/Kg)
BP-283	FA-S76UC 125mm	10	512	10.40	7.61
BP-284		10	512	9.85	7.20

BP-283 with Belt Clip	Antenna	CH	CH. Freq	BODY SAR1g (W/Kg)	BODY SAR10g (W/Kg)
MB-133	FA-S76UC 125mm	10	512	10.40	7.61
MB-136		10	512	7.23	5.41

Test Laboratory: Ultratech Group of Labs

FILE NAME: ICOM-442Q BP-284 FA-S76UC 125MM 512MHZ.DA52:0

DUT: IC-F4400DT; Type: UHF Transceiver; Serial: 31000402

Communication System: UID 0, CW (0); Frequency: 512 MHz; Duty Cycle: 1:1
Medium parameters used (interpolated): f = 512 MHz; σ = 0.962 S/m; ε_r = 56.248; ρ = 1000 kg/m^3 ;
Phantom section: Flat Section ; Measurement Standard: DASY5 (IEEE/IEC/ANSI C63.19-2007)

DASY Configuration:

- Probe: ES3DV3 - SN3250; ConvF(6.93, 6.93, 6.93); Calibrated: 3/22/2016;
- Sensor-Surface: 3mm (Mechanical Surface Detection)
- Electronics: DAE4 Sn874; Calibrated: 8/22/2016
- Phantom: ELI 4.0; Type: QD OVA 001 BB; Serial: 1057
- DASY52 52.8.8(1222); SEMCAD X 14.6.10(7331)

Configuration_Body_IC-F4400DT/Body Back, P=5W, d=0mm/Area Scan (61x151x1):

Interpolated grid: dx=1.500 mm, dy=1.500 mm
Maximum value of SAR (interpolated) = 11.2 W/kg

Configuration_Body_IC-F4400DT/Body Back, P=5W, d=0mm/Zoom Scan (5x5x7) (5x5x7)/Cube 0:

Measurement grid: dx=7.5mm, dy=7.5mm, dz=5mm
Reference Value = 110.5 V/m; Power Drift = -0.34 dB
Peak SAR (extrapolated) = 14.0 W/kg
SAR(1 g) = 9.85 W/kg; SAR(10 g) = 7.2 W/kg (SAR corrected for target medium)
Maximum value of SAR (measured) = 11.1 W/kg

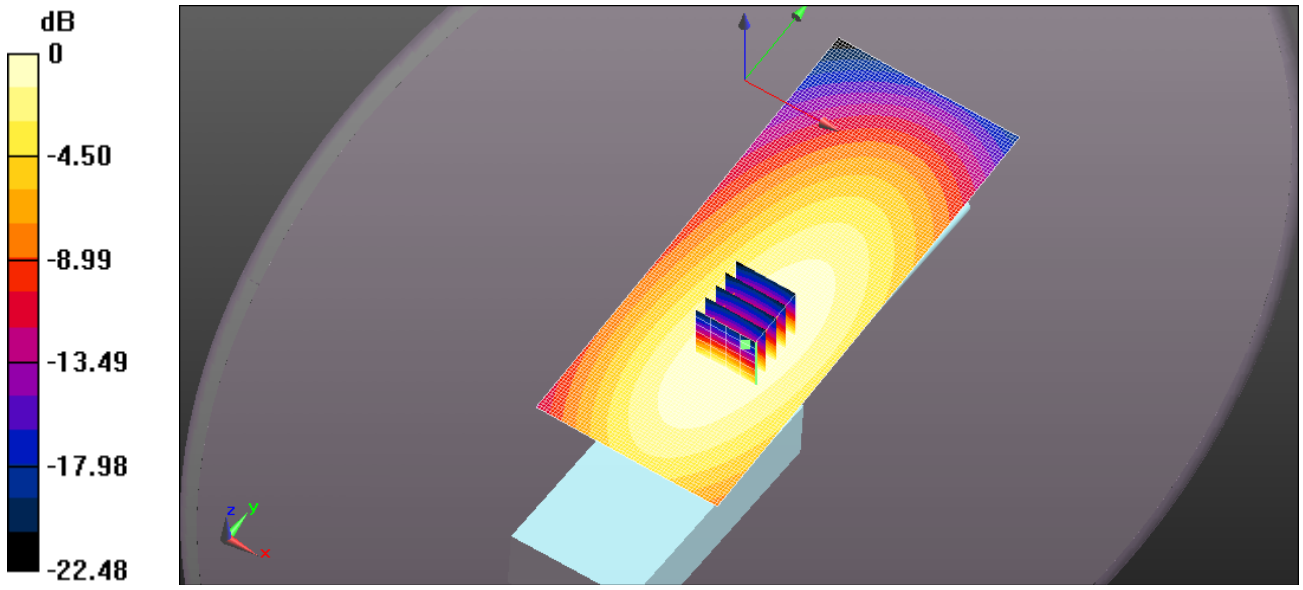

0 dB = 11.2 W/kg = 10.50 dBW/kg

Test Laboratory: Ultratech Group of Labs

FILE NAME: ICOM-442Q BP-283 FA-S76UC 125MM 512MHZ.DA52:0

DUT: IC-F4400DT; Type: UHF Transceiver; Serial: 31000402

Communication System: UID 0, CW (0); Frequency: 512 MHz; Duty Cycle: 1:1
Medium parameters used (interpolated): f = 512 MHz; σ = 0.962 S/m; ε_r = 56.248; ρ = 1000 kg/m^3 ;
Phantom section: Flat Section ; Measurement Standard: DASY5 (IEEE/IEC/ANSI C63.19-2007)

DASY Configuration:

- Probe: ES3DV3 - SN3250; ConvF(6.93, 6.93, 6.93); Calibrated: 3/22/2016;
- Sensor-Surface: 3mm (Mechanical Surface Detection)
- Electronics: DAE4 Sn874; Calibrated: 8/22/2016
- Phantom: ELI 4.0; Type: QD OVA 001 BB; Serial: 1057
- DASY52 52.8.8(1222); SEMCAD X 14.6.10(7331)

Configuration_Body_IC-F4400DT/Body Back, P=5W, d=0mm/Area Scan (61x151x1):

Interpolated grid: dx=1.500 mm, dy=1.500 mm
Maximum value of SAR (interpolated) = 11.8 W/kg

Configuration_Body_IC-F4400DT/Body Back, P=5W, d=0mm/Zoom Scan (5x5x7) (5x5x7)/Cube 0:

Measurement grid: dx=7.5mm, dy=7.5mm, dz=5mm
Reference Value = 110.5 V/m; Power Drift = -0.24 dB
Peak SAR (extrapolated) = 14.7 W/kg
SAR(1 g) = 10.4 W/kg; SAR(10 g) = 7.61 W/kg (SAR corrected for target medium)
Maximum value of SAR (measured) = 11.7 W/kg

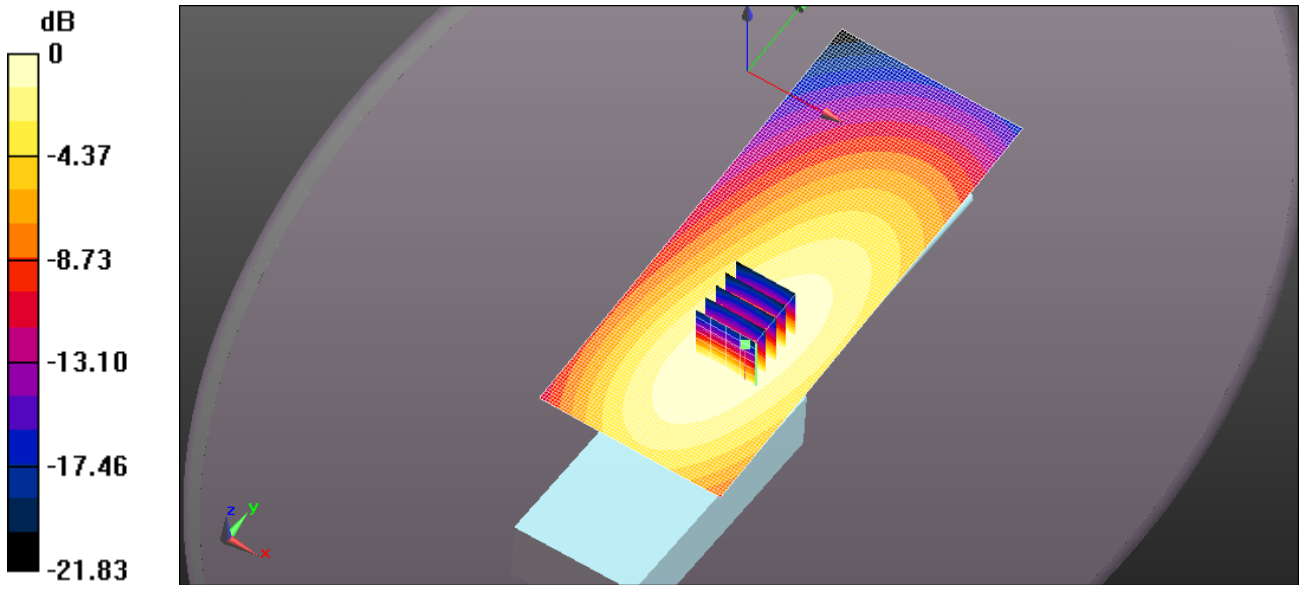

0 dB = 11.8 W/kg = 10.72 dBW/kg

Test Laboratory: Ultratech Group of Labs

FILE NAME: ICOM-442Q BP-284 MB-133 FA-S76UC 125MM 512MHZ.DA52:0

DUT: IC-F4400DT; Type: UHF Transceiver; Serial: 31000402

Communication System: UID 0, CW (0); Frequency: 512 MHz; Duty Cycle: 1:1
Medium parameters used (interpolated): f = 512 MHz; σ = 0.962 S/m; ε_r = 56.248; ρ = 1000 kg/m^3 ;
Phantom section: Flat Section ; Measurement Standard: DASY5 (IEEE/IEC/ANSI C63.19-2007)

DASY Configuration:

- Probe: ES3DV3 - SN3250; ConvF(6.93, 6.93, 6.93); Calibrated: 3/22/2016;
- Sensor-Surface: 3mm (Mechanical Surface Detection)
- Electronics: DAE4 Sn874; Calibrated: 8/22/2016
- Phantom: ELI 4.0; Type: QD OVA 001 BB; Serial: 1057
- DASY52 52.8.8(1222); SEMCAD X 14.6.10(7331)

Configuration_Body_IC-F4400DT/Body Back, P=5W, d=0mm/Area Scan (61x151x1):

Interpolated grid: dx=1.500 mm, dy=1.500 mm
Maximum value of SAR (interpolated) = 8.35 W/kg

Configuration_Body_IC-F4400DT/Body Back, P=5W, d=0mm/Zoom Scan (5x5x7) (5x5x7)/Cube 0:

Measurement grid: dx=7.5mm, dy=7.5mm, dz=5mm
Reference Value = 82.61 V/m; Power Drift = -0.25 dB
Peak SAR (extrapolated) = 10.3 W/kg
SAR(1 g) = 7.32 W/kg; SAR(10 g) = 5.41 W/kg (SAR corrected for target medium)
Maximum value of SAR (measured) = 8.21 W/kg

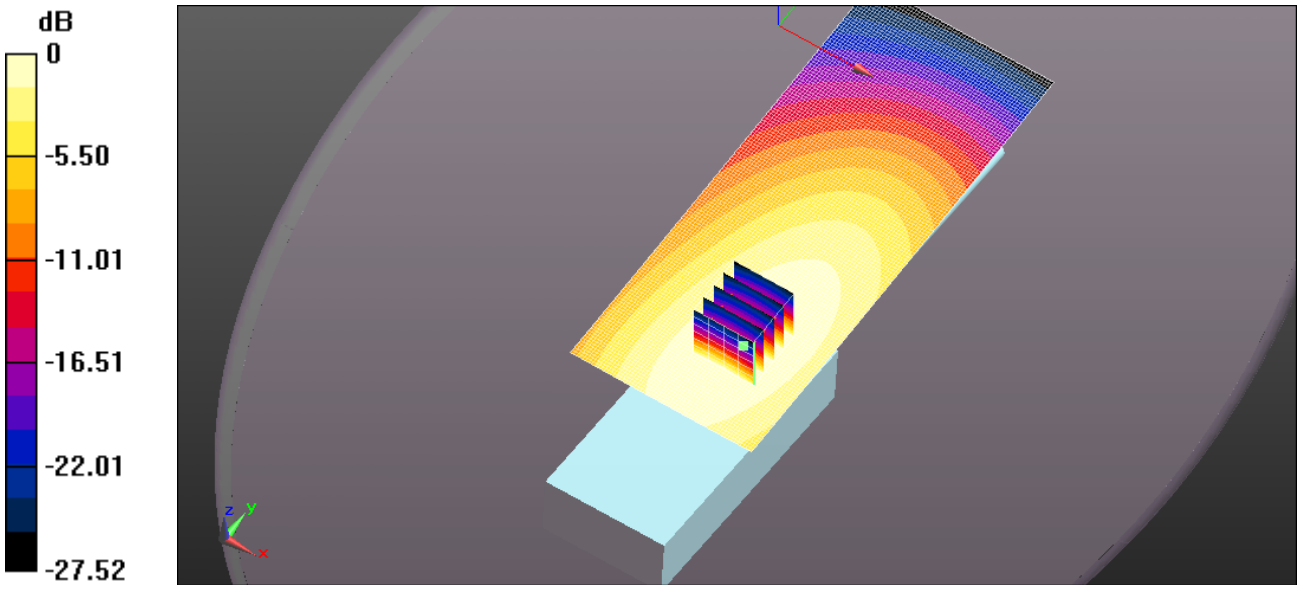

0 dB = 8.35 W/kg = 9.22 dBW/kg

EXHIBIT 1. HEAD SAR MEASUREMENT SUMMARY

Antenna	Power (W)	CH	CH. Freq	HEAD SAR1g (W/Kg)	HEAD SAR10g (W/Kg)
				BP-284	BP-284
			(MHz)	3210mAh	3210mAh
FA-S82U 430-480 MHz	5.24	1	450	4.95	3.64
	5.15	3	470	3.68	2.69
	5.16	4	480	3.11	2.27
FA-S82US 450-490 MHz	5.24	1	450	5.57	4.10
	5.15	3	470	3.84	2.83
	5.17	5	490	2.70	1.98
FA-S83U 470-520 MHz	5.15	3	470	4.20	3.08
	5.17	6	490	1.88	1.39
	5.10	10	512	1.18	0.86
Cut Antenna	**Power (dBm)**	**CH**	**CH. Freq**	**HEAD SAR1g (W/Kg)**	**HEAD SAR10g (W/Kg)**
				BP-284	**BP-284**
			(MHz)	**3210mAh**	**3210mAh**
FA-S76UC 360-520 MHz 142mm 460MHz	5.24	1	450	5.49	4.05
	5.21	2	460	4.98	3.69
	5.16	4	480	5.78	4.26
	5.11	7	500	4.45	3.23
	5.10	10	512	3.76	2.75
FA-S76UC 360-520 MHz 136mm 480MHz	5.24	1	450	9.82	7.13
	5.21	2	460	6.48	4.79
	5.16	4	480	5.29	3.91
	5.11	7	500	5.72	4.21
	5.10	10	512	7.03	5.09
FA-S76UC 360-520 MHz 129mm 500MHz	5.24	1	450	7.26	5.39
	5.21	2	460	6.03	4.50
	5.16	4	480	5.07	3.77
	5.11	7	500	6.63	4.86
	5.10	10	512	5.99	4.38
FA-S76UC 360-520 MHz 125mm 520MHz	5.24	1	450	6.34	4.72
	5.21	2	460	6.29	4.66
	5.16	4	480	4.18	3.27
	5.11	7	500	6.66	4.90
	5.10	10	512	7.99	5.83

Test Laboratory: Ultratech Group of Labs

FILE NAME: ICOM-442Q BP-284 FA-S82U 450MHZ.DA52:0

DUT: IC-F4400DT; Type: UHF Transceiver; Serial: 31000402

Communication System: UID 0, CW (0); Frequency: 450 MHz; Duty Cycle: 1:1
Medium parameters used: f = 450 MHz; σ = 0.844 S/m; ε_r = 44.405; ρ = 1000 kg/m^3 ; Phantom section: Flat Section ; Measurement Standard: DASY5 (IEEE/IEC/ANSI C63.19-2007)

DASY Configuration:

- Probe: ES3DV3 - SN3250; ConvF(7.07, 7.07, 7.07); Calibrated: 3/22/2016;
- Sensor-Surface: 3mm (Mechanical Surface Detection)
- Electronics: DAE4 Sn874; Calibrated: 8/22/2016
- Phantom: ELI 4.0; Type: QD OVA 001 BB; Serial: 1057
- DASY52 52.8.8(1222); SEMCAD X 14.6.10(7331)

Configuration_Head_IC-F4400DT/Head Front, P=5W, d=25mm/Area Scan (61x151x1):

Interpolated grid: dx=1.500 mm, dy=1.500 mm
Maximum value of SAR (interpolated) = 5.42 W/kg

Configuration_Head_IC-F4400DT/Head Front, P=5W, d=25mm/Zoom Scan (5x5x7) (5x5x7)/Cube 0:

Measurement grid: dx=7.5mm, dy=7.5mm, dz=5mm
Reference Value = 72.70 V/m; Power Drift = -0.16 dB
Peak SAR (extrapolated) = 6.66 W/kg
SAR(1 g) = 4.95 W/kg; SAR(10 g) = 3.64 W/kg (SAR corrected for target medium)
Maximum value of SAR (measured) = 5.39 W/kg

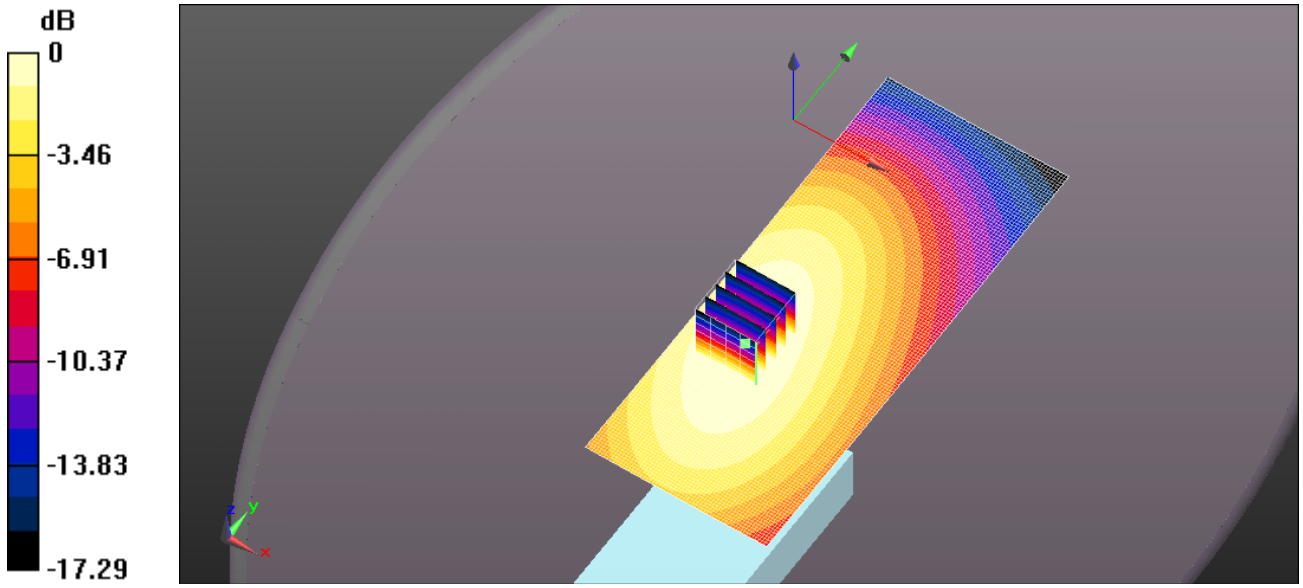

0 dB = 5.42 W/kg = 7.34 dBW/kg

Test Laboratory: Ultratech Group of Labs

FILE NAME: ICOM-442Q BP-284 FA-S82U 470MHZ.DA52:0

DUT: IC-F4400DT; Type: UHF Transceiver; Serial: 31000402

Communication System: UID 0, CW (0); Frequency: 450 MHz; Duty Cycle: 1:1
Medium parameters used: f = 450 MHz; σ = 0.844 S/m; ε_r = 44.405; ρ = 1000 kg/m^3 ; Phantom section: Flat Section ; Measurement Standard: DASY5 (IEEE/IEC/ANSI C63.19-2007)

DASY Configuration:

- Probe: ES3DV3 - SN3250; ConvF(7.07, 7.07, 7.07); Calibrated: 3/22/2016;
- Sensor-Surface: 3mm (Mechanical Surface Detection)
- Electronics: DAE4 Sn874; Calibrated: 8/22/2016
- Phantom: ELI 4.0; Type: QD OVA 001 BB; Serial: 1057
- DASY52 52.8.8(1222); SEMCAD X 14.6.10(7331)

Configuration_Head_IC-F4400DT/Head Front, P=5W, d=25mm/Area Scan (61x151x1):

Interpolated grid: dx=1.500 mm, dy=1.500 mm
Maximum value of SAR (interpolated) = 4.02 W/kg

Configuration_Head_IC-F4400DT/Head Front, P=5W, d=25mm/Zoom Scan (5x5x7) (5x5x7)/Cube 0:

Measurement grid: dx=7.5mm, dy=7.5mm, dz=5mm
Reference Value = 66.30 V/m; Power Drift = -0.18 dB
Peak SAR (extrapolated) = 4.93 W/kg
SAR(1 g) = 3.68 W/kg; SAR(10 g) = 2.69 W/kg (SAR corrected for target medium)
Maximum value of SAR (measured) = 4.01 W/kg

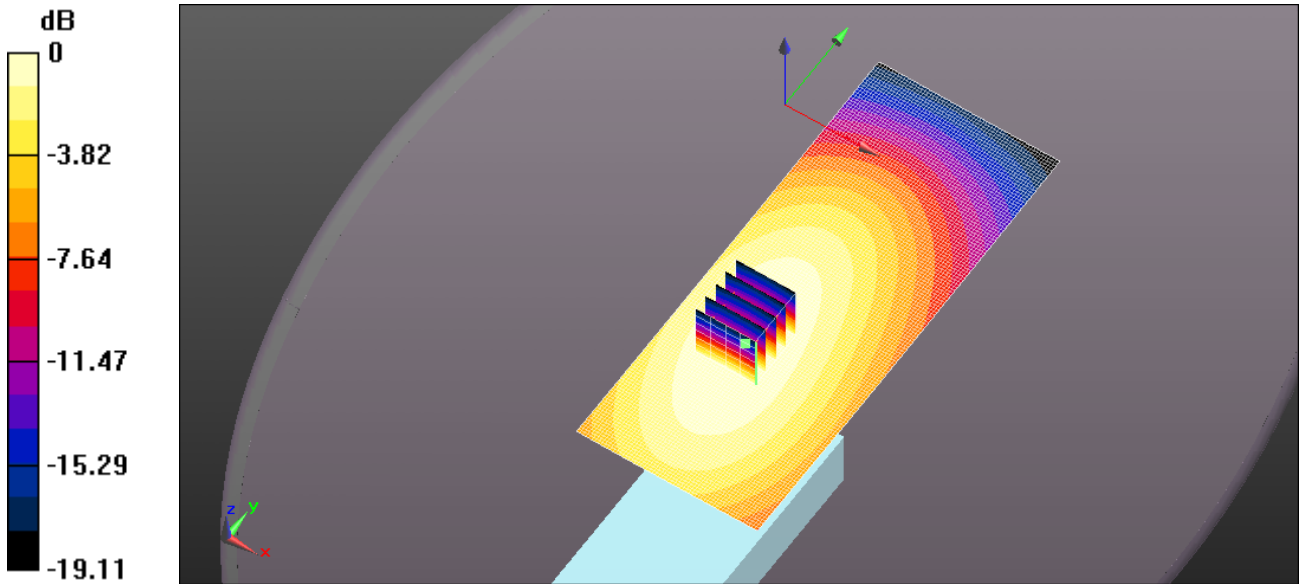

0 dB = 4.02 W/kg = 6.04 dBW/kg

Test Laboratory: Ultratech Group of Labs

FILE NAME: ICOM-442Q BP-284 FA-S82U 480MHZ.DA52:0

DUT: IC-F4400DT; Type: UHF Transceiver; Serial: 31000402

Communication System: UID 0, CW (0); Frequency: 450 MHz; Duty Cycle: 1:1
Medium parameters used: f = 450 MHz; σ = 0.844 S/m; ε_r = 44.405; ρ = 1000 kg/m^3 ; Phantom section: Flat Section ; Measurement Standard: DASY5 (IEEE/IEC/ANSI C63.19-2007)

DASY Configuration:

- Probe: ES3DV3 - SN3250; ConvF(7.07, 7.07, 7.07); Calibrated: 3/22/2016;
- Sensor-Surface: 3mm (Mechanical Surface Detection)
- Electronics: DAE4 Sn874; Calibrated: 8/22/2016
- Phantom: ELI 4.0; Type: QD OVA 001 BB; Serial: 1057
- DASY52 52.8.8(1222); SEMCAD X 14.6.10(7331)

Configuration_Head_IC-F4400DT/Head Front, P=5W, d=25mm/Area Scan (61x151x1):

Interpolated grid: dx=1.500 mm, dy=1.500 mm
Maximum value of SAR (interpolated) = 3.38 W/kg

Configuration_Head_IC-F4400DT/Head Front, P=5W, d=25mm/Zoom Scan (5x5x7) (5x5x7)/Cube 0:

Measurement grid: dx=7.5mm, dy=7.5mm, dz=5mm
Reference Value = 63.37 V/m; Power Drift = -0.15 dB
Peak SAR (extrapolated) = 4.15 W/kg
SAR(1 g) = 3.11 W/kg; SAR(10 g) = 2.27 W/kg (SAR corrected for target medium)
Maximum value of SAR (measured) = 3.38 W/kg

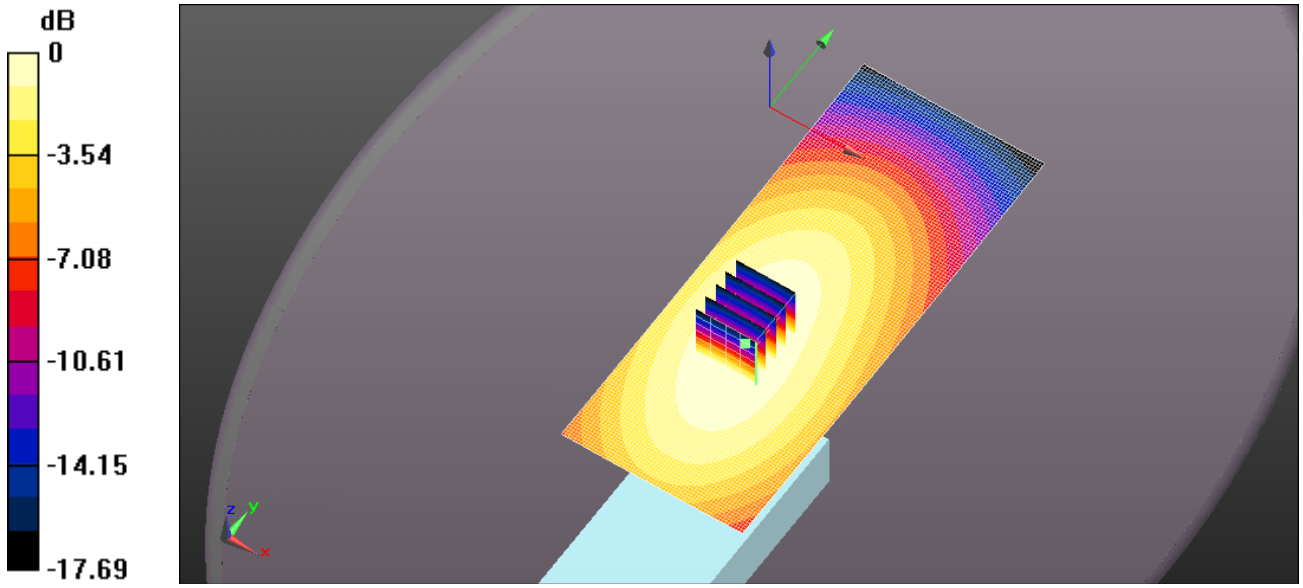

0 dB = 3.38 W/kg = 5.29 dBW/kg

Test Laboratory: Ultratech Group of Labs

FILE NAME: ICOM-442Q BP-284 FA-S82US 450MHZ.DA52:0

DUT: IC-F4400DT; Type: UHF Transceiver; Serial: 31000402

Communication System: UID 0, CW (0); Frequency: 450 MHz; Duty Cycle: 1:1
Medium parameters used: f = 450 MHz; σ = 0.844 S/m; ε_r = 44.405; ρ = 1000 kg/m^3 ; Phantom section: Flat Section ; Measurement Standard: DASY5 (IEEE/IEC/ANSI C63.19-2007)

DASY Configuration:

- Probe: ES3DV3 - SN3250; ConvF(7.07, 7.07, 7.07); Calibrated: 3/22/2016;
- Sensor-Surface: 3mm (Mechanical Surface Detection)
- Electronics: DAE4 Sn874; Calibrated: 8/22/2016
- Phantom: ELI 4.0; Type: QD OVA 001 BB; Serial: 1057
- DASY52 52.8.8(1222); SEMCAD X 14.6.10(7331)

Configuration_Head_IC-F4400DT/Head Front, P=5W, d=25mm/Area Scan (61x151x1):

Interpolated grid: dx=1.500 mm, dy=1.500 mm
Maximum value of SAR (interpolated) = 6.17 W/kg

Configuration_Head_IC-F4400DT/Head Front, P=5W, d=25mm/Zoom Scan (5x5x7) (5x5x7)/Cube 0:

Measurement grid: dx=7.5mm, dy=7.5mm, dz=5mm
Reference Value = 84.05 V/m; Power Drift = -0.12 dB
Peak SAR (extrapolated) = 7.43 W/kg
SAR(1 g) = 5.57 W/kg; SAR(10 g) = 4.1 W/kg (SAR corrected for target medium)
Maximum value of SAR (measured) = 6.08 W/kg

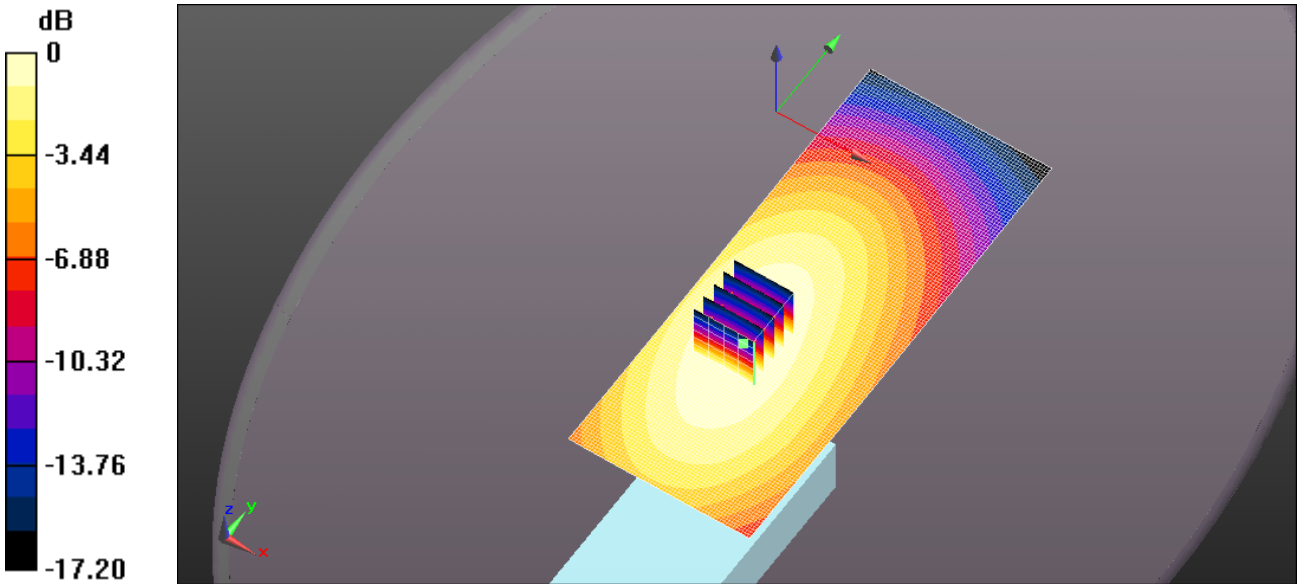

0 dB = 6.17 W/kg = 7.90 dBW/kg

Test Laboratory: Ultratech Group of Labs

FILE NAME: ICOM-442Q BP-284 FA-S82US 470MHZ.DA52:0

DUT: IC-F4400DT; Type: UHF Transceiver; Serial: 31000402

Communication System: UID 0, CW (0); Frequency: 470 MHz; Duty Cycle: 1:1
Medium parameters used: f = 470 MHz; σ = 0.864 S/m; ε_r = 43.903; ρ = 1000 kg/m^3 ; Phantom section: Flat Section ; Measurement Standard: DASY5 (IEEE/IEC/ANSI C63.19-2007)

DASY Configuration:

- Probe: ES3DV3 - SN3250; ConvF(7.07, 7.07, 7.07); Calibrated: 3/22/2016;
- Sensor-Surface: 3mm (Mechanical Surface Detection)
- Electronics: DAE4 Sn874; Calibrated: 8/22/2016
- Phantom: ELI 4.0; Type: QD OVA 001 BB; Serial: 1057
- DASY52 52.8.8(1222); SEMCAD X 14.6.10(7331)

Configuration_Head_IC-F4400DT/Head Front, P=5W, d=25mm/Area Scan (61x151x1):

Interpolated grid: dx=1.500 mm, dy=1.500 mm
Maximum value of SAR (interpolated) = 4.32 W/kg

Configuration_Head_IC-F4400DT/Head Front, P=5W, d=25mm/Zoom Scan (5x5x7) (5x5x7)/Cube 0:

Measurement grid: dx=7.5mm, dy=7.5mm, dz=5mm
Reference Value = 66.76 V/m; Power Drift = -0.26 dB
Peak SAR (extrapolated) = 5.26 W/kg
SAR(1 g) = 3.84 W/kg; SAR(10 g) = 2.83 W/kg (SAR corrected for target medium)
Maximum value of SAR (measured) = 4.29 W/kg

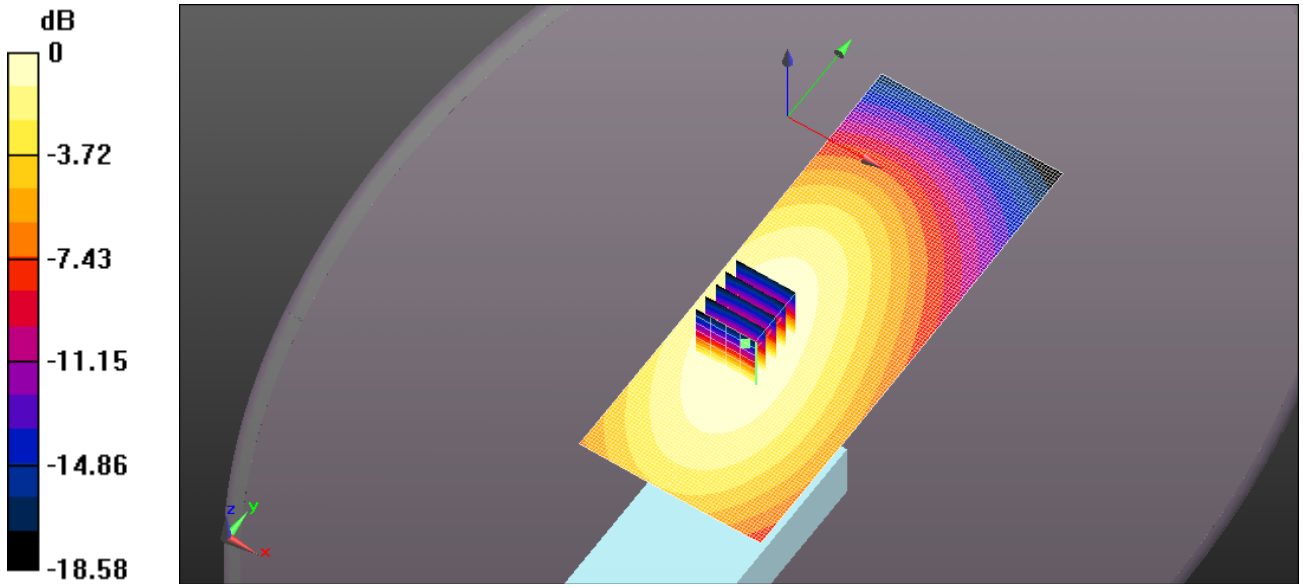

0 dB = 4.32 W/kg = 6.36 dBW/kg

Test Laboratory: Ultratech Group of Labs

FILE NAME: ICOM-442Q BP-284 FA-S82US 490MHZ.DA52:0

DUT: IC-F4400DT; Type: UHF Transceiver; Serial: 31000402

Communication System: UID 0, CW (0); Frequency: 490 MHz; Duty Cycle: 1:1
Medium parameters used: f = 490 MHz; σ = 0.883 S/m; ε_r = 43.443; ρ = 1000 kg/m^3 ; Phantom section: Flat Section ; Measurement Standard: DASY5 (IEEE/IEC/ANSI C63.19-2007)

DASY Configuration:

- Probe: ES3DV3 - SN3250; ConvF(7.07, 7.07, 7.07); Calibrated: 3/22/2016;
- Sensor-Surface: 3mm (Mechanical Surface Detection)
- Electronics: DAE4 Sn874; Calibrated: 8/22/2016
- Phantom: ELI 4.0; Type: QD OVA 001 BB; Serial: 1057
- DASY52 52.8.8(1222); SEMCAD X 14.6.10(7331)

Configuration_Head_IC-F4400DT/Head Front, P=5W, d=25mm/Area Scan (61x151x1):

Interpolated grid: dx=1.500 mm, dy=1.500 mm
Maximum value of SAR (interpolated) = 3.04 W/kg

Configuration_Head_IC-F4400DT/Head Front, P=5W, d=25mm/Zoom Scan (5x5x7) (5x5x7)/Cube 0:

Measurement grid: dx=7.5mm, dy=7.5mm, dz=5mm
Reference Value = 52.48 V/m; Power Drift = -0.02 dB
Peak SAR (extrapolated) = 3.72 W/kg
SAR(1 g) = 2.7 W/kg; SAR(10 g) = 1.98 W/kg (SAR corrected for target medium)
Maximum value of SAR (measured) = 3.03 W/kg

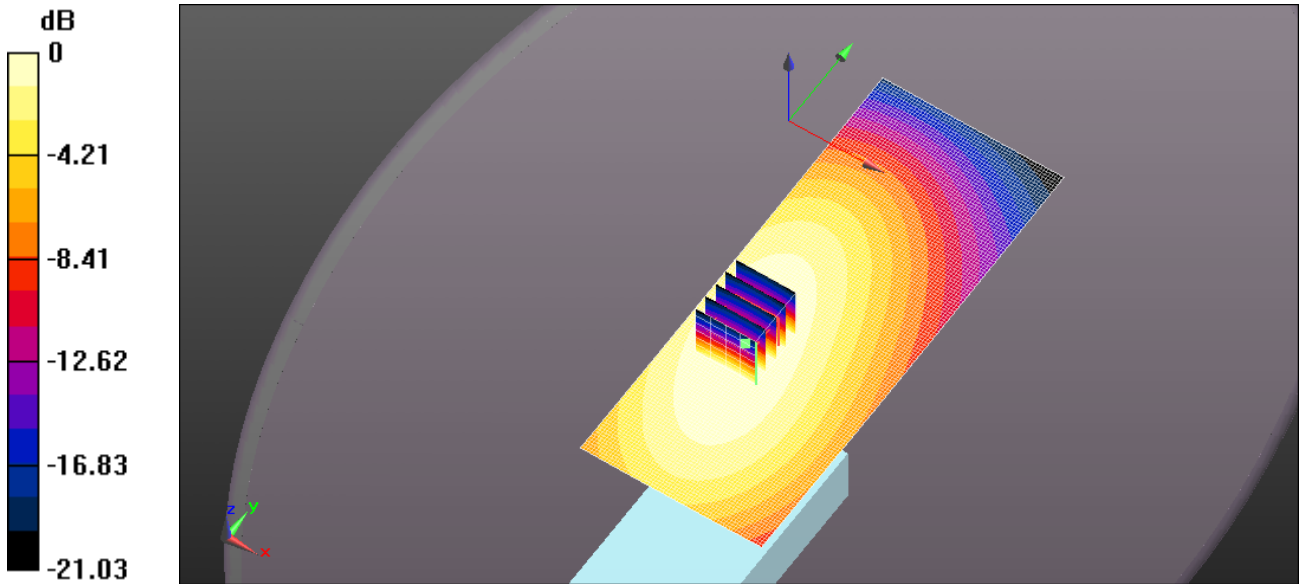

0 dB = 3.04 W/kg = 4.83 dBW/kg

Test Laboratory: Ultratech Group of Labs

File Name: ICOM-442Q BP-284 FA-S83US 470MHz.da52:0

DUT: IC-F4400DT; Type: UHF Transceiver; Serial: 31000402

Communication System: UID 0, CW (0); Frequency: 470 MHz; Duty Cycle: 1:1
Medium parameters used: f = 470 MHz; σ = 0.864 S/m; ε_r = 43.903; ρ = 1000 kg/m^3 ; Phantom section: Flat Section ; Measurement Standard: DASY5 (IEEE/IEC/ANSI C63.19-2007)

DASY Configuration:

- Probe: ES3DV3 - SN3250; ConvF(7.07, 7.07, 7.07); Calibrated: 3/22/2016;
- Sensor-Surface: 3mm (Mechanical Surface Detection)
- Electronics: DAE4 Sn874; Calibrated: 8/22/2016
- Phantom: ELI 4.0; Type: QD OVA 001 BB; Serial: 1057
- DASY52 52.8.8(1222); SEMCAD X 14.6.10(7331)

Configuration_Head_IC-F4400DT/Head Front, P=5W, d=25mm/Area Scan (61x151x1):

Interpolated grid: dx=1.500 mm, dy=1.500 mm
Maximum value of SAR (interpolated) = 4.81 W/kg

Configuration_Head_IC-F4400DT/Head Front, P=5W, d=25mm/Zoom Scan (5x5x7) (5x5x7)/Cube 0:

Measurement grid: dx=7.5mm, dy=7.5mm, dz=5mm
Reference Value = 67.06 V/m; Power Drift = -0.19 dB
Peak SAR (extrapolated) = 5.77 W/kg
SAR(1 g) = 4.2 W/kg; SAR(10 g) = 3.08 W/kg (SAR corrected for target medium)
Maximum value of SAR (measured) = 4.71 W/kg

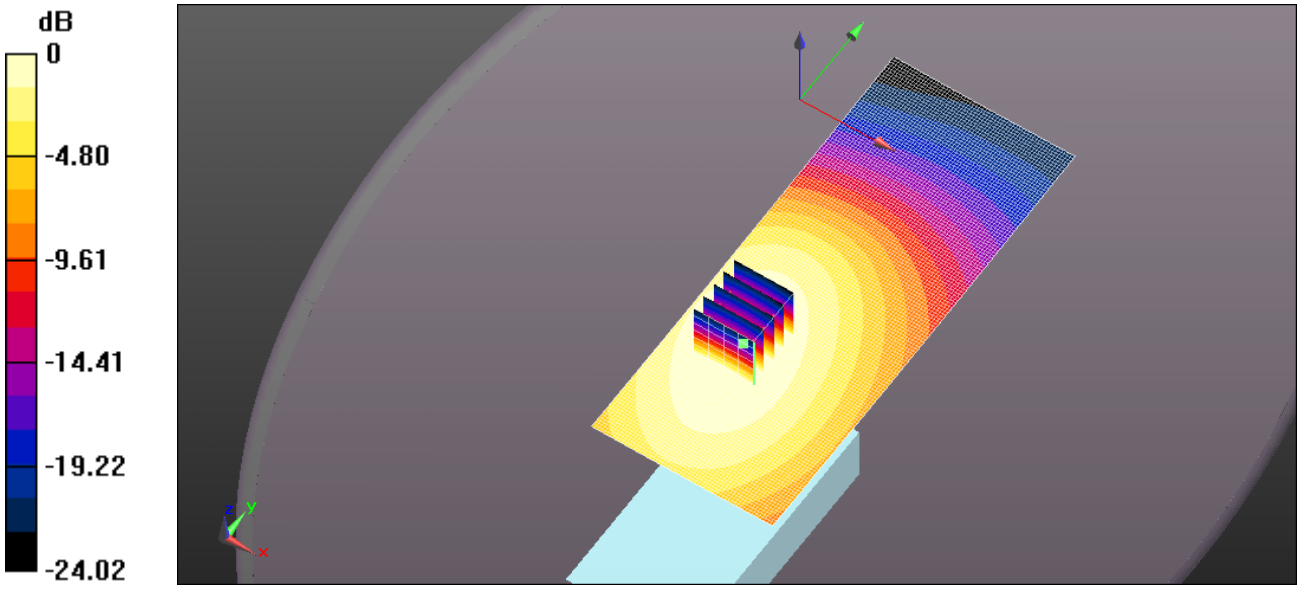

0 dB = 4.81 W/kg = 6.82 dBW/kg

Test Laboratory: Ultratech Group of Labs

FILE NAME: ICOM-442Q BP-284 FA-S83US 490MHZ.DA52:0

DUT: IC-F4400DT; Type: UHF Transceiver; Serial: 31000402

Communication System: UID 0, CW (0); Frequency: 490 MHz; Duty Cycle: 1:1
Medium parameters used: f = 490 MHz; σ = 0.883 S/m; ε_r = 43.443; ρ = 1000 kg/m^3 ; Phantom section: Flat Section ; Measurement Standard: DASY5 (IEEE/IEC/ANSI C63.19-2007)

DASY Configuration:

- Probe: ES3DV3 - SN3250; ConvF(7.07, 7.07, 7.07); Calibrated: 3/22/2016;
- Sensor-Surface: 3mm (Mechanical Surface Detection)
- Electronics: DAE4 Sn874; Calibrated: 8/22/2016
- Phantom: ELI 4.0; Type: QD OVA 001 BB; Serial: 1057
- DASY52 52.8.8(1222); SEMCAD X 14.6.10(7331)

Configuration_Head_IC-F4400DT/Head Front, P=5W, d=25mm/Area Scan (61x151x1):

Interpolated grid: dx=1.500 mm, dy=1.500 mm
Maximum value of SAR (interpolated) = 2.11 W/kg

Configuration_Head_IC-F4400DT/Head Front, P=5W, d=25mm/Zoom Scan (5x5x7) (5x5x7)/Cube 0:

Measurement grid: dx=7.5mm, dy=7.5mm, dz=5mm
Reference Value = 41.79 V/m; Power Drift = -0.20 dB
Peak SAR (extrapolated) = 2.56 W/kg
SAR(1 g) = 1.88 W/kg; SAR(10 g) = 1.39 W/kg (SAR corrected for target medium)
Maximum value of SAR (measured) = 2.11 W/kg

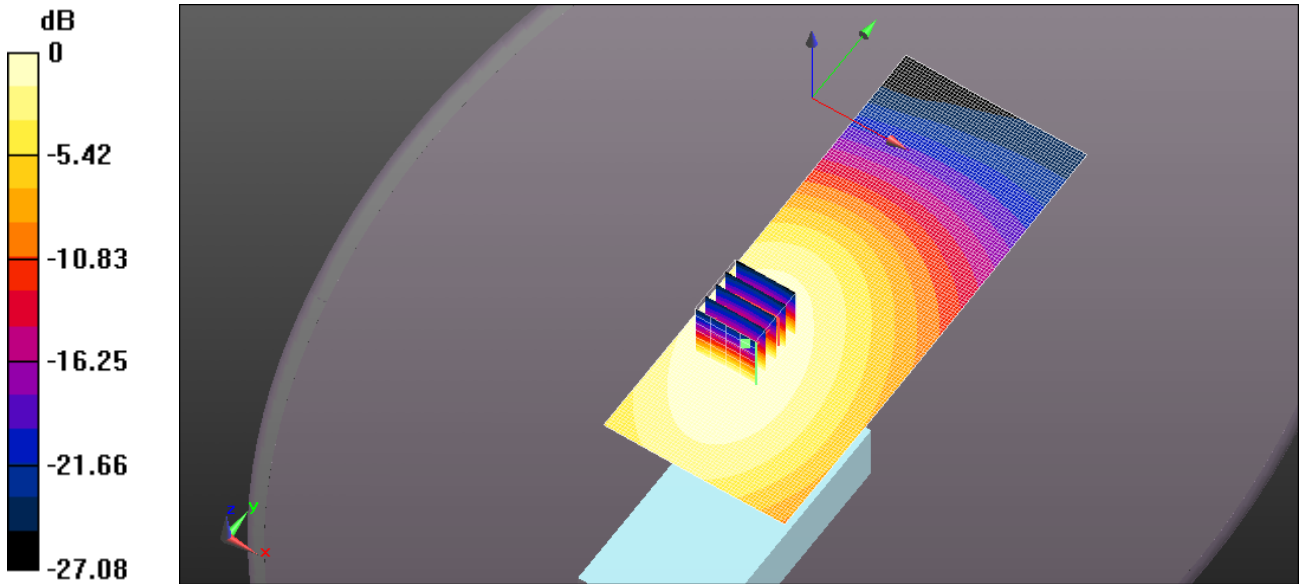

0 dB = 2.11 W/kg = 3.23 dBW/kg

Test Laboratory: Ultratech Group of Labs

FILE NAME: ICOM-442Q BP-284 FA-S83US 512MHZ.DA52:0

DUT: IC-F4400DT; Type: UHF Transceiver; Serial: 31000402

Communication System: UID 0, CW (0); Frequency: 512 MHz; Duty Cycle: 1:1
Medium parameters used (interpolated): f = 512 MHz; σ = 0.901 S/m; ε_r = 42.991; ρ = 1000 kg/m^3 ;
Phantom section: Flat Section ; Measurement Standard: DASY5 (IEEE/IEC/ANSI C63.19-2007)

DASY Configuration:

- Probe: ES3DV3 - SN3250; ConvF(7.07, 7.07, 7.07); Calibrated: 3/22/2016;
- Sensor-Surface: 3mm (Mechanical Surface Detection)
- Electronics: DAE4 Sn874; Calibrated: 8/22/2016
- Phantom: ELI 4.0; Type: QD OVA 001 BB; Serial: 1057
- DASY52 52.8.8(1222); SEMCAD X 14.6.10(7331)

Configuration_Head_IC-F4400DT/Head Front, P=5W, d=25mm/Area Scan (61x151x1):

Interpolated grid: dx=1.500 mm, dy=1.500 mm
Maximum value of SAR (interpolated) = 1.32 W/kg

Configuration_Head_IC-F4400DT/Head Front, P=5W, d=25mm/Zoom Scan (5x5x7) (5x5x7)/Cube 0:

Measurement grid: dx=7.5mm, dy=7.5mm, dz=5mm
Reference Value = 32.99 V/m; Power Drift = -0.09 dB
Peak SAR (extrapolated) = 1.68 W/kg
SAR(1 g) = 1.18 W/kg; SAR(10 g) = 0.855 W/kg (SAR corrected for target medium)

Maximum value of SAR (measured) = 1.32 W/kg

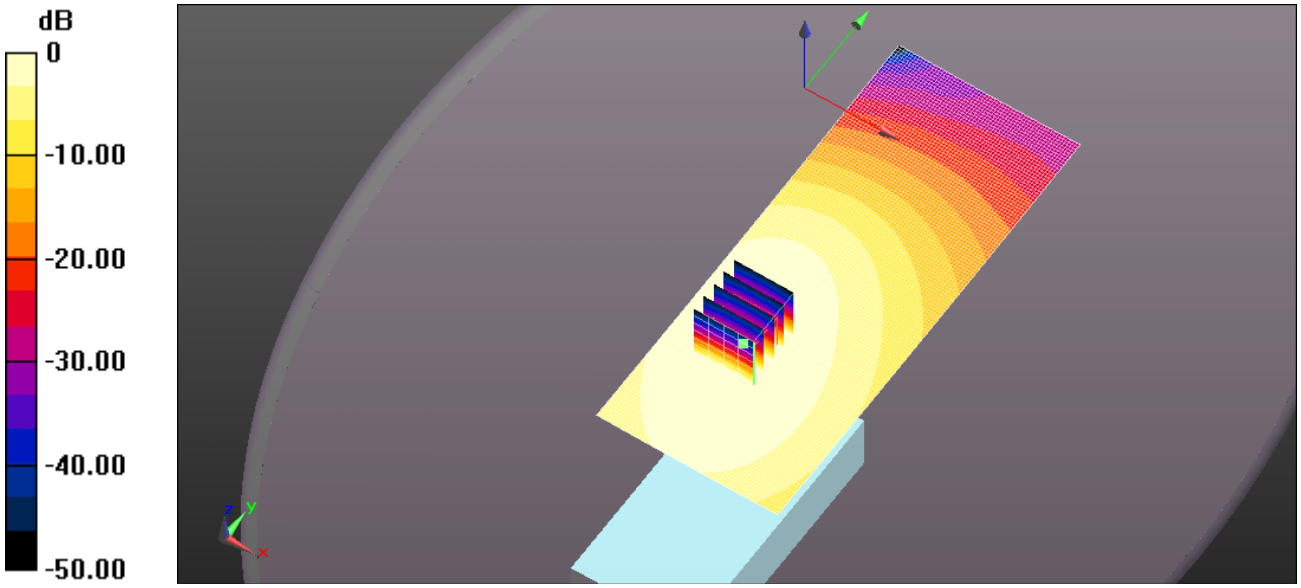

0 dB = 1.32 W/kg = 1.20 dBW/kg

Test Laboratory: Ultratech Group of Labs

FILE NAME: ICOM-442Q BP-284 FA-S76UC 142MM 450MHZ.DA52:0

DUT: IC-F4400DT; Type: UHF Transceiver; Serial: 31000402

Communication System: UID 0, CW (0); Frequency: 450 MHz; Duty Cycle: 1:1
Medium parameters used: f = 450 MHz; σ = 0.844 S/m; ε_r = 44.405; ρ = 1000 kg/m^3 ; Phantom section: Flat Section ; Measurement Standard: DASY5 (IEEE/IEC/ANSI C63.19-2007)

DASY Configuration:

- Probe: ES3DV3 - SN3250; ConvF(7.07, 7.07, 7.07); Calibrated: 3/22/2016;
- Sensor-Surface: 3mm (Mechanical Surface Detection)
- Electronics: DAE4 Sn874; Calibrated: 8/22/2016
- Phantom: ELI 4.0; Type: QD OVA 001 BB; Serial: 1057
- DASY52 52.8.8(1222); SEMCAD X 14.6.10(7331)

Configuration_Head_IC-F4400DT/Head Front, P=5W, d=25mm/Area Scan (61x151x1):

Interpolated grid: dx=1.500 mm, dy=1.500 mm
Maximum value of SAR (interpolated) = 6.02 W/kg

Configuration_Head_IC-F4400DT/Head Front, P=5W, d=25mm/Zoom Scan (5x5x7) (5x5x7)/Cube 0:

Measurement grid: dx=7.5mm, dy=7.5mm, dz=5mm
Reference Value = 82.51 V/m; Power Drift = -0.22 dB
Peak SAR (extrapolated) = 7.25 W/kg
SAR(1 g) = 5.49 W/kg; SAR(10 g) = 4.05 W/kg (SAR corrected for target medium)
Maximum value of SAR (measured) = 5.97 W/kg

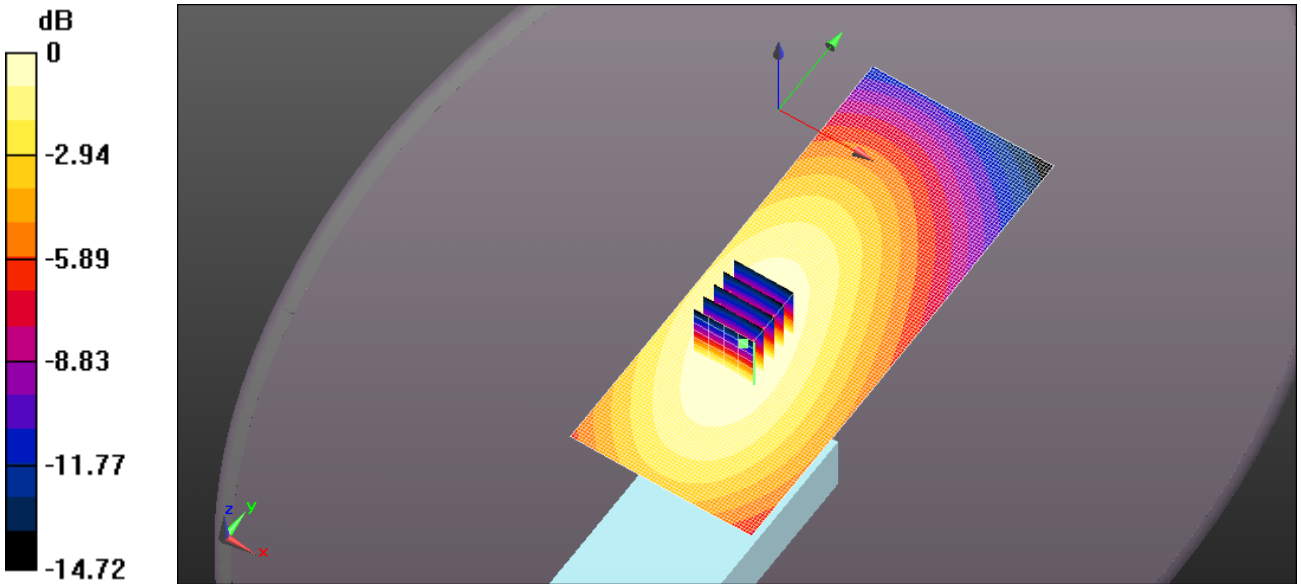

0 dB = 6.02 W/kg = 7.80 dBW/kg

Test Laboratory: Ultratech Group of Labs

FILE NAME: ICOM-442Q BP-284 FA-S76UC 142MM 460MHZ.DA52:0

DUT: IC-F4400DT; Type: UHF Transceiver; Serial: 31000402

Communication System: UID 0, CW (0); Frequency: 460 MHz; Duty Cycle: 1:1
Medium parameters used: f = 460 MHz; σ = 0.854 S/m; ε_r = 44.205; ρ = 1000 kg/m^3 ; Phantom section: Flat Section ; Measurement Standard: DASY5 (IEEE/IEC/ANSI C63.19-2007)

DASY Configuration:

- Probe: ES3DV3 - SN3250; ConvF(7.07, 7.07, 7.07); Calibrated: 3/22/2016;
- Sensor-Surface: 3mm (Mechanical Surface Detection)
- Electronics: DAE4 Sn874; Calibrated: 8/22/2016
- Phantom: ELI 4.0; Type: QD OVA 001 BB; Serial: 1057
- DASY52 52.8.8(1222); SEMCAD X 14.6.10(7331)

Configuration_Head_IC-F4400DT/Head Front, P=5W, d=25mm/Area Scan (61x151x1):

Interpolated grid: dx=1.500 mm, dy=1.500 mm
Maximum value of SAR (interpolated) = 5.62 W/kg

Configuration_Head_IC-F4400DT/Head Front, P=5W, d=25mm/Zoom Scan (5x5x7) (5x5x7)/Cube 0:

Measurement grid: dx=7.5mm, dy=7.5mm, dz=5mm
Reference Value = 79.25 V/m; Power Drift = -0.19 dB
Peak SAR (extrapolated) = 6.74 W/kg
SAR(1 g) = 4.98 W/kg; SAR(10 g) = 3.69 W/kg (SAR corrected for target medium)
Maximum value of SAR (measured) = 5.56 W/kg

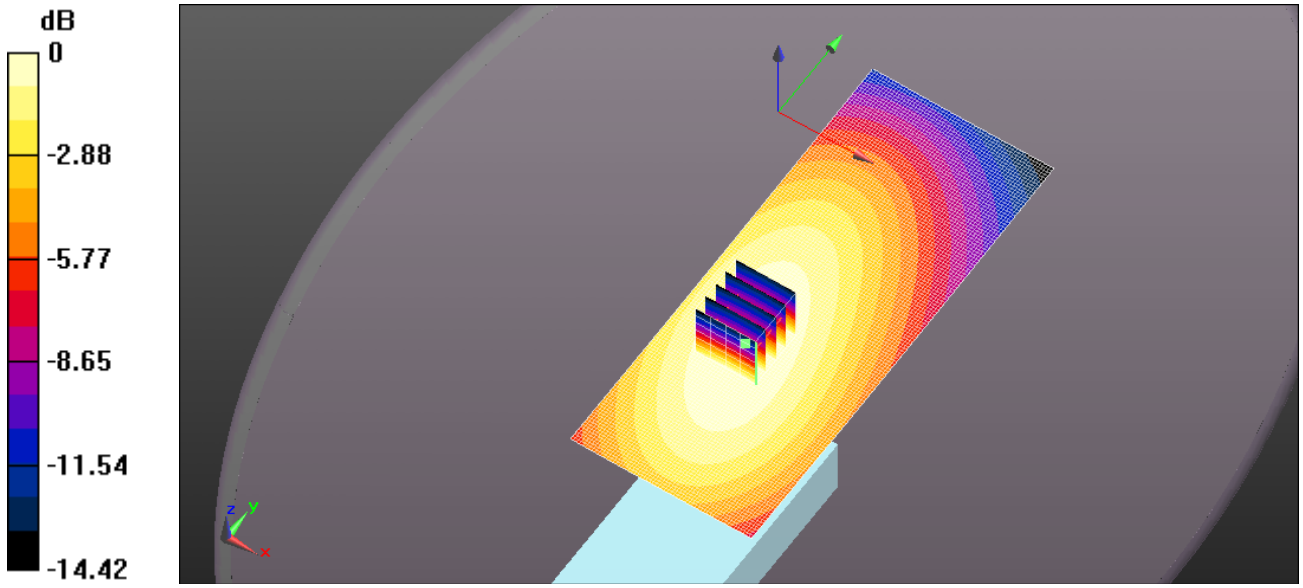

0 dB = 5.62 W/kg = 7.50 dBW/kg

Test Laboratory: Ultratech Group of Labs

FILE NAME: ICOM-442Q BP-284 FA-S76UC 142MM 480MHZ.DA52:0

DUT: IC-F4400DT; Type: UHF Transceiver; Serial: 31000402

Communication System: UID 0, CW (0); Frequency: 480 MHz; Duty Cycle: 1:1
Medium parameters used: f = 480 MHz; σ = 0.874 S/m; ε_r = 43.695; ρ = 1000 kg/m^3 ; Phantom section: Flat Section ; Measurement Standard: DASY5 (IEEE/IEC/ANSI C63.19-2007)

DASY Configuration:

- Probe: ES3DV3 - SN3250; ConvF(7.07, 7.07, 7.07); Calibrated: 3/22/2016;
- Sensor-Surface: 3mm (Mechanical Surface Detection)
- Electronics: DAE4 Sn874; Calibrated: 8/22/2016
- Phantom: ELI 4.0; Type: QD OVA 001 BB; Serial: 1057
- DASY52 52.8.8(1222); SEMCAD X 14.6.10(7331)

Configuration_Head_IC-F4400DT/Head Front, P=5W, d=25mm/Area Scan (61x151x1):

Interpolated grid: dx=1.500 mm, dy=1.500 mm
Maximum value of SAR (interpolated) = 6.52 W/kg

Configuration_Head_IC-F4400DT/Head Front, P=5W, d=25mm/Zoom Scan (5x5x7) (5x5x7)/Cube 0:

Measurement grid: dx=7.5mm, dy=7.5mm, dz=5mm
Reference Value = 83.22 V/m; Power Drift = -0.14 dB
Peak SAR (extrapolated) = 7.97 W/kg
SAR(1 g) = 5.78 W/kg; SAR(10 g) = 4.23 W/kg (SAR corrected for target medium)
Maximum value of SAR (measured) = 6.47 W/kg

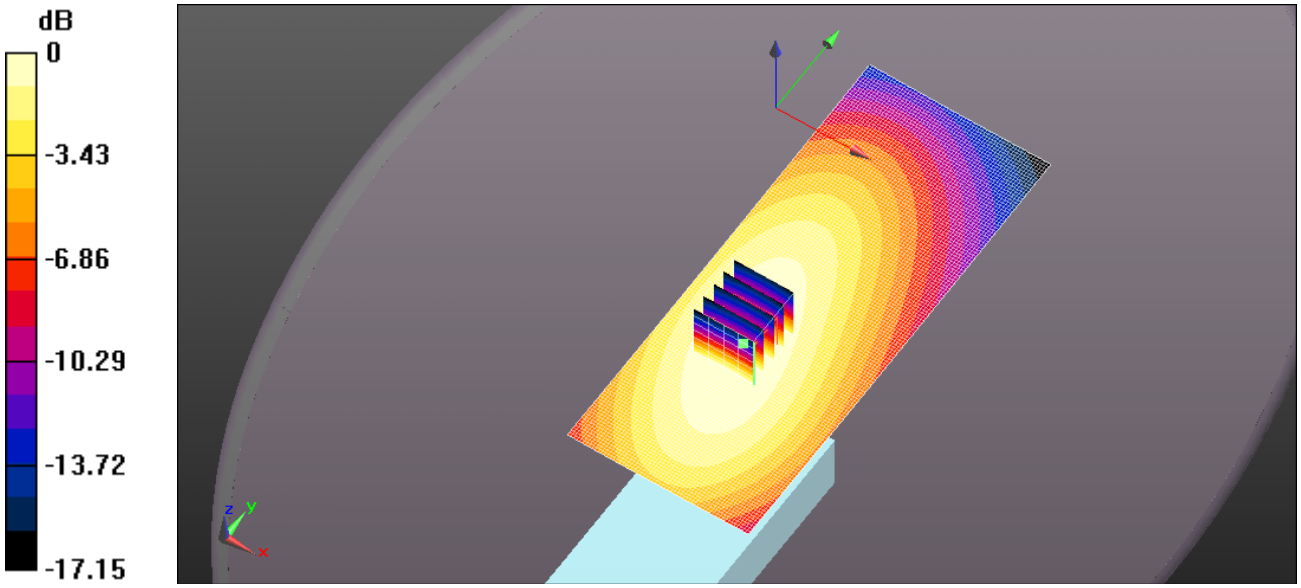

0 dB = 6.52 W/kg = 8.14 dBW/kg

Test Laboratory: Ultratech Group of Labs

FILE NAME: ICOM-442Q BP-284 FA-S76UC 142MM 500MHZ.DA52:0

DUT: IC-F4400DT; Type: UHF Transceiver; Serial: 31000402

Communication System: UID 0, CW (0); Frequency: 500 MHz; Duty Cycle: 1:1
Medium parameters used: f = 500 MHz; σ = 0.892 S/m; ε_r = 43.217; ρ = 1000 kg/m^3 ; Phantom section: Flat Section ; Measurement Standard: DASY5 (IEEE/IEC/ANSI C63.19-2007)

DASY Configuration:

- Probe: ES3DV3 - SN3250; ConvF(7.07, 7.07, 7.07); Calibrated: 3/22/2016;
- Sensor-Surface: 3mm (Mechanical Surface Detection)
- Electronics: DAE4 Sn874; Calibrated: 8/22/2016
- Phantom: ELI 4.0; Type: QD OVA 001 BB; Serial: 1057
- DASY52 52.8.8(1222); SEMCAD X 14.6.10(7331)

Configuration_Head_IC-F4400DT/Head Front, P=5W, d=25mm/Area Scan (61x151x1):

Interpolated grid: dx=1.500 mm, dy=1.500 mm
Maximum value of SAR (interpolated) = 5.03 W/kg

Configuration_Head_IC-F4400DT/Head Front, P=5W, d=25mm/Zoom Scan (5x5x7) (5x5x7)/Cube 0:

Measurement grid: dx=7.5mm, dy=7.5mm, dz=5mm
Reference Value = 67.68 V/m; Power Drift = -0.08 dB
Peak SAR (extrapolated) = 6.35 W/kg
SAR(1 g) = 4.45 W/kg; SAR(10 g) = 3.23 W/kg (SAR corrected for target medium)
Maximum value of SAR (measured) = 5.01 W/kg

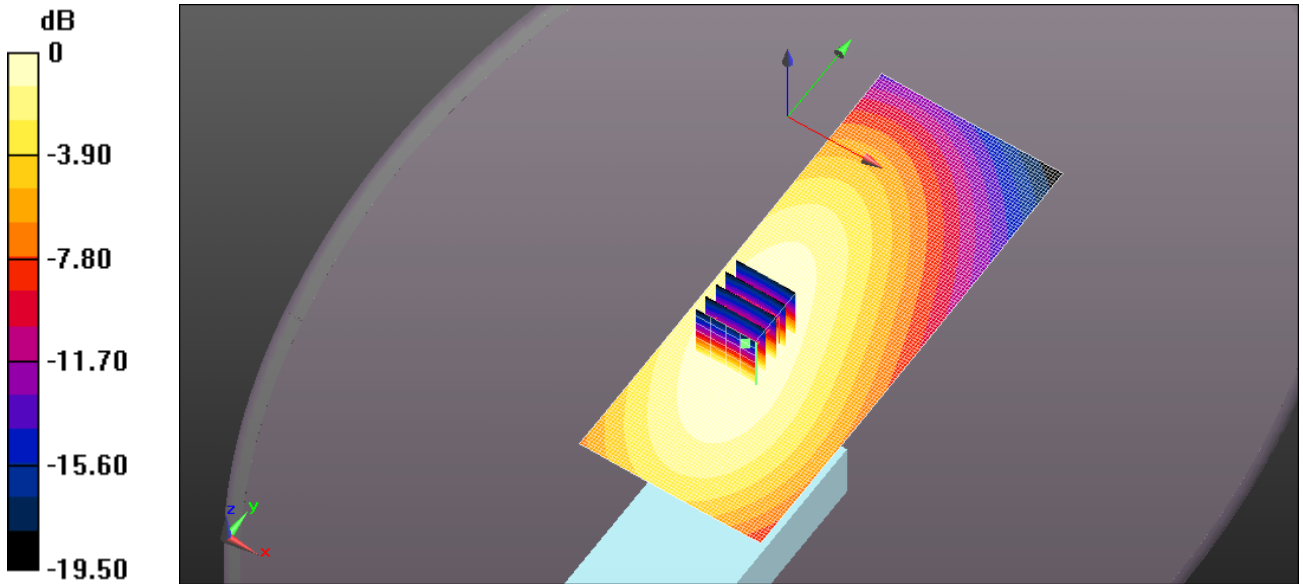

0 dB = 5.03 W/kg = 7.01 dBW/kg

Test Laboratory: Ultratech Group of Labs

FILE NAME: ICOM-442Q BP-284 FA-S76UC 142MM 512MHZ.DA52:0

DUT: IC-F4400DT; Type: UHF Transceiver; Serial: 31000402
Communication System: UID 0, CW (0); Frequency: 512 MHz; Duty Cycle: 1:1
Medium parameters used (interpolated): f = 512 MHz; σ = 0.901 S/m; ε_r = 42.991; ρ = 1000 kg/m^3 ;
Phantom section: Flat Section ; Measurement Standard: DASY5 (IEEE/IEC/ANSI C63.19-2007)

DASY Configuration:

- Probe: ES3DV3 - SN3250; ConvF(7.07, 7.07, 7.07); Calibrated: 3/22/2016;
- Sensor-Surface: 3mm (Mechanical Surface Detection)
- Electronics: DAE4 Sn874; Calibrated: 8/22/2016
- Phantom: ELI 4.0; Type: QD OVA 001 BB; Serial: 1057
- DASY52 52.8.8(1222); SEMCAD X 14.6.10(7331)

Configuration_Head_IC-F4400DT/Head Front, P=5W, d=25mm/Area Scan (61x151x1):
Interpolated grid: dx=1.500 mm, dy=1.500 mm
Maximum value of SAR (interpolated) = 4.25 W/kg\

Configuration_Head_IC-F4400DT/Head Front, P=5W, d=25mm/Zoom Scan (5x5x7) (5x5x7)/Cube 0:
Measurement grid: dx=7.5mm, dy=7.5mm, dz=5mm
Reference Value = 60.40 V/m; Power Drift = -0.04 dB
Peak SAR (extrapolated) = 5.32 W/kg
SAR(1 g) = 3.76 W/kg; SAR(10 g) = 2.75 W/kg (SAR corrected for target medium)
Maximum value of SAR (measured) = 4.23 W/kg

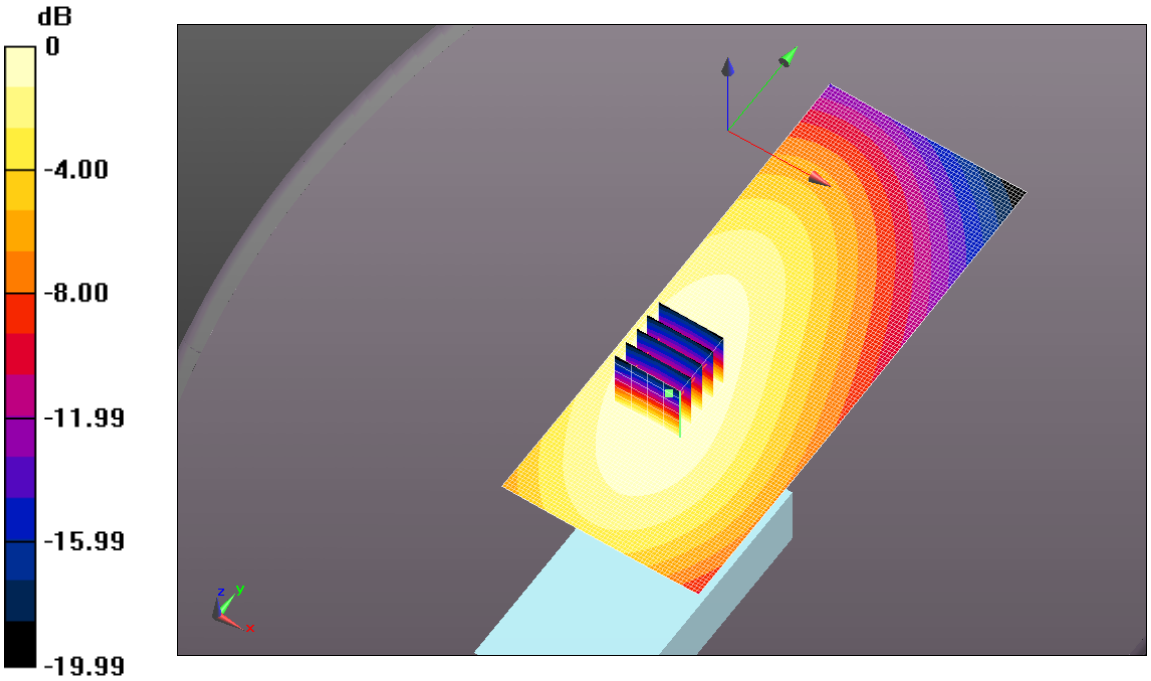

0 dB = 4.25 W/kg = 6.28 dBW/kg

Test Laboratory: Ultratech Group of Labs

FILE NAME: ICOM-442Q BP-284 FA-S76UC 136MM 450MHZ.DA52:0

DUT: IC-F4400DT; Type: UHF Transceiver; Serial: 31000402

Communication System: UID 0, CW (0); Frequency: 450 MHz; Duty Cycle: 1:1
Medium parameters used: f = 450 MHz; σ = 0.844 S/m; ε_r = 44.405; ρ = 1000 kg/m^3 ; Phantom section: Flat Section ; Measurement Standard: DASY5 (IEEE/IEC/ANSI C63.19-2007)

DASY Configuration:

- Probe: ES3DV3 - SN3250; ConvF(7.07, 7.07, 7.07); Calibrated: 3/22/2016;
- Sensor-Surface: 3mm (Mechanical Surface Detection)
- Electronics: DAE4 Sn874; Calibrated: 8/22/2016
- Phantom: ELI 4.0; Type: QD OVA 001 BB; Serial: 1057
- DASY52 52.8.8(1222); SEMCAD X 14.6.10(7331)

Configuration_Head_IC-F4400DT/Head Front, P=5W, d=25mm/Area Scan (61x151x1):

Interpolated grid: dx=1.500 mm, dy=1.500 mm
Maximum value of SAR (interpolated) = 10.8 W/kg

Configuration_Head_IC-F4400DT/Head Front, P=5W, d=25mm/Zoom Scan (5x5x7) (5x5x7)/Cube 0:

Measurement grid: dx=7.5mm, dy=7.5mm, dz=5mm
Reference Value = 104.6 V/m; Power Drift = -0.16 dB
Peak SAR (extrapolated) = 13.2 W/kg
SAR(1 g) = 9.82 W/kg; SAR(10 g) = 7.13 W/kg (SAR corrected for target medium)
Maximum value of SAR (measured) = 10.7 W/kg

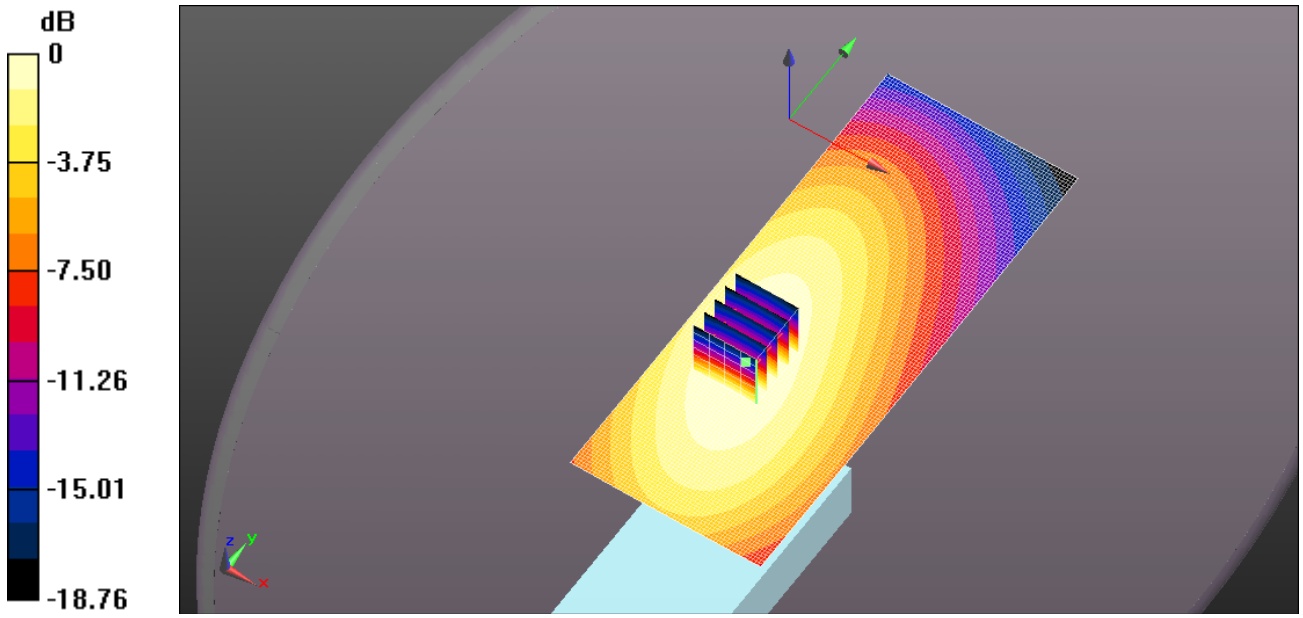

0 dB = 10.8 W/kg = 10.35 dBW/kg

Test Laboratory: Ultratech Group of Labs

FILE NAME: ICOM-442Q BP-284 FA-S76UC 136MM 460MHZ.DA52:0

DUT: IC-F4400DT; Type: UHF Transceiver; Serial: 31000402

Communication System: UID 0, CW (0); Frequency: 460 MHz; Duty Cycle: 1:1
Medium parameters used: f = 460 MHz; σ = 0.854 S/m; ε_r = 44.205; ρ = 1000 kg/m^3 ; Phantom section: Flat Section ; Measurement Standard: DASY5 (IEEE/IEC/ANSI C63.19-2007)

DASY Configuration:

- Probe: ES3DV3 - SN3250; ConvF(7.07, 7.07, 7.07); Calibrated: 3/22/2016;
- Sensor-Surface: 3mm (Mechanical Surface Detection)
- Electronics: DAE4 Sn874; Calibrated: 8/22/2016
- Phantom: ELI 4.0; Type: QD OVA 001 BB; Serial: 1057
- DASY52 52.8.8(1222); SEMCAD X 14.6.10(7331)

Configuration_Head_IC-F4400DT/Head Front, P=5W, d=25mm/Area Scan (61x151x1):

Interpolated grid: dx=1.500 mm, dy=1.500 mm
Maximum value of SAR (interpolated) = 7.35 W/kg

Configuration_Head_IC-F4400DT/Head Front, P=5W, d=25mm/Zoom Scan (5x5x7) (5x5x7)/Cube 0:

Measurement grid: dx=7.5mm, dy=7.5mm, dz=5mm
Reference Value = 86.81 V/m; Power Drift = -0.25 dB
Peak SAR (extrapolated) = 8.92 W/kg
SAR(1 g) = 6.48 W/kg; SAR(10 g) = 4.79 W/kg (SAR corrected for target medium)
Maximum value of SAR (measured) = 7.26 W/kg

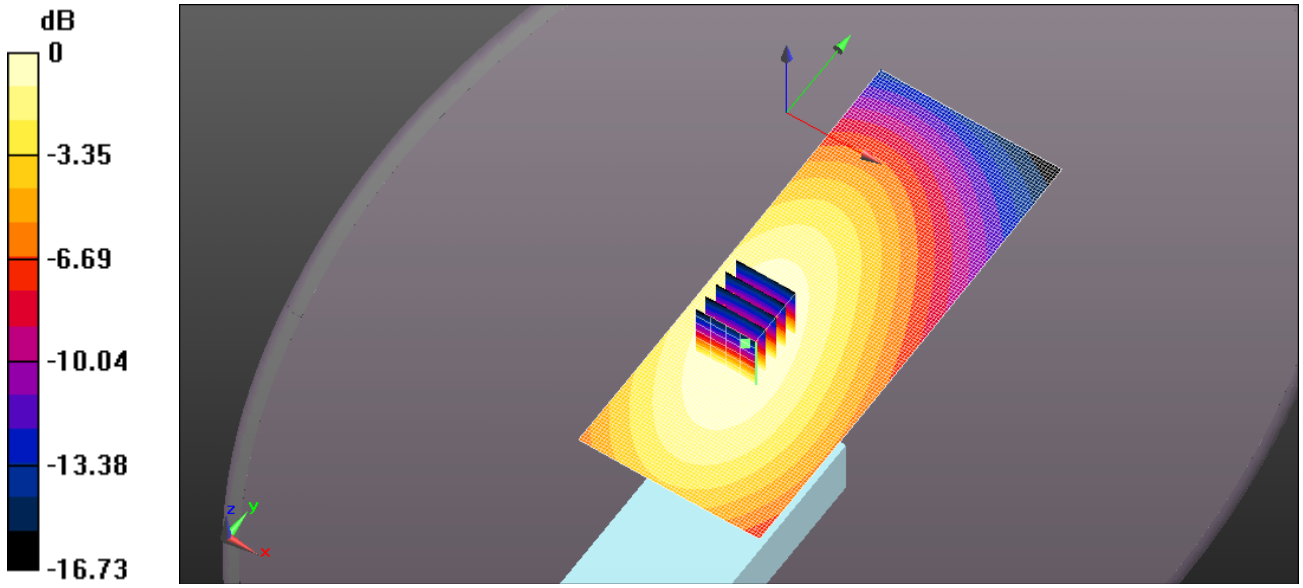

0 dB = 7.35 W/kg = 8.66 dBW/kg

Test Laboratory: Ultratech Group of Labs

File Name: ICOM-442Q BP-284 FA-S76UC 136mm 480MHz.da52:0

DUT: IC-F4400DT; Type: UHF Transceiver; Serial: 31000402

Communication System: UID 0, CW (0); Frequency: 480 MHz; Duty Cycle: 1:1
Medium parameters used: f = 480 MHz; σ = 0.874 S/m; ε_r = 43.695; ρ = 1000 kg/m^3 ; Phantom section: Flat Section ; Measurement Standard: DASY5 (IEEE/IEC/ANSI C63.19-2007)

DASY Configuration:

- Probe: ES3DV3 - SN3250; ConvF(7.07, 7.07, 7.07); Calibrated: 3/22/2016;
- Sensor-Surface: 3mm (Mechanical Surface Detection)
- Electronics: DAE4 Sn874; Calibrated: 8/22/2016
- Phantom: ELI 4.0; Type: QD OVA 001 BB; Serial: 1057
- DASY52 52.8.8(1222); SEMCAD X 14.6.10(7331)

Configuration_Head_IC-F4400DT/Head Front, P=5W, d=25mm/Area Scan (61x151x1):

Interpolated grid: dx=1.500 mm, dy=1.500 mm
Maximum value of SAR (interpolated) = 6.07 W/kg

Configuration_Head_IC-F4400DT/Head Front, P=5W, d=25mm/Zoom Scan (5x5x7) (5x5x7)/Cube 0:

Measurement grid: dx=7.5mm, dy=7.5mm, dz=5mm
Reference Value = 79.37 V/m; Power Drift = -0.16 dB
Peak SAR (extrapolated) = 7.21 W/kg
SAR(1 g) = 5.29 W/kg; SAR(10 g) = 3.91 W/kg (SAR corrected for target medium)
Maximum value of SAR (measured) = 5.92 W/kg

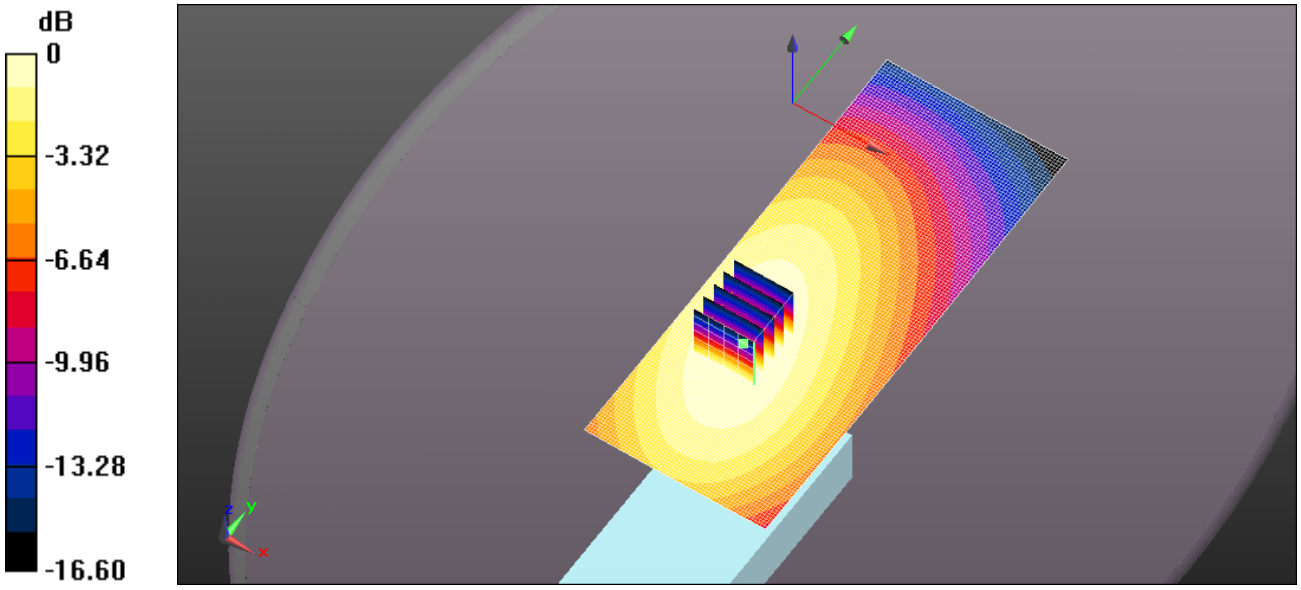

0 dB = 6.07 W/kg = 7.83 dBW/kg

Test Laboratory: Ultratech Group of Labs

FILE NAME: ICOM-442Q BP-284 FA-S76UC 136MM 500MHZ.DA52:0

DUT: IC-F4400DT; Type: UHF Transceiver; Serial: 31000402

Communication System: UID 0, CW (0); Frequency: 500 MHz; Duty Cycle: 1:1
Medium parameters used: f = 500 MHz; σ = 0.892 S/m; ε_r = 43.217; ρ = 1000 kg/m^3 ; Phantom section: Flat Section ; Measurement Standard: DASY5 (IEEE/IEC/ANSI C63.19-2007)

DASY Configuration:

- Probe: ES3DV3 - SN3250; ConvF(7.07, 7.07, 7.07); Calibrated: 3/22/2016;
- Sensor-Surface: 3mm (Mechanical Surface Detection)
- Electronics: DAE4 Sn874; Calibrated: 8/22/2016
- Phantom: ELI 4.0; Type: QD OVA 001 BB; Serial: 1057
- DASY52 52.8.8(1222); SEMCAD X 14.6.10(7331)

Configuration_Head_IC-F4400DT/Head Front, P=5W, d=25mm/Area Scan (61x151x1):

Interpolated grid: dx=1.500 mm, dy=1.500 mm
Maximum value of SAR (interpolated) = 6.48 W/kg

Configuration_Head_IC-F4400DT/Head Front, P=5W, d=25mm/Zoom Scan (5x5x7) (5x5x7)/Cube 0:

Measurement grid: dx=7.5mm, dy=7.5mm, dz=5mm
Reference Value = 80.49 V/m; Power Drift = -0.24 dB
Peak SAR (extrapolated) = 7.97 W/kg
SAR(1 g) = 5.72 W/kg; SAR(10 g) = 4.21 W/kg (SAR corrected for target medium)
Maximum value of SAR (measured) = 6.42 W/kg

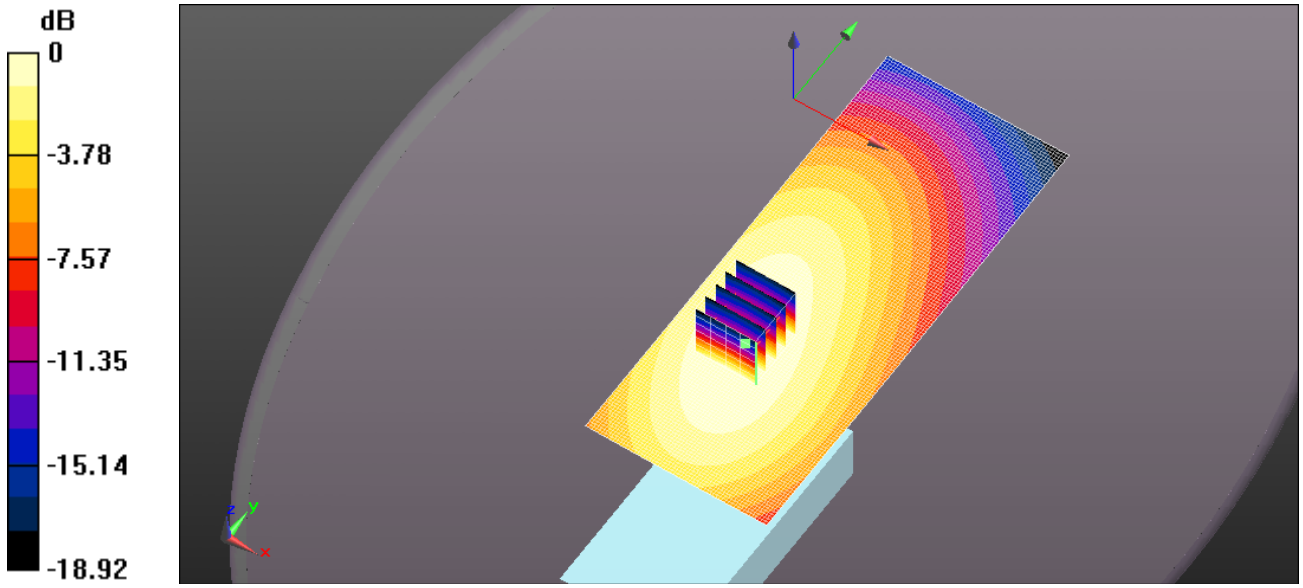

0 dB = 6.48 W/kg = 8.12 dBW/kg

Test Laboratory: Ultratech Group of Labs

FILE NAME: ICOM-442Q BP-284 FA-S76UC 136MM 512MHZ.DA52:0

DUT: IC-F4400DT; Type: UHF Transceiver; Serial: 31000402

Communication System: UID 0, CW (0); Frequency: 512 MHz; Duty Cycle: 1:1
Medium parameters used (interpolated): f = 512 MHz; σ = 0.901 S/m; ε_r = 42.991; ρ = 1000 kg/m^3 ;
Phantom section: Flat Section ; Measurement Standard: DASY5 (IEEE/IEC/ANSI C63.19-2007)

DASY Configuration:

- Probe: ES3DV3 - SN3250; ConvF(7.07, 7.07, 7.07); Calibrated: 3/22/2016;
- Sensor-Surface: 3mm (Mechanical Surface Detection)
- Electronics: DAE4 Sn874; Calibrated: 8/22/2016
- Phantom: ELI 4.0; Type: QD OVA 001 BB; Serial: 1057
- DASY52 52.8.8(1222); SEMCAD X 14.6.10(7331)

Configuration_Head_IC-F4400DT/Head Front, P=5W, d=25mm/Area Scan (61x151x1):

Interpolated grid: dx=1.500 mm, dy=1.500 mm
Maximum value of SAR (interpolated) = 7.94 W/kg

Configuration_Head_IC-F4400DT/Head Front, P=5W, d=25mm/Zoom Scan (5x5x7) (5x5x7)/Cube 0:

Measurement grid: dx=7.5mm, dy=7.5mm, dz=5mm
Reference Value = 81.40 V/m; Power Drift = -0.11 dB
Peak SAR (extrapolated) = 9.97 W/kg
SAR(1 g) = 7.03 W/kg; SAR(10 g) = 5.09 W/kg (SAR corrected for target medium)
Maximum value of SAR (measured) = 7.93 W/kg

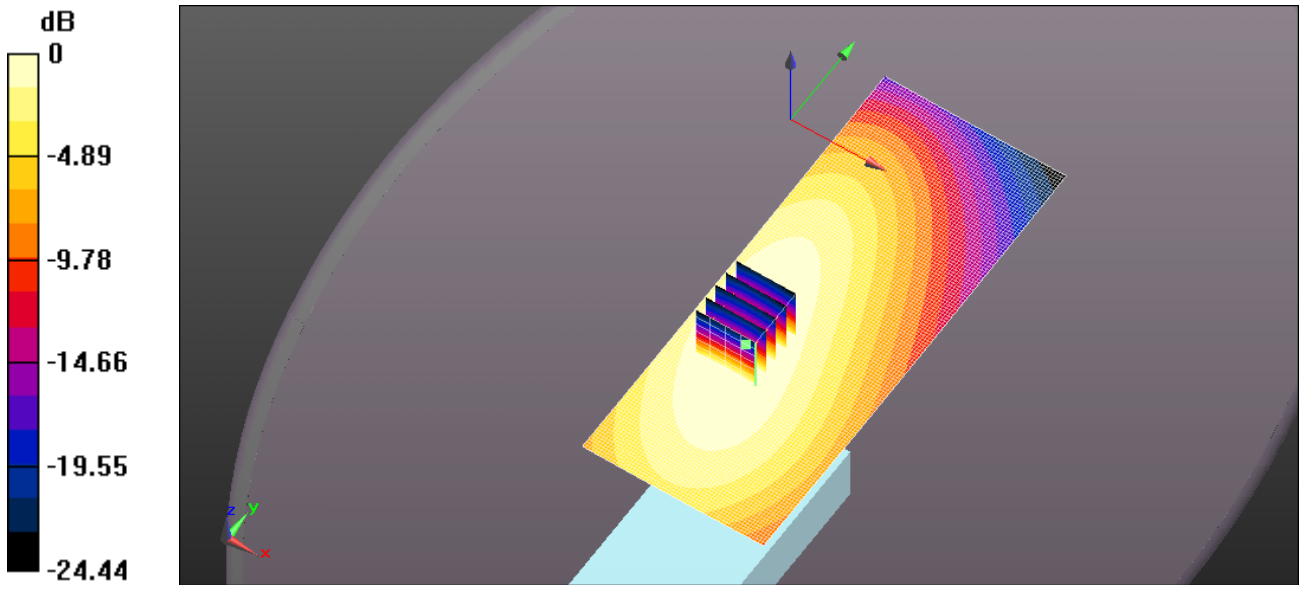

0 dB = 7.94 W/kg = 9.00 dBW/kg

Test Laboratory: Ultratech Group of Labs

FILE NAME: ICOM-442Q BP-284 FA-S76UC 129MM 450MHZ.DA52:0

DUT: IC-F4400DT; Type: UHF Transceiver; Serial: 31000402

Communication System: UID 0, CW (0); Frequency: 450 MHz; Duty Cycle: 1:1
Medium parameters used: f = 450 MHz; σ = 0.844 S/m; ε_r = 44.405; ρ = 1000 kg/m^3 ; Phantom section: Flat Section ; Measurement Standard: DASY5 (IEEE/IEC/ANSI C63.19-2007)

DASY Configuration:

- Probe: ES3DV3 - SN3250; ConvF(7.07, 7.07, 7.07); Calibrated: 3/22/2016;
- Sensor-Surface: 3mm (Mechanical Surface Detection)
- Electronics: DAE4 Sn874; Calibrated: 8/22/2016
- Phantom: ELI 4.0; Type: QD OVA 001 BB; Serial: 1057
- DASY52 52.8.8(1222); SEMCAD X 14.6.10(7331)

Configuration_Head_IC-F4400DT/Head Front, P=5W, d=25mm/Area Scan (61x151x1):

Interpolated grid: dx=1.500 mm, dy=1.500 mm
Maximum value of SAR (interpolated) = 7.86 W/kg

Configuration_Head_IC-F4400DT/Head Front, P=5W, d=25mm/Zoom Scan (5x5x7) (5x5x7)/Cube 0:

Measurement grid: dx=7.5mm, dy=7.5mm, dz=5mm
Reference Value = 87.43 V/m; Power Drift = -0.22 dB
Peak SAR (extrapolated) = 9.43 W/kg
SAR(1 g) = 7.26 W/kg; SAR(10 g) = 5.39 W/kg (SAR corrected for target medium)
Maximum value of SAR (measured) = 7.85 W/kg

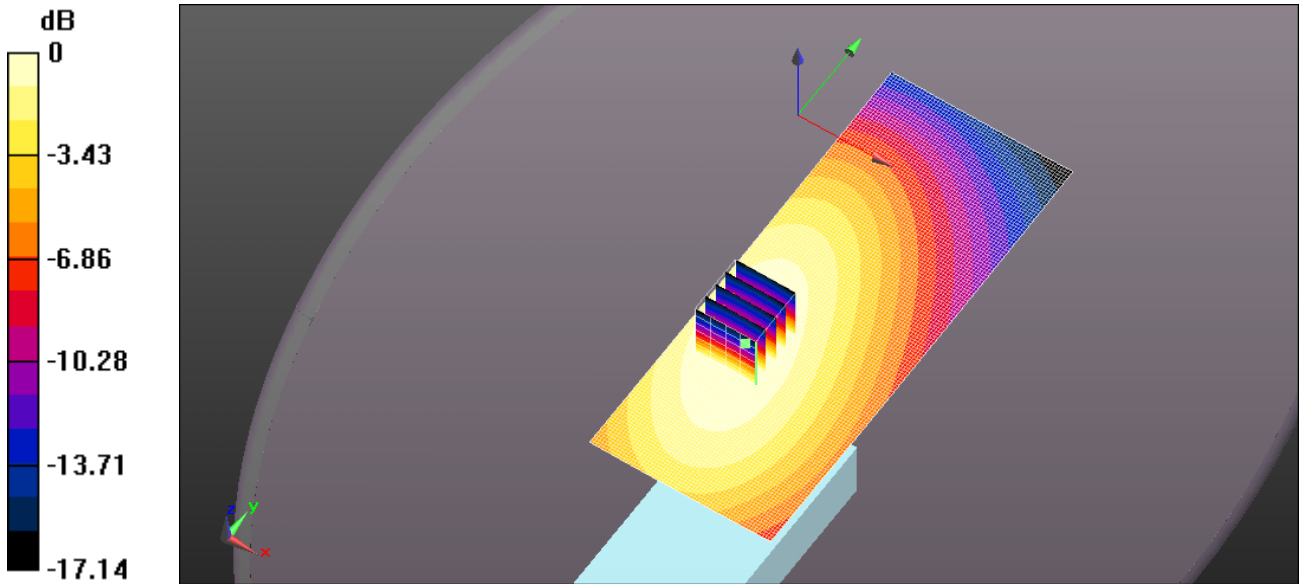

0 dB = 7.86 W/kg = 8.96 dBW/kg

Test Laboratory: Ultratech Group of Labs

FILE NAME: ICOM-442Q BP-284 FA-S76UC 129MM 460MHZ.DA52:0

DUT: IC-F4400DT; Type: UHF Transceiver; Serial: 31000402

Communication System: UID 0, CW (0); Frequency: 460 MHz; Duty Cycle: 1:1
Medium parameters used: f = 460 MHz; σ = 0.854 S/m; ε_r = 44.205; ρ = 1000 kg/m^3 ; Phantom section: Flat Section ; Measurement Standard: DASY5 (IEEE/IEC/ANSI C63.19-2007)

DASY Configuration:

- Probe: ES3DV3 - SN3250; ConvF(7.07, 7.07, 7.07); Calibrated: 3/22/2016;
- Sensor-Surface: 3mm (Mechanical Surface Detection)
- Electronics: DAE4 Sn874; Calibrated: 8/22/2016
- Phantom: ELI 4.0; Type: QD OVA 001 BB; Serial: 1057
- DASY52 52.8.8(1222); SEMCAD X 14.6.10(7331)

Configuration_Head_IC-F4400DT/Head Front, P=5W, d=25mm/Area Scan (61x151x1):

Interpolated grid: dx=1.500 mm, dy=1.500 mm
Maximum value of SAR (interpolated) = 6.82 W/kg

Configuration_Head_IC-F4400DT/Head Front, P=5W, d=25mm/Zoom Scan (5x5x7) (5x5x7)/Cube 0:

Measurement grid: dx=7.5mm, dy=7.5mm, dz=5mm
Reference Value = 84.45 V/m; Power Drift = -0.23 dB
Peak SAR (extrapolated) = 8.02 W/kg
SAR(1 g) = 6.03 W/kg; SAR(10 g) = 4.5 W/kg (SAR corrected for target medium)
Maximum value of SAR (measured) = 6.71 W/kg

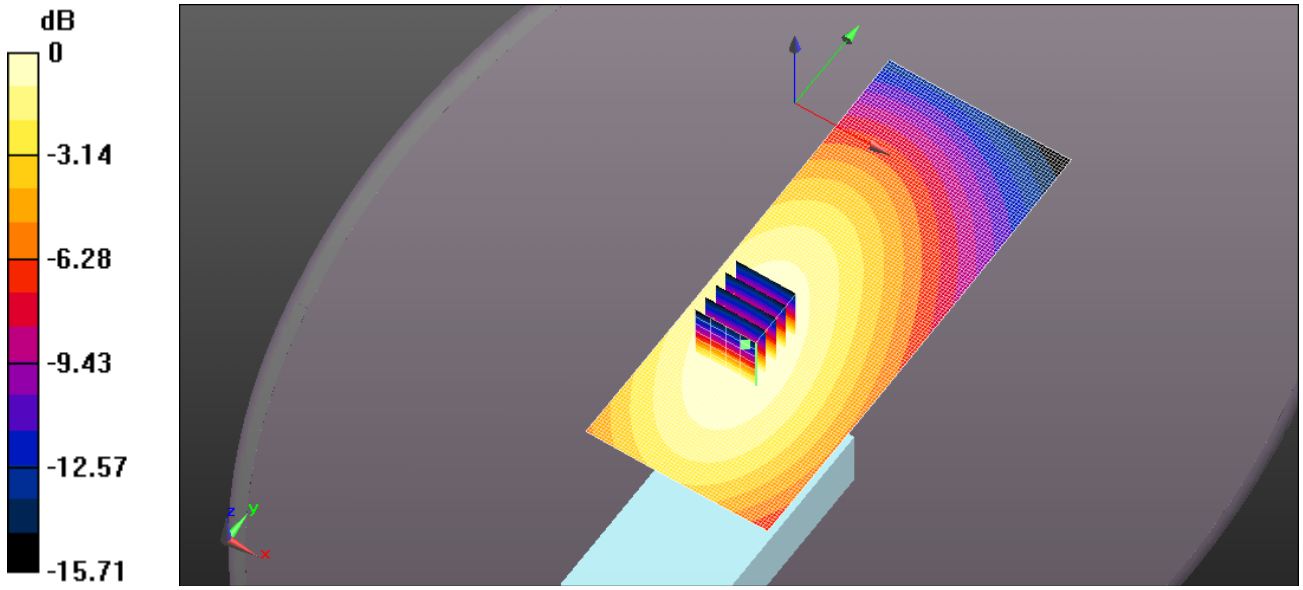

0 dB = 6.82 W/kg = 8.34 dBW/kg

Test Laboratory: Ultratech Group of Labs

FILE NAME: ICOM-442Q BP-284 FA-S76UC 129MM 480MHZ.DA52:0

DUT: IC-F4400DT; Type: UHF Transceiver; Serial: 31000402

Communication System: UID 0, CW (0); Frequency: 480 MHz; Duty Cycle: 1:1
Medium parameters used: f = 480 MHz; σ = 0.874 S/m; ε_r = 43.695; ρ = 1000 kg/m^3 ; Phantom section: Flat Section ; Measurement Standard: DASY5 (IEEE/IEC/ANSI C63.19-2007)

DASY Configuration:

- Probe: ES3DV3 - SN3250; ConvF(7.07, 7.07, 7.07); Calibrated: 3/22/2016;
- Sensor-Surface: 3mm (Mechanical Surface Detection)
- Electronics: DAE4 Sn874; Calibrated: 8/22/2016
- Phantom: ELI 4.0; Type: QD OVA 001 BB; Serial: 1057
- DASY52 52.8.8(1222); SEMCAD X 14.6.10(7331)

Configuration_Head_IC-F4400DT/Head Front, P=5W, d=25mm/Area Scan (61x151x1):

Interpolated grid: dx=1.500 mm, dy=1.500 mm
Maximum value of SAR (interpolated) = 5.73 W/kg

Configuration_Head_IC-F4400DT/Head Front, P=5W, d=25mm/Zoom Scan (5x5x7) (5x5x7)/Cube 0:

Measurement grid: dx=7.5mm, dy=7.5mm, dz=5mm
Reference Value = 76.62 V/m; Power Drift = -0.20 dB
Peak SAR (extrapolated) = 6.81 W/kg
SAR(1 g) = 5.07 W/kg; SAR(10 g) = 3.77 W/kg (SAR corrected for target medium)
Maximum value of SAR (measured) = 5.66 W/kg

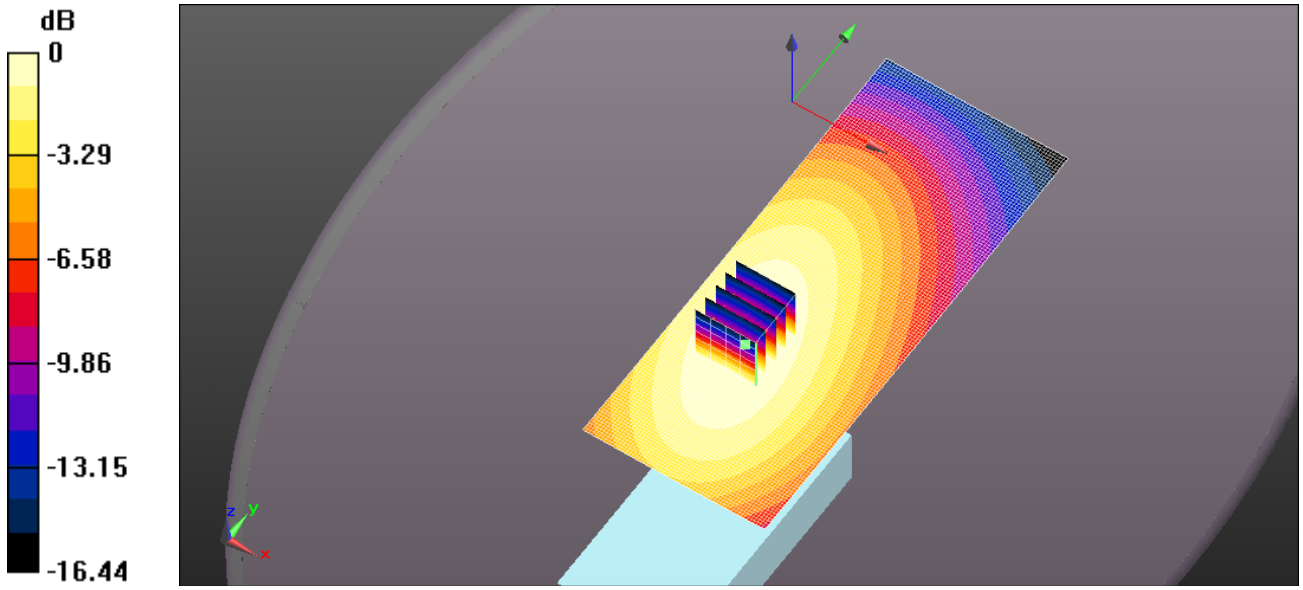

0 dB = 5.73 W/kg = 7.58 dBW/kg

Test Laboratory: Ultratech Group of Labs

FILE NAME: ICOM-442Q BP-284 FA-S76UC 129MM 500MHZ.DA52:0

DUT: IC-F4400DT; Type: UHF Transceiver; Serial: 31000402

Communication System: UID 0, CW (0); Frequency: 500 MHz; Duty Cycle: 1:1
Medium parameters used: f = 500 MHz; σ = 0.892 S/m; ε_r = 43.217; ρ = 1000 kg/m^3 ; Phantom section: Flat Section ; Measurement Standard: DASY5 (IEEE/IEC/ANSI C63.19-2007)

DASY Configuration:

- Probe: ES3DV3 - SN3250; ConvF(7.07, 7.07, 7.07); Calibrated: 3/22/2016;
- Sensor-Surface: 3mm (Mechanical Surface Detection)
- Electronics: DAE4 Sn874; Calibrated: 8/22/2016
- Phantom: ELI 4.0; Type: QD OVA 001 BB; Serial: 1057
- DASY52 52.8.8(1222); SEMCAD X 14.6.10(7331)

Configuration_Head_IC-F4400DT/Head Front, P=5W, d=25mm/Area Scan (61x151x1):

Interpolated grid: dx=1.500 mm, dy=1.500 mm
Maximum value of SAR (interpolated) = 7.60 W/kg

Configuration_Head_IC-F4400DT/Head Front, P=5W, d=25mm/Zoom Scan (5x5x7) (5x5x7)/Cube 0:

Measurement grid: dx=7.5mm, dy=7.5mm, dz=5mm
Reference Value = 83.47 V/m; Power Drift = -0.21 dB
Peak SAR (extrapolated) = 9.29 W/kg
SAR(1 g) = 6.63 W/kg; SAR(10 g) = 4.86 W/kg (SAR corrected for target medium)
Maximum value of SAR (measured) = 7.44 W/kg

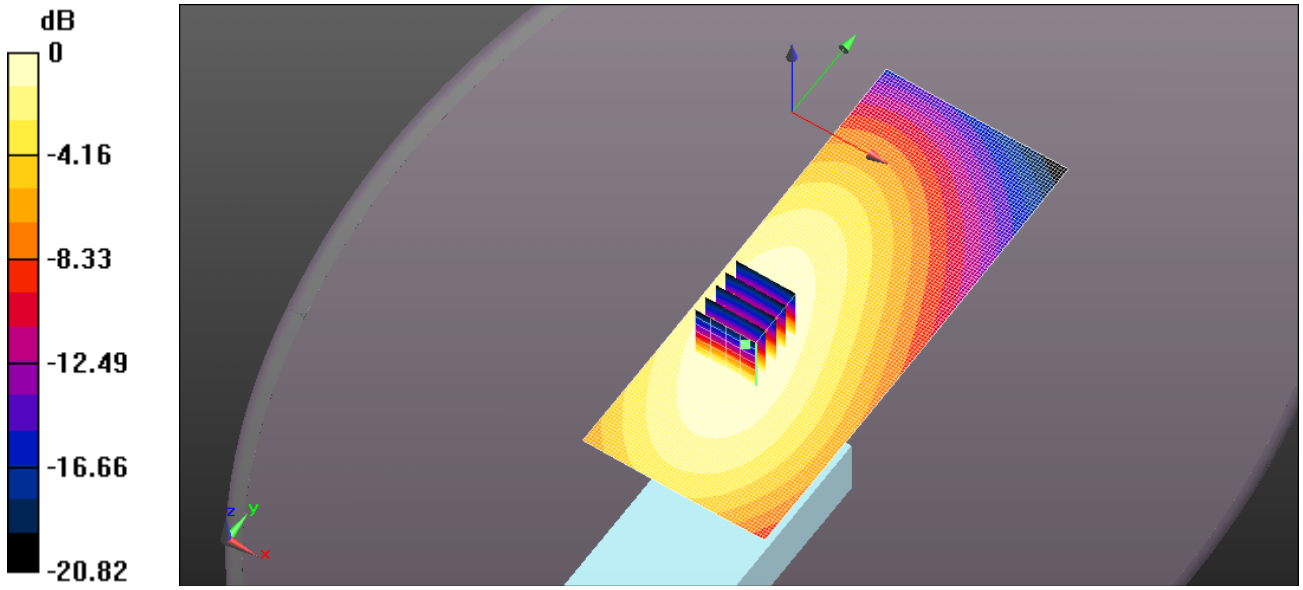

0 dB = 7.60 W/kg = 8.81 dBW/kg

Test Laboratory: Ultratech Group of Labs

FILE NAME: ICOM-442Q BP-284 FA-S76UC 129MM 512MHZ.DA52:0

DUT: IC-F4400DT; Type: UHF Transceiver; Serial: 31000402

Communication System: UID 0, CW (0); Frequency: 512 MHz; Duty Cycle: 1:1
Medium parameters used (interpolated): f = 512 MHz; σ = 0.901 S/m; ε_r = 42.991; ρ = 1000 kg/m^3 ;
Phantom section: Flat Section ; Measurement Standard: DASY5 (IEEE/IEC/ANSI C63.19-2007)

DASY Configuration:

- Probe: ES3DV3 - SN3250; ConvF(7.07, 7.07, 7.07); Calibrated: 3/22/2016;
- Sensor-Surface: 3mm (Mechanical Surface Detection)
- Electronics: DAE4 Sn874; Calibrated: 8/22/2016
- Phantom: ELI 4.0; Type: QD OVA 001 BB; Serial: 1057
- DASY52 52.8.8(1222); SEMCAD X 14.6.10(7331)

Configuration_Head_IC-F4400DT/Head Front, P=5W, d=25mm/Area Scan (61x151x1):

Interpolated grid: dx=1.500 mm, dy=1.500 mm
Maximum value of SAR (interpolated) = 6.74 W/kg

Configuration_Head_IC-F4400DT/Head Front, P=5W, d=25mm/Zoom Scan (5x5x7) (5x5x7)/Cube 0:

Measurement grid: dx=7.5mm, dy=7.5mm, dz=5mm
Reference Value = 75.68 V/m; Power Drift = -0.14 dB
Peak SAR (extrapolated) = 8.36 W/kg
SAR(1 g) = 5.99 W/kg; SAR(10 g) = 4.38 W/kg (SAR corrected for target medium)
Maximum value of SAR (measured) = 6.73 W/kg

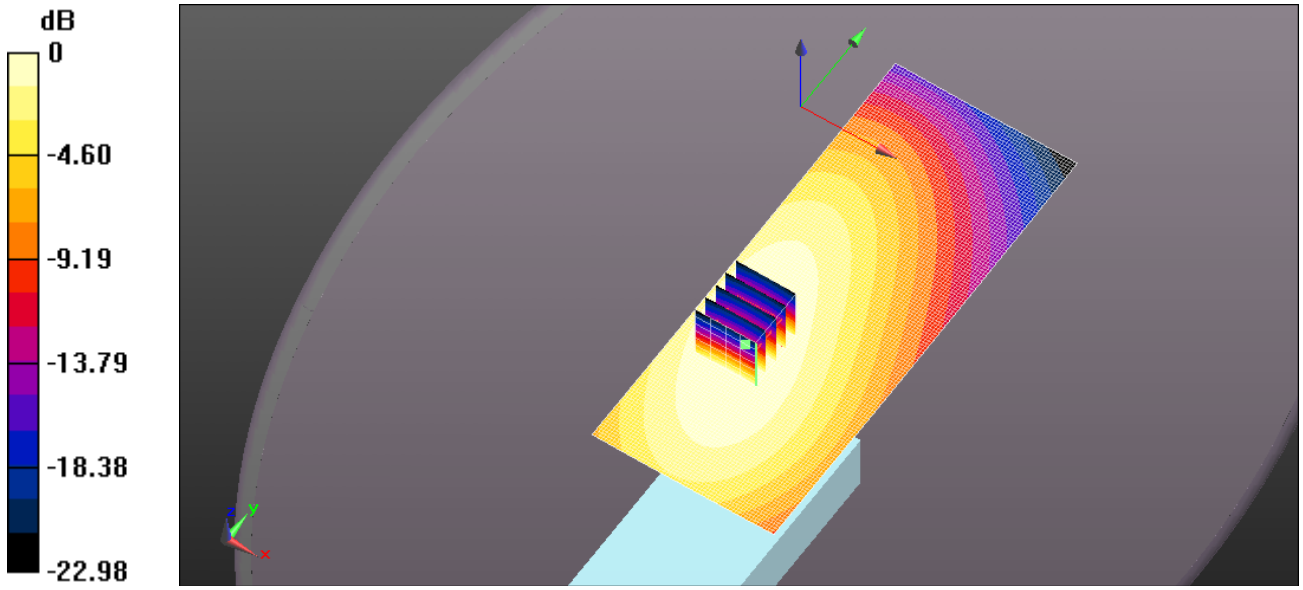

0 dB = 6.74 W/kg = 8.29 dBW/kg

Test Laboratory: Ultratech Group of Labs

FILE NAME: ICOM-442Q BP-284 FA-S76UC 125MM 450MHZ.DA52:0

DUT: IC-F4400DT; Type: UHF Transceiver; Serial: 31000402

Communication System: UID 0, CW (0); Frequency: 450 MHz; Duty Cycle: 1:1
Medium parameters used: f = 450 MHz; σ = 0.844 S/m; ε_r = 44.405; ρ = 1000 kg/m^3 ; Phantom section: Flat Section ; Measurement Standard: DASY5 (IEEE/IEC/ANSI C63.19-2007)

DASY Configuration:

- Probe: ES3DV3 - SN3250; ConvF(7.07, 7.07, 7.07); Calibrated: 3/22/2016;
- Sensor-Surface: 3mm (Mechanical Surface Detection)
- Electronics: DAE4 Sn874; Calibrated: 8/22/2016
- Phantom: ELI 4.0; Type: QD OVA 001 BB; Serial: 1057
- DASY52 52.8.8(1222); SEMCAD X 14.6.10(7331)

Configuration_Head_IC-F4400DT/Head Front, P=5W, d=25mm/Area Scan (61x151x1):

Interpolated grid: dx=1.500 mm, dy=1.500 mm
Maximum value of SAR (interpolated) = 7.11 W/kg

Configuration_Head_IC-F4400DT/Head Front, P=5W, d=25mm/Zoom Scan (5x5x7) (5x5x7)/Cube 0:

Measurement grid: dx=7.5mm, dy=7.5mm, dz=5mm
Reference Value = 88.14 V/m; Power Drift = -0.19 dB
Peak SAR (extrapolated) = 8.22 W/kg
SAR(1 g) = 6.34 W/kg; SAR(10 g) = 4.72 W/kg (SAR corrected for target medium)
Maximum value of SAR (measured) = 6.87 W/kg

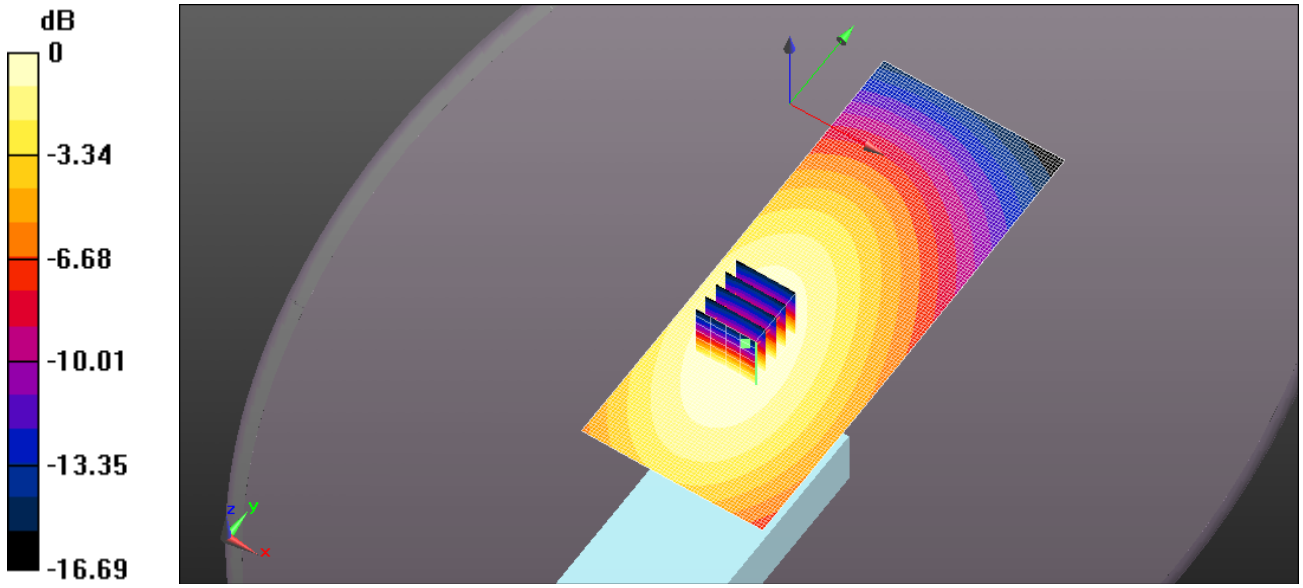

0 dB = 7.11 W/kg = 8.52 dBW/kg

Test Laboratory: Ultratech Group of Labs

FILE NAME: ICOM-442Q BP-284 FA-S76UC 125MM 460MHZ.DA52:0

DUT: IC-F4400DT; Type: UHF Transceiver; Serial: 31000402

Communication System: UID 0, CW (0); Frequency: 460 MHz; Duty Cycle: 1:1
Medium parameters used: f = 460 MHz; σ = 0.854 S/m; ε_r = 44.205; ρ = 1000 kg/m^3 ; Phantom section: Flat Section ; Measurement Standard: DASY5 (IEEE/IEC/ANSI C63.19-2007)

DASY Configuration:

- Probe: ES3DV3 - SN3250; ConvF(7.07, 7.07, 7.07); Calibrated: 3/22/2016;
- Sensor-Surface: 3mm (Mechanical Surface Detection)
- Electronics: DAE4 Sn874; Calibrated: 8/22/2016
- Phantom: ELI 4.0; Type: QD OVA 001 BB; Serial: 1057
- DASY52 52.8.8(1222); SEMCAD X 14.6.10(7331)

Configuration_Head_IC-F4400DT/Head Front, P=5W, d=25mm/Area Scan (61x151x1):

Interpolated grid: dx=1.500 mm, dy=1.500 mm
Maximum value of SAR (interpolated) = 7.51 W/kg

Configuration_Head_IC-F4400DT/Head Front, P=5W, d=25mm/Zoom Scan (5x5x7) (5x5x7)/Cube 0:

Measurement grid: dx=7.5mm, dy=7.5mm, dz=5mm
Reference Value = 90.03 V/m; Power Drift = -0.20 dB
Peak SAR (extrapolated) = 8.45 W/kg
SAR(1 g) = 6.29 W/kg; SAR(10 g) = 4.66 W/kg (SAR corrected for target medium)
Maximum value of SAR (measured) = 7.01 W/kg

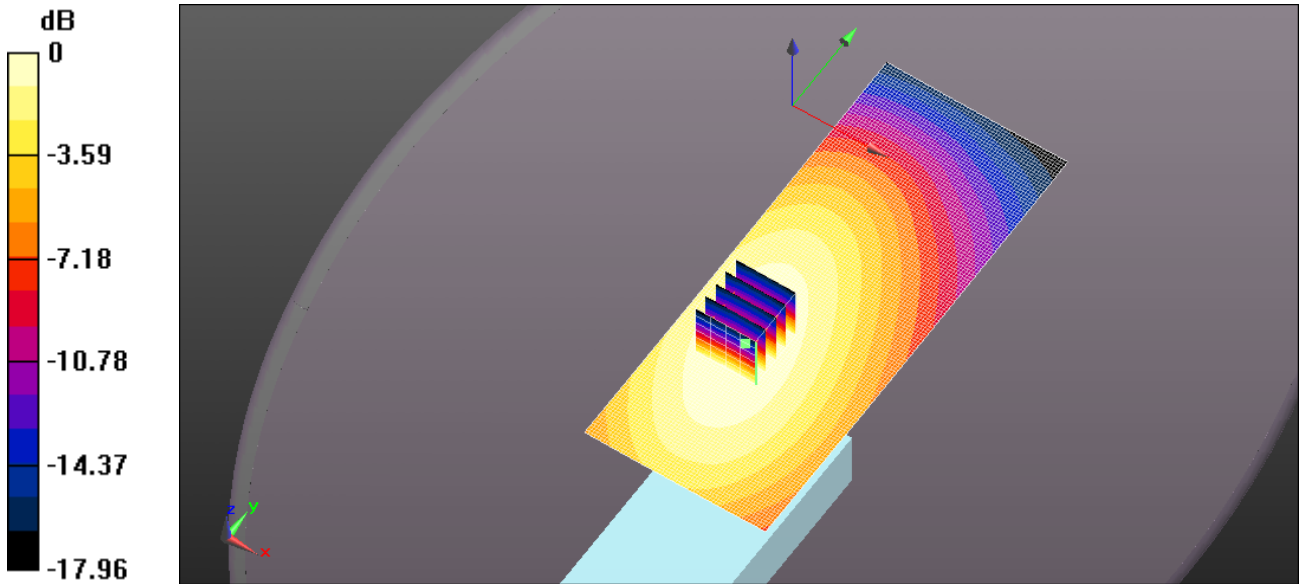

0 dB = 7.51 W/kg = 8.76 dBW/kg

Test Laboratory: Ultratech Group of Labs

FILE NAME: ICOM-442Q BP-284 FA-S76UC 125MM 480MHZ.DA52:0

DUT: IC-F4400DT; Type: UHF Transceiver; Serial: 31000402

Communication System: UID 0, CW (0); Frequency: 480 MHz; Duty Cycle: 1:1
Medium parameters used: f = 480 MHz; σ = 0.874 S/m; ε_r = 43.695; ρ = 1000 kg/m^3 ; Phantom section: Flat Section ; Measurement Standard: DASY5 (IEEE/IEC/ANSI C63.19-2007)

DASY Configuration:

- Probe: ES3DV3 - SN3250; ConvF(7.07, 7.07, 7.07); Calibrated: 3/22/2016;
- Sensor-Surface: 3mm (Mechanical Surface Detection)
- Electronics: DAE4 Sn874; Calibrated: 8/22/2016
- Phantom: ELI 4.0; Type: QD OVA 001 BB; Serial: 1057
- DASY52 52.8.8(1222); SEMCAD X 14.6.10(7331)

Configuration_Head_IC-F4400DT/Head Front, P=5W, d=25mm/Area Scan (61x151x1):

Interpolated grid: dx=1.500 mm, dy=1.500 mm
Maximum value of SAR (interpolated) = 4.91 W/kg

Configuration_Head_IC-F4400DT/Head Front, P=5W, d=25mm/Zoom Scan (5x5x7) (5x5x7)/Cube 0:

Measurement grid: dx=7.5mm, dy=7.5mm, dz=5mm
Reference Value = 74.80 V/m; Power Drift = -0.22 dB
Peak SAR (extrapolated) = 5.60 W/kg
SAR(1 g) = 4.18 W/kg; SAR(10 g) = 3.11 W/kg (SAR corrected for target medium)
Maximum value of SAR (measured) = 4.65 W/kg

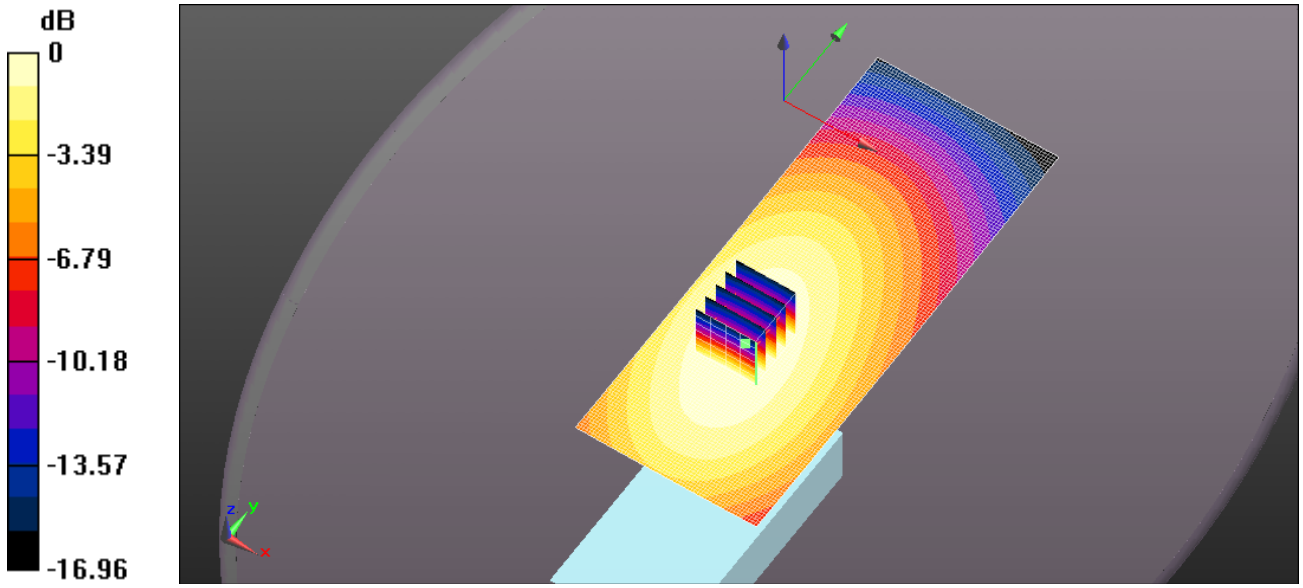

0 dB = 4.91 W/kg = 6.91 dBW/kg

Test Laboratory: Ultratech Group of Labs

FILE NAME: ICOM-442Q BP-284 FA-S76UC 125MM 500MHZ.DA52:0

DUT: IC-F4400DT; Type: UHF Transceiver; Serial: 31000402

Communication System: UID 0, CW (0); Frequency: 500 MHz; Duty Cycle: 1:1
Medium parameters used: f = 500 MHz; σ = 0.892 S/m; ε_r = 43.217; ρ = 1000 kg/m^3 ; Phantom section: Flat Section ; Measurement Standard: DASY5 (IEEE/IEC/ANSI C63.19-2007)

DASY Configuration:

- Probe: ES3DV3 - SN3250; ConvF(7.07, 7.07, 7.07); Calibrated: 3/22/2016;
- Sensor-Surface: 3mm (Mechanical Surface Detection)
- Electronics: DAE4 Sn874; Calibrated: 8/22/2016
- Phantom: ELI 4.0; Type: QD OVA 001 BB; Serial: 1057
- DASY52 52.8.8(1222); SEMCAD X 14.6.10(7331)

Configuration_Head_IC-F4400DT/Head Front, P=5W, d=25mm/Area Scan (61x151x1):

Interpolated grid: dx=1.500 mm, dy=1.500 mm
Maximum value of SAR (interpolated) = 7.58 W/kg

Configuration_Head_IC-F4400DT/Head Front, P=5W, d=25mm/Zoom Scan (5x5x7) (5x5x7)/Cube 0:

Measurement grid: dx=7.5mm, dy=7.5mm, dz=5mm
Reference Value = 85.46 V/m; Power Drift = -0.23 dB
Peak SAR (extrapolated) = 9.30 W/kg
SAR(1 g) = 6.66 W/kg; SAR(10 g) = 4.9 W/kg (SAR corrected for target medium)
Maximum value of SAR (measured) = 7.47 W/kg

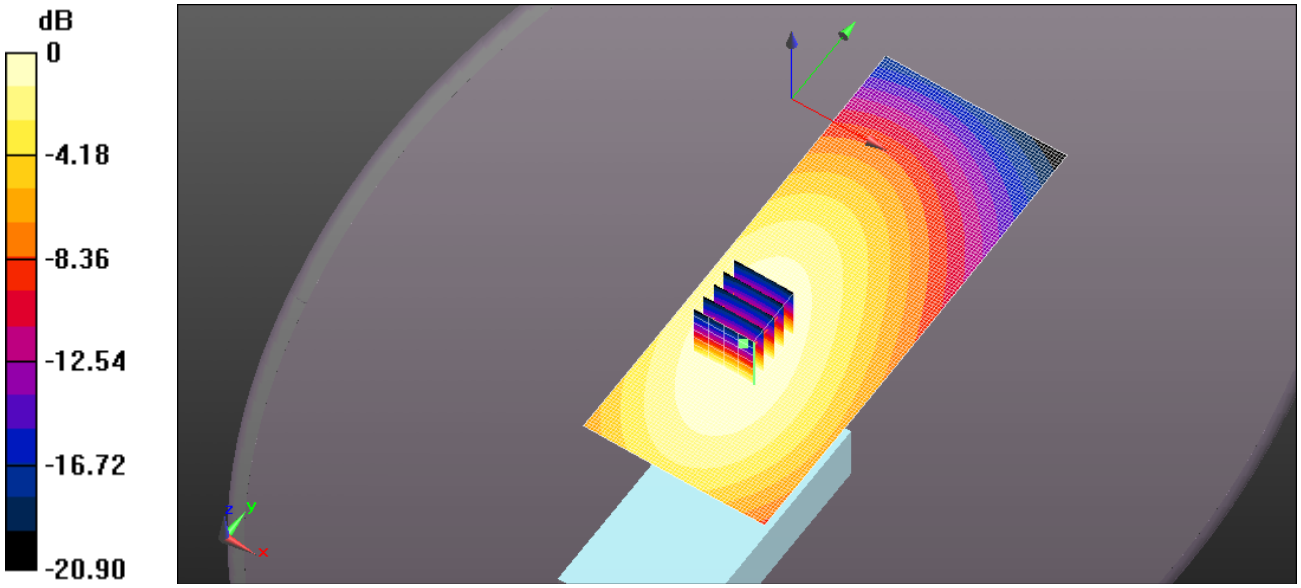

0 dB = 7.58 W/kg = 8.80 dBW/kg

Test Laboratory: Ultratech Group of Labs

File Name: ICOM-442Q BP-284 FA-S76UC 125mm 512MHz.da52:0

DUT: IC-F4400DT; Type: UHF Transceiver; Serial: 31000402

Communication System: UID 0, CW (0); Frequency: 512 MHz; Duty Cycle: 1:1
Medium parameters used (interpolated): f = 512 MHz; σ = 0.901 S/m; ε_r = 42.991; ρ = 1000 kg/m^3 ;
Phantom section: Flat Section ; Measurement Standard: DASY5 (IEEE/IEC/ANSI C63.19-2007)

DASY Configuration:

- Probe: ES3DV3 - SN3250; ConvF(7.07, 7.07, 7.07); Calibrated: 3/22/2016;
- Sensor-Surface: 3mm (Mechanical Surface Detection)
- Electronics: DAE4 Sn874; Calibrated: 8/22/2016
- Phantom: ELI 4.0; Type: QD OVA 001 BB; Serial: 1057
- DASY52 52.8.8(1222); SEMCAD X 14.6.10(7331)

Configuration_Head_IC-F4400DT/Head Front, P=5W, d=25mm/Area Scan (61x151x1):

Interpolated grid: dx=1.500 mm, dy=1.500 mm
Maximum value of SAR (interpolated) = 9.04 W/kg

Configuration_Head_IC-F4400DT/Head Front, P=5W, d=25mm/Zoom Scan (5x5x7) (5x5x7)/Cube 0:

Measurement grid: dx=7.5mm, dy=7.5mm, dz=5mm
Reference Value = 89.26 V/m; Power Drift = -0.12 dB
Peak SAR (extrapolated) = 11.2 W/kg
SAR(1 g) = 7.99 W/kg; SAR(10 g) = 5.83 W/kg (SAR corrected for target medium)
Maximum value of SAR (measured) = 8.98 W/kg

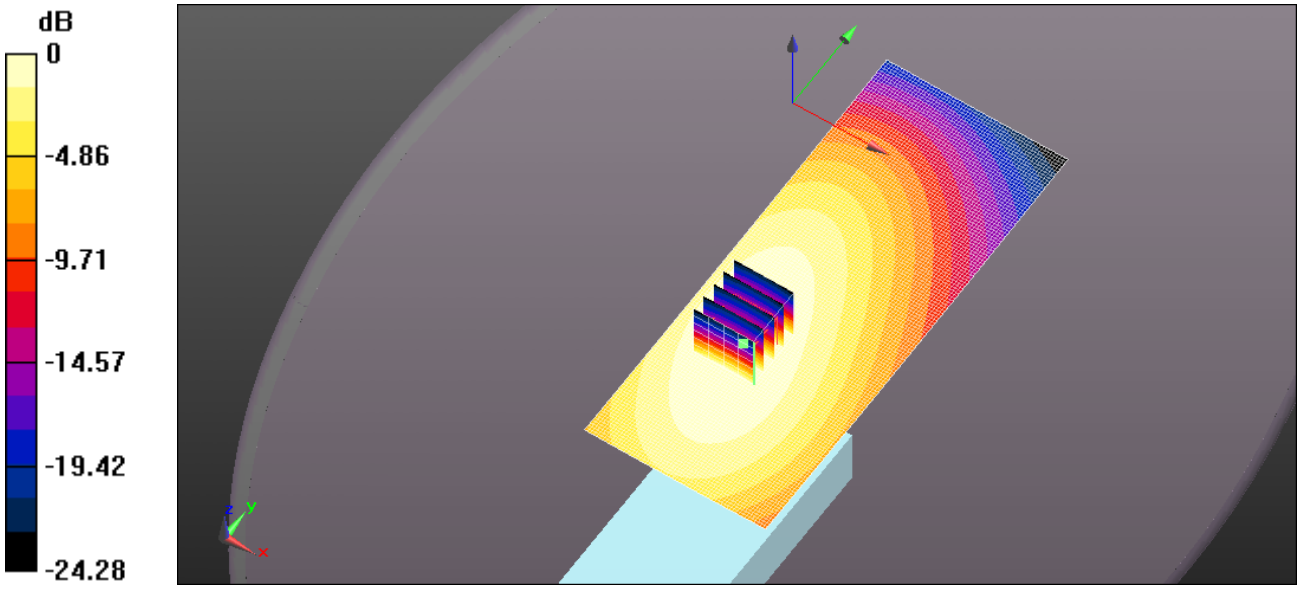

0 dB = 9.04 W/kg = 9.56 dBW/kg

EXHIBIT 2. BODY SAR MEASUREMENT SUMMARY

Antenna	Power (W)	CH	CH. Freq	BODY SAR1g (W/Kg)	BODY SAR10g (W/Kg)
				BP-283	BP-283
			(MHz)	2010mAh	2010mAh
FA-S82U 430-480 MHz	5.24	1	450	6.35	4.63
	5.15	3	470	5.46	4.03
	5.16	4	480	4.14	3.04
FA-S82US 450-490 MHz	5.24	1	450	7.87	5.70
	5.15	3	470	6.07	4.45
	5.17	5	490	3.05	2.24
FA-S83U 470-520 MHz	5.15	3	470	9.19	6.76
	5.17	5	490	9.43	6.94
	5.10	10	512	7.55	5.55
Cut Antenna	**Power (dBm)**	**CH**	**CH. Freq**	**BODY 1g (W/Kg)**	**BODY SAR10g (W/Kg)**
				BP-283	BP-283
			(MHz)	2010mAh	2010mAh
FA-S76UC 360-520 MHz 142mm 460MHz	5.24	1	450	7.48	5.44
	5.21	2	460	7.02	5.16
	5.16	4	480	6.18	4.52
	5.11	7	500	5.37	3.92
	5.10	10	512	5.11	3.75
FA-S76UC 360-520 MHz 136mm 480MHz	5.24	1	450	9.47	6.70
	5.21	2	460	8.49	6.24
	5.16	4	480	7.99	5.85
	5.11	7	500	7.90	5.79
	5.10	10	512	7.24	5.31
FA-S76UC 360-520 MHz 129mm 500MHz	5.24	1	450	9.34	6.79
	5.21	2	460	8.50	6.25
	5.16	4	480	8.32	6.09
	5.11	7	500	9.23	6.75
	5.10	10	512	8.80	6.44
FA-S76UC 360-520 MHz 125mm 520MHz	5.24	1	450	8.65	6.31
	5.21	2	460	7.81	5.76
	5.16	4	480	8.13	5.97
	5.11	7	500	9.92	7.27
	5.10	10	512	10.40	7.61

Test Laboratory: Ultratech Group of Labs

FILE NAME: ICOM-442Q BP-283 FA-S82U 450MHZ.DA52:0

DUT: IC-F4400DT; Type: UHF Transceiver; Serial: 31000402

Communication System: UID 0, CW (0); Frequency: 450 MHz; Duty Cycle: 1:1
Medium parameters used: f = 450 MHz; σ = 0.91 S/m; ε_r = 56.998; ρ = 1000 kg/m^3 ; Phantom section: Flat Section ; Measurement Standard: DASY5 (IEEE/IEC/ANSI C63.19-2007)

DASY Configuration:

- Probe: ES3DV3 - SN3250; ConvF(6.93, 6.93, 6.93); Calibrated: 3/22/2016;
- Sensor-Surface: 3mm (Mechanical Surface Detection)
- Electronics: DAE4 Sn874; Calibrated: 8/22/2016
- Phantom: ELI 4.0; Type: QD OVA 001 BB; Serial: 1057
- DASY52 52.8.8(1222); SEMCAD X 14.6.10(7331)

Configuration_Body_IC-F4400DT/Body Back, P=5W, d=0mm/Area Scan (61x151x1):

Interpolated grid: dx=1.500 mm, dy=1.500 mm
Maximum value of SAR (interpolated) = 6.97 W/kg

Configuration_Body_IC-F4400DT/Body Back, P=5W, d=0mm/Zoom Scan (5x5x7) (5x5x7)/Cube 0:

Measurement grid: dx=7.5mm, dy=7.5mm, dz=5mm
Reference Value = 92.35 V/m; Power Drift = -0.16 dB
Peak SAR (extrapolated) = 8.59 W/kg
SAR(1 g) = 6.35 W/kg; SAR(10 g) = 4.63 W/kg (SAR corrected for target medium)
Maximum value of SAR (measured) = 6.89 W/kg

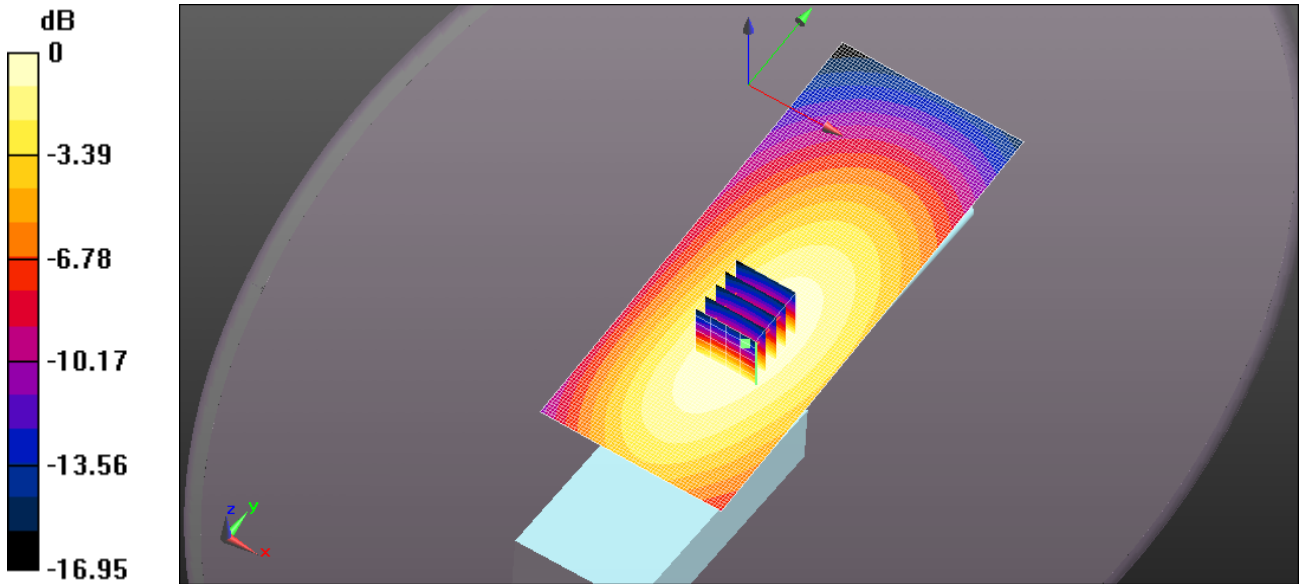

0 dB = 6.97 W/kg = 8.43 dBW/kg

Test Laboratory: Ultratech Group of Labs

FILE NAME: ICOM-442Q BP-283 FA-S82U 460MHZ.DA52:0

DUT: IC-F4400DT; Type: UHF Transceiver; Serial: 31000402

Communication System: UID 0, CW (0); Frequency: 460 MHz; Duty Cycle: 1:1
Medium parameters used: f = 460 MHz; σ = 0.92 S/m; ε_r = 56.886; ρ = 1000 kg/m^3 ; Phantom section: Flat Section ; Measurement Standard: DASY5 (IEEE/IEC/ANSI C63.19-2007)

DASY Configuration:

- Probe: ES3DV3 - SN3250; ConvF(6.93, 6.93, 6.93); Calibrated: 3/22/2016;
- Sensor-Surface: 3mm (Mechanical Surface Detection)
- Electronics: DAE4 Sn874; Calibrated: 8/22/2016
- Phantom: ELI 4.0; Type: QD OVA 001 BB; Serial: 1057
- DASY52 52.8.8(1222); SEMCAD X 14.6.10(7331)

Configuration_Body_IC-F4400DT/Body Back, P=5W, d=0mm/Area Scan (61x151x1):

Interpolated grid: dx=1.500 mm, dy=1.500 mm
Maximum value of SAR (interpolated) = 6.12 W/kg

Configuration_Body_IC-F4400DT/Body Back, P=5W, d=0mm/Zoom Scan (5x5x7) (5x5x7)/Cube 0:

Measurement grid: dx=7.5mm, dy=7.5mm, dz=5mm
Reference Value = 86.31 V/m; Power Drift = -0.23 dB
Peak SAR (extrapolated) = 7.62 W/kg
SAR(1 g) = 5.46 W/kg; SAR(10 g) = 4.02 W/kg (SAR corrected for target medium)
Maximum value of SAR (measured) = 6.11 W/kg

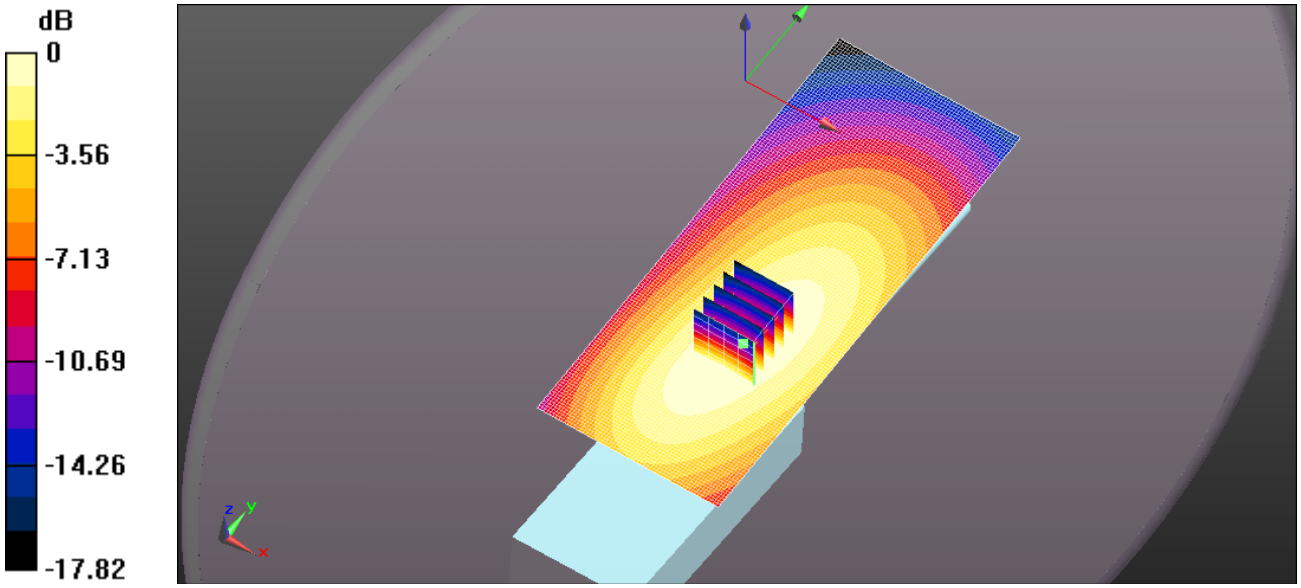

0 dB = 6.12 W/kg = 7.87 dBW/kg

Test Laboratory: Ultratech Group of Labs

FILE NAME: ICOM-442Q BP-283 FA-S82U 480MHZ.DA52:0

DUT: IC-F4400DT; Type: UHF Transceiver; Serial: 31000402

Communication System: UID 0, CW (0); Frequency: 480 MHz; Duty Cycle: 1:1
Medium parameters used: f = 480 MHz; σ = 0.937 S/m; ε_r = 56.627; ρ = 1000 kg/m^3 ; Phantom section: Flat Section ; Measurement Standard: DASY5 (IEEE/IEC/ANSI C63.19-2007)

DASY Configuration:

- Probe: ES3DV3 - SN3250; ConvF(6.93, 6.93, 6.93); Calibrated: 3/22/2016;
- Sensor-Surface: 3mm (Mechanical Surface Detection)
- Electronics: DAE4 Sn874; Calibrated: 8/22/2016
- Phantom: ELI 4.0; Type: QD OVA 001 BB; Serial: 1057
- DASY52 52.8.8(1222); SEMCAD X 14.6.10(7331)

Configuration_Body_IC-F4400DT/Body Back, P=5W, d=0mm/Area Scan (61x151x1):

Interpolated grid: dx=1.500 mm, dy=1.500 mm
Maximum value of SAR (interpolated) = 4.67 W/kg

Configuration_Body_IC-F4400DT/Body Back, P=5W, d=0mm/Zoom Scan (5x5x7) (5x5x7)/Cube 0:

Measurement grid: dx=7.5mm, dy=7.5mm, dz=5mm
Reference Value = 73.22 V/m; Power Drift = -0.23 dB
Peak SAR (extrapolated) = 5.79 W/kg
SAR(1 g) = 4.14 W/kg; SAR(10 g) = 3.04 W/kg (SAR corrected for target medium)
Maximum value of SAR (measured) = 4.65 W/kg

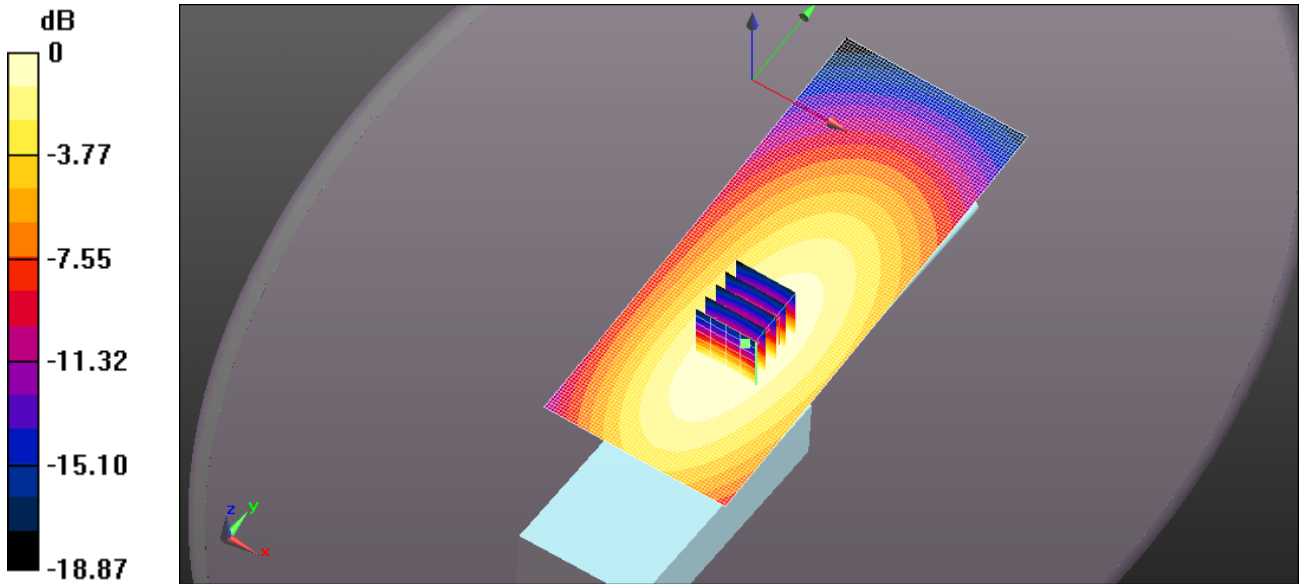

0 dB = 4.67 W/kg = 6.69 dBW/kg

Test Laboratory: Ultratech Group of Labs

FILE NAME: ICOM-442Q BP-283 FA-S82US 450MHZ.DA52:0

DUT: IC-F4400DT; Type: UHF Transceiver; Serial: 31000402

Communication System: UID 0, CW (0); Frequency: 450 MHz; Duty Cycle: 1:1
Medium parameters used: f = 450 MHz; σ = 0.91 S/m; ε_r = 56.998; ρ = 1000 kg/m^3 ; Phantom section: Flat Section ; Measurement Standard: DASY5 (IEEE/IEC/ANSI C63.19-2007)

DASY Configuration:

- Probe: ES3DV3 - SN3250; ConvF(6.93, 6.93, 6.93); Calibrated: 3/22/2016;
- Sensor-Surface: 3mm (Mechanical Surface Detection)
- Electronics: DAE4 Sn874; Calibrated: 8/22/2016
- Phantom: ELI 4.0; Type: QD OVA 001 BB; Serial: 1057
- DASY52 52.8.8(1222); SEMCAD X 14.6.10(7331)

Configuration_Body_IC-F4400DT/Body Back, P=5W, d=0mm/Area Scan (61x151x1):

Interpolated grid: dx=1.500 mm, dy=1.500 mm
Maximum value of SAR (interpolated) = 9.08 W/kg

Configuration_Body_IC-F4400DT/Body Back, P=5W, d=0mm/Zoom Scan (5x5x7) (5x5x7)/Cube 0:

Measurement grid: dx=7.5mm, dy=7.5mm, dz=5mm
Reference Value = 99.99 V/m; Power Drift = -0.16 dB
Peak SAR (extrapolated) = 10.7 W/kg
SAR(1 g) = 7.87 W/kg; SAR(10 g) = 5.7 W/kg (SAR corrected for target medium)
Maximum value of SAR (measured) = 8.58 W/kg

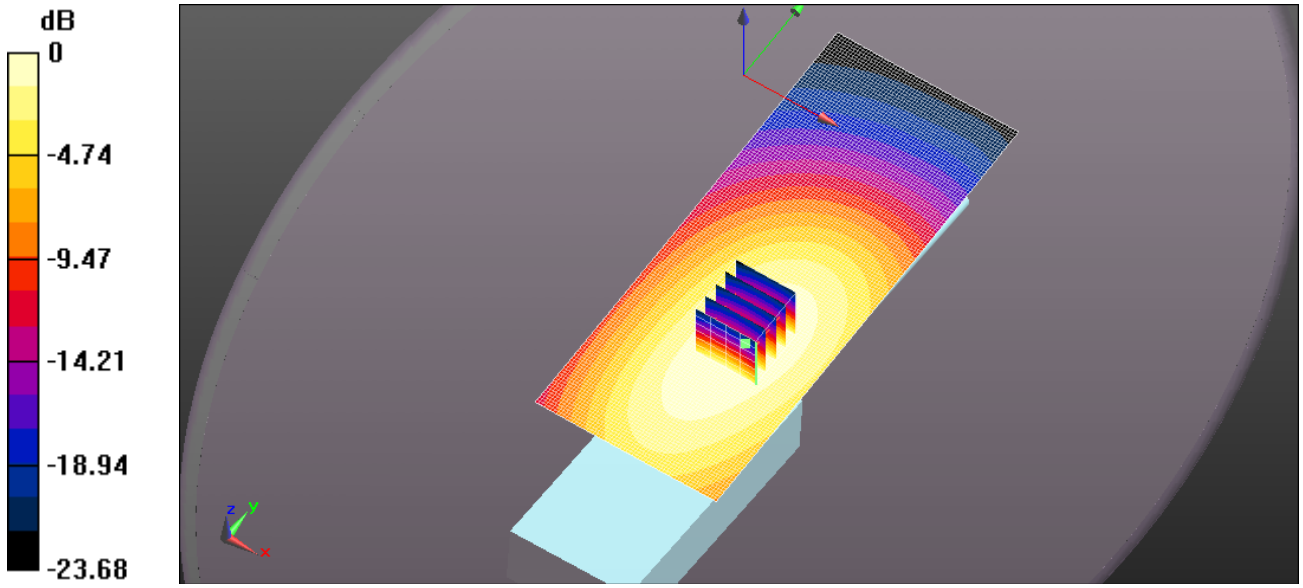

0 dB = 9.08 W/kg = 9.58 dBW/kg

Test Laboratory: Ultratech Group of Labs

File Name: ICOM-442Q BP-283 FA-S82US 470MHz.da52:0

DUT: IC-F4400DT; Type: UHF Transceiver; Serial: 31000402

Communication System: UID 0, CW (0); Frequency: 470 MHz; Duty Cycle: 1:1
Medium parameters used: f = 470 MHz; σ = 0.928 S/m; ε_r = 56.735; ρ = 1000 kg/m^3 ; Phantom section: Flat Section ; Measurement Standard: DASY5 (IEEE/IEC/ANSI C63.19-2007)

DASY Configuration:

- Probe: ES3DV3 - SN3250; ConvF(6.93, 6.93, 6.93); Calibrated: 3/22/2016;
- Sensor-Surface: 3mm (Mechanical Surface Detection)
- Electronics: DAE4 Sn874; Calibrated: 8/22/2016
- Phantom: ELI 4.0; Type: QD OVA 001 BB; Serial: 1057
- DASY52 52.8.8(1222); SEMCAD X 14.6.10(7331)

Configuration_Body_IC-F4400DT/Body Back, P=5W, d=0mm/Area Scan (61x151x1):

Interpolated grid: dx=1.500 mm, dy=1.500 mm
Maximum value of SAR (interpolated) = 6.80 W/kg

Configuration_Body_IC-F4400DT/Body Back, P=5W, d=0mm/Zoom Scan (5x5x7) (5x5x7)/Cube 0:

Measurement grid: dx=7.5mm, dy=7.5mm, dz=5mm
Reference Value = 88.45 V/m; Power Drift = -0.21 dB
Peak SAR (extrapolated) = 8.48 W/kg
SAR(1 g) = 6.07 W/kg; SAR(10 g) = 4.45 W/kg (SAR corrected for target medium)
Maximum value of SAR (measured) = 6.80 W/kg

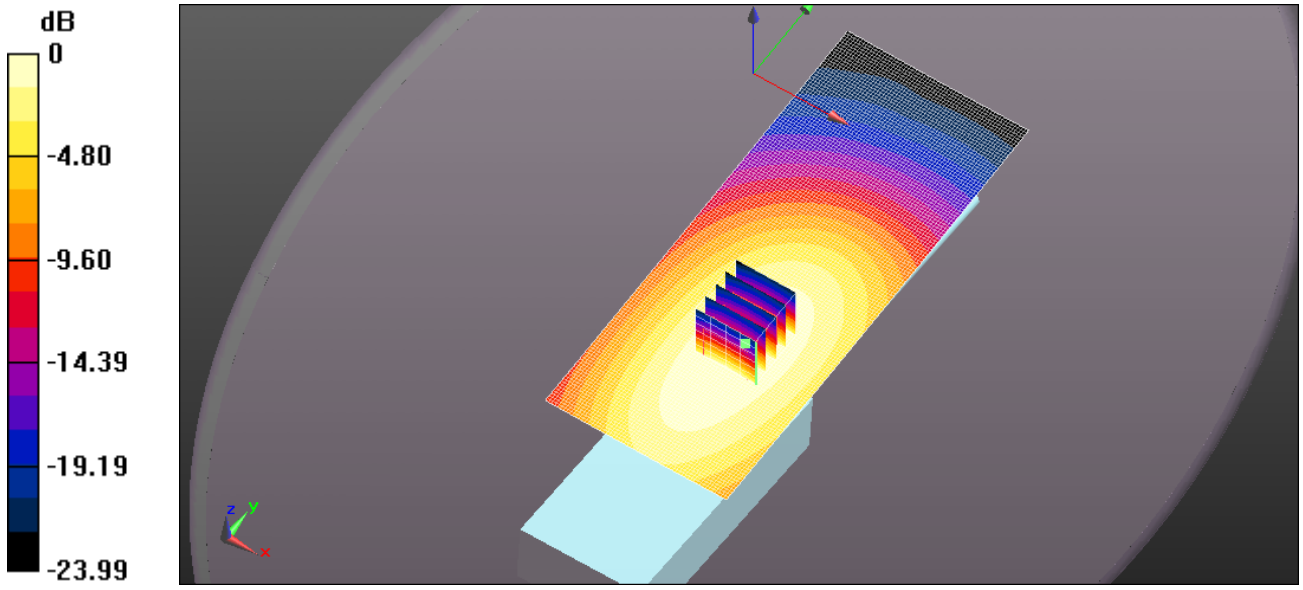

0 dB = 6.80 W/kg = 8.33 dBW/kg

Test Laboratory: Ultratech Group of Labs

FILE NAME: ICOM-442Q BP-283 FA-S82US 490MHZ.DA52:0

DUT: IC-F4400DT; Type: UHF Transceiver; Serial: 31000402

Communication System: UID 0, CW (0); Frequency: 490 MHz; Duty Cycle: 1:1
Medium parameters used: f = 490 MHz; σ = 0.944 S/m; ε_r = 56.473; ρ = 1000 kg/m^3 ; Phantom section: Flat Section ; Measurement Standard: DASY5 (IEEE/IEC/ANSI C63.19-2007)

DASY Configuration:

- Probe: ES3DV3 - SN3250; ConvF(6.93, 6.93, 6.93); Calibrated: 3/22/2016;
- Sensor-Surface: 3mm (Mechanical Surface Detection)
- Electronics: DAE4 Sn874; Calibrated: 8/22/2016
- Phantom: ELI 4.0; Type: QD OVA 001 BB; Serial: 1057
- DASY52 52.8.8(1222); SEMCAD X 14.6.10(7331)

Configuration_Body_IC-F4400DT/Body Back, P=5W, d=0mm/Area Scan (61x151x1):

Interpolated grid: dx=1.500 mm, dy=1.500 mm
Maximum value of SAR (interpolated) = 3.41 W/kg

Configuration_Body_IC-F4400DT/Body Back, P=5W, d=0mm/Zoom Scan (5x5x7) (5x5x7)/Cube 0:

Measurement grid: dx=7.5mm, dy=7.5mm, dz=5mm
Reference Value = 60.51 V/m; Power Drift = -0.17 dB
Peak SAR (extrapolated) = 4.24 W/kg
SAR(1 g) = 3.04 W/kg; SAR(10 g) = 2.24 W/kg (SAR corrected for target medium)
Maximum value of SAR (measured) = 3.42 W/kg

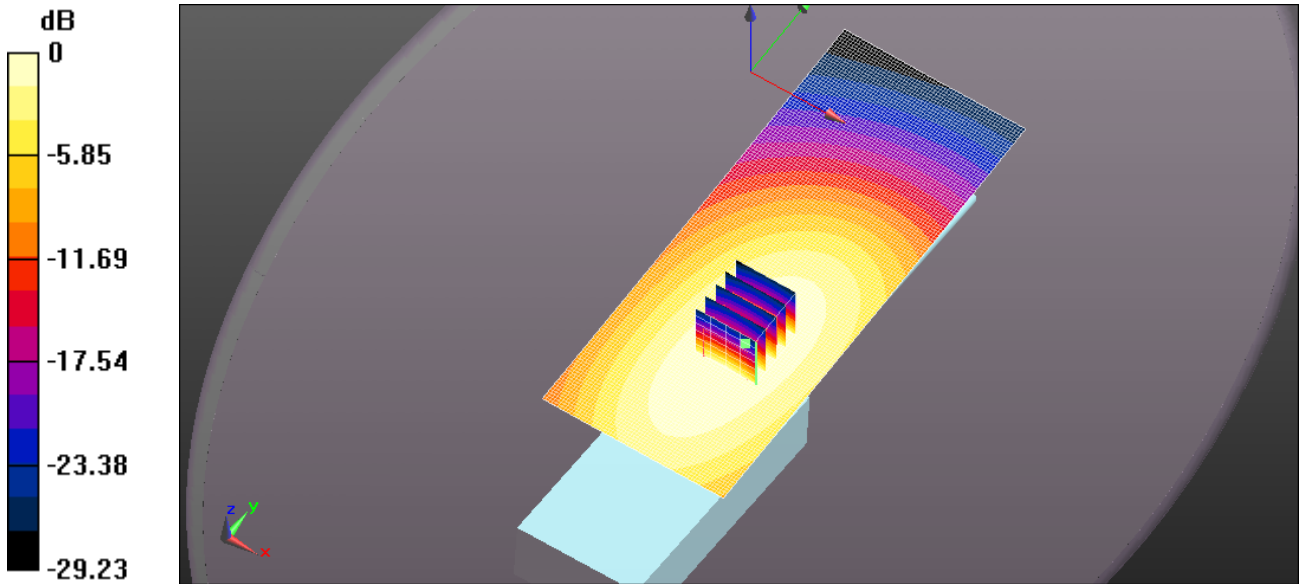

0 dB = 3.41 W/kg = 5.32 dBW/kg

Test Laboratory: Ultratech Group of Labs

FILE NAME: ICOM-442Q BP-283 FA-S83U 470MHZ.DA52:0

DUT: IC-F4400DT; Type: UHF Transceiver; Serial: 31000402

Communication System: UID 0, CW (0); Frequency: 470 MHz; Duty Cycle: 1:1
Medium parameters used: f = 470 MHz; σ = 0.928 S/m; ε_r = 56.735; ρ = 1000 kg/m^3 ; Phantom section: Flat Section ; Measurement Standard: DASY5 (IEEE/IEC/ANSI C63.19-2007)

DASY Configuration:

- Probe: ES3DV3 - SN3250; ConvF(6.93, 6.93, 6.93); Calibrated: 3/22/2016;
- Sensor-Surface: 3mm (Mechanical Surface Detection)
- Electronics: DAE4 Sn874; Calibrated: 8/22/2016
- Phantom: ELI 4.0; Type: QD OVA 001 BB; Serial: 1057
- DASY52 52.8.8(1222); SEMCAD X 14.6.10(7331)

Configuration_Body_IC-F4400DT/Body Back, P=5W, d=0mm/Area Scan (61x151x1):

Interpolated grid: dx=1.500 mm, dy=1.500 mm
Maximum value of SAR (interpolated) = 10.5 W/kg

Configuration_Body_IC-F4400DT/Body Back, P=5W, d=0mm/Zoom Scan (5x5x7) (5x5x7)/Cube 0:

Measurement grid: dx=7.5mm, dy=7.5mm, dz=5mm
Reference Value = 107.5 V/m; Power Drift = -0.22 dB
Peak SAR (extrapolated) = 12.8 W/kg
SAR(1 g) = 9.19 W/kg; SAR(10 g) = 6.76 W/kg (SAR corrected for target medium)
Maximum value of SAR (measured) = 10.3 W/kg

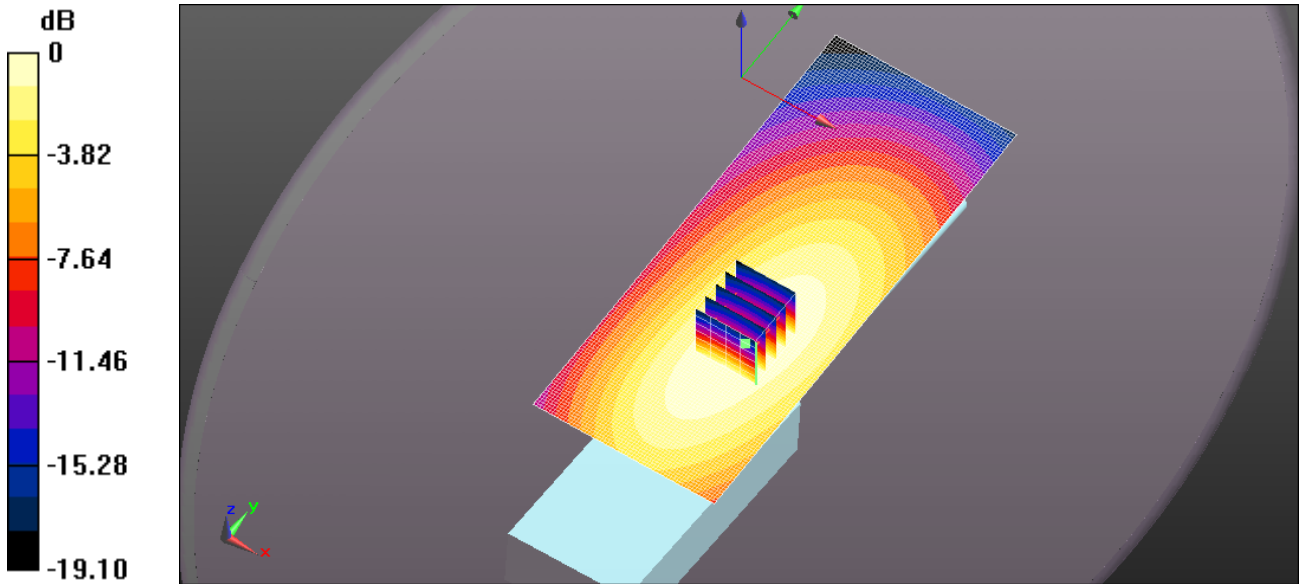

0 dB = 10.5 W/kg = 10.20 dBW/kg

Test Laboratory: Ultratech Group of Labs

File Name: ICOM-442Q BP-283 FA-S83U 490MHz.da52:0

DUT: IC-F4400DT; Type: UHF Transceiver; Serial: 31000402

Communication System: UID 0, CW (0); Frequency: 490 MHz; Duty Cycle: 1:1
Medium parameters used: f = 490 MHz; σ = 0.944 S/m; ε_r = 56.473; ρ = 1000 kg/m^3 ; Phantom section: Flat Section ; Measurement Standard: DASY5 (IEEE/IEC/ANSI C63.19-2007)

DASY Configuration:

- Probe: ES3DV3 - SN3250; ConvF(6.93, 6.93, 6.93); Calibrated: 3/22/2016;
- Sensor-Surface: 3mm (Mechanical Surface Detection)
- Electronics: DAE4 Sn874; Calibrated: 8/22/2016
- Phantom: ELI 4.0; Type: QD OVA 001 BB; Serial: 1057
- DASY52 52.8.8(1222); SEMCAD X 14.6.10(7331)

Configuration_Body_IC-F4400DT/Body Back, P=5W, d=0mm/Area Scan (61x151x1):

Interpolated grid: dx=1.500 mm, dy=1.500 mm
Maximum value of SAR (interpolated) = 10.6 W/kg

Configuration_Body_IC-F4400DT/Body Back, P=5W, d=0mm/Zoom Scan (5x5x7) (5x5x7)/Cube 0:

Measurement grid: dx=7.5mm, dy=7.5mm, dz=5mm
Reference Value = 106.6 V/m; Power Drift = -0.13 dB
Peak SAR (extrapolated) = 13.1 W/kg
SAR(1 g) = 9.43 W/kg; SAR(10 g) = 6.94 W/kg (SAR corrected for target medium)
Maximum value of SAR (measured) = 10.6 W/kg

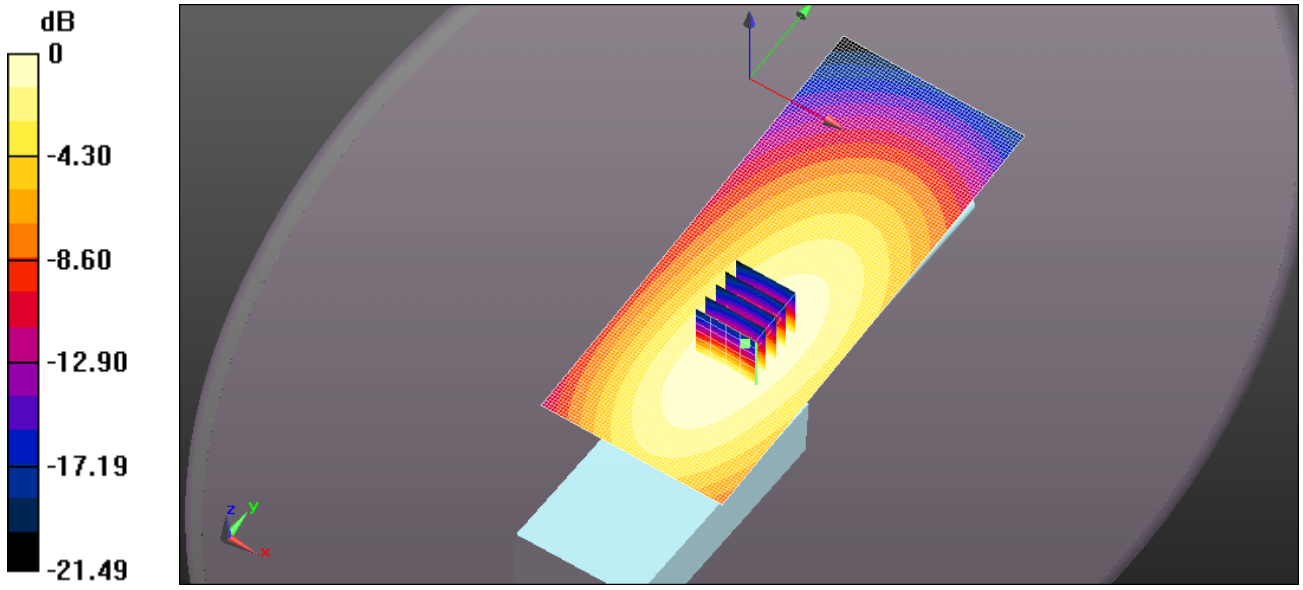

0 dB = 10.6 W/kg = 10.26 dBW/kg

Test Laboratory: Ultratech Group of Labs

File Name: ICOM-442Q BP-283 FA-S83U 512MHz.da52:0

DUT: IC-F4400DT; Type: UHF Transceiver; Serial: 31000402

Communication System: UID 0, CW (0); Frequency: 512 MHz; Duty Cycle: 1:1
Medium parameters used (interpolated): f = 512 MHz; σ = 0.962 S/m; ε_r = 56.248; ρ = 1000 kg/m^3 ;
Phantom section: Flat Section ; Measurement Standard: DASY5 (IEEE/IEC/ANSI C63.19-2007)

DASY Configuration:

- Probe: ES3DV3 - SN3250; ConvF(6.93, 6.93, 6.93); Calibrated: 3/22/2016;
- Sensor-Surface: 3mm (Mechanical Surface Detection)
- Electronics: DAE4 Sn874; Calibrated: 8/22/2016
- Phantom: ELI 4.0; Type: QD OVA 001 BB; Serial: 1057
- DASY52 52.8.8(1222); SEMCAD X 14.6.10(7331)

Configuration_Body_IC-F4400DT/Body Back, P=5W, d=0mm/Area Scan (61x151x1):

Interpolated grid: dx=1.500 mm, dy=1.500 mm
Maximum value of SAR (interpolated) = 8.45 W/kg

Configuration_Body_IC-F4400DT/Body Back, P=5W, d=0mm/Zoom Scan (5x5x7) (5x5x7)/Cube 0:

Measurement grid: dx=7.5mm, dy=7.5mm, dz=5mm
Reference Value = 92.38 V/m; Power Drift = -0.09 dB
Peak SAR (extrapolated) = 10.7 W/kg
SAR(1 g) = 7.55 W/kg; SAR(10 g) = 5.55 W/kg (SAR corrected for target medium)
Maximum value of SAR (measured) = 8.49 W/kg

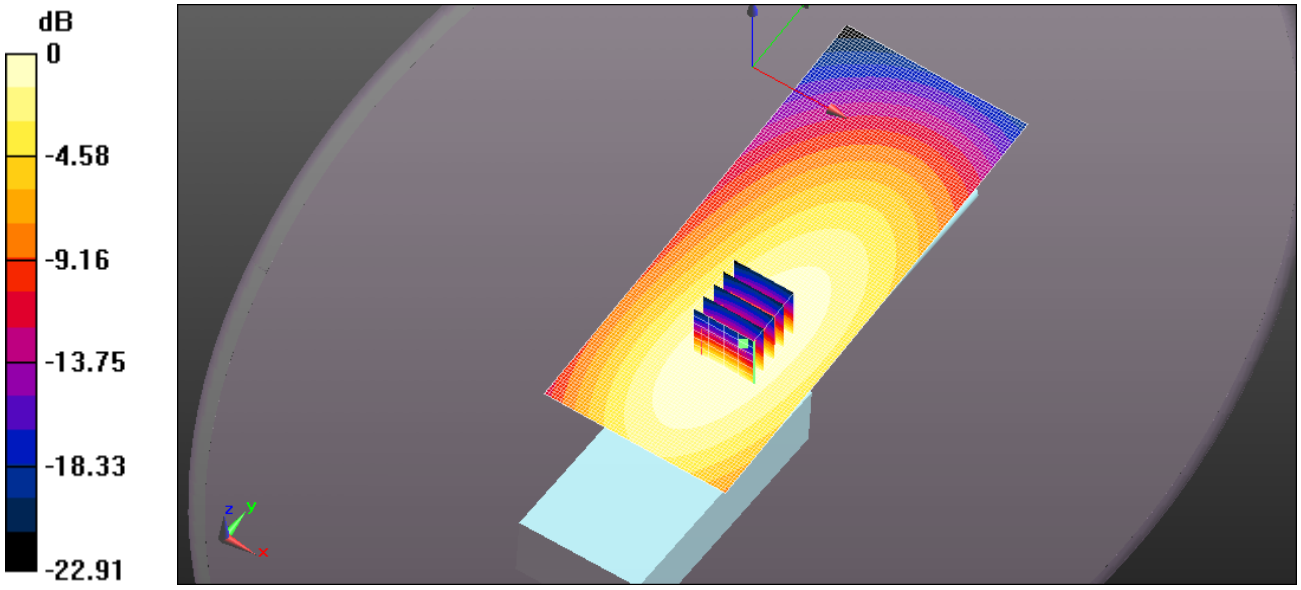

0 dB = 8.45 W/kg = 9.27 dBW/kg

Test Laboratory: Ultratech Group of Labs

FILE NAME: ICOM-442Q BP-283 FA-S76UC 142MM 450MHZ.DA52:0

DUT: IC-F4400DT; Type: UHF Transceiver; Serial: 31000402

Communication System: UID 0, CW (0); Frequency: 450 MHz; Duty Cycle: 1:1
Medium parameters used: f = 450 MHz; σ = 0.91 S/m; ε_r = 56.998; ρ = 1000 kg/m^3 ; Phantom section: Flat Section ; Measurement Standard: DASY5 (IEEE/IEC/ANSI C63.19-2007)

DASY Configuration:

- Probe: ES3DV3 - SN3250; ConvF(6.93, 6.93, 6.93); Calibrated: 3/22/2016;
- Sensor-Surface: 3mm (Mechanical Surface Detection)
- Electronics: DAE4 Sn874; Calibrated: 8/22/2016
- Phantom: ELI 4.0; Type: QD OVA 001 BB; Serial: 1057
- DASY52 52.8.8(1222); SEMCAD X 14.6.10(7331)

Configuration_Body_IC-F4400DT/Body Back, P=5W, d=0mm/Area Scan (61x151x1):

Interpolated grid: dx=1.500 mm, dy=1.500 mm
Maximum value of SAR (interpolated) = 8.22 W/kg

Configuration_Body_IC-F4400DT/Body Back, P=5W, d=0mm/Zoom Scan (5x5x7) (5x5x7)/Cube 0:

Measurement grid: dx=7.5mm, dy=7.5mm, dz=5mm
Reference Value = 95.60 V/m; Power Drift = -0.18 dB
Peak SAR (extrapolated) = 10.1 W/kg
SAR(1 g) = 7.48 W/kg; SAR(10 g) = 5.44 W/kg (SAR corrected for target medium)
Maximum value of SAR (measured) = 8.12 W/kg

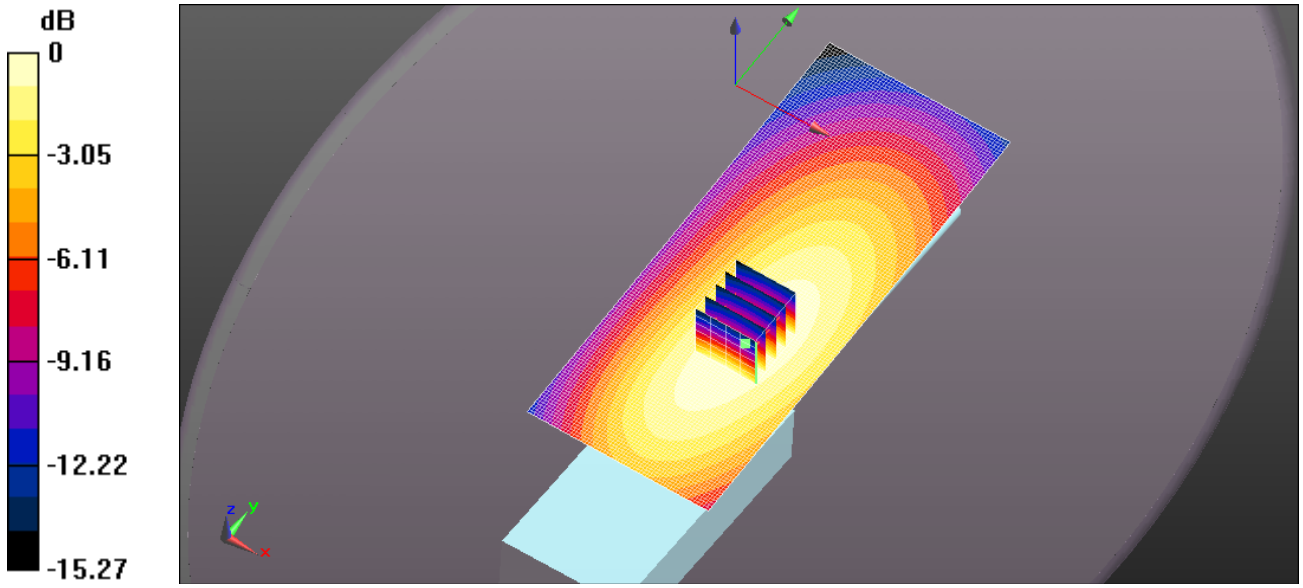

0 dB = 8.22 W/kg = 9.15 dBW/kg

Test Laboratory: Ultratech Group of Labs

FILE NAME: ICOM-442Q BP-283 FA-S76UC 142MM 460MHZ.DA52:0

DUT: IC-F4400DT; Type: UHF Transceiver; Serial: 31000402

Communication System: UID 0, CW (0); Frequency: 460 MHz; Duty Cycle: 1:1
Medium parameters used: f = 460 MHz; σ = 0.92 S/m; ε_r = 56.886; ρ = 1000 kg/m^3 ; Phantom section: Flat Section ; Measurement Standard: DASY5 (IEEE/IEC/ANSI C63.19-2007)

DASY Configuration:

- Probe: ES3DV3 - SN3250; ConvF(6.93, 6.93, 6.93); Calibrated: 3/22/2016;
- Sensor-Surface: 3mm (Mechanical Surface Detection)
- Electronics: DAE4 Sn874; Calibrated: 8/22/2016
- Phantom: ELI 4.0; Type: QD OVA 001 BB; Serial: 1057
- DASY52 52.8.8(1222); SEMCAD X 14.6.10(7331)

Configuration_Body_IC-F4400DT/Body Back, P=5W, d=0mm/Area Scan (61x151x1):

Interpolated grid: dx=1.500 mm, dy=1.500 mm
Maximum value of SAR (interpolated) = 7.93 W/kg

Configuration_Body_IC-F4400DT/Body Back, P=5W, d=0mm/Zoom Scan (5x5x7) (5x5x7)/Cube 0:

Measurement grid: dx=7.5mm, dy=7.5mm, dz=5mm
Reference Value = 93.77 V/m; Power Drift = -0.16 dB
Peak SAR (extrapolated) = 9.82 W/kg
SAR(1 g) = 7.02 W/kg; SAR(10 g) = 5.16 W/kg (SAR corrected for target medium)
Maximum value of SAR (measured) = 7.89 W/kg

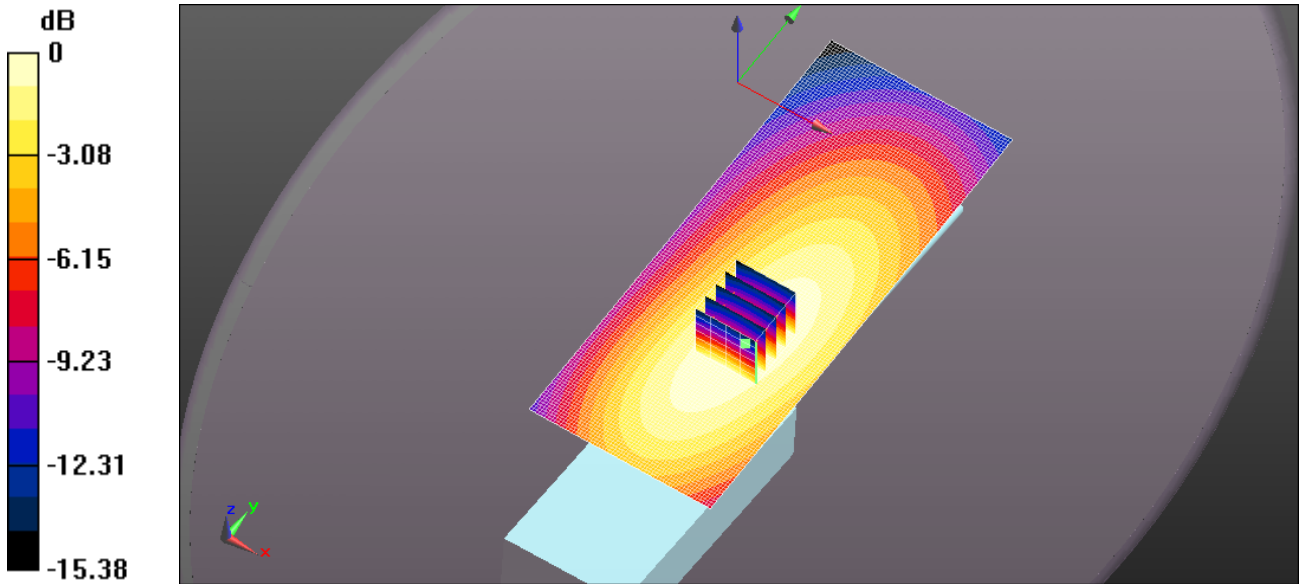

0 dB = 7.93 W/kg = 8.99 dBW/kg

Test Laboratory: Ultratech Group of Labs

FILE NAME: ICOM-442Q BP-283 FA-S76UC 142MM 480MHZ.DA52:0

DUT: IC-F4400DT; Type: UHF Transceiver; Serial: 31000402

Communication System: UID 0, CW (0); Frequency: 480 MHz; Duty Cycle: 1:1
Medium parameters used: f = 480 MHz; σ = 0.937 S/m; ε_r = 56.627; ρ = 1000 kg/m^3 ; Phantom section: Flat Section ; Measurement Standard: DASY5 (IEEE/IEC/ANSI C63.19-2007)

DASY Configuration:

- Probe: ES3DV3 - SN3250; ConvF(6.93, 6.93, 6.93); Calibrated: 3/22/2016;
- Sensor-Surface: 3mm (Mechanical Surface Detection)
- Electronics: DAE4 Sn874; Calibrated: 8/22/2016
- Phantom: ELI 4.0; Type: QD OVA 001 BB; Serial: 1057
- DASY52 52.8.8(1222); SEMCAD X 14.6.10(7331)

Configuration_Body_IC-F4400DT/Body Back, P=5W, d=0mm/Area Scan (61x151x1):

Interpolated grid: dx=1.500 mm, dy=1.500 mm
Maximum value of SAR (interpolated) = 6.95 W/kg

Configuration_Body_IC-F4400DT/Body Back, P=5W, d=0mm/Zoom Scan (5x5x7) (5x5x7)/Cube 0:

Measurement grid: dx=7.5mm, dy=7.5mm, dz=5mm
Reference Value = 86.82 V/m; Power Drift = -0.16 dB
Peak SAR (extrapolated) = 8.68 W/kg
SAR(1 g) = 6.18 W/kg; SAR(10 g) = 4.52 W/kg (SAR corrected for target medium)
Maximum value of SAR (measured) = 6.94 W/kg

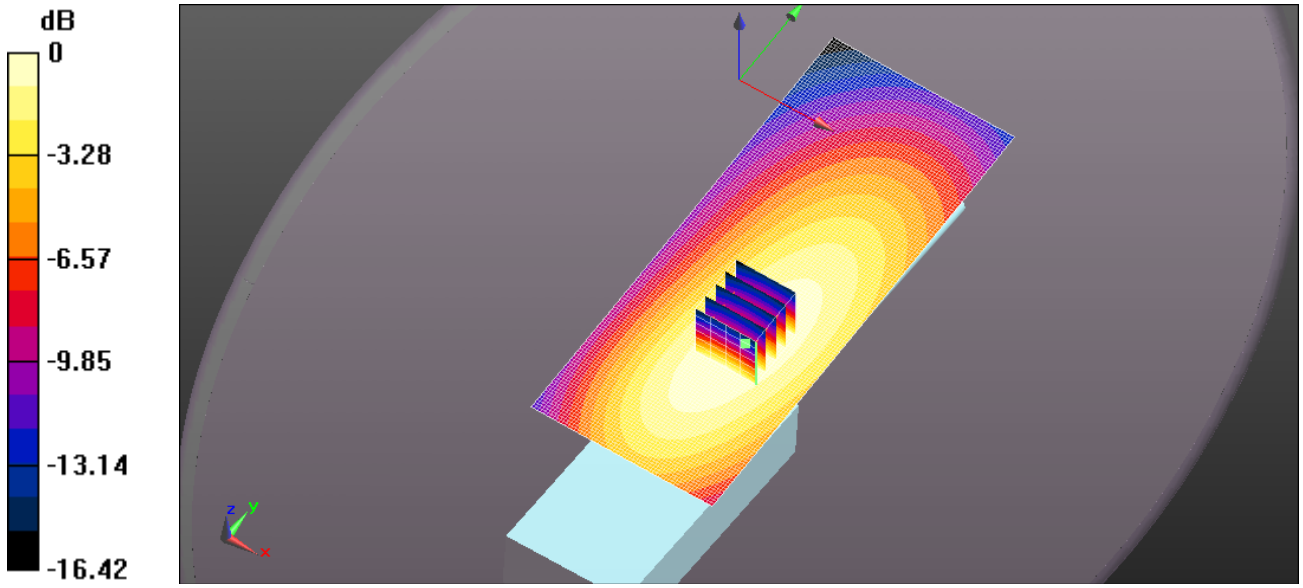

0 dB = 6.95 W/kg = 8.42 dBW/kg

Test Laboratory: Ultratech Group of Labs

FILE NAME: ICOM-442Q BP-283 FA-S76UC 142MM 500MHZ.DA52:0

DUT: IC-F4400DT; Type: UHF Transceiver; Serial: 31000402

Communication System: UID 0, CW (0); Frequency: 500 MHz; Duty Cycle: 1:1
Medium parameters used: f = 500 MHz; σ = 0.953 S/m; ε_r = 56.38; ρ = 1000 kg/m^3 ; Phantom section: Flat Section ; Measurement Standard: DASY5 (IEEE/IEC/ANSI C63.19-2007)

DASY Configuration:

- Probe: ES3DV3 - SN3250; ConvF(6.93, 6.93, 6.93); Calibrated: 3/22/2016;
- Sensor-Surface: 3mm (Mechanical Surface Detection)
- Electronics: DAE4 Sn874; Calibrated: 8/22/2016
- Phantom: ELI 4.0; Type: QD OVA 001 BB; Serial: 1057
- DASY52 52.8.8(1222); SEMCAD X 14.6.10(7331)

Configuration_Body_IC-F4400DT/Body Back, P=5W, d=0mm/Area Scan (61x151x1):

Interpolated grid: dx=1.500 mm, dy=1.500 mm
Maximum value of SAR (interpolated) = 5.98 W/kg

Configuration_Body_IC-F4400DT/Body Back, P=5W, d=0mm/Zoom Scan (5x5x7) (5x5x7)/Cube 0:

Measurement grid: dx=7.5mm, dy=7.5mm, dz=5mm
Reference Value = 78.45 V/m; Power Drift = -0.05 dB
Peak SAR (extrapolated) = 7.60 W/kg
SAR(1 g) = 5.35 W/kg; SAR(10 g) = 3.92 W/kg (SAR corrected for target medium)
Maximum value of SAR (measured) = 6.01 W/kg

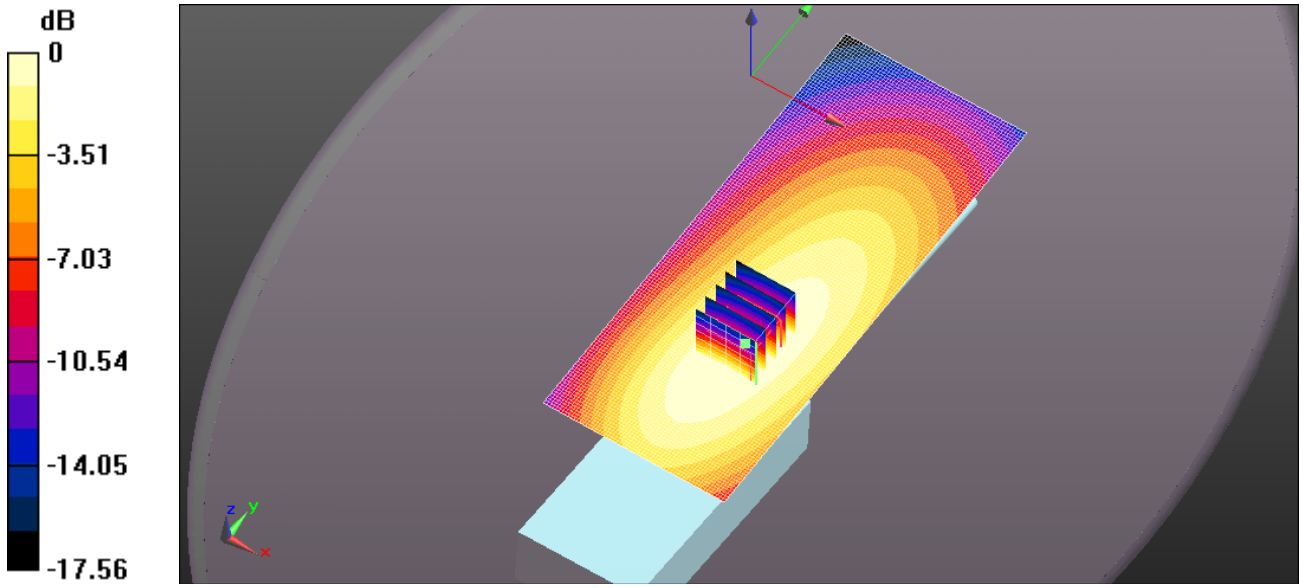

0 dB = 5.98 W/kg = 7.77 dBW/kg

Test Laboratory: Ultratech Group of Labs

File Name: ICOM-442Q BP-283 FA-S76UC 142mm 512MHz.da52:0

DUT: IC-F4400DT; Type: UHF Transceiver; Serial: 31000402

Communication System: UID 0, CW (0); Frequency: 512 MHz; Duty Cycle: 1:1
Medium parameters used (interpolated): f = 512 MHz; σ = 0.962 S/m; ε_r = 56.248; ρ = 1000 kg/m^3 ;
Phantom section: Flat Section ; Measurement Standard: DASY5 (IEEE/IEC/ANSI C63.19-2007)

DASY Configuration:

- Probe: ES3DV3 - SN3250; ConvF(6.93, 6.93, 6.93); Calibrated: 3/22/2016;
- Sensor-Surface: 3mm (Mechanical Surface Detection)
- Electronics: DAE4 Sn874; Calibrated: 8/22/2016
- Phantom: ELI 4.0; Type: QD OVA 001 BB; Serial: 1057
- DASY52 52.8.8(1222); SEMCAD X 14.6.10(7331)

Configuration_Body_IC-F4400DT/Body Back, P=5W, d=0mm/Area Scan (61x151x1):

Interpolated grid: dx=1.500 mm, dy=1.500 mm
Maximum value of SAR (interpolated) = 5.76 W/kg

Configuration_Body_IC-F4400DT/Body Back, P=5W, d=0mm/Zoom Scan (5x5x7) (5x5x7)/Cube 0:

Measurement grid: dx=7.5mm, dy=7.5mm, dz=5mm
Reference Value = 81.53 V/m; Power Drift = -0.13 dB
Peak SAR (extrapolated) = 7.23 W/kg
SAR(1 g) = 5.11 W/kg; SAR(10 g) = 3.75 W/kg (SAR corrected for target medium)
Maximum value of SAR (measured) = 5.76 W/kg

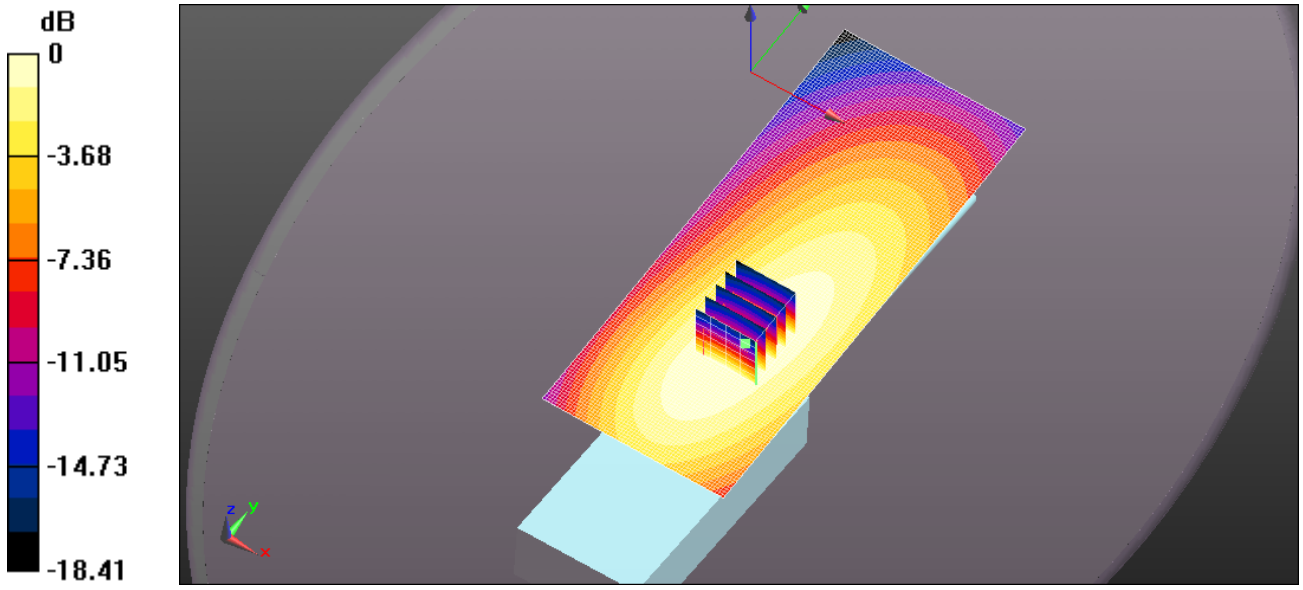

0 dB = 5.76 W/kg = 7.61 dBW/kg

Test Laboratory: Ultratech Group of Labs

FILE NAME: ICOM-442Q BP-283 FA-S76UC 136MM 450MHZ.DA52:0

DUT: IC-F4400DT; Type: UHF Transceiver; Serial: 31000402

Communication System: UID 0, CW (0); Frequency: 450 MHz; Duty Cycle: 1:1
Medium parameters used: f = 450 MHz; σ = 0.91 S/m; ε_r = 56.998; ρ = 1000 kg/m^3 ; Phantom section: Flat Section ; Measurement Standard: DASY5 (IEEE/IEC/ANSI C63.19-2007)

DASY Configuration:

- Probe: ES3DV3 - SN3250; ConvF(6.93, 6.93, 6.93); Calibrated: 3/22/2016;
- Sensor-Surface: 3mm (Mechanical Surface Detection)
- Electronics: DAE4 Sn874; Calibrated: 8/22/2016
- Phantom: ELI 4.0; Type: QD OVA 001 BB; Serial: 1057
- DASY52 52.8.8(1222); SEMCAD X 14.6.10(7331)

Configuration_Body_IC-F4400DT/Body Back, P=5W, d=0mm/Area Scan (61x151x1):

Interpolated grid: dx=1.500 mm, dy=1.500 mm
Maximum value of SAR (interpolated) = 10.2 W/kg

Configuration_Body_IC-F4400DT/Body Back, P=5W, d=0mm/Zoom Scan (5x5x7) (5x5x7)/Cube 0:

Measurement grid: dx=7.5mm, dy=7.5mm, dz=5mm
Reference Value = 108.2 V/m; Power Drift = -0.22 dB
Peak SAR (extrapolated) = 12.5 W/kg
SAR(1 g) = 9.24 W/kg; SAR(10 g) = 6.7 W/kg (SAR corrected for target medium)
Maximum value of SAR (measured) = 10.0 W/kg

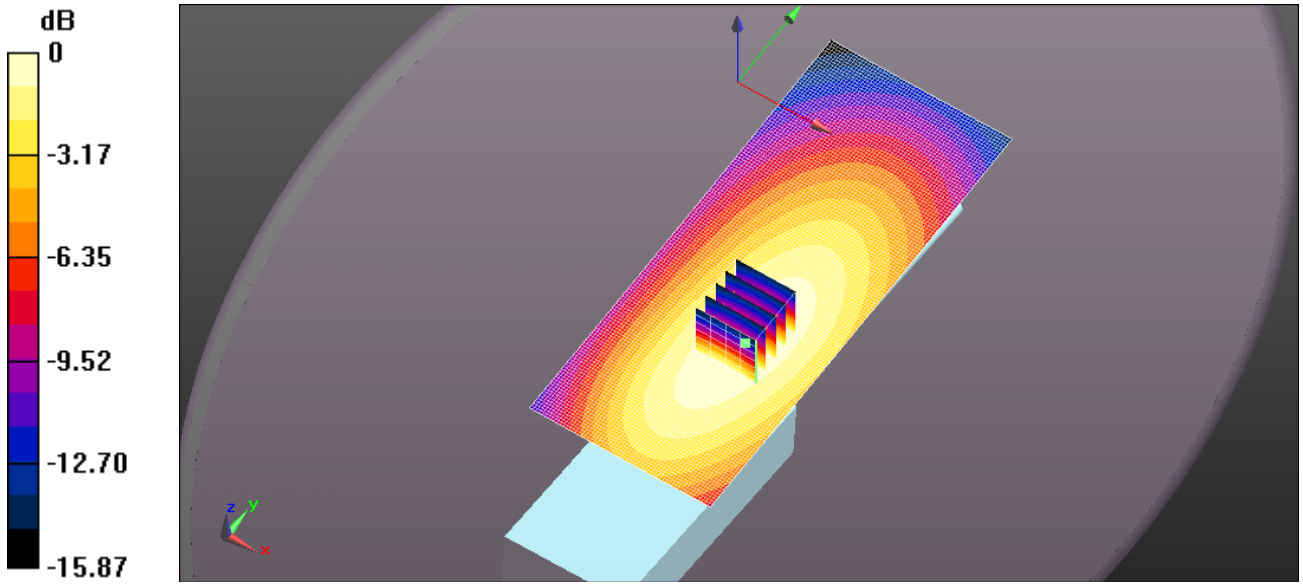

0 dB = 10.2 W/kg = 10.09 dBW/kg

Test Laboratory: Ultratech Group of Labs

FILE NAME: ICOM-442Q BP-283 FA-S76UC 136MM 460MHZ.DA52:0

DUT: IC-F4400DT; Type: UHF Transceiver; Serial: 31000402

Communication System: UID 0, CW (0); Frequency: 460 MHz; Duty Cycle: 1:1
Medium parameters used: f = 460 MHz; σ = 0.92 S/m; ε_r = 56.886; ρ = 1000 kg/m^3 ; Phantom section: Flat Section ; Measurement Standard: DASY5 (IEEE/IEC/ANSI C63.19-2007)

DASY Configuration:

- Probe: ES3DV3 - SN3250; ConvF(6.93, 6.93, 6.93); Calibrated: 3/22/2016;
- Sensor-Surface: 3mm (Mechanical Surface Detection)
- Electronics: DAE4 Sn874; Calibrated: 8/22/2016
- Phantom: ELI 4.0; Type: QD OVA 001 BB; Serial: 1057
- DASY52 52.8.8(1222); SEMCAD X 14.6.10(7331)

Configuration_Body_IC-F4400DT/Body Back, P=5W, d=0mm/Area Scan (61x151x1):

Interpolated grid: dx=1.500 mm, dy=1.500 mm
Maximum value of SAR (interpolated) = 9.66 W/kg

Configuration_Body_IC-F4400DT/Body Back, P=5W, d=0mm/Zoom Scan (5x5x7) (5x5x7)/Cube 0:

Measurement grid: dx=7.5mm, dy=7.5mm, dz=5mm
Reference Value = 104.3 V/m; Power Drift = -0.23 dB
Peak SAR (extrapolated) = 11.9 W/kg
SAR(1 g) = 8.49 W/kg; SAR(10 g) = 6.24 W/kg (SAR corrected for target medium)
Maximum value of SAR (measured) = 9.52 W/kg

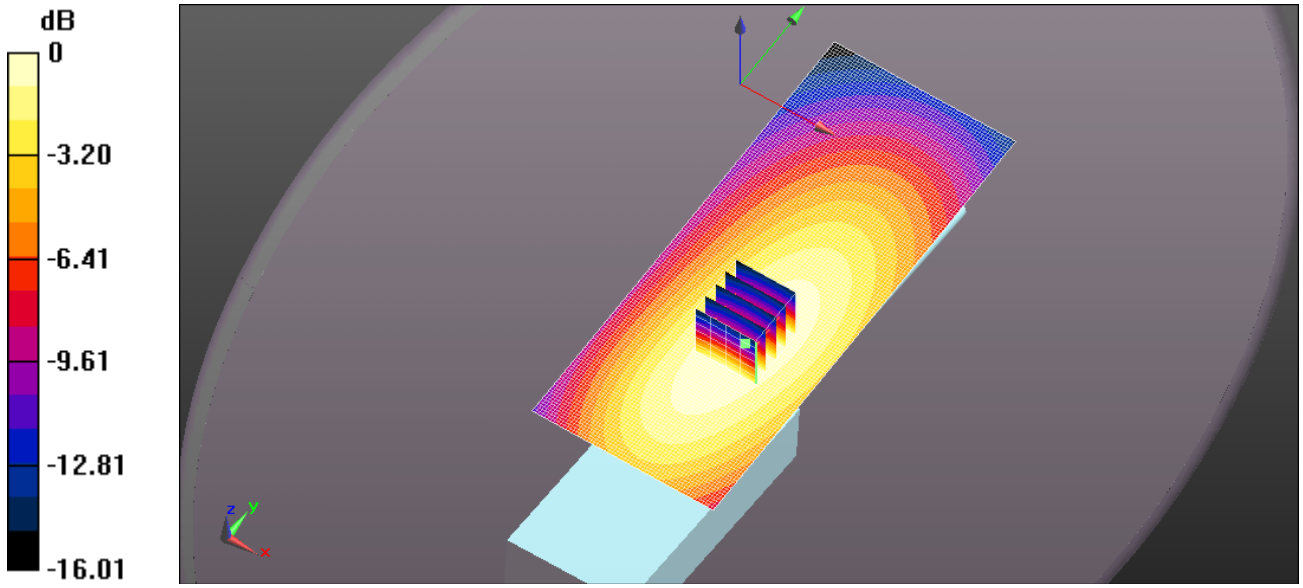

0 dB = 9.66 W/kg = 9.85 dBW/kg

Test Laboratory: Ultratech Group of Labs

FILE NAME: ICOM-442Q BP-283 FA-S76UC 136MM 4800MHZ.DA52:0

DUT: IC-F4400DT; Type: UHF Transceiver; Serial: 31000402

Communication System: UID 0, CW (0); Frequency: 480 MHz; Duty Cycle: 1:1
Medium parameters used: f = 480 MHz; σ = 0.937 S/m; ε_r = 56.627; ρ = 1000 kg/m^3 ; Phantom section: Flat Section ; Measurement Standard: DASY5 (IEEE/IEC/ANSI C63.19-2007)

DASY Configuration:

- Probe: ES3DV3 - SN3250; ConvF(6.93, 6.93, 6.93); Calibrated: 3/22/2016;
- Sensor-Surface: 3mm (Mechanical Surface Detection)
- Electronics: DAE4 Sn874; Calibrated: 8/22/2016
- Phantom: ELI 4.0; Type: QD OVA 001 BB; Serial: 1057
- DASY52 52.8.8(1222); SEMCAD X 14.6.10(7331)

Configuration_Body_IC-F4400DT/Body Back, P=5W, d=0mm/Area Scan (61x151x1):

Interpolated grid: dx=1.500 mm, dy=1.500 mm
Maximum value of SAR (interpolated) = 9.06 W/kg

Configuration_Body_IC-F4400DT/Body Back, P=5W, d=0mm/Zoom Scan (5x5x7) (5x5x7)/Cube 0:

Measurement grid: dx=7.5mm, dy=7.5mm, dz=5mm
Reference Value = 99.29 V/m; Power Drift = -0.17 dB
Peak SAR (extrapolated) = 11.2 W/kg
SAR(1 g) = 7.99 W/kg; SAR(10 g) = 5.85 W/kg (SAR corrected for target medium)
Maximum value of SAR (measured) = 8.96 W/kg

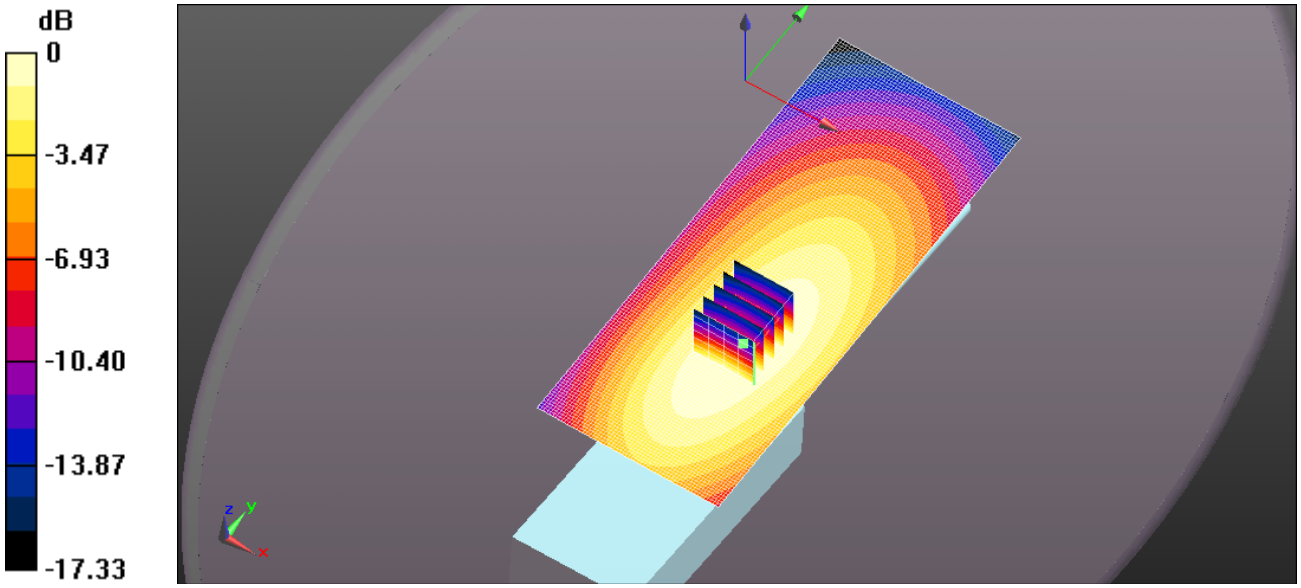

0 dB = 9.06 W/kg = 9.57 dBW/kg

Test Laboratory: Ultratech Group of Labs

File Name: ICOM-442Q BP-283 FA-S76UC 136mm 500MHz.da52:0

DUT: IC-F4400DT; Type: UHF Transceiver; Serial: 31000402

Communication System: UID 0, CW (0); Frequency: 500 MHz; Duty Cycle: 1:1
Medium parameters used: f = 500 MHz; σ = 0.953 S/m; ε_r = 56.38; ρ = 1000 kg/m^3 ; Phantom section: Flat Section ; Measurement Standard: DASY5 (IEEE/IEC/ANSI C63.19-2007)

DASY Configuration:

- Probe: ES3DV3 - SN3250; ConvF(6.93, 6.93, 6.93); Calibrated: 3/22/2016;
- Sensor-Surface: 3mm (Mechanical Surface Detection)
- Electronics: DAE4 Sn874; Calibrated: 8/22/2016
- Phantom: ELI 4.0; Type: QD OVA 001 BB; Serial: 1057
- DASY52 52.8.8(1222); SEMCAD X 14.6.10(7331)

Configuration_Body_IC-F4400DT/Body Back, P=5W, d=0mm/Area Scan (61x151x1):

Interpolated grid: dx=1.500 mm, dy=1.500 mm
Maximum value of SAR (interpolated) = 8.92 W/kg

Configuration_Body_IC-F4400DT/Body Back, P=5W, d=0mm/Zoom Scan (5x5x7) (5x5x7)/Cube 0:

Measurement grid: dx=7.5mm, dy=7.5mm, dz=5mm
Reference Value = 96.31 V/m; Power Drift = -0.10 dB
Peak SAR (extrapolated) = 11.2 W/kg
SAR(1 g) = 7.9 W/kg; SAR(10 g) = 5.79 W/kg (SAR corrected for target medium)
Maximum value of SAR (measured) = 8.89 W/kg

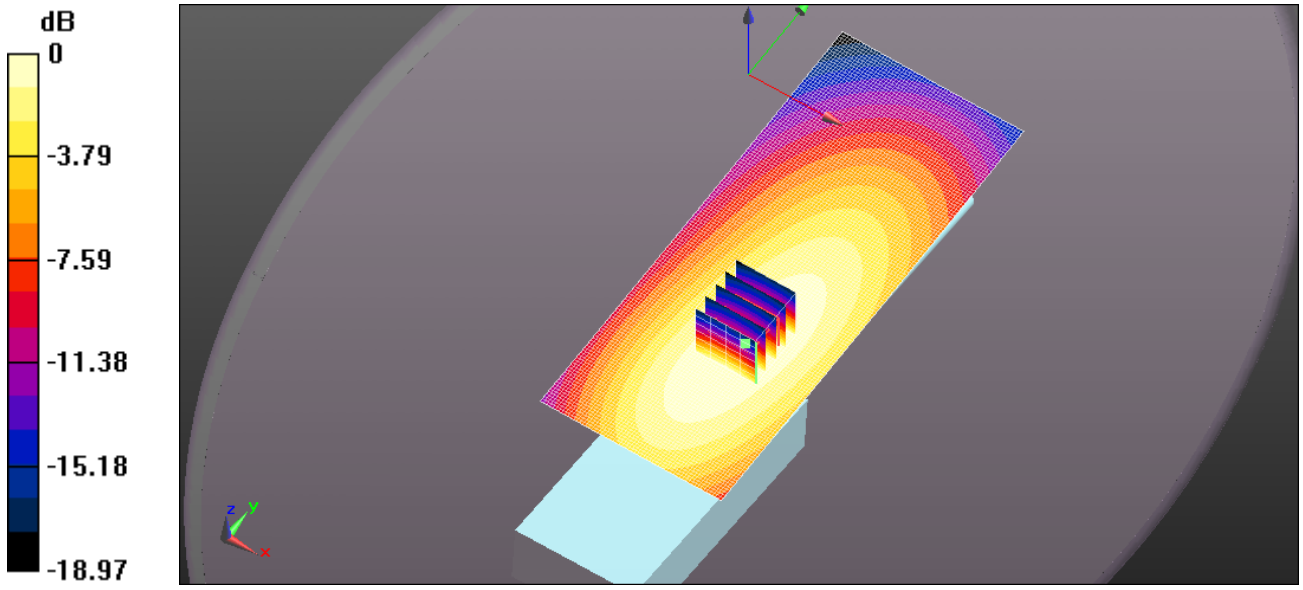

0 dB = 8.92 W/kg = 9.51 dBW/kg

Test Laboratory: Ultratech Group of Labs

File Name: ICOM-442Q BP-283 FA-S76UC 136mm 512MHz.da52:0

DUT: IC-F4400DT; Type: UHF Transceiver; Serial: 31000402

Communication System: UID 0, CW (0); Frequency: 512 MHz; Duty Cycle: 1:1
Medium parameters used (interpolated): f = 512 MHz; σ = 0.962 S/m; ε_r = 56.248; ρ = 1000 kg/m^3 ;
Phantom section: Flat Section ; Measurement Standard: DASY5 (IEEE/IEC/ANSI C63.19-2007)

DASY Configuration:

- Probe: ES3DV3 - SN3250; ConvF(6.93, 6.93, 6.93); Calibrated: 3/22/2016;
- Sensor-Surface: 3mm (Mechanical Surface Detection)
- Electronics: DAE4 Sn874; Calibrated: 8/22/2016
- Phantom: ELI 4.0; Type: QD OVA 001 BB; Serial: 1057
- DASY52 52.8.8(1222); SEMCAD X 14.6.10(7331)

Configuration_Body_IC-F4400DT/Body Back, P=5W, d=0mm/Area Scan (61x151x1):

Interpolated grid: dx=1.500 mm, dy=1.500 mm
Maximum value of SAR (interpolated) = 8.15 W/kg

Configuration_Body_IC-F4400DT/Body Back, P=5W, d=0mm/Zoom Scan (5x5x7) (5x6x7)/Cube 0:

Measurement grid: dx=7.5mm, dy=7.5mm, dz=5mm
Reference Value = 91.02 V/m; Power Drift = -0.09 dB
Peak SAR (extrapolated) = 10.2 W/kg
SAR(1 g) = 7.24 W/kg; SAR(10 g) = 5.31 W/kg (SAR corrected for target medium)
Maximum value of SAR (measured) = 8.15 W/kg

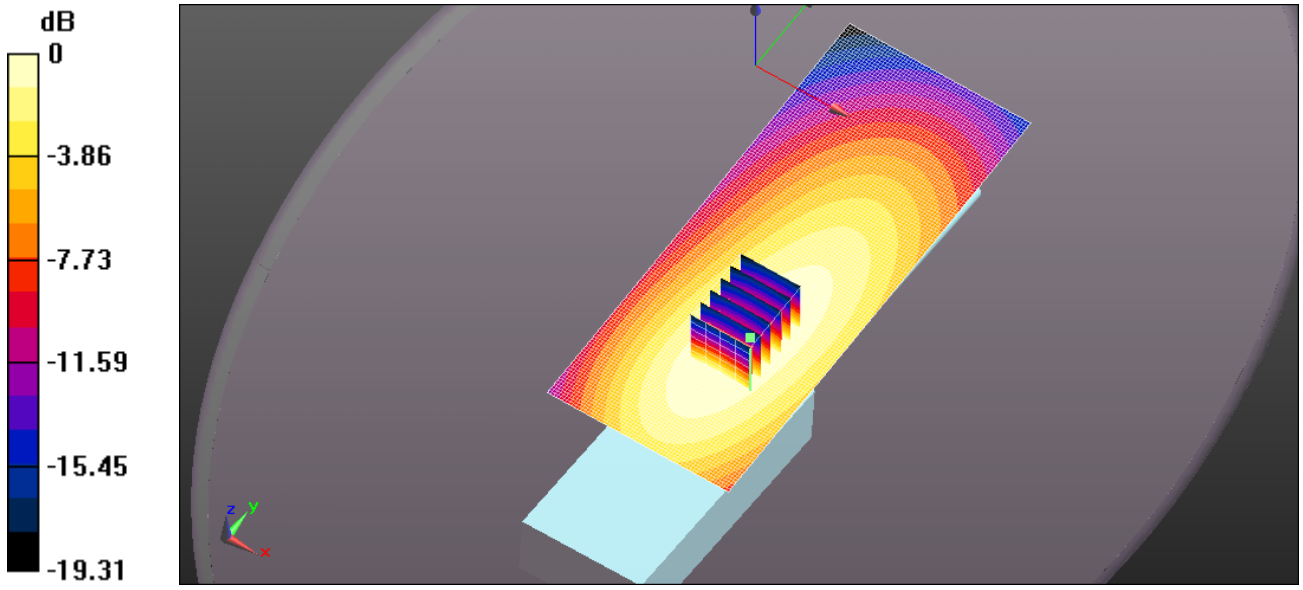

0 dB = 8.15 W/kg = 9.11 dBW/kg

Test Laboratory: Ultratech Group of Labs

FILE NAME: ICOM-442Q BP-283 FA-S76UC 129MM 450MHZ.DA52:0

DUT: IC-F4400DT; Type: UHF Transceiver; Serial: 31000402

Communication System: UID 0, CW (0); Frequency: 450 MHz; Duty Cycle: 1:1
Medium parameters used: f = 450 MHz; σ = 0.91 S/m; ε_r = 56.998; ρ = 1000 kg/m^3 ; Phantom section: Flat Section ; Measurement Standard: DASY5 (IEEE/IEC/ANSI C63.19-2007)

DASY Configuration:

- Probe: ES3DV3 - SN3250; ConvF(6.93, 6.93, 6.93); Calibrated: 3/22/2016;
- Sensor-Surface: 3mm (Mechanical Surface Detection)
- Electronics: DAE4 Sn874; Calibrated: 8/22/2016
- Phantom: ELI 4.0; Type: QD OVA 001 BB; Serial: 1057
- DASY52 52.8.8(1222); SEMCAD X 14.6.10(7331)

Configuration_Body_IC-F4400DT/Body Back, P=5W, d=0mm/Area Scan (61x151x1):

Interpolated grid: dx=1.500 mm, dy=1.500 mm
Maximum value of SAR (interpolated) = 10.5 W/kg

Configuration_Body_IC-F4400DT/Body Back, P=5W, d=0mm/Zoom Scan (5x5x7) (5x5x7)/Cube 0:

Measurement grid: dx=7.5mm, dy=7.5mm, dz=5mm
Reference Value = 109.8 V/m; Power Drift = -0.18 dB
Peak SAR (extrapolated) = 12.6 W/kg
SAR(1 g) = 9.34 W/kg; SAR(10 g) = 6.79 W/kg (SAR corrected for target medium)
Maximum value of SAR (measured) = 10.1 W/kg

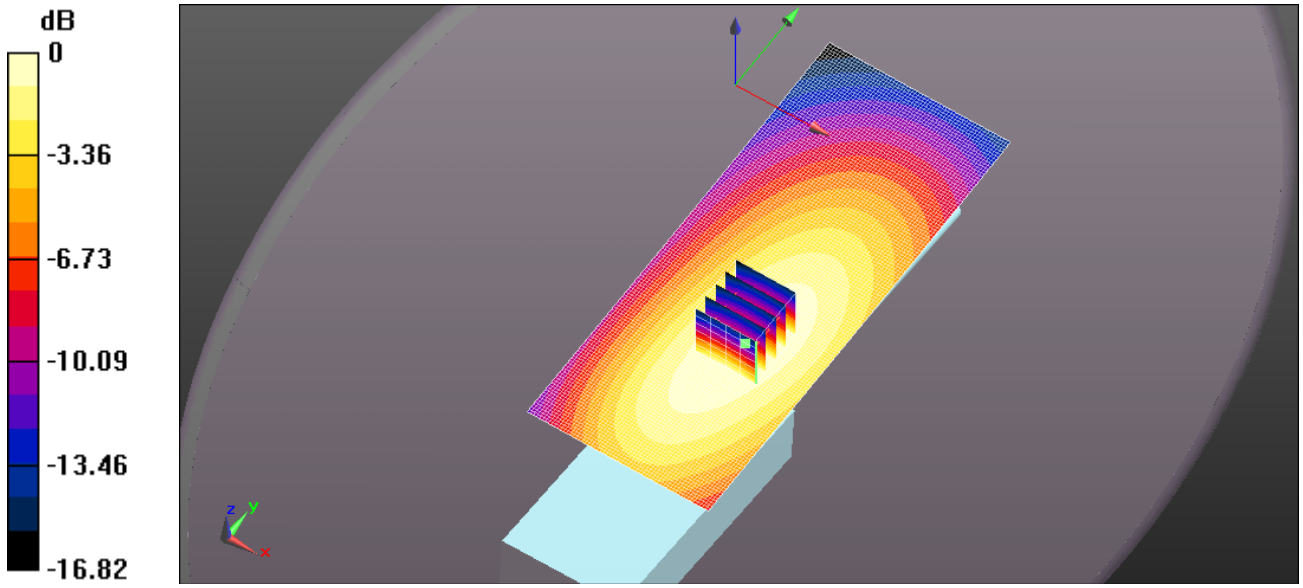

0 dB = 10.5 W/kg = 10.23 dBW/kg

Test Laboratory: Ultratech Group of Labs

FILE NAME: ICOM-442Q BP-283 FA-S76UC 129MM 460MHZ.DA52:0

DUT: IC-F4400DT; Type: UHF Transceiver; Serial: 31000402

Communication System: UID 0, CW (0); Frequency: 460 MHz; Duty Cycle: 1:1
Medium parameters used: f = 460 MHz; σ = 0.92 S/m; ε_r = 56.886; ρ = 1000 kg/m^3 ; Phantom section: Flat Section ; Measurement Standard: DASY5 (IEEE/IEC/ANSI C63.19-2007)

DASY Configuration:

- Probe: ES3DV3 - SN3250; ConvF(6.93, 6.93, 6.93); Calibrated: 3/22/2016;
- Sensor-Surface: 3mm (Mechanical Surface Detection)
- Electronics: DAE4 Sn874; Calibrated: 8/22/2016
- Phantom: ELI 4.0; Type: QD OVA 001 BB; Serial: 1057
- DASY52 52.8.8(1222); SEMCAD X 14.6.10(7331)

Configuration_Body_IC-F4400DT/Body Back, P=5W, d=0mm/Area Scan (61x151x1):

Interpolated grid: dx=1.500 mm, dy=1.500 mm
Maximum value of SAR (interpolated) = 10.1 W/kg

Configuration_Body_IC-F4400DT/Body Back, P=5W, d=0mm/Zoom Scan (5x5x7) (5x5x7)/Cube 0:

Measurement grid: dx=7.5mm, dy=7.5mm, dz=5mm
Reference Value = 109.8 V/m; Power Drift = -0.21 dB
Peak SAR (extrapolated) = 11.9 W/kg
SAR(1 g) = 8.5 W/kg; SAR(10 g) = 6.25 W/kg (SAR corrected for target medium)
Maximum value of SAR (measured) = 9.50 W/kg

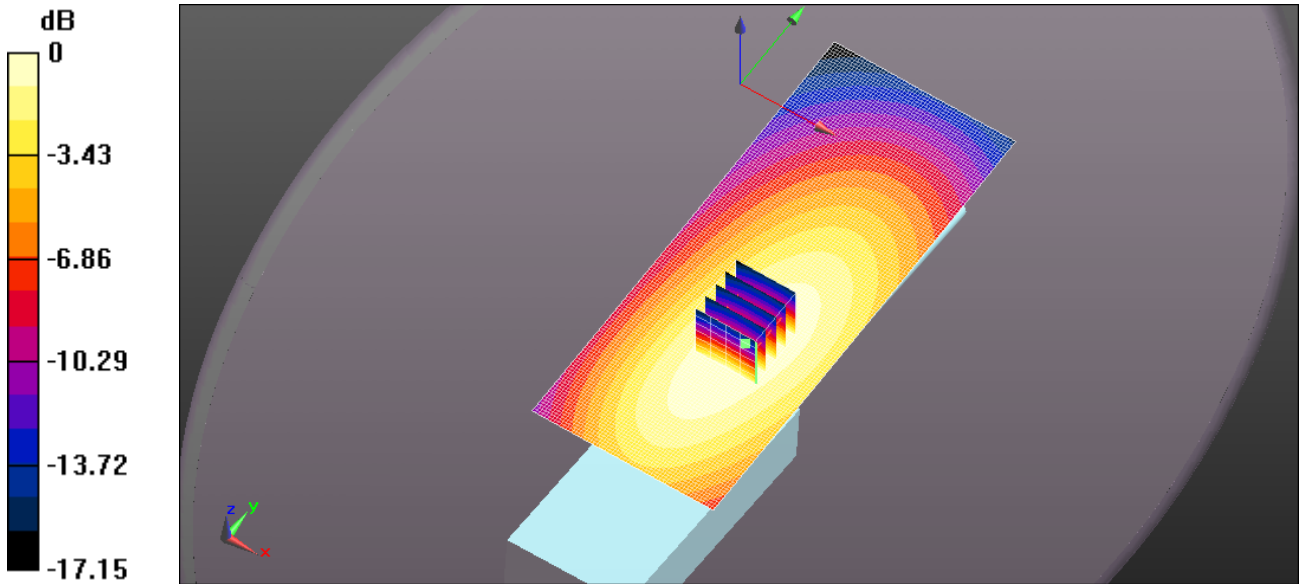

0 dB = 10.1 W/kg = 10.05 dBW/kg

Test Laboratory: Ultratech Group of Labs

File Name: ICOM-442Q BP-283 FA-S76UC 129mm 480MHz.da52:0

DUT: IC-F4400DT; Type: UHF Transceiver; Serial: 31000402

Communication System: UID 0, CW (0); Frequency: 480 MHz; Duty Cycle: 1:1
Medium parameters used: f = 480 MHz; σ = 0.937 S/m; ε_r = 56.627; ρ = 1000 kg/m^3 ; Phantom section: Flat Section ; Measurement Standard: DASY5 (IEEE/IEC/ANSI C63.19-2007)

DASY Configuration:

- Probe: ES3DV3 - SN3250; ConvF(6.93, 6.93, 6.93); Calibrated: 3/22/2016;
- Sensor-Surface: 3mm (Mechanical Surface Detection)
- Electronics: DAE4 Sn874; Calibrated: 8/22/2016
- Phantom: ELI 4.0; Type: QD OVA 001 BB; Serial: 1057
- DASY52 52.8.8(1222); SEMCAD X 14.6.10(7331)

Configuration_Body_IC-F4400DT/Body Back, P=5W, d=0mm/Area Scan (61x151x1):

Interpolated grid: dx=1.500 mm, dy=1.500 mm
Maximum value of SAR (interpolated) = 9.50 W/kg

Configuration_Body_IC-F4400DT/Body Back, P=5W, d=0mm/Zoom Scan (5x5x7) (5x5x7)/Cube 0:

Measurement grid: dx=7.5mm, dy=7.5mm, dz=5mm
Reference Value = 102.2 V/m; Power Drift = -0.28 dB
Peak SAR (extrapolated) = 11.6 W/kg
SAR(1 g) = 8.32 W/kg; SAR(10 g) = 6.09 W/kg (SAR corrected for target medium)
Maximum value of SAR (measured) = 9.34 W/kg

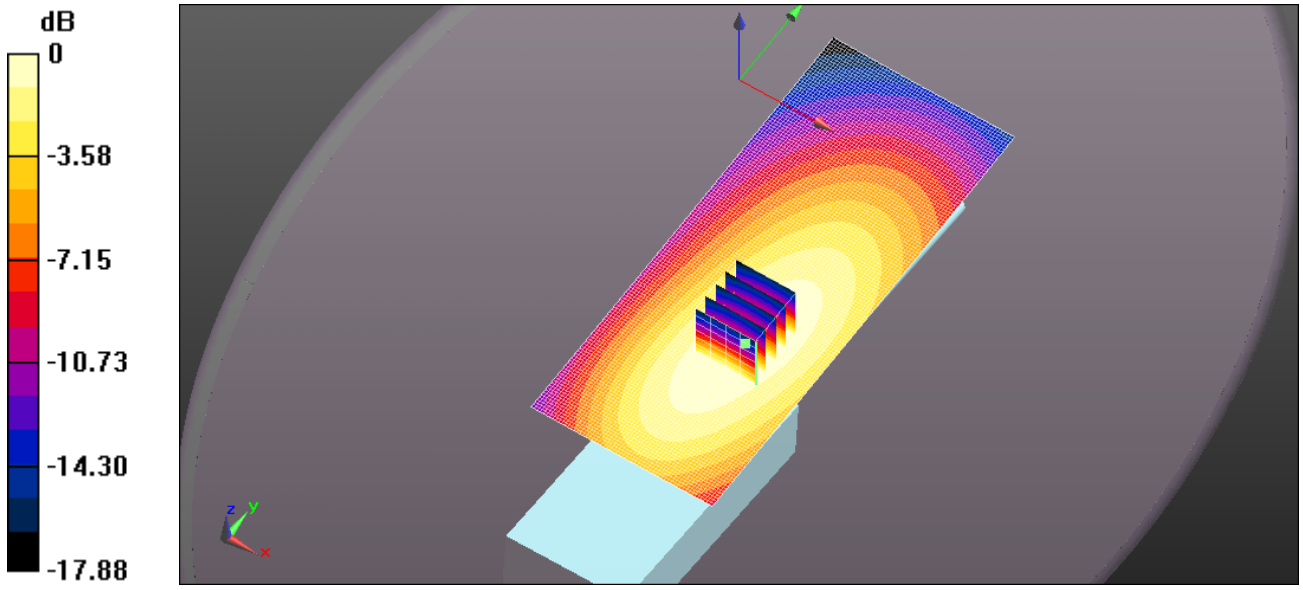

0 dB = 9.50 W/kg = 9.78 dBW/kg

Test Laboratory: Ultratech Group of Labs

FILE NAME: ICOM-442Q BP-283 FA-S76UC 129MM 500MHZ.DA52:0

DUT: IC-F4400DT; Type: UHF Transceiver; Serial: 31000402

Communication System: UID 0, CW (0); Frequency: 500 MHz; Duty Cycle: 1:1
Medium parameters used: f = 500 MHz; σ = 0.953 S/m; ε_r = 56.38; ρ = 1000 kg/m^3 ; Phantom section: Flat Section ; Measurement Standard: DASY5 (IEEE/IEC/ANSI C63.19-2007)

DASY Configuration:

- Probe: ES3DV3 - SN3250; ConvF(6.93, 6.93, 6.93); Calibrated: 3/22/2016;
- Sensor-Surface: 3mm (Mechanical Surface Detection)
- Electronics: DAE4 Sn874; Calibrated: 8/22/2016
- Phantom: ELI 4.0; Type: QD OVA 001 BB; Serial: 1057
- DASY52 52.8.8(1222); SEMCAD X 14.6.10(7331)

Configuration_Body_IC-F4400DT/Body Back, P=5W, d=0mm/Area Scan (61x151x1):

Interpolated grid: dx=1.500 mm, dy=1.500 mm
Maximum value of SAR (interpolated) = 10.4 W/kg

Configuration_Body_IC-F4400DT/Body Back, P=5W, d=0mm/Zoom Scan (5x5x7) (5x5x7)/Cube 0:

Measurement grid: dx=7.5mm, dy=7.5mm, dz=5mm
Reference Value = 104.5 V/m; Power Drift = -0.21 dB
Peak SAR (extrapolated) = 13.1 W/kg
SAR(1 g) = 9.23 W/kg; SAR(10 g) = 6.75 W/kg (SAR corrected for target medium)
Maximum value of SAR (measured) = 10.4 W/kg

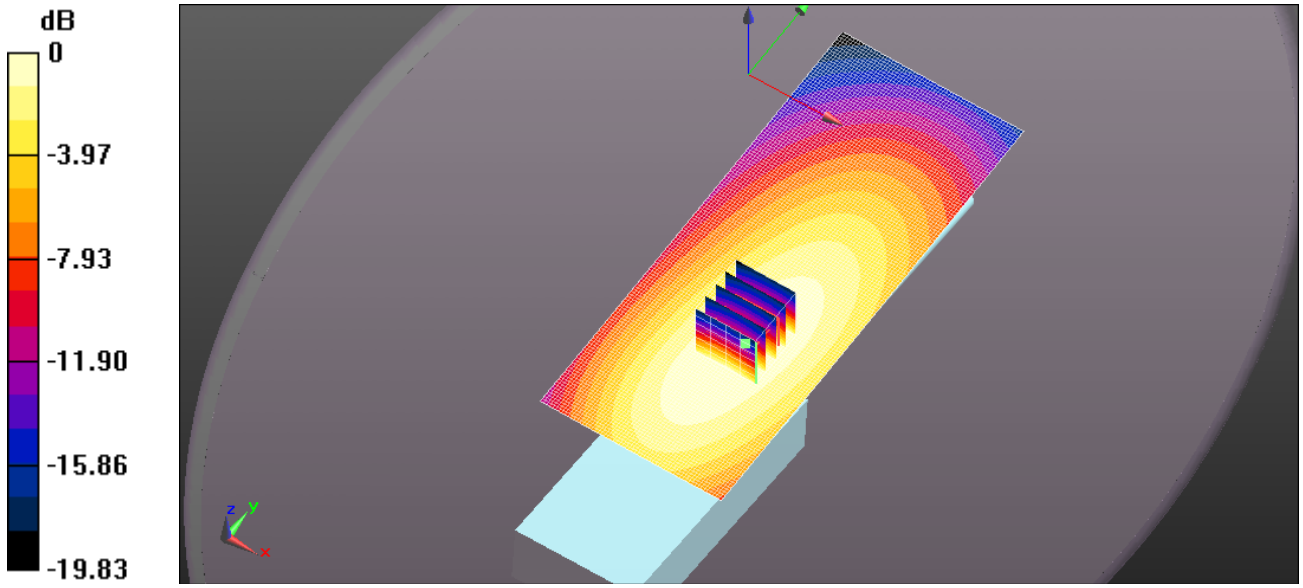

0 dB = 10.4 W/kg = 10.19 dBW/kg

Test Laboratory: Ultratech Group of Labs

FILE NAME: ICOM-442Q BP-283 FA-S76UC 129MM 512MHZ.DA52:0

DUT: IC-F4400DT; Type: UHF Transceiver; Serial: 31000402

Communication System: UID 0, CW (0); Frequency: 512 MHz; Duty Cycle: 1:1
Medium parameters used (interpolated): f = 512 MHz; σ = 0.962 S/m; ε_r = 56.248; ρ = 1000 kg/m^3 ;
Phantom section: Flat Section ; Measurement Standard: DASY5 (IEEE/IEC/ANSI C63.19-2007)

DASY Configuration:

- Probe: ES3DV3 - SN3250; ConvF(6.93, 6.93, 6.93); Calibrated: 3/22/2016;
- Sensor-Surface: 3mm (Mechanical Surface Detection)
- Electronics: DAE4 Sn874; Calibrated: 8/22/2016
- Phantom: ELI 4.0; Type: QD OVA 001 BB; Serial: 1057
- DASY52 52.8.8(1222); SEMCAD X 14.6.10(7331)

Configuration_Body_IC-F4400DT/Body Back, P=5W, d=0mm/Area Scan (61x151x1):

Interpolated grid: dx=1.500 mm, dy=1.500 mm
Maximum value of SAR (interpolated) = 9.94 W/kg

Configuration_Body_IC-F4400DT/Body Back, P=5W, d=0mm/Zoom Scan (5x5x7) (6x6x7)/Cube 0:

Measurement grid: dx=7.5mm, dy=7.5mm, dz=5mm
Reference Value = 101.4 V/m; Power Drift = -0.15 dB
Peak SAR (extrapolated) = 12.4 W/kg
SAR(1 g) = 8.8 W/kg; SAR(10 g) = 6.44 W/kg (SAR corrected for target medium)
Maximum value of SAR (measured) = 9.90 W/kg

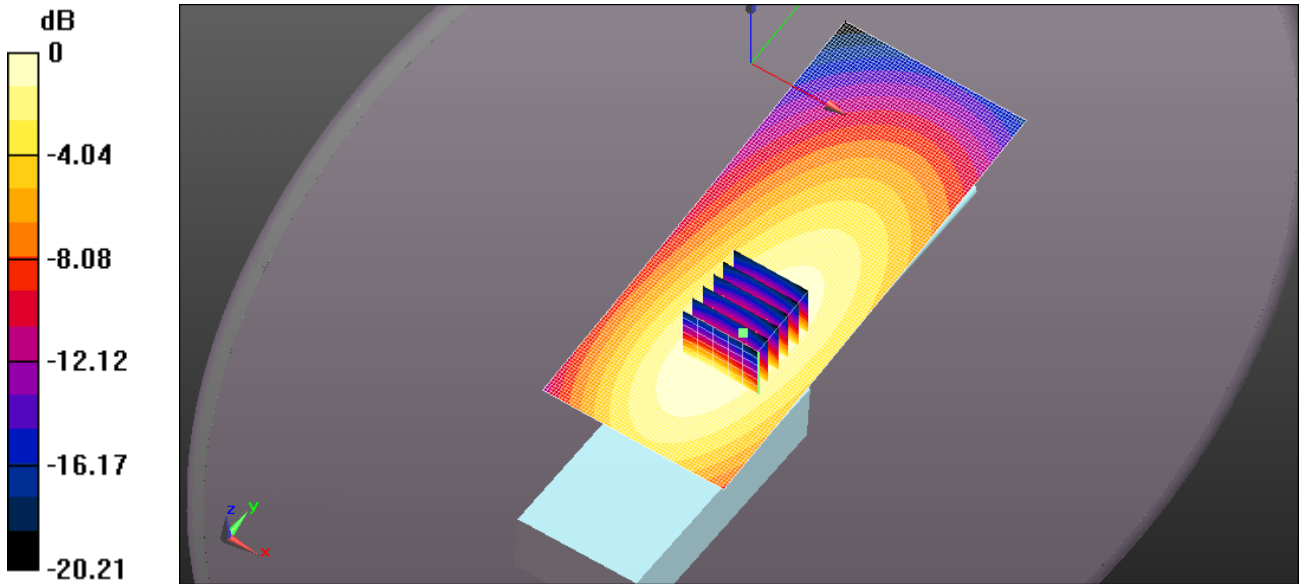

0 dB = 9.94 W/kg = 9.97 dBW/kg

Test Laboratory: Ultratech Group of Labs

FILE NAME: ICOM-442Q BP-283 FA-S76UC 125MM 450MHZ.DA52:0

DUT: IC-F4400DT; Type: UHF Transceiver; Serial: 31000402

Communication System: UID 0, CW (0); Frequency: 450 MHz; Duty Cycle: 1:1
Medium parameters used: f = 450 MHz; σ = 0.91 S/m; ε_r = 56.998; ρ = 1000 kg/m^3 ; Phantom section: Flat Section ; Measurement Standard: DASY5 (IEEE/IEC/ANSI C63.19-2007)

DASY Configuration:

- Probe: ES3DV3 - SN3250; ConvF(6.93, 6.93, 6.93); Calibrated: 3/22/2016;
- Sensor-Surface: 3mm (Mechanical Surface Detection)
- Electronics: DAE4 Sn874; Calibrated: 8/22/2016
- Phantom: ELI 4.0; Type: QD OVA 001 BB; Serial: 1057
- DASY52 52.8.8(1222); SEMCAD X 14.6.10(7331)

Configuration_Body_IC-F4400DT/Body Back, P=5W, d=0mm/Area Scan (61x151x1):

Interpolated grid: dx=1.500 mm, dy=1.500 mm
Maximum value of SAR (interpolated) = 9.82 W/kg

Configuration_Body_IC-F4400DT/Body Back, P=5W, d=0mm/Zoom Scan (5x5x7) (5x5x7)/Cube 0:

Measurement grid: dx=7.5mm, dy=7.5mm, dz=5mm
Reference Value = 105.2 V/m; Power Drift = -0.19 dB
Peak SAR (extrapolated) = 11.6 W/kg
SAR(1 g) = 8.65 W/kg; SAR(10 g) = 6.31 W/kg (SAR corrected for target medium)
Maximum value of SAR (measured) = 9.36 W/kg

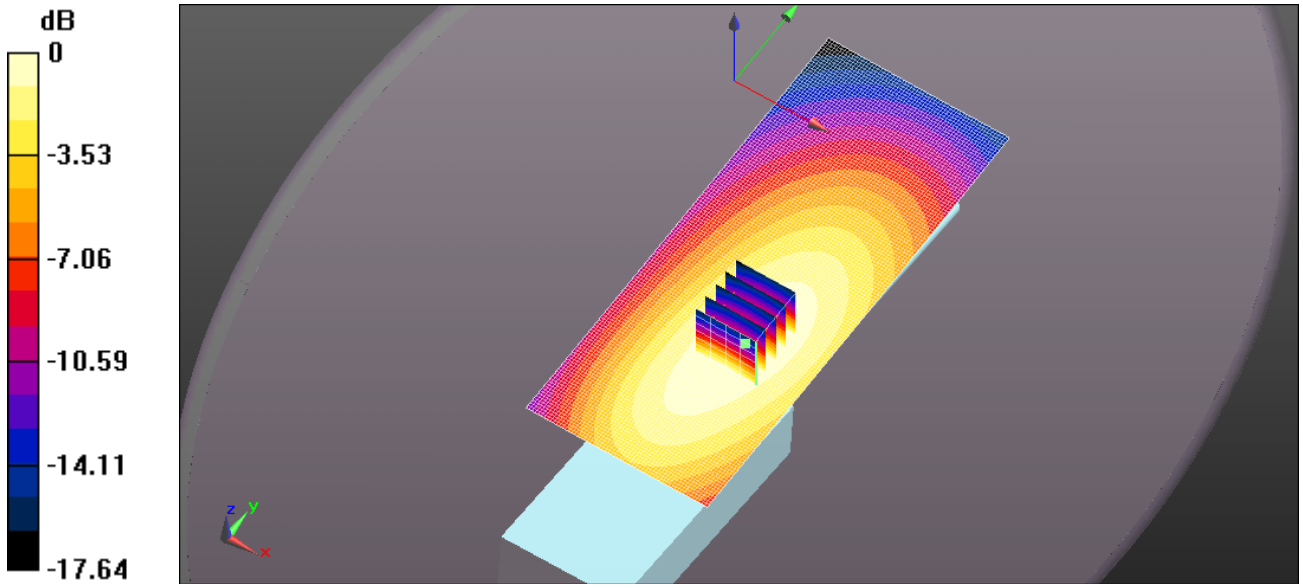

0 dB = 9.82 W/kg = 9.92 dBW/kg

Test Laboratory: Ultratech Group of Labs

FILE NAME: ICOM-442Q BP-283 FA-S76UC 125MM 460MHZ.DA52:0

DUT: IC-F4400DT; Type: UHF Transceiver; Serial: 31000402

Communication System: UID 0, CW (0); Frequency: 460 MHz; Duty Cycle: 1:1
Medium parameters used: f = 460 MHz; σ = 0.92 S/m; ε_r = 56.886; ρ = 1000 kg/m^3 ; Phantom section: Flat Section ; Measurement Standard: DASY5 (IEEE/IEC/ANSI C63.19-2007)

DASY Configuration:

- Probe: ES3DV3 - SN3250; ConvF(6.93, 6.93, 6.93); Calibrated: 3/22/2016;
- Sensor-Surface: 3mm (Mechanical Surface Detection)
- Electronics: DAE4 Sn874; Calibrated: 8/22/2016
- Phantom: ELI 4.0; Type: QD OVA 001 BB; Serial: 1057
- DASY52 52.8.8(1222); SEMCAD X 14.6.10(7331)

Configuration_Body_IC-F4400DT/Body Back, P=5W, d=0mm/Area Scan (61x151x1):

Interpolated grid: dx=1.500 mm, dy=1.500 mm
Maximum value of SAR (interpolated) = 9.36 W/kg

Configuration_Body_IC-F4400DT/Body Back, P=5W, d=0mm/Zoom Scan (5x5x7) (5x5x7)/Cube 0:

Measurement grid: dx=7.5mm, dy=7.5mm, dz=5mm
Reference Value = 104.9 V/m; Power Drift = -0.21 dB
Peak SAR (extrapolated) = 10.9 W/kg
SAR(1 g) = 7.81 W/kg; SAR(10 g) = 5.76 W/kg (SAR corrected for target medium)
Maximum value of SAR (measured) = 8.74 W/kg

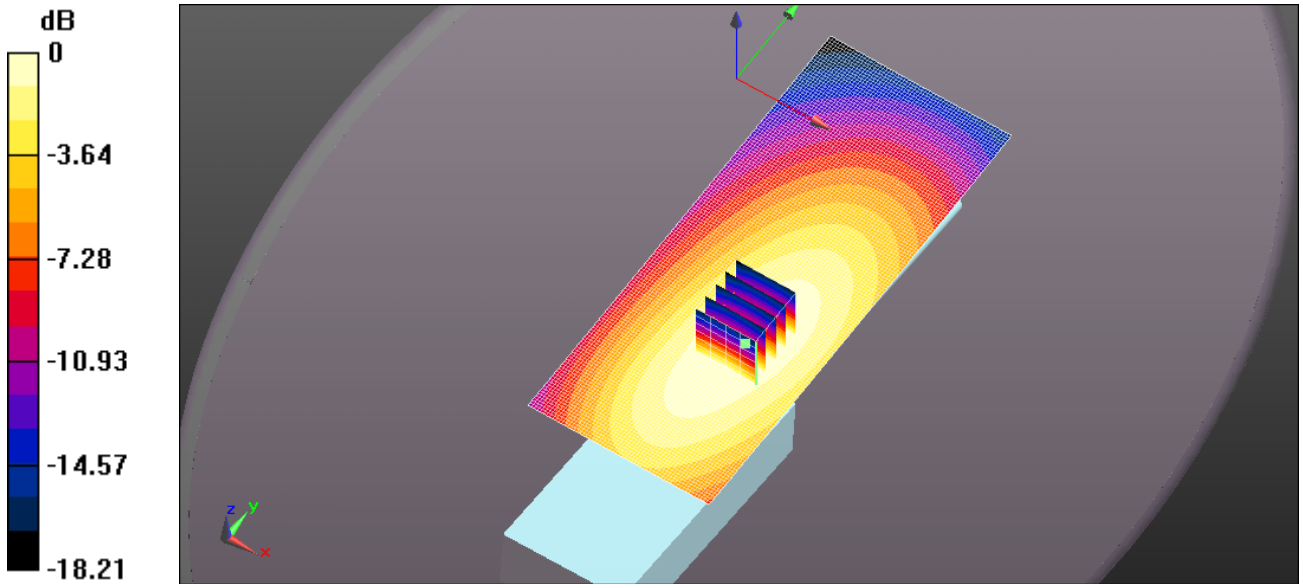

0 dB = 9.36 W/kg = 9.71 dBW/kg

Test Laboratory: Ultratech Group of Labs

FILE NAME: ICOM-442Q BP-283 FA-S76UC 125MM 480MHZ.DA52:0

DUT: IC-F4400DT; Type: UHF Transceiver; Serial: 31000402

Communication System: UID 0, CW (0); Frequency: 480 MHz; Duty Cycle: 1:1
Medium parameters used: f = 480 MHz; σ = 0.937 S/m; ε_r = 56.627; ρ = 1000 kg/m^3 ; Phantom section: Flat Section ; Measurement Standard: DASY5 (IEEE/IEC/ANSI C63.19-2007)

DASY Configuration:

- Probe: ES3DV3 - SN3250; ConvF(6.93, 6.93, 6.93); Calibrated: 3/22/2016;
- Sensor-Surface: 3mm (Mechanical Surface Detection)
- Electronics: DAE4 Sn874; Calibrated: 8/22/2016
- Phantom: ELI 4.0; Type: QD OVA 001 BB; Serial: 1057
- DASY52 52.8.8(1222); SEMCAD X 14.6.10(7331)

Configuration_Body_IC-F4400DT/Body Back, P=5W, d=0mm/Area Scan (61x151x1):

Interpolated grid: dx=1.500 mm, dy=1.500 mm
Maximum value of SAR (interpolated) = 9.46 W/kg

Configuration_Body_IC-F4400DT/Body Back, P=5W, d=0mm/Zoom Scan (5x5x7) (5x5x7)/Cube 0:

Measurement grid: dx=7.5mm, dy=7.5mm, dz=5mm
Reference Value = 101.2 V/m; Power Drift = -0.17 dB
Peak SAR (extrapolated) = 11.4 W/kg
SAR(1 g) = 8.13 W/kg; SAR(10 g) = 5.97 W/kg (SAR corrected for target medium)
Maximum value of SAR (measured) = 9.14 W/kg

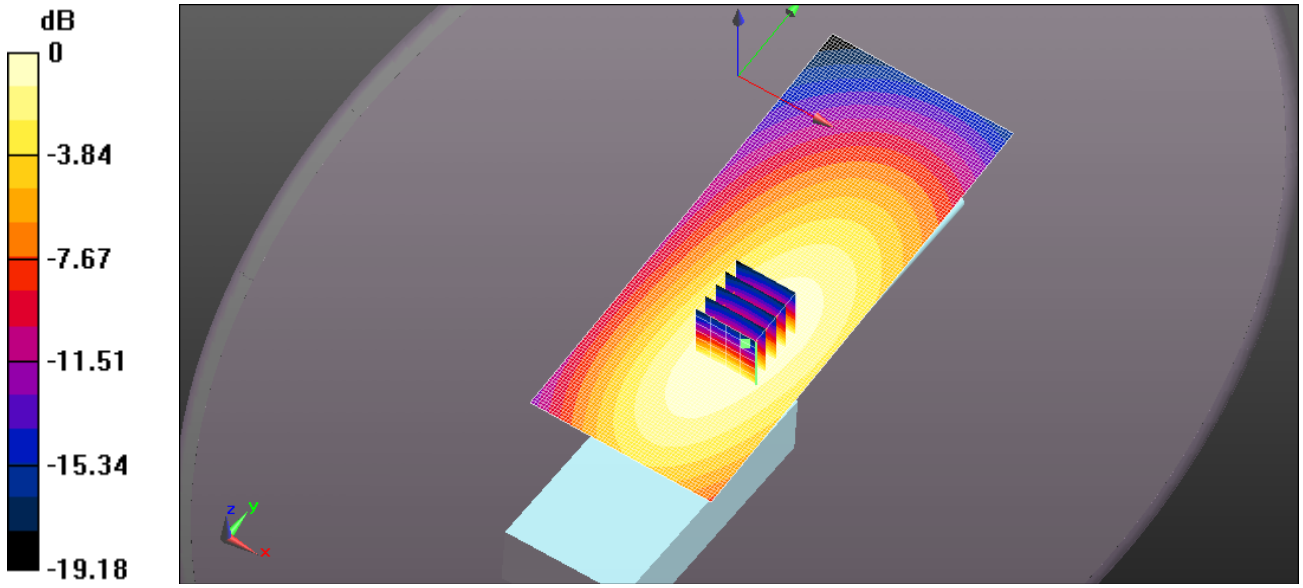

0 dB = 9.46 W/kg = 9.76 dBW/kg

Test Laboratory: Ultratech Group of Labs

FILE NAME: ICOM-442Q BP-283 FA-S76UC 125MM 500MHZ.DA52:0

DUT: IC-F4400DT; Type: UHF Transceiver; Serial: 31000402

Communication System: UID 0, CW (0); Frequency: 500 MHz; Duty Cycle: 1:1
Medium parameters used: f = 500 MHz; σ = 0.953 S/m; ε_r = 56.38; ρ = 1000 kg/m^3 ; Phantom section: Flat Section ; Measurement Standard: DASY5 (IEEE/IEC/ANSI C63.19-2007)

DASY Configuration:

- Probe: ES3DV3 - SN3250; ConvF(6.93, 6.93, 6.93); Calibrated: 3/22/2016;
- Sensor-Surface: 3mm (Mechanical Surface Detection)
- Electronics: DAE4 Sn874; Calibrated: 8/22/2016
- Phantom: ELI 4.0; Type: QD OVA 001 BB; Serial: 1057
- DASY52 52.8.8(1222); SEMCAD X 14.6.10(7331)

Configuration_Body_IC-F4400DT/Body Back, P=5W, d=0mm/Area Scan (61x151x1):

Interpolated grid: dx=1.500 mm, dy=1.500 mm
Maximum value of SAR (interpolated) = 11.3 W/kg

Configuration_Body_IC-F4400DT/Body Back, P=5W, d=0mm/Zoom Scan (5x5x7) (5x5x7)/Cube 0:

Measurement grid: dx=7.5mm, dy=7.5mm, dz=5mm
Reference Value = 108.7 V/m; Power Drift = -0.25 dB
Peak SAR (extrapolated) = 14.0 W/kg
SAR(1 g) = 9.92 W/kg; SAR(10 g) = 7.27 W/kg (SAR corrected for target medium)
Maximum value of SAR (measured) = 11.2 W/kg

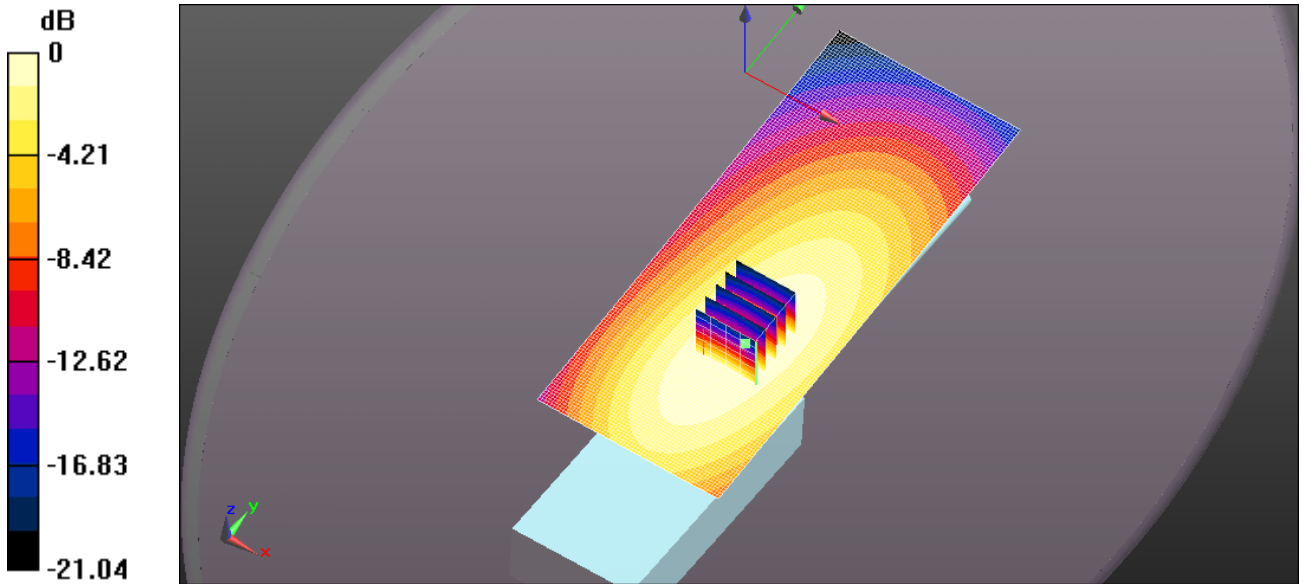

0 dB = 11.3 W/kg = 10.53 dBW/kg

Test Laboratory: Ultratech Group of Labs

FILE NAME: ICOM-442Q BP-283 FA-S76UC 125MM 512MHZ.DA52:0

DUT: IC-F4400DT; Type: UHF Transceiver; Serial: 31000402

Communication System: UID 0, CW (0); Frequency: 512 MHz; Duty Cycle: 1:1
Medium parameters used (interpolated): f = 512 MHz; σ = 0.962 S/m; ε_r = 56.248; ρ = 1000 kg/m^3 ;
Phantom section: Flat Section ; Measurement Standard: DASY5 (IEEE/IEC/ANSI C63.19-2007)

DASY Configuration:

- Probe: ES3DV3 - SN3250; ConvF(6.93, 6.93, 6.93); Calibrated: 3/22/2016;
- Sensor-Surface: 3mm (Mechanical Surface Detection)
- Electronics: DAE4 Sn874; Calibrated: 8/22/2016
- Phantom: ELI 4.0; Type: QD OVA 001 BB; Serial: 1057
- DASY52 52.8.8(1222); SEMCAD X 14.6.10(7331)

Configuration_Body_IC-F4400DT/Body Back, P=5W, d=0mm/Area Scan (61x151x1):

Interpolated grid: dx=1.500 mm, dy=1.500 mm
Maximum value of SAR (interpolated) = 11.8 W/kg

Configuration_Body_IC-F4400DT/Body Back, P=5W, d=0mm/Zoom Scan (5x5x7) (5x5x7)/Cube 0:

Measurement grid: dx=7.5mm, dy=7.5mm, dz=5mm
Reference Value = 110.5 V/m; Power Drift = -0.24 dB
Peak SAR (extrapolated) = 14.7 W/kg
SAR(1 g) = 10.4 W/kg; SAR(10 g) = 7.61 W/kg (SAR corrected for target medium)
Maximum value of SAR (measured) = 11.7 W/kg

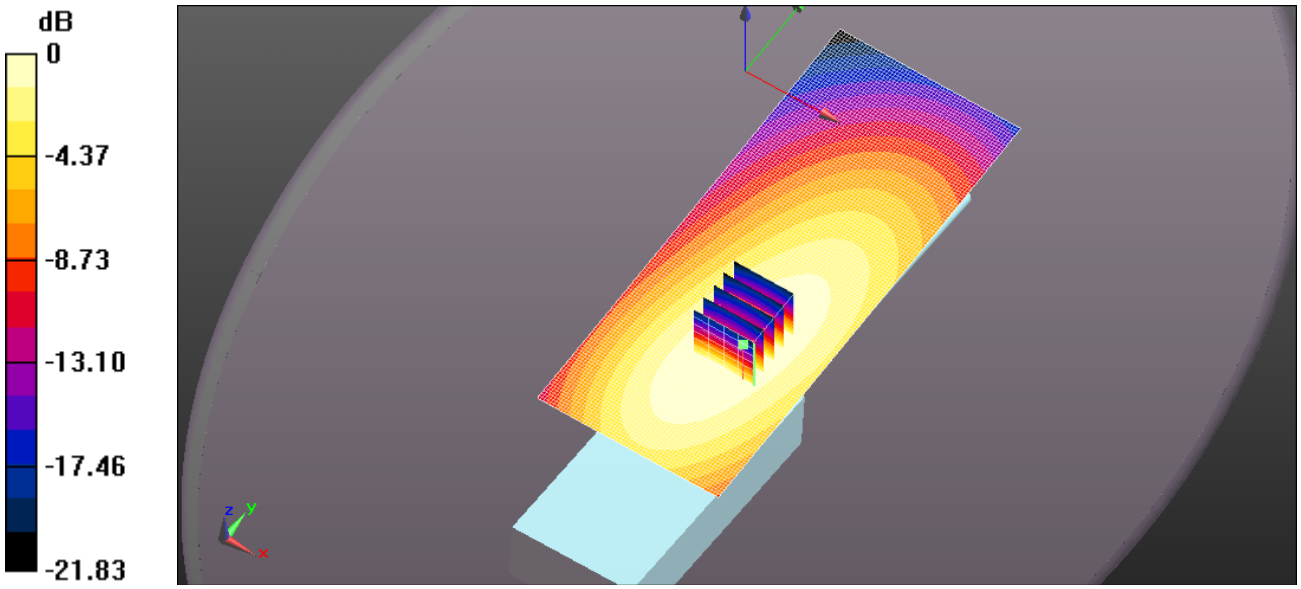

0 dB = 11.8 W/kg = 10.72 dBW/kg