APPENDIX 1

SAR Measurement Data

Table of Contents

EXHIBIT 1. PRESCAN HEAD MEASUREMENT SUMMARY 3

FILE NAME: ICOM-470Q IC-M85 BP-290 FA-SC58V 155MHZ HEAD.DA52:0 4
FILE NAME: ICOM-470Q IC-M85 BP-291 FA-SC58V 155MHZ HEAD.DA52:0 5

EXHIBIT 2. MEASUREMENT SUMMARY 6

FILE NAME: ICOM-470Q IC-M85 BP-290 FA-SC58V 136MHZ HEAD 1.DA52:0 7
FILE NAME: ICOM-470Q IC-M85 BP-290 FA-SC58V 142MHZ HEAD.DA52:0 8
FILE NAME: ICOM-470Q IC-M85 BP-290 FA-SC58V 149MHZ HEAD.DA52:0 9
FILE NAME: ICOM-470Q IC-M85 BP-290 FA-SC58V 155MHZ HEAD.DA52:0 10
FILE NAME: ICOM-470Q IC-M85 BP-290 FA-SC58V 161MHZ HEAD.DA52:0 11
FILE NAME: ICOM-470Q IC-M85 BP-290 FA-SC58V 168MHZ HEAD.DA52:0 12
FILE NAME: ICOM-470Q IC-M85 BP-290 FA-SC58V 174MHZ HEAD.DA52:0 13

EXHIBIT 3. PRESCAN BODY MEASUREMENT SUMMARY 14

FILE NAME: ICOM-470Q IC-M85 BP-290 FA-SC58V MBB-3 HM-222 155MHZ BODY.DA52:0 15
FILE NAME: ICOM-470Q IC-M85 BP-290 FA-SC58V MB-136 HM-222 155MHZ BODY.DA52:0 16
FILE NAME: ICOM-470Q IC-M85 BP-290 FA-SC58V MBB-3 MB-96F HM-222 155MHZ BODY.DA52:0 17
FILE NAME: ICOM-470Q IC-M85 BP-290 FA-SC58V MBB-3 MB-96N HM-222 155MHZ BODY.DA52:0 18
FILE NAME: ICOM-470Q IC-M85 BP-290 FA-SC58V LC-188 HM-222 155MHZ BODY 2.DA52:0 19
FILE NAME: ICOM-470Q IC-M85 BP-290 FA-SC58V LC-188 HM-236 155MHZ BODY.DA52:0 20
FILE NAME: ICOM-470Q IC-M85 BP-290 FA-SC58V LC-188 HM-163 155MHZ BODY.DA52:0 21
FILE NAME: ICOM-470Q IC-M85 BP-290 FA-SC58V LC-188 AD-135 SP-29 155MHZ BODY.DA52:0 22

EXHIBIT 4. BODY MEASUREMENT SUMMARY 23

FILE NAME: ICOM-470Q IC-M85 BP-290 FA-SC58V LC-188 HM-222 136MHZ BODY.DA52:0 24
FILE NAME: ICOM-470Q IC-M85 BP-290 FA-SC58V LC-188 HM-222 142MHZ BODY.DA52:0 25
FILE NAME: ICOM-470Q IC-M85 BP-290 FA-SC58V LC-188 HM-222 149MHZ BODY.DA52:0 26
FILE NAME: ICOM-470Q IC-M85 BP-290 FA-SC58V LC-188 HM-222 155MHZ BODY 2.DA52:0 27
FILE NAME: ICOM-470Q IC-M85 BP-290 FA-SC58V LC-188 HM-222 161MHZ BODY.DA52:0 28
FILE NAME: ICOM-470Q IC-M85 BP-290 FA-SC58V LC-188 HM-222 168MHZ BODY.DA52:0 29
FILE NAME: ICOM-470Q IC-M85 BP-290 FA-SC58V LC-188 HM-222 174MHZ BODY.DA52:0 30

EXHIBIT 1. PRESCAN HEAD MEASUREMENT SUMMARY

FA-SC58V 136-174 MHz	Power (W)	CH	Freq	Head					
				SAR_{1g}	SAR_{10g}	Drift	Drift	SAR_{1g}	SAR_{10g}
			(MHz)	(W/Kg)	(W/Kg)	(dB)	Scaling	(W/Kg)	(W/Kg)
BP-290 2010mAH	5.08	4	155	1.55	1.17	-0.25	1.06	1.64	1.24
BP-291 5xAA Alkaline				0.30	0.23	-1.65	1.46	0.44	0.33

Test Laboratory: Ultratech Group of Labs

FILE NAME: ICOM-470Q IC-M85 BP-290 FA-SC58V 155MHZ HEAD.DA52:0

DUT: ICOM IC-M85; Type: VHF Transceiver; Serial: 00000001

Communication System: UID 10000, CW; Frequency: 155 MHz; Duty Cycle: 1:1
Medium parameters used (interpolated): f = 155 MHz; σ = 0.79 S/m; ε_r = 51.034; ρ = 1000 kg/m^3 ;
Phantom section: Flat Section ; Measurement Standard: DASY5 (IEEE/IEC/ANSI C63.19-2007)

DASY Configuration:

- Probe: EX3DV4 - SN3673; ConvF(11.15, 11.15, 11.15); Calibrated: 3/20/2017;
- Sensor-Surface: 3mm (Mechanical Surface Detection)
- Electronics: DAE4 Sn874; Calibrated: 8/21/2017
- Phantom: ELI 4.0; Type: QD OVA 001 BB; Serial: 1057
- DASY52 52.10.0(1446); SEMCAD X 14.6.10(7417)

ICOM IC-M85 5W - Head 25mm Front FA-SC58V BP-290/IC-M85/Zoom Scan (7x7x7) (7x7x7)/Cube 0: Measurement grid: dx=5mm, dy=5mm, dz=5mm
Reference Value = 43.87 V/m; Power Drift = -0.25 dB
Peak SAR (extrapolated) = 2.08 W/kg
SAR(1 g) = 1.55 W/kg; SAR(10 g) = 1.17 W/kg (SAR corrected for target medium)
ICOM IC-M85 5W - Head 25mm Front FA-SC58V BP-290/IC-M85/Area Scan (51x161x1): Interpolated grid: dx=1.500 mm, dy=1.500 mm

Maximum value of SAR (interpolated) = 1.76 W/kg

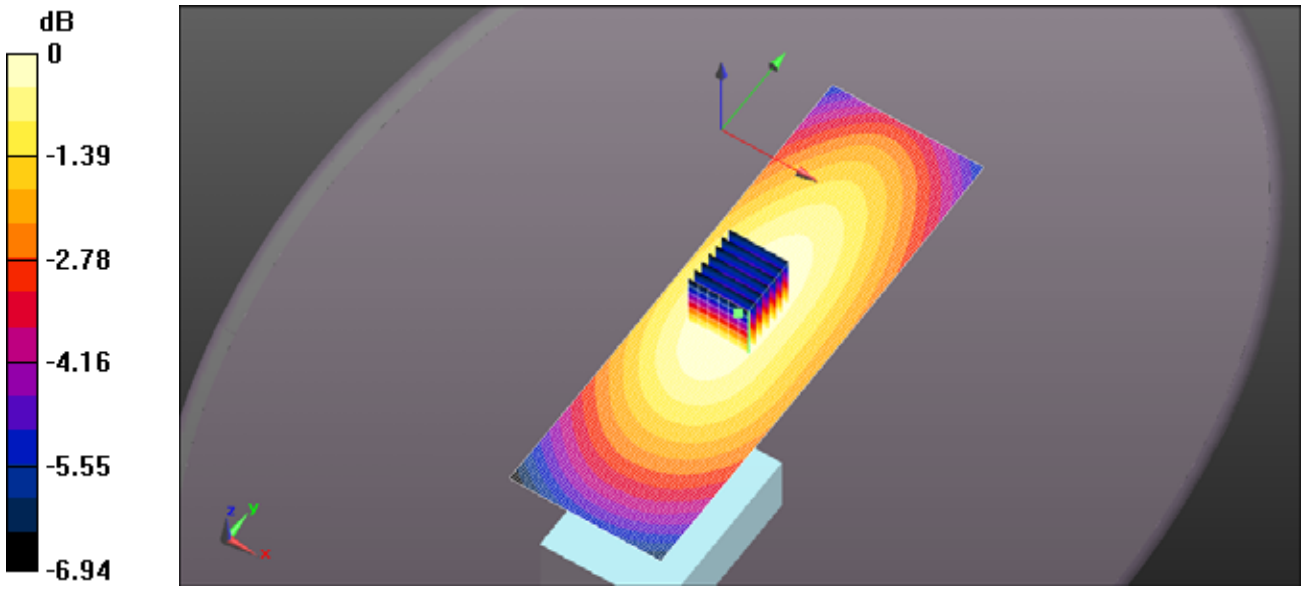

0 dB = 1.72 W/kg = 2.36 dBW/kg

Test Laboratory: Ultratech Group of Labs

FILE NAME: ICOM-470Q IC-M85 BP-291 FA-SC58V 155MHZ HEAD.DA52:0

DUT: ICOM IC-M85; Type: VHF Transceiver; Serial: 00000001

Communication System: UID 10000, CW; Frequency: 155 MHz; Duty Cycle: 1:1
Medium parameters used (interpolated): f = 155 MHz; σ = 0.79 S/m; ε_r = 51.034; ρ = 1000 kg/m^3 ;
Phantom section: Flat Section ; Measurement Standard: DASY5 (IEEE/IEC/ANSI C63.19-2007)

DASY Configuration:

- Probe: EX3DV4 - SN3673; ConvF(11.15, 11.15, 11.15); Calibrated: 3/20/2017;
- Sensor-Surface: 3mm (Mechanical Surface Detection)
- Electronics: DAE4 Sn874; Calibrated: 8/21/2017
- Phantom: ELI 4.0; Type: QD OVA 001 BB; Serial: 1057
- DASY52 52.10.0(1446); SEMCAD X 14.6.10(7417)

ICOM IC-M85 5W - Head 25mm Front FA-SC58V BP-290/IC-M85/Zoom Scan (7x7x7) (7x7x7)/Cube 0:

Measurement grid: dx=5mm, dy=5mm, dz=5mm
Reference Value = 22.25 V/m; Power Drift = -1.65 dB
Peak SAR (extrapolated) = 0.410 W/kg
SAR(1 g) = 0.304 W/kg; SAR(10 g) = 0.229 W/kg (SAR corrected for target medium)
Maximum value of SAR (measured) = 0.338 W/kg

ICOM IC-M85 5W - Head 25mm Front FA-SC58V BP-290/IC-M85/Area Scan (51x161x1):

Interpolated grid: dx=1.500 mm, dy=1.500 mm
Maximum value of SAR (interpolated) = 0.382 W/kg

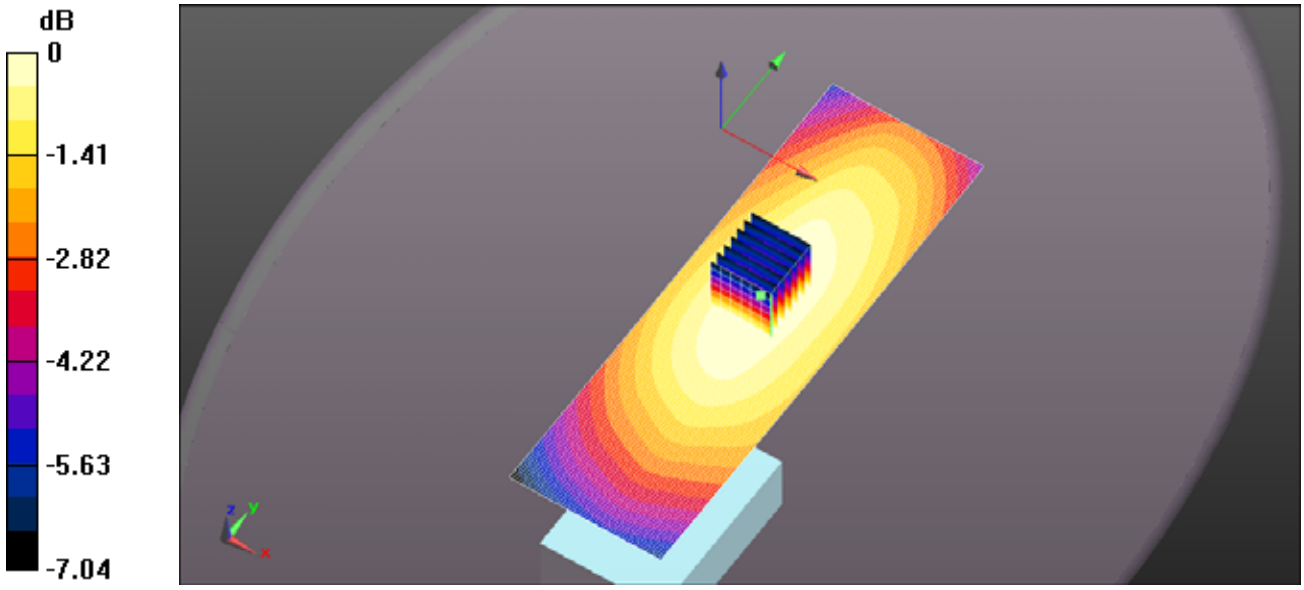

0 dB = 0.338 W/kg = -4.71 dBW/kg

EXHIBIT 2. MEASUREMENT SUMMARY

Configuration	Power (W)	CH	CH. Freq	Head					
				SAR_{1g}	SAR_{10g}	Drift	Drift	SAR_{1g}	SAR_{10g}
			(MHz)	(W/Kg)	(W/Kg)	(dB)	Scaling	(W/Kg)	(W/Kg)
FA-SC58V BP-290	5.01	1	136	0.27	0.20	-1.29	1.35	0.36	0.27
	5.04	2	142	0.39	0.29	-0.03	1.01	0.39	0.30
	5.06	3	149	0.71	0.54	0.04	0.99	0.70	0.53
	5.08	4	155	1.55	1.17	-0.25	1.06	1.64	1.24
	5.02	5	161	1.45	1.10	-1.06	1.28	1.85	1.40
	5.08	6	168	1.67	1.26	-0.63	1.16	1.93	1.46
	5.12	7	174	0.82	0.62	-1.17	1.31	1.08	0.81

Test Laboratory: Ultratech Group of Labs

FILE NAME: ICOM-470Q IC-M85 BP-290 FA-SC58V 136MHZ HEAD 1.DA52:0

DUT: ICOM IC-M85; Type: VHF Transceiver; Serial: 00000001

Communication System: UID 10000, CW; Frequency: 136 MHz; Duty Cycle: 1:1
Medium parameters used: f = 136 MHz; σ = 0.811 S/m; ε_r = 54.717; ρ = 1000 kg/m^3 ; Phantom section: Flat Section ; Measurement Standard: DASY5 (IEEE/IEC/ANSI C63.19-2007)

DASY Configuration:

- Probe: EX3DV4 - SN3673; ConvF(11.15, 11.15, 11.15); Calibrated: 3/20/2017;
- Sensor-Surface: 3mm (Mechanical Surface Detection)
- Electronics: DAE4 Sn874; Calibrated: 8/21/2017
- Phantom: ELI 4.0; Type: QD OVA 001 BB; Serial: 1057
- DASY52 52.10.0(1446); SEMCAD X 14.6.10(7417)

ICOM IC-M85 5W - Head 25mm Front FA-SC58V BP-290/IC-M85/Zoom Scan (7x7x7) (7x7x7)/Cube 0:

Measurement grid: dx=5mm, dy=5mm, dz=5mm
Reference Value = 19.65 V/m; Power Drift = -1.29 dB
Peak SAR (extrapolated) = 0.346 W/kg
SAR(1 g) = 0.260 W/kg; SAR(10 g) = 0.198 W/kg (SAR corrected for target medium)
Maximum value of SAR (measured) = 0.287 W/kg

ICOM IC-M85 5W - Head 25mm Front FA-SC58V BP-290/IC-M85/Area Scan (51x161x1):

Interpolated grid: dx=1.500 mm, dy=1.500 mm
Maximum value of SAR (interpolated) = 0.295 W/kg

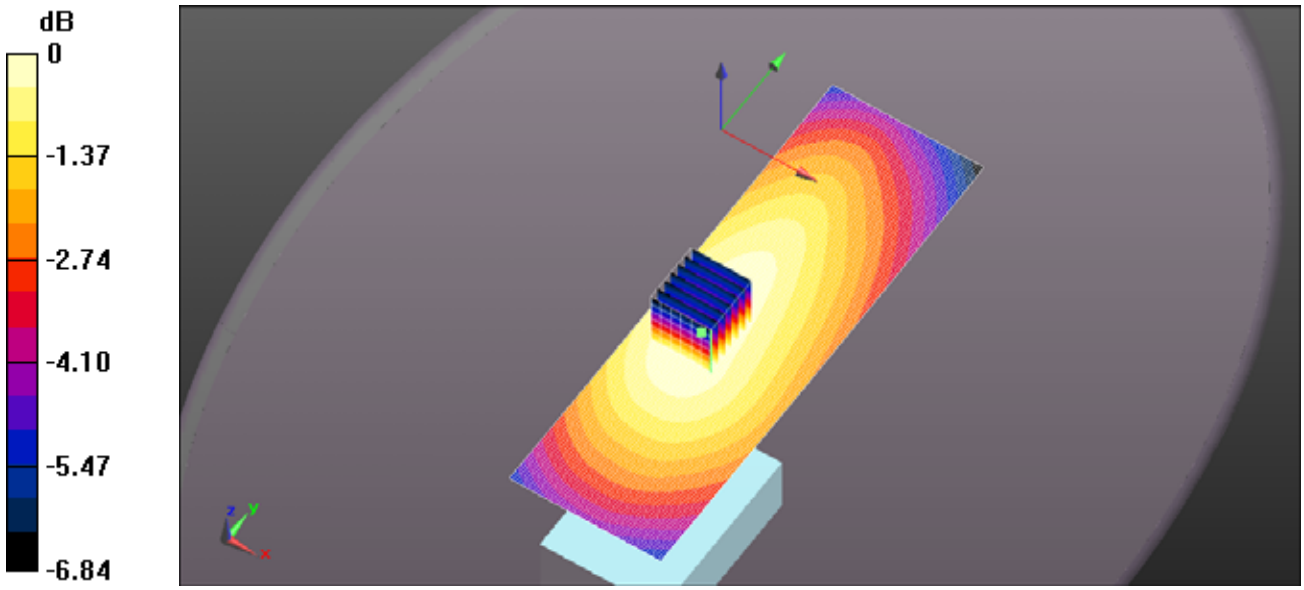

0 dB = 0.287 W/kg = -5.41 dBW/kg

Test Laboratory: Ultratech Group of Labs

FILE NAME: ICOM-470Q IC-M85 BP-290 FA-SC58V 142MHZ HEAD.DA52:0

DUT: ICOM IC-M85; Type: VHF Transceiver; Serial: 00000001

Communication System: UID 10000, CW; Frequency: 142 MHz; Duty Cycle: 1:1
Medium parameters used: f = 142 MHz; σ = 0.805 S/m; ε_r = 53.642; ρ = 1000 kg/m^3 ; Phantom section: Flat Section ; Measurement Standard: DASY5 (IEEE/IEC/ANSI C63.19-2007)

DASY Configuration:

- Probe: EX3DV4 - SN3673; ConvF(11.15, 11.15, 11.15); Calibrated: 3/20/2017;
- Sensor-Surface: 3mm (Mechanical Surface Detection)
- Electronics: DAE4 Sn874; Calibrated: 8/21/2017
- Phantom: ELI 4.0; Type: QD OVA 001 BB; Serial: 1057
- DASY52 52.10.0(1446); SEMCAD X 14.6.10(7417)

ICOM IC-M85 5W - Head 25mm Front FA-SC58V BP-290/IC-M85/Zoom Scan (7x7x7) (7x7x7)/Cube 0:

Measurement grid: dx=5mm, dy=5mm, dz=5mm
Reference Value = 20.77 V/m; Power Drift = -0.03 dB
Peak SAR (extrapolated) = 0.513 W/kg
SAR(1 g) = 0.386 W/kg; SAR(10 g) = 0.294 W/kg (SAR corrected for target medium)
Maximum value of SAR (measured) = 0.428 W/kg

ICOM IC-M85 5W - Head 25mm Front FA-SC58V BP-290/IC-M85/Area Scan (51x161x1):

Interpolated grid: dx=1.500 mm, dy=1.500 mm
Maximum value of SAR (interpolated) = 0.429 W/kg

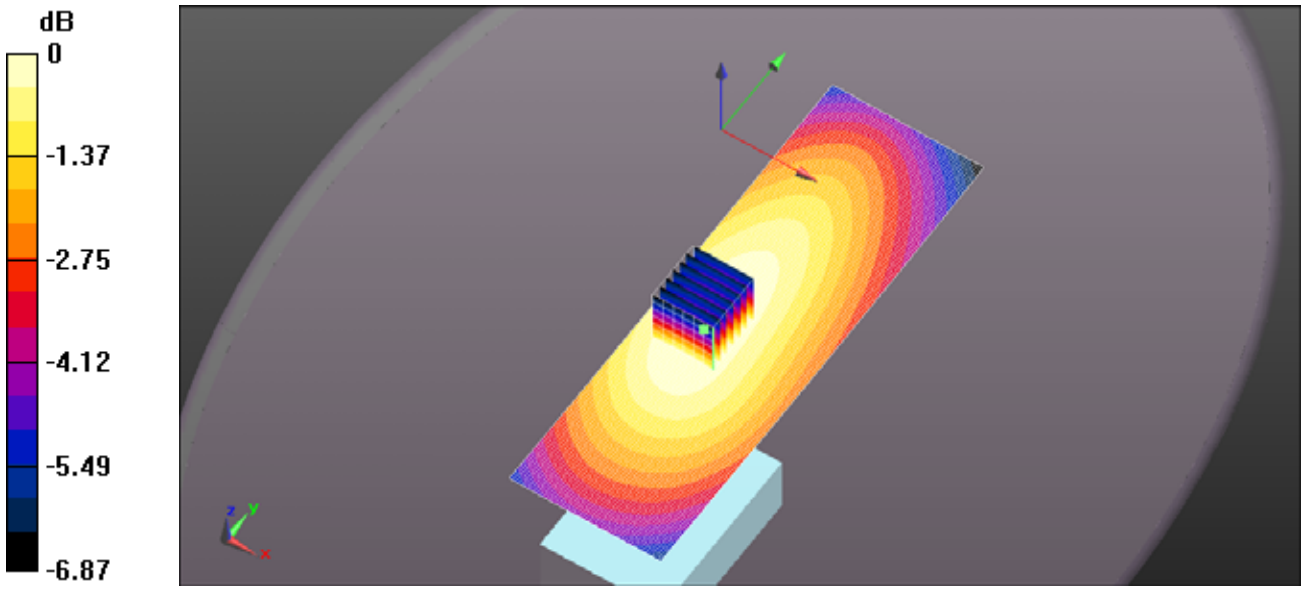

0 dB = 0.428 W/kg = -3.69 dBW/kg

Test Laboratory: Ultratech Group of Labs

FILE NAME: ICOM-470Q IC-M85 BP-290 FA-SC58V 149MHZ HEAD.DA52:0

DUT: ICOM IC-M85; Type: VHF Transceiver; Serial: 00000001

Communication System: UID 10000, CW; Frequency: 149 MHz; Duty Cycle: 1:1
Medium parameters used (interpolated): f = 149 MHz; σ = 0.798 S/m; ε_r = 52.429; ρ = 1000 kg/m^3 ;
Phantom section: Flat Section ; Measurement Standard: DASY5 (IEEE/IEC/ANSI C63.19-2007)

DASY Configuration:

- Probe: EX3DV4 - SN3673; ConvF(11.15, 11.15, 11.15); Calibrated: 3/20/2017;
- Sensor-Surface: 3mm (Mechanical Surface Detection)
- Electronics: DAE4 Sn874; Calibrated: 8/21/2017
- Phantom: ELI 4.0; Type: QD OVA 001 BB; Serial: 1057
- DASY52 52.10.0(1446); SEMCAD X 14.6.10(7417)

ICOM IC-M85 5W - Head 25mm Front FA-SC58V BP-290/IC-M85/Zoom Scan (7x7x7) (7x7x7)/Cube 0:

Measurement grid: dx=5mm, dy=5mm, dz=5mm
Reference Value = 27.94 V/m; Power Drift = 0.04 dB
Peak SAR (extrapolated) = 0.991 W/kg
SAR(1 g) = 0.710 W/kg; SAR(10 g) = 0.539 W/kg (SAR corrected for target medium)
Maximum value of SAR (measured) = 0.820 W/kg

ICOM IC-M85 5W - Head 25mm Front FA-SC58V BP-290/IC-M85/Area Scan (51x161x1):

Interpolated grid: dx=1.500 mm, dy=1.500 mm
Maximum value of SAR (interpolated) = 0.818 W/kg

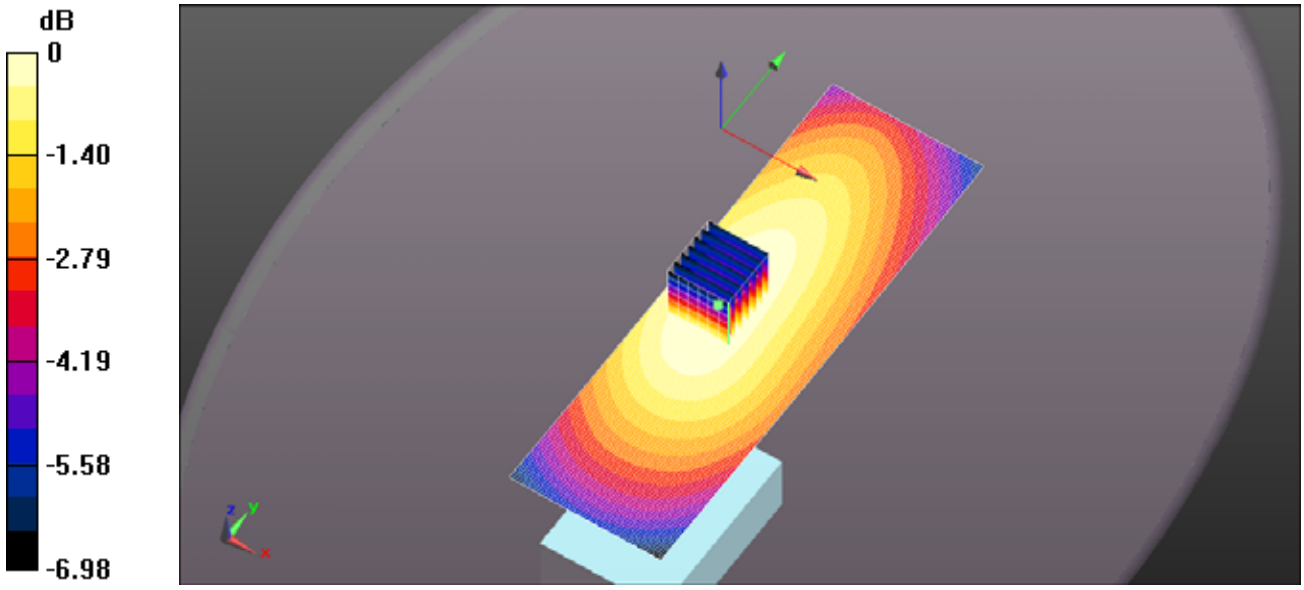

0 dB = 0.820 W/kg = -0.86 dBW/kg

Test Laboratory: Ultratech Group of Labs

FILE NAME: ICOM-470Q IC-M85 BP-290 FA-SC58V 155MHZ HEAD.DA52:0

DUT: ICOM IC-M85; Type: VHF Transceiver; Serial: 00000001

Communication System: UID 10000, CW; Frequency: 155 MHz; Duty Cycle: 1:1
Medium parameters used (interpolated): f = 155 MHz; σ = 0.79 S/m; ε_r = 51.034; ρ = 1000 kg/m^3 ;
Phantom section: Flat Section ; Measurement Standard: DASY5 (IEEE/IEC/ANSI C63.19-2007)

DASY Configuration:

- Probe: EX3DV4 - SN3673; ConvF(11.15, 11.15, 11.15); Calibrated: 3/20/2017;
- Sensor-Surface: 3mm (Mechanical Surface Detection)
- Electronics: DAE4 Sn874; Calibrated: 8/21/2017
- Phantom: ELI 4.0; Type: QD OVA 001 BB; Serial: 1057
- DASY52 52.10.0(1446); SEMCAD X 14.6.10(7417)

ICOM IC-M85 5W - Head 25mm Front FA-SC58V BP-290/IC-M85/Zoom Scan (7x7x7) (7x7x7)/Cube 0: Measurement grid: dx=5mm, dy=5mm, dz=5mm
Reference Value = 43.87 V/m; Power Drift = -0.25 dB
Peak SAR (extrapolated) = 2.08 W/kg
SAR(1 g) = 1.55 W/kg; SAR(10 g) = 1.17 W/kg (SAR corrected for target medium)
ICOM IC-M85 5W - Head 25mm Front FA-SC58V BP-290/IC-M85/Area Scan (51x161x1): Interpolated grid: dx=1.500 mm, dy=1.500 mm

Maximum value of SAR (interpolated) = 1.76 W/kg

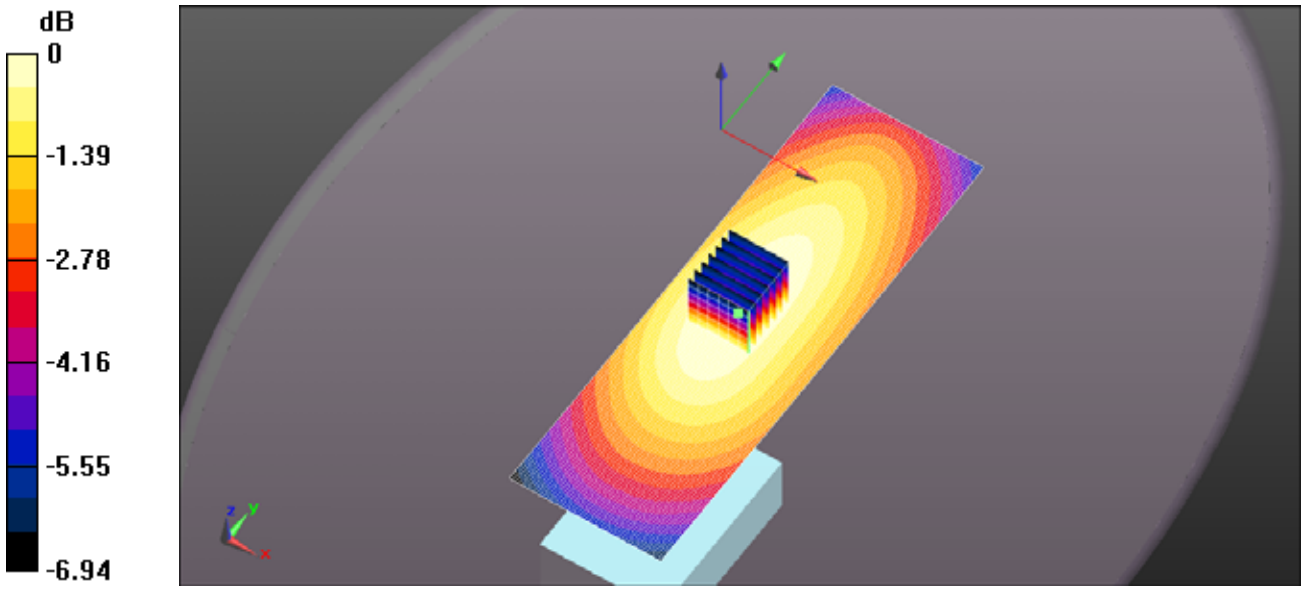

0 dB = 1.72 W/kg = 2.36 dBW/kg

Test Laboratory: Ultratech Group of Labs

FILE NAME: ICOM-470Q IC-M85 BP-290 FA-SC58V 161MHZ HEAD.DA52:0

DUT: ICOM IC-M85; Type: VHF Transceiver; Serial: 00000001

Communication System: UID 10000, CW; Frequency: 161 MHz; Duty Cycle: 1:1
Medium parameters used (interpolated): f = 161 MHz; σ = 0.785 S/m; ε_r = 50.374; ρ = 1000 kg/m^3 ;
Phantom section: Flat Section ; Measurement Standard: DASY5 (IEEE/IEC/ANSI C63.19-2007)

DASY Configuration:

- Probe: EX3DV4 - SN3673; ConvF(11.15, 11.15, 11.15); Calibrated: 3/20/2017;
- Sensor-Surface: 3mm (Mechanical Surface Detection)
- Electronics: DAE4 Sn874; Calibrated: 8/21/2017
- Phantom: ELI 4.0; Type: QD OVA 001 BB; Serial: 1057
- DASY52 52.10.0(1446); SEMCAD X 14.6.10(7417)

ICOM IC-M85 5W - Head 25mm Front FA-SC58V BP-290/IC-M85/Zoom Scan (7x7x7) (7x7x7)/Cube 0:

Measurement grid: dx=5mm, dy=5mm, dz=5mm
Reference Value = 43.90 V/m; Power Drift = -1.06 dB
Peak SAR (extrapolated) = 1.95 W/kg
SAR(1 g) = 1.45 W/kg; SAR(10 g) = 1.1 W/kg (SAR corrected for target medium)
Maximum value of SAR (measured) = 1.61 W/kg

ICOM IC-M85 5W - Head 25mm Front FA-SC58V BP-290/IC-M85/Area Scan (51x161x1):

Interpolated grid: dx=1.500 mm, dy=1.500 mm
Maximum value of SAR (interpolated) = 1.62 W/kg

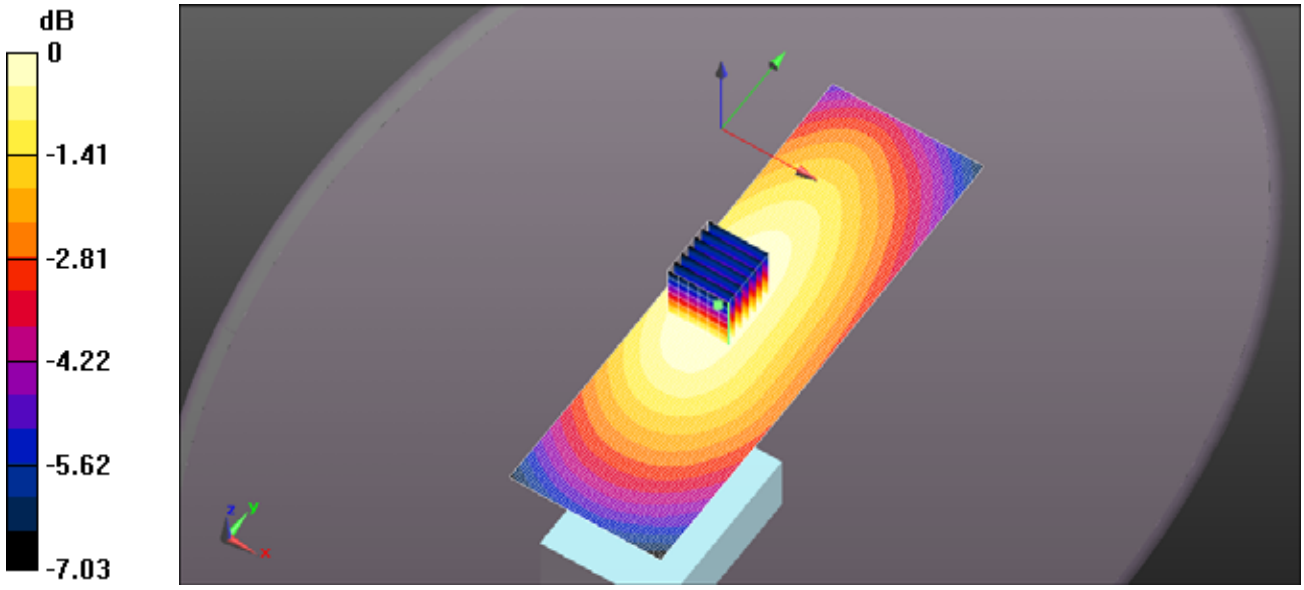

0 dB = 1.61 W/kg = 2.08 dBW/kg

Test Laboratory: Ultratech Group of Labs

FILE NAME: ICOM-470Q IC-M85 BP-290 FA-SC58V 168MHZ HEAD.DA52:0

DUT: ICOM IC-M85; Type: VHF Transceiver; Serial: 00000001

Communication System: UID 10000, CW; Frequency: 168 MHz; Duty Cycle: 1:1
Medium parameters used: f = 168 MHz; σ = 0.781 S/m; ε_r = 49.691; ρ = 1000 kg/m^3 ; Phantom section: Flat Section ; Measurement Standard: DASY5 (IEEE/IEC/ANSI C63.19-2007)

DASY Configuration:

- Probe: EX3DV4 - SN3673; ConvF(11.15, 11.15, 11.15); Calibrated: 3/20/2017;
- Sensor-Surface: 3mm (Mechanical Surface Detection)
- Electronics: DAE4 Sn874; Calibrated: 8/21/2017
- Phantom: ELI 4.0; Type: QD OVA 001 BB; Serial: 1057
- DASY52 52.10.0(1446); SEMCAD X 14.6.10(7417)

ICOM IC-M85 5W - Head 25mm Front FA-SC58V BP-290/IC-M85/Zoom Scan (7x7x7) (7x7x7)/Cube 0:

Measurement grid: dx=5mm, dy=5mm, dz=5mm
Reference Value = 43.53 V/m; Power Drift = -0.63 dB
Peak SAR (extrapolated) = 2.25 W/kg
SAR(1 g) = 1.67 W/kg; SAR(10 g) = 1.26 W/kg (SAR corrected for target medium)
Maximum value of SAR (measured) = 1.86 W/kg

ICOM IC-M85 5W - Head 25mm Front FA-SC58V BP-290/IC-M85/Area Scan (51x161x1):

Interpolated grid: dx=1.500 mm, dy=1.500 mm
Maximum value of SAR (interpolated) = 1.84 W/kg

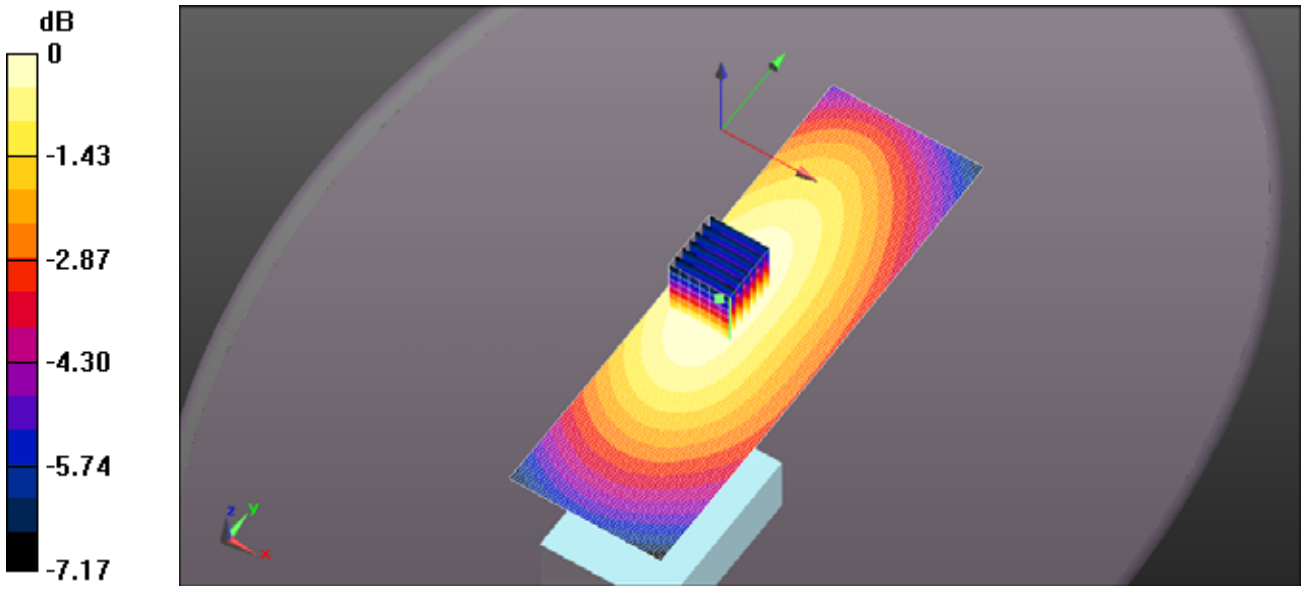

0 dB = 1.86 W/kg = 2.69 dBW/kg

Test Laboratory: Ultratech Group of Labs

FILE NAME: ICOM-470Q IC-M85 BP-290 FA-SC58V 174MHZ HEAD.DA52:0

DUT: ICOM IC-M85; Type: VHF Transceiver; Serial: 00000001

Communication System: UID 10000, CW; Frequency: 174 MHz; Duty Cycle: 1:1
Medium parameters used: f = 174 MHz; σ = 0.784 S/m; ε_r = 48.991; ρ = 1000 kg/m^3 ; Phantom section: Flat Section ; Measurement Standard: DASY5 (IEEE/IEC/ANSI C63.19-2007)

DASY Configuration:

- Probe: EX3DV4 - SN3673; ConvF(11.15, 11.15, 11.15); Calibrated: 3/20/2017;
- Sensor-Surface: 3mm (Mechanical Surface Detection)
- Electronics: DAE4 Sn874; Calibrated: 8/21/2017
- Phantom: ELI 4.0; Type: QD OVA 001 BB; Serial: 1057
- DASY52 52.10.0(1446); SEMCAD X 14.6.10(7417)

ICOM IC-M85 5W - Head 25mm Front FA-SC58V BP-290/IC-M85/Zoom Scan (7x7x7) (7x7x7)/Cube 0:

Measurement grid: dx=5mm, dy=5mm, dz=5mm
Reference Value = 32.46 V/m; Power Drift = -1.17 dB
Peak SAR (extrapolated) = 1.11 W/kg
SAR(1 g) = 0.824 W/kg; SAR(10 g) = 0.619 W/kg (SAR corrected for target medium)
Maximum value of SAR (measured) = 0.916 W/kg

ICOM IC-M85 5W - Head 25mm Front FA-SC58V BP-290/IC-M85/Area Scan (51x161x1):

Interpolated grid: dx=1.500 mm, dy=1.500 mm
Maximum value of SAR (interpolated) = 0.926 W/kg

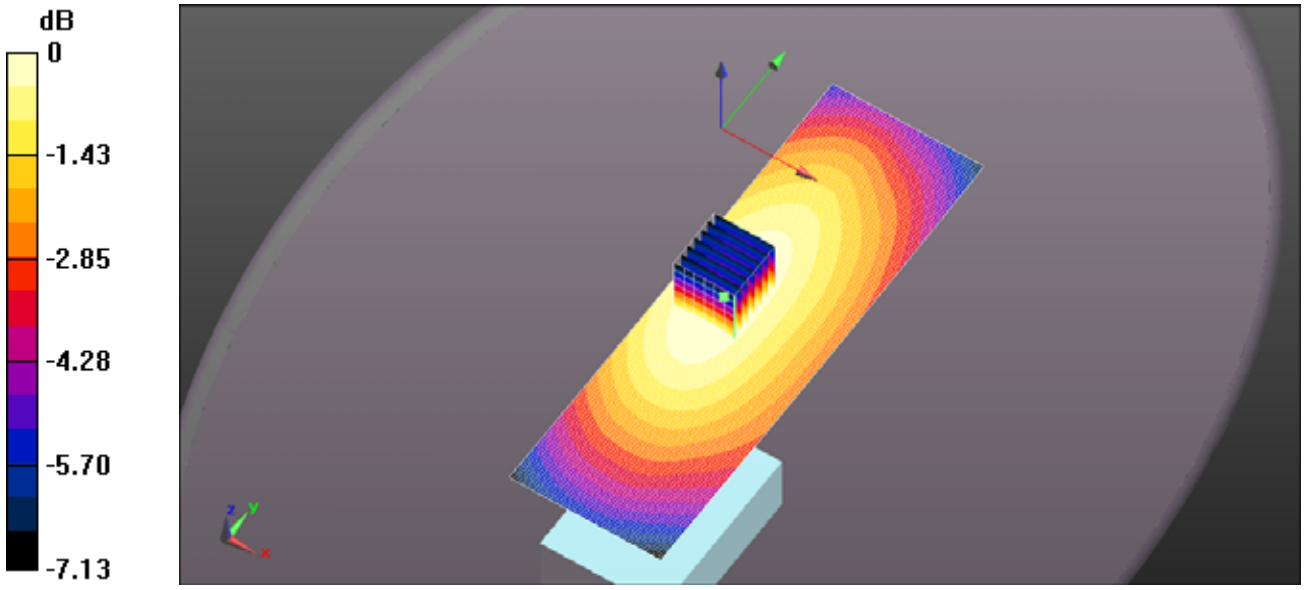

0 dB = 0.916 W/kg = -0.38 dBW/kg

EXHIBIT 3. PRESCAN BODY MEASUREMENT SUMMARY

FA-SC58V, BP-290, HM-222	Power (W)	CH	Freq	Body					
				SAR_{1g}	SAR_{10g}	Drift	Drift	SAR_{1g}	SAR_{10g}
			(MHz)	(W/Kg)	(W/Kg)	(dB)	Scaling	(W/Kg)	(W/Kg)
MBB-3 Belt Clip	5.08	4	155	0.78	0.54	-0.03	1.01	0.78	0.54
MB-136 Belt Clip				0.26	0.21	-0.3	1.07	0.28	0.22

FA-SC58V, BP-290, HM-222	Power (W)	CH	Freq	Body					
				SAR_{1g}	SAR_{10g}	Drift	Drift	SAR_{1g}	SAR_{10g}
			(MHz)	(W/Kg)	(W/Kg)	(dB)	Scaling	(W/Kg)	(W/Kg)
LC-188 Case	5.08	4	155	4.89	1.54	-0.15	1.04	5.06	1.59
LC-187 Case MB-136 Belt Clip				0.26	0.23	-0.3	1.07	0.28	0.25

FA-SC58V, BP-290, MBB-3	Power (W)	CH	Freq	Body					
				SAR_{1g}	SAR_{10g}	Drift	Drift	SAR_{1g}	SAR_{10g}
			(MHz)	(W/Kg)	(W/Kg)	(dB)	Scaling	(W/Kg)	(W/Kg)
MB-96F Belt Hanger	5.08	4	155	0.47	0.36	-0.35	1.08	0.51	0.39
MB-96FL Belt Hanger				0.35	0.26	-0.44	1.11	0.39	0.29
MB-96N Belt Hanger				0.20	0.16	-0.08	1.02	0.20	0.16

FA-SC58V, BP-290, LC-188	Power (W)	CH	Freq	Body					
				SAR_{1g}	SAR_{10g}	Drift	Drift	SAR_{1g}	SAR_{10g}
			(MHz)	(W/Kg)	(W/Kg)	(dB)	Scaling	(W/Kg)	(W/Kg)
HM-222 Hand Microphone	5.08	4	155	4.9	1.5	-0.15	1.04	5.06	1.59
HM-236 Hand Microphone				3.8	1.1	-0.52	1.13	4.32	1.24
HS-94 Head Set, VS-5MC									
*HS-95 Head Set, VS-5MC				3.3	1.1	-0.67	1.17	3.86	1.25
HS-97 Head Set, VS-5MC									
EH-15B, HM-163MC									
*SP-26, HM-163MC				4.1	1.3	-0.4	1.10	4.50	1.47
SP-28, HM-163MC									
SP-40, AD-135									
SP-27, AD-135									
*SP-29, AD-135,				3.9	1.3	-0.51	1.12	4.39	1.42
SP-32, EH-15, SP-40, AD-135									

The above accessory grouping are based on the connector adapter used in direct contact with the EUT body.
*The largest accessory was selected to represent the grouping as the same adapter is used for each accessory in the grouping. The final Body SAR measurements will be carried out using the BP-290, LC-188 and HM-222 accessories.

Test Laboratory: Ultratech Group of Labs

FILE NAME: ICOM-470Q IC-M85 BP-290 FA-SC58V MBB-3 HM-222 155MHZ BODY.DA52:0

DUT: ICOM IC-M85; Type: VHF Transceiver; Serial: 00000001

Communication System: UID 10000, CW; Frequency: 155 MHz; Duty Cycle: 1:1
Medium parameters used (interpolated): f = 155 MHz; σ = 0.831 S/m; ε_r = 61.442; ρ = 1000 kg/m^3 ;
Phantom section: Flat Section ; Measurement Standard: DASY5 (IEEE/IEC/ANSI C63.19-2007)

DASY Configuration:

- Probe: EX3DV4 - SN3673; ConvF(10.93, 10.93, 10.93); Calibrated: 3/20/2017;
- Sensor-Surface: 3mm (Mechanical Surface Detection)
- Electronics: DAE4 Sn874; Calibrated: 8/21/2017
- Phantom: ELI 4.0; Type: QD OVA 001 BB; Serial: 1057
- DASY52 52.10.0(1446); SEMCAD X 14.6.10(7417)

ICOM IC-M85 5W - Body 0mm Back FA-SC58V BP-290 MBB-3 HM-222/IC-M85/Zoom Scan (7x7x7) (7x7x7)/Cube 0: Measurement grid: dx=5mm, dy=5mm, dz=5mm
Reference Value = 30.08 V/m; Power Drift = -0.03 dB
Peak SAR (extrapolated) = 1.23 W/kg
SAR(1 g) = 0.770 W/kg; SAR(10 g) = 0.538 W/kg (SAR corrected for target medium)
Maximum value of SAR (measured) = 0.884 W/kg

ICOM IC-M85 5W - Body 0mm Back FA-SC58V BP-290 MBB-3 HM-222/IC-M85/Area Scan (51x161x1): Interpolated grid: dx=1.500 mm, dy=1.500 mm
Maximum value of SAR (interpolated) = 0.874 W/kg

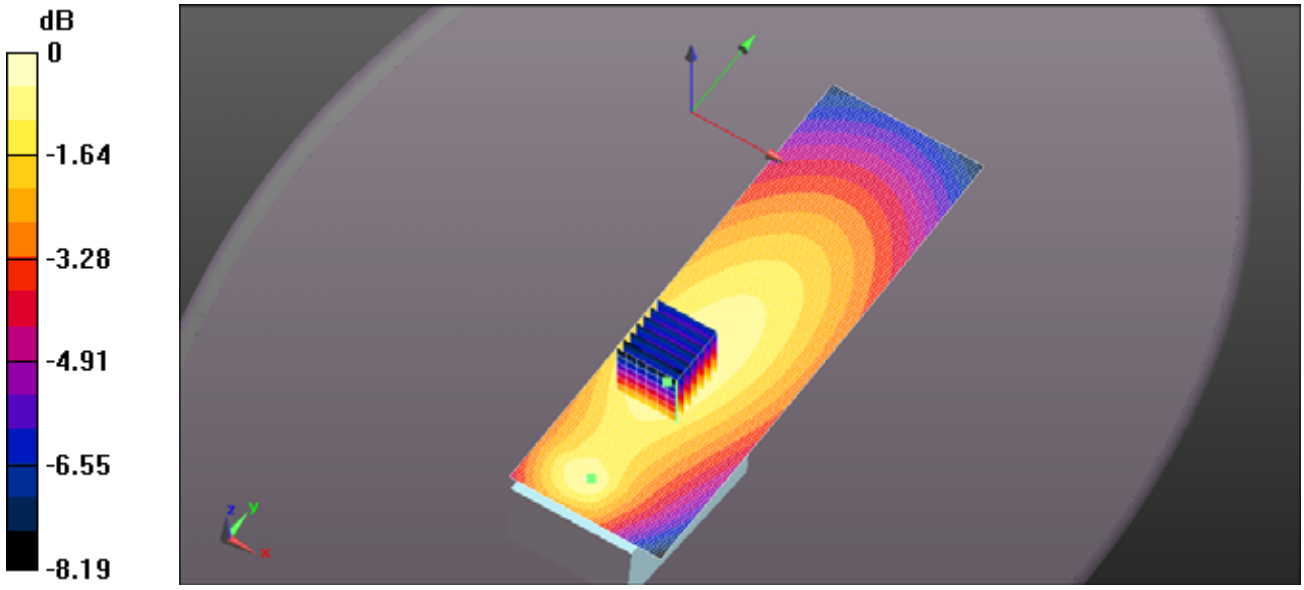

0 dB = 0.884 W/kg = -0.54 dBW/kg

Test Laboratory: Ultratech Group of Labs

FILE NAME: ICOM-470Q IC-M85 BP-290 FA-SC58V MB-136 HM-222 155MHZ BODY.DA52:0

DUT: ICOM IC-M85; Type: VHF Transceiver; Serial: 00000001

Communication System: UID 10000, CW; Frequency: 155 MHz; Duty Cycle: 1:1
Medium parameters used (interpolated): f = 155 MHz; σ = 0.831 S/m; ε_r = 61.442; ρ = 1000 kg/m^3 ;
Phantom section: Flat Section ; Measurement Standard: DASY5 (IEEE/IEC/ANSI C63.19-2007)

DASY Configuration:

- Probe: EX3DV4 - SN3673; ConvF(10.93, 10.93, 10.93); Calibrated: 3/20/2017;
- Sensor-Surface: 3mm (Mechanical Surface Detection)
- Electronics: DAE4 Sn874; Calibrated: 8/21/2017
- Phantom: ELI 4.0; Type: QD OVA 001 BB; Serial: 1057
- DASY52 52.10.0(1446); SEMCAD X 14.6.10(7417)

ICOM IC-M85 5W - Body 0mm Back FA-SC58V BP-290 MB-136 HM-222/IC-M85/Zoom Scan (7x7x7) (7x7x7)/Cube 0: Measurement grid: dx=5mm, dy=5mm, dz=5mm
Reference Value = 18.52 V/m; Power Drift = -0.30 dB
Peak SAR (extrapolated) = 0.342 W/kg
SAR(1 g) = 0.264 W/kg; SAR(10 g) = 0.205 W/kg (SAR corrected for target medium)
Maximum value of SAR (measured) = 0.289 W/kg

ICOM IC-M85 5W - Body 0mm Back FA-SC58V BP-290 MB-136 HM-222/IC-M85/Area Scan (51x161x1): Interpolated grid: dx=1.500 mm, dy=1.500 mm
Maximum value of SAR (interpolated) = 0.289 W/kg

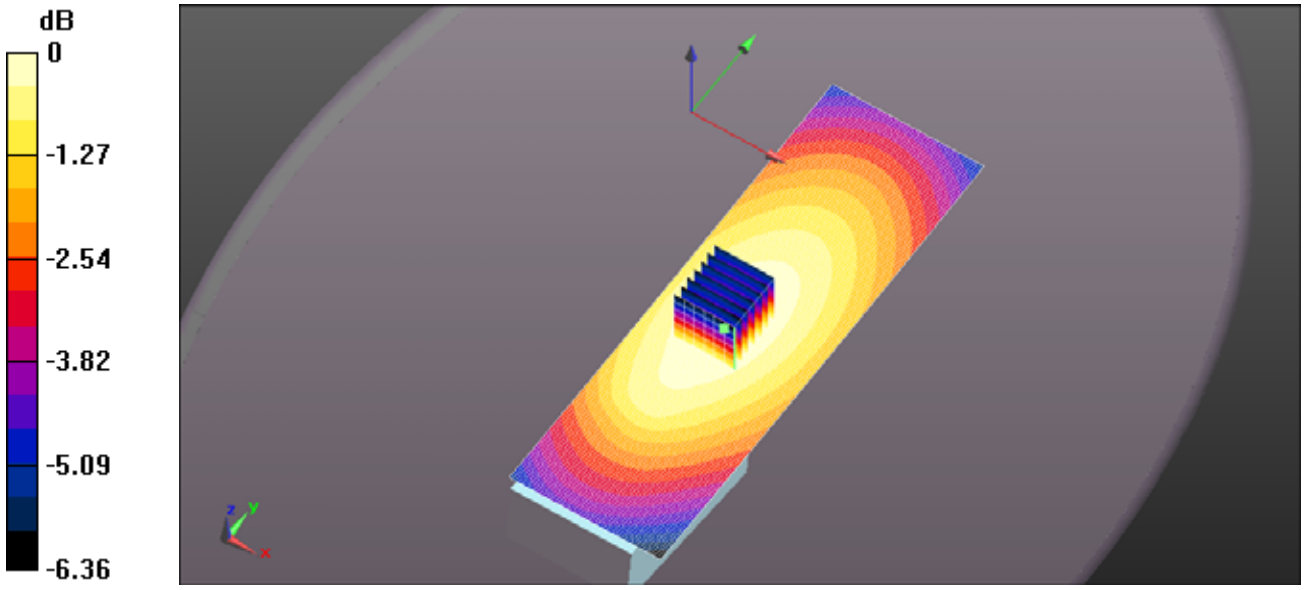

0 dB = 0.289 W/kg = -5.39 dBW/kg

Test Laboratory: Ultratech Group of Labs

FILE NAME: ICOM-470Q IC-M85 BP-290 FA-SC58V MBB-3 MB-96F HM-222 155MHZ BODY.DA52:0

DUT: ICOM IC-M85; Type: VHF Transceiver; Serial: 00000001

Communication System: UID 10000, CW; Frequency: 155 MHz; Duty Cycle: 1:1
Medium parameters used (interpolated): f = 155 MHz; σ = 0.831 S/m; ε_r = 61.442; ρ = 1000 kg/m^3 ;
Phantom section: Flat Section ; Measurement Standard: DASY5 (IEEE/IEC/ANSI C63.19-2007)

DASY Configuration:

- Probe: EX3DV4 - SN3673; ConvF(10.93, 10.93, 10.93); Calibrated: 3/20/2017;
- Sensor-Surface: 3mm (Mechanical Surface Detection)
- Electronics: DAE4 Sn874; Calibrated: 8/21/2017
- Phantom: ELI 4.0; Type: QD OVA 001 BB; Serial: 1057
- DASY52 52.10.0(1446); SEMCAD X 14.6.10(7417)

ICOM IC-M85 5W - Body 0mm Back FA-SC58V BP-290 MBB-3 MB-96F HM-222/IC-M85/Zoom Scan (7x7x7) (7x7x7)/Cube 0: Measurement grid: dx=5mm, dy=5mm, dz=5mm
Reference Value = 24.96 V/m; Power Drift = -0.35 dB
Peak SAR (extrapolated) = 0.605 W/kg
SAR(1 g) = 0.466 W/kg; SAR(10 g) = 0.362 W/kg (SAR corrected for target medium)
Maximum value of SAR (measured) = 0.513 W/kg

ICOM IC-M85 5W - Body 0mm Back FA-SC58V BP-290 MBB-3 MB-96F HM-222/IC-M85/Area Scan (51x161x1): Interpolated grid: dx=1.500 mm, dy=1.500 mm
Maximum value of SAR (interpolated) = 0.513 W/kg

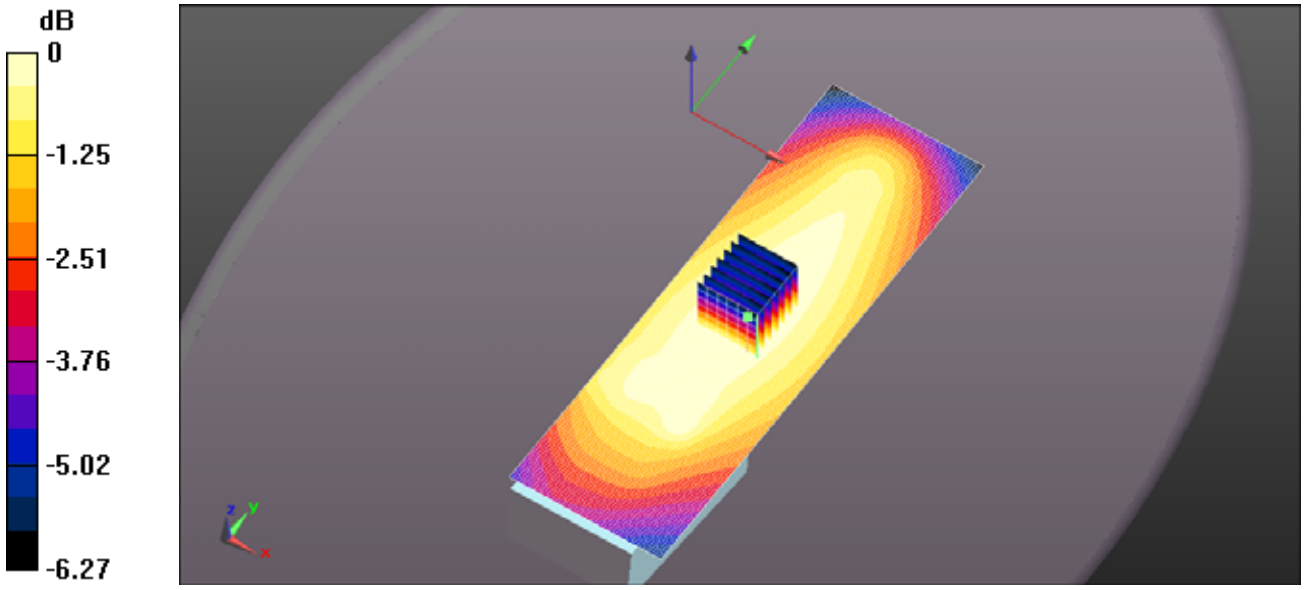

0 dB = 0.513 W/kg = -2.90 dBW/kg

Test Laboratory: Ultratech Group of Labs

FILE NAME: ICOM-470Q IC-M85 BP-290 FA-SC58V MBB-3 MB-96N HM-222 155MHZ BODY.DA52:0

DUT: ICOM IC-M85; Type: VHF Transceiver; Serial: 00000001

Communication System: UID 10000, CW; Frequency: 155 MHz; Duty Cycle: 1:1
Medium parameters used (interpolated): f = 155 MHz; σ = 0.831 S/m; ε_r = 61.442; ρ = 1000 kg/m^3 ;
Phantom section: Flat Section ; Measurement Standard: DASY5 (IEEE/IEC/ANSI C63.19-2007)

DASY Configuration:

- Probe: EX3DV4 - SN3673; ConvF(10.93, 10.93, 10.93); Calibrated: 3/20/2017;
- Sensor-Surface: 3mm (Mechanical Surface Detection)
- Electronics: DAE4 Sn874; Calibrated: 8/21/2017
- Phantom: ELI 4.0; Type: QD OVA 001 BB; Serial: 1057
- DASY52 52.10.0(1446); SEMCAD X 14.6.10(7417)

ICOM IC-M85 5W - Body 0mm Back FA-SC58V BP-290 MBB-3 MB-96N HM-222/IC-M85/Zoom Scan (7x7x7) (7x7x7)/Cube 0: Measurement grid: dx=5mm, dy=5mm, dz=5mm
Reference Value = 15.87 V/m; Power Drift = -0.08 dB
Peak SAR (extrapolated) = 0.252 W/kg
SAR(1 g) = 0.198 W/kg; SAR(10 g) = 0.156 W/kg (SAR corrected for target medium)
Maximum value of SAR (measured) = 0.216 W/kg

ICOM IC-M85 5W - Body 0mm Back FA-SC58V BP-290 MBB-3 MB-96N HM-222/IC-M85/Area Scan (51x161x1): Interpolated grid: dx=1.500 mm, dy=1.500 mm
Maximum value of SAR (interpolated) = 0.216 W/kg

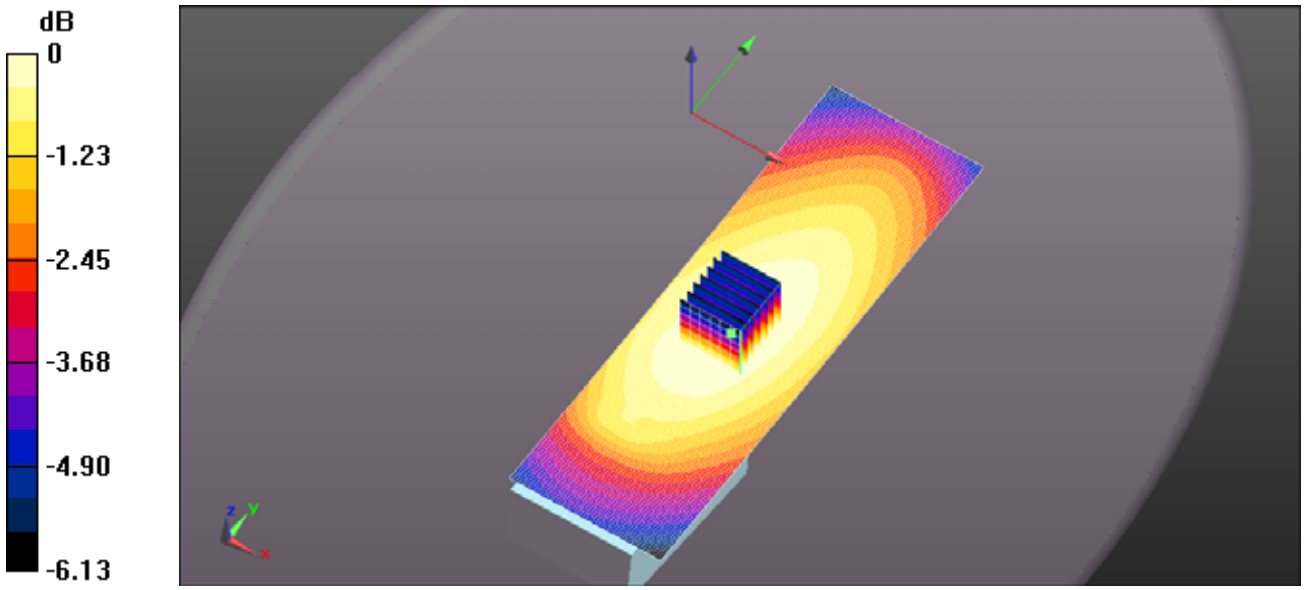

0 dB = 0.216 W/kg = -6.66 dBW/kg

Test Laboratory: Ultratech Group of Labs

FILE NAME: ICOM-470Q IC-M85 BP-290 FA-SC58V LC-188 HM-222 155MHZ BODY 2.DA52:0

DUT: ICOM IC-M85; Type: VHF Transceiver; Serial: 00000001

Communication System: UID 10000, CW; Frequency: 155 MHz; Duty Cycle: 1:1
Medium parameters used (interpolated): f = 155 MHz; σ = 0.831 S/m; ε_r = 61.442; ρ = 1000 kg/m^3 ;
Phantom section: Flat Section ; Measurement Standard: DASY5 (IEEE/IEC/ANSI C63.19-2007)

DASY Configuration:

- Probe: EX3DV4 - SN3673; ConvF(10.93, 10.93, 10.93); Calibrated: 3/20/2017;
- Sensor-Surface: 3mm (Mechanical Surface Detection)
- Electronics: DAE4 Sn874; Calibrated: 8/21/2017
- Phantom: ELI 4.0; Type: QD OVA 001 BB; Serial: 1057
- DASY52 52.10.0(1446); SEMCAD X 14.6.10(7417)

ICOM IC-M85 5W - Body 0mm Back FA-SC58V BP-290 LC-188 HM-222/IC-M85/Zoom Scan (7x7x7) (7x7x7)/Cube 0: Measurement grid: dx=5mm, dy=5mm, dz=5mm
Reference Value = 41.48 V/m; Power Drift = -0.15 dB
Peak SAR (extrapolated) = 30.5 W/kg
SAR(1 g) = 4.89 W/kg; SAR(10 g) = 1.54 W/kg (SAR corrected for target medium)
Maximum value of SAR (measured) = 6.33 W/kg

ICOM IC-M85 5W - Body 0mm Back FA-SC58V BP-290 LC-188 HM-222/IC-M85/Area Scan (51x161x1): Interpolated grid: dx=1.500 mm, dy=1.500 mm
Maximum value of SAR (interpolated) = 4.83 W/kg

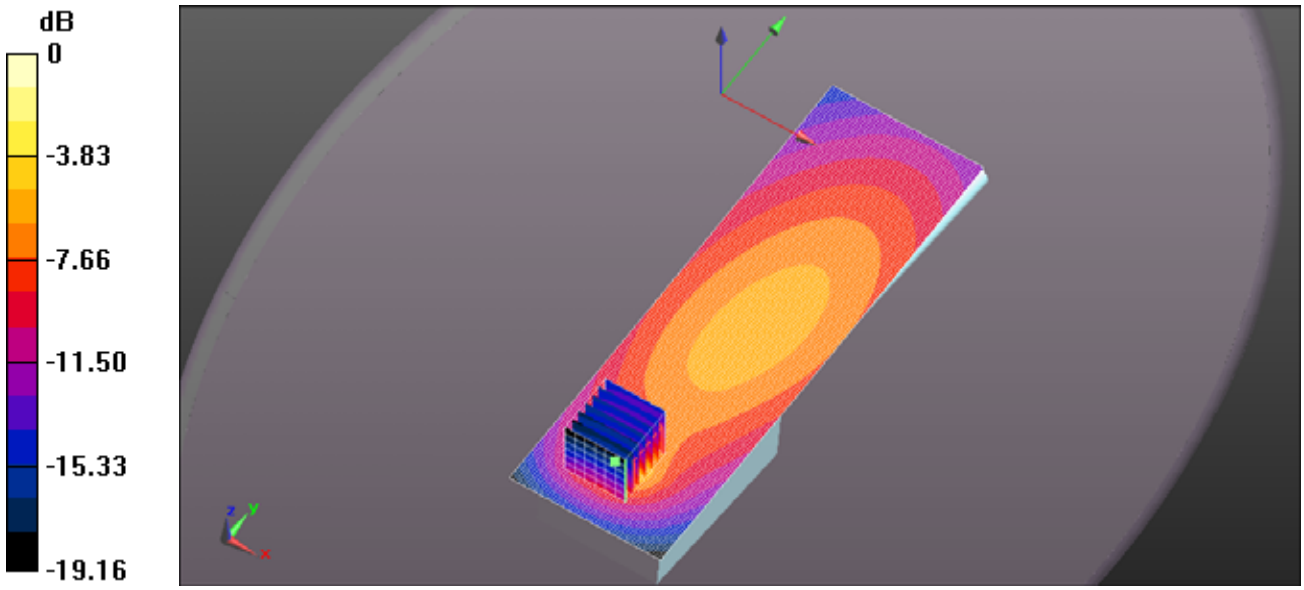

0 dB = 6.33 W/kg = 8.01 dBW/kg

Test Laboratory: Ultratech Group of Labs

FILE NAME: ICOM-470Q IC-M85 BP-290 FA-SC58V LC-188 HM-236 155MHZ BODY.DA52:0

DUT: ICOM IC-M85; Type: VHF Transceiver; Serial: 00000001

Communication System: UID 10000, CW; Frequency: 155 MHz; Duty Cycle: 1:1
Medium parameters used (interpolated): f = 155 MHz; σ = 0.831 S/m; ε_r = 61.442; ρ = 1000 kg/m^3 ;
Phantom section: Flat Section ; Measurement Standard: DASY5 (IEEE/IEC/ANSI C63.19-2007)

DASY Configuration:

- Probe: EX3DV4 - SN3673; ConvF(10.93, 10.93, 10.93); Calibrated: 3/20/2017;
- Sensor-Surface: 3mm (Mechanical Surface Detection)
- Electronics: DAE4 Sn874; Calibrated: 8/21/2017
- Phantom: ELI 4.0; Type: QD OVA 001 BB; Serial: 1057
- DASY52 52.10.0(1446); SEMCAD X 14.6.10(7417)

ICOM IC-M85 5W - Body 0mm Back FA-SC58V BP-290 LC-188 HM-236/IC-M85/Zoom Scan (7x7x7) (7x7x7)/Cube 0: Measurement grid: dx=5mm, dy=5mm, dz=5mm
Reference Value = 31.22 V/m; Power Drift = -0.52 dB
Peak SAR (extrapolated) = 24.3 W/kg
SAR(1 g) = 3.83 W/kg; SAR(10 g) = 1.1 W/kg (SAR corrected for target medium).
Maximum value of SAR (measured) = 5.85 W/kg

ICOM IC-M85 5W - Body 0mm Back FA-SC58V BP-290 LC-188 HM-236/IC-M85/Area Scan (51x161x1): Interpolated grid: dx=1.500 mm, dy=1.500 mm.
Maximum value of SAR (interpolated) = 2.07 W/kg

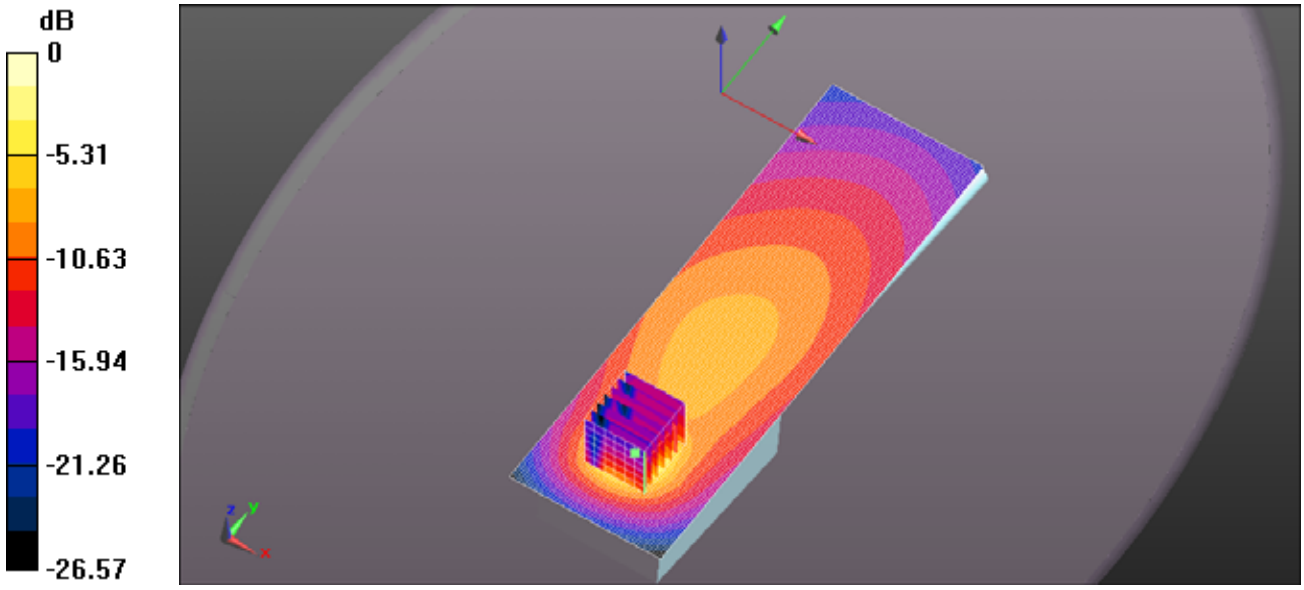

0 dB = 5.85 W/kg = 7.67 dBW/kg

Test Laboratory: Ultratech Group of Labs

FILE NAME: ICOM-470Q IC-M85 BP-290 FA-SC58V LC-188 HM-163 155MHZ BODY.DA52:0

DUT: ICOM IC-M85; Type: VHF Transceiver; Serial: 00000001

Communication System: UID 10000, CW; Frequency: 155 MHz; Duty Cycle: 1:1
Medium parameters used (interpolated): f = 155 MHz; σ = 0.831 S/m; ε_r = 61.442; ρ = 1000 kg/m^3 ;
Phantom section: Flat Section ; Measurement Standard: DASY5 (IEEE/IEC/ANSI C63.19-2007)

DASY Configuration:

- Probe: EX3DV4 - SN3673; ConvF(10.93, 10.93, 10.93); Calibrated: 3/20/2017;
- Sensor-Surface: 3mm (Mechanical Surface Detection)
- Electronics: DAE4 Sn874; Calibrated: 8/21/2017
- Phantom: ELI 4.0; Type: QD OVA 001 BB; Serial: 1057
- DASY52 52.10.0(1446); SEMCAD X 14.6.10(7417)

ICOM IC-M85 5W - Body 0mm Back FA-SC58V BP-290 LC-188 HM-163/IC-M85/Zoom Scan (7x7x7) (7x7x7)/Cube 0: Measurement grid: dx=5mm, dy=5mm, dz=5mm
Reference Value = 42.23 V/m; Power Drift = -0.48 dB
Peak SAR (extrapolated) = 24.2 W/kg
SAR(1 g) = 4.1 W/kg; SAR(10 g) = 1.34 W/kg (SAR corrected for target medium)
Maximum value of SAR (measured) = 5.48 W/kg

ICOM IC-M85 5W - Body 0mm Back FA-SC58V BP-290 LC-188 HM-163/IC-M85/Area Scan (51x161x1): Interpolated grid: dx=1.500 mm, dy=1.500 mm
Maximum value of SAR (interpolated) = 2.55 W/kg

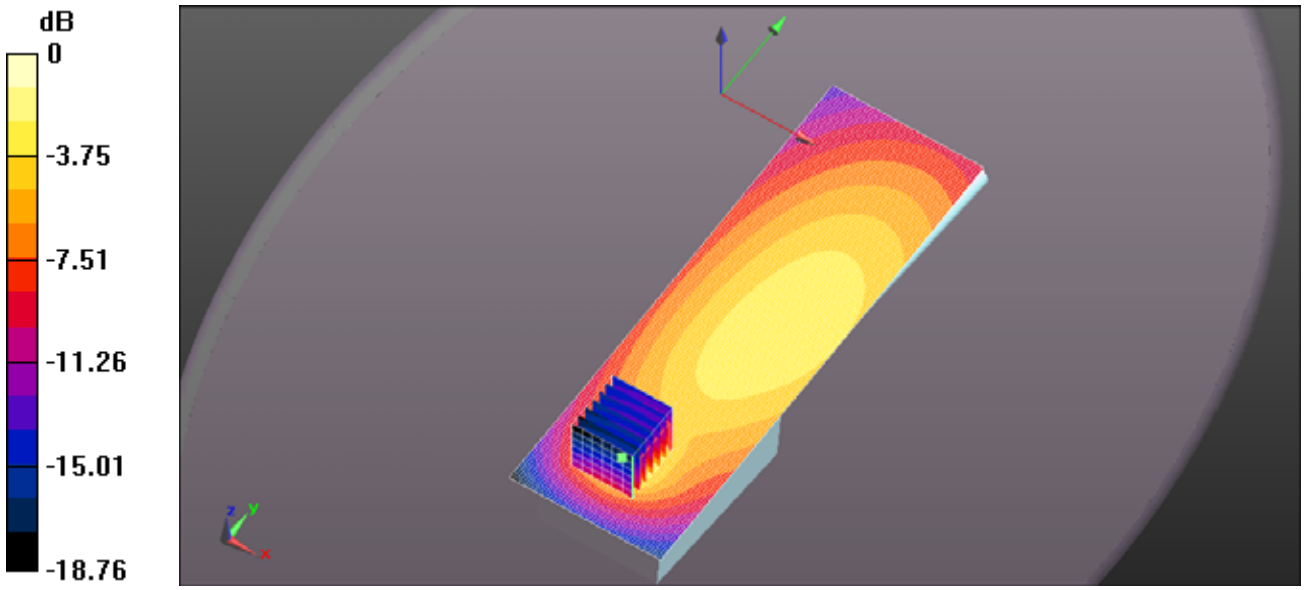

0 dB = 5.48 W/kg = 7.39 dBW/kg

Test Laboratory: Ultratech Group of Labs

FILE NAME: ICOM-470Q IC-M85 BP-290 FA-SC58V LC-188 AD-135 SP-29 155MHZ BODY.DA52:0

DUT: ICOM IC-M85; Type: VHF Transceiver; Serial: 00000001

Communication System: UID 10000, CW; Frequency: 155 MHz; Duty Cycle: 1:1
Medium parameters used (interpolated): f = 155 MHz; σ = 0.831 S/m; ε_r = 61.442; ρ = 1000 kg/m^3 ;
Phantom section: Flat Section ; Measurement Standard: DASY5 (IEEE/IEC/ANSI C63.19-2007)

DASY Configuration:

- Probe: EX3DV4 - SN3673; ConvF(10.93, 10.93, 10.93); Calibrated: 3/20/2017;
- Sensor-Surface: 3mm (Mechanical Surface Detection)
- Electronics: DAE4 Sn874; Calibrated: 8/21/2017
- Phantom: ELI 4.0; Type: QD OVA 001 BB; Serial: 1057
- DASY52 52.10.0(1446); SEMCAD X 14.6.10(7417)

ICOM IC-M85 5W - Body 0mm Back FA-SC58V BP-290 LC-188 AD-135 SP-29/IC-M85/Zoom Scan (7x7x7) (7x7x7)/Cube 0: Measurement grid: dx=5mm, dy=5mm, dz=5mm
Reference Value = 38.09 V/m; Power Drift = -0.51 dB
Peak SAR (extrapolated) = 23.3 W/kg
SAR(1 g) = 3.9 W/kg; SAR(10 g) = 1.26 W/kg (SAR corrected for target medium)
Maximum value of SAR (measured) = 6.13 W/kg

ICOM IC-M85 5W - Body 0mm Back FA-SC58V BP-290 LC-188 AD-135 SP-29/IC-M85/Area Scan (51x161x1): Interpolated grid: dx=1.500 mm, dy=1.500 mm
Maximum value of SAR (interpolated) = 3.61 W/kg

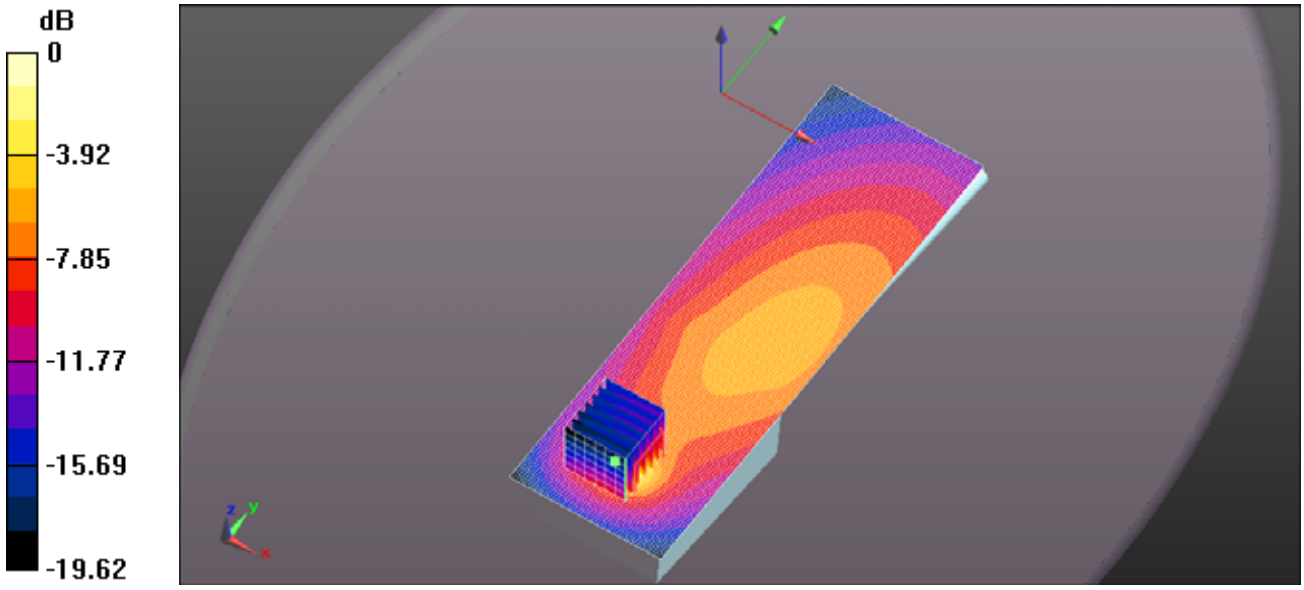

0 dB = 6.13 W/kg = 7.87 dBW/kg

EXHIBIT 4. BODY MEASUREMENT SUMMARY

Configuration	Power (W)	CH	CH. Freq	Body					
				SAR_{1g}	SAR_{10g}	Drift	Drift	SAR_{1g}	SAR_{10g}
			(MHz)	(W/Kg)	(W/Kg)	(dB)	Scaling	(W/Kg)	(W/Kg)
FA-SC58V BP-290 LC-188 HM-222	5.01	1	136	0.27	0.20	-0.26	1.06	0.29	0.22
	5.04	2	142	1.96	0.60	-0.69	1.17	2.30	0.71
	5.06	3	149	2.88	0.85	-0.22	1.05	3.03	0.89
	5.08	4	155	4.9	1.5	-0.15	1.04	5.06	1.59
	5.02	5	161	7.48	2.36	-0.78	1.20	8.95	2.82
	5.08	6	168	3.09	1.02	0.17	0.96	2.97	0.98
	5.12	7	174	1.16	0.38	-0.04	1.01	1.17	0.38

Test Laboratory: Ultratech Group of Labs

FILE NAME: ICOM-470Q IC-M85 BP-290 FA-SC58V LC-188 HM-222 136MHZ BODY.DA52:0

DUT: ICOM IC-M85; Type: VHF Transceiver; Serial: 00000001

Communication System: UID 10000, CW; Frequency: 136 MHz; Duty Cycle: 1:1
Medium parameters used: f = 136 MHz; σ = 0.823 S/m; ε_r = 62.357; ρ = 1000 kg/m^3 ; Phantom section: Flat Section ; Measurement Standard: DASY5 (IEEE/IEC/ANSI C63.19-2007)

DASY Configuration:

- Probe: EX3DV4 - SN3673; ConvF(10.93, 10.93, 10.93); Calibrated: 3/20/2017;
- Sensor-Surface: 3mm (Mechanical Surface Detection)
- Electronics: DAE4 Sn874; Calibrated: 8/21/2017
- Phantom: ELI 4.0; Type: QD OVA 001 BB; Serial: 1057
- DASY52 52.10.0(1446); SEMCAD X 14.6.10(7417)

ICOM IC-M85 5W - Body 0mm Back FA-SC58V BP-290 LC-188 HM-222/IC-M85/Zoom Scan (7x7x7) (7x7x7)/Cube 0: Measurement grid: dx=5mm, dy=5mm, dz=5mm
Reference Value = 17.31 V/m; Power Drift = -0.26 dB
Peak SAR (extrapolated) = 0.364 W/kg
SAR(1 g) = 0.271 W/kg; SAR(10 g) = 0.204 W/kg (SAR corrected for target medium)
Maximum value of SAR (measured) = 0.301 W/kg

ICOM IC-M85 5W - Body 0mm Back FA-SC58V BP-290 LC-188 HM-222/IC-M85/Area Scan (51x161x1): Interpolated grid: dx=1.500 mm, dy=1.500 mm
Maximum value of SAR (interpolated) = 0.306 W/kg

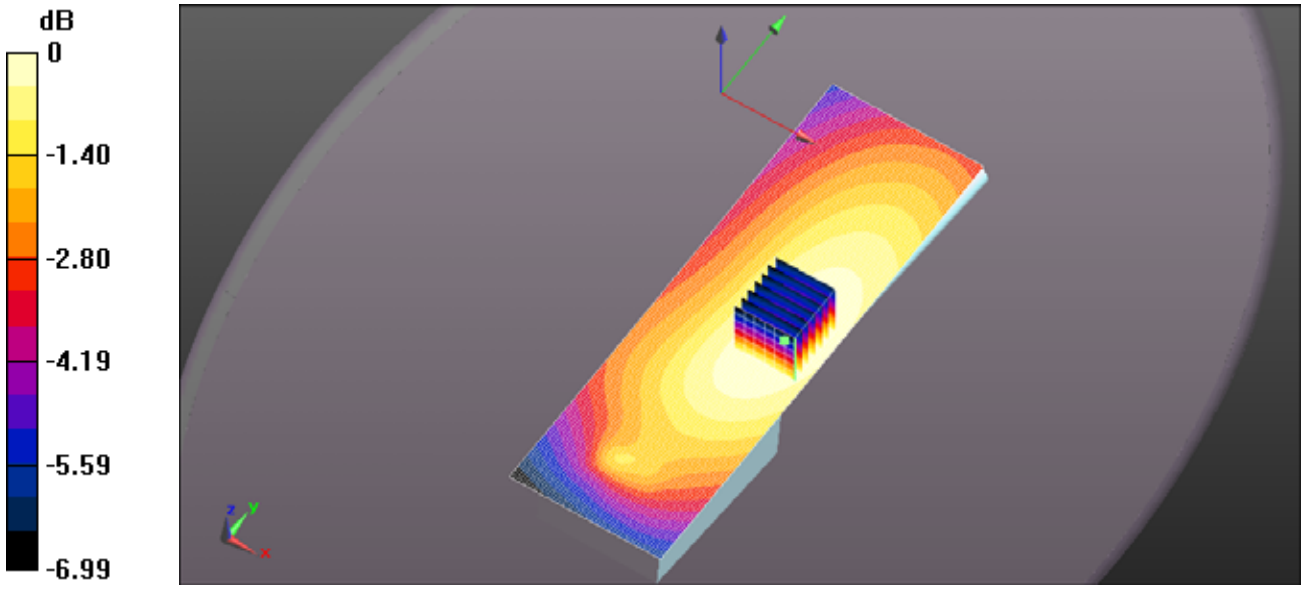

0 dB = 0.301 W/kg = -5.22 dBW/kg

Test Laboratory: Ultratech Group of Labs

FILE NAME: ICOM-470Q IC-M85 BP-290 FA-SC58V LC-188 HM-222 142MHZ BODY.DA52:0

DUT: ICOM IC-M85; Type: VHF Transceiver; Serial: 00000001

Communication System: UID 10000, CW; Frequency: 142 MHz; Duty Cycle: 1:1
Medium parameters used: f = 142 MHz; σ = 0.825 S/m; ε_r = 62.019; ρ = 1000 kg/m^3 ; Phantom section: Flat Section ; Measurement Standard: DASY5 (IEEE/IEC/ANSI C63.19-2007)

DASY Configuration:

- Probe: EX3DV4 - SN3673; ConvF(10.93, 10.93, 10.93); Calibrated: 3/20/2017;
- Sensor-Surface: 3mm (Mechanical Surface Detection)
- Electronics: DAE4 Sn874; Calibrated: 8/21/2017
- Phantom: ELI 4.0; Type: QD OVA 001 BB; Serial: 1057
- DASY52 52.10.0(1446); SEMCAD X 14.6.10(7417)

ICOM IC-M85 5W - Body 0mm Back FA-SC58V BP-290 LC-188 HM-222/IC-M85/Zoom Scan (7x7x7) (7x7x7)/Cube 0: Measurement grid: dx=5mm, dy=5mm, dz=5mm
Reference Value = 20.81 V/m; Power Drift = -0.69 dB
Peak SAR (extrapolated) = 12.3 W/kg
SAR(1 g) = 1.96 W/kg; SAR(10 g) = 0.604 W/kg (SAR corrected for target medium)
Maximum value of SAR (measured) = 3.05 W/kg

ICOM IC-M85 5W - Body 0mm Back FA-SC58V BP-290 LC-188 HM-222/IC-M85/Area Scan (51x161x1): Interpolated grid: dx=1.500 mm, dy=1.500 mm
Maximum value of SAR (interpolated) = 1.94 W/kg

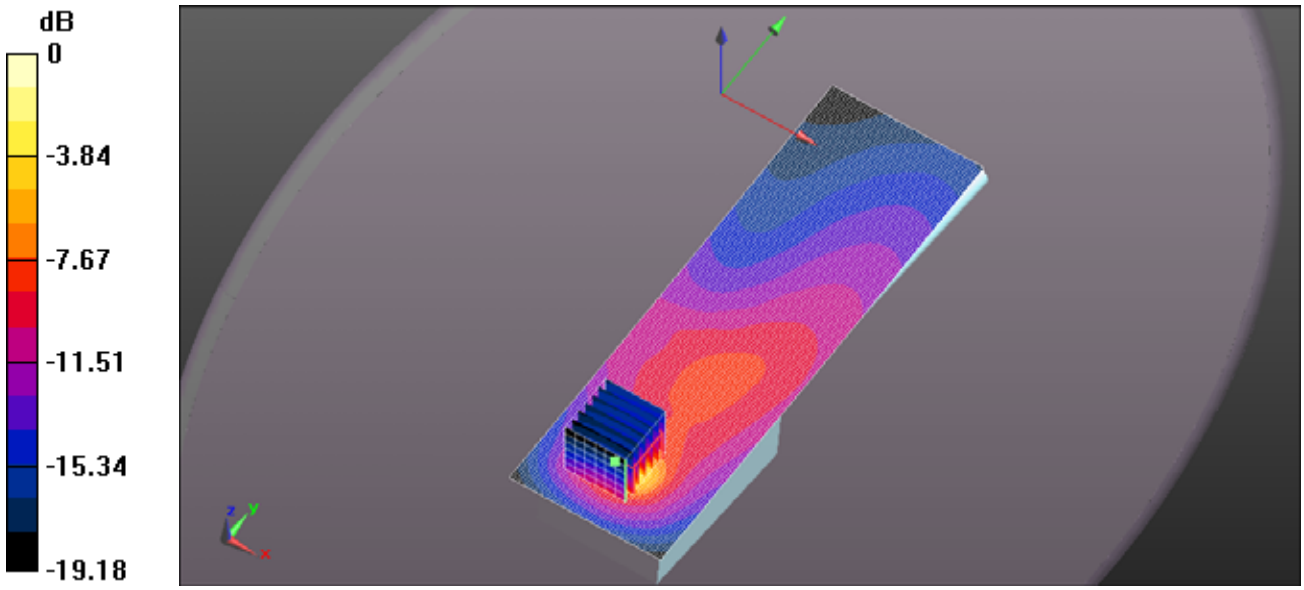

0 dB = 3.05 W/kg = 4.84 dBW/kg

Test Laboratory: Ultratech Group of Labs

FILE NAME: ICOM-470Q IC-M85 BP-290 FA-SC58V LC-188 HM-222 149MHZ BODY.DA52:0

DUT: ICOM IC-M85; Type: VHF Transceiver; Serial: 00000001

Communication System: UID 10000, CW; Frequency: 149 MHz; Duty Cycle: 1:1
Medium parameters used (interpolated): f = 149 MHz; σ = 0.829 S/m; ε_r = 61.753; ρ = 1000 kg/m^3 ;
Phantom section: Flat Section ; Measurement Standard: DASY5 (IEEE/IEC/ANSI C63.19-2007)

DASY Configuration:

- Probe: EX3DV4 - SN3673; ConvF(10.93, 10.93, 10.93); Calibrated: 3/20/2017;
- Sensor-Surface: 3mm (Mechanical Surface Detection)
- Electronics: DAE4 Sn874; Calibrated: 8/21/2017
- Phantom: ELI 4.0; Type: QD OVA 001 BB; Serial: 1057
- DASY52 52.10.0(1446); SEMCAD X 14.6.10(7417)

ICOM IC-M85 5W - Body 0mm Back FA-SC58V BP-290 LC-188 HM-222/IC-M85/Zoom Scan (7x7x7) (8x7x7)/Cube 0: Measurement grid: dx=5mm, dy=5mm, dz=5mm
Reference Value = 26.01 V/m; Power Drift = -0.22 dB
Peak SAR (extrapolated) = 19.7 W/kg
SAR(1 g) = 2.88 W/kg; SAR(10 g) = 0.850 W/kg (SAR corrected for target medium)
Maximum value of SAR (measured) = 3.96 W/kg

ICOM IC-M85 5W - Body 0mm Back FA-SC58V BP-290 LC-188 HM-222/IC-M85/Area Scan (51x161x1): Interpolated grid: dx=1.500 mm, dy=1.500 mm
Maximum value of SAR (interpolated) = 3.25 W/kg

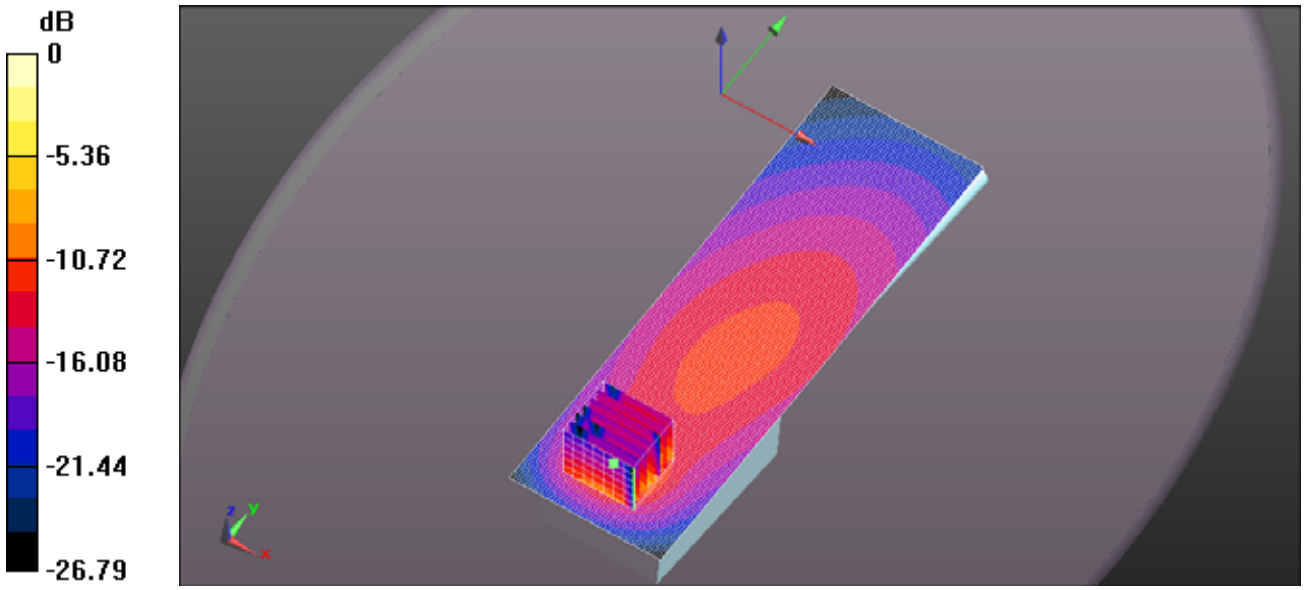

0 dB = 3.96 W/kg = 5.97 dBW/kg

FILE NAME: ICOM-470Q IC-M85 BP-290 FA-SC58V LC-188 HM-222 155MHZ BODY 2.DA52:0

DUT: ICOM IC-M85; Type: VHF Transceiver; Serial: 00000001

Communication System: UID 10000, CW; Frequency: 155 MHz; Duty Cycle: 1:1
Medium parameters used (interpolated): f = 155 MHz; σ = 0.831 S/m; ε_r = 61.442; ρ = 1000 kg/m^3 ;
Phantom section: Flat Section ; Measurement Standard: DASY5 (IEEE/IEC/ANSI C63.19-2007)

DASY Configuration:

- Probe: EX3DV4 - SN3673; ConvF(10.93, 10.93, 10.93); Calibrated: 3/20/2017;
- Sensor-Surface: 3mm (Mechanical Surface Detection)
- Electronics: DAE4 Sn874; Calibrated: 8/21/2017
- Phantom: ELI 4.0; Type: QD OVA 001 BB; Serial: 1057
- DASY52 52.10.0(1446); SEMCAD X 14.6.10(7417)

ICOM IC-M85 5W - Body 0mm Back FA-SC58V BP-290 LC-188 HM-222/IC-M85/Zoom Scan (7x7x7) (7x7x7)/Cube 0: Measurement grid: dx=5mm, dy=5mm, dz=5mm
Reference Value = 41.48 V/m; Power Drift = -0.15 dB
Peak SAR (extrapolated) = 30.5 W/kg
SAR(1 g) = 4.89 W/kg; SAR(10 g) = 1.54 W/kg (SAR corrected for target medium)
Maximum value of SAR (measured) = 6.33 W/kg

ICOM IC-M85 5W - Body 0mm Back FA-SC58V BP-290 LC-188 HM-222/IC-M85/Area Scan (51x161x1): Interpolated grid: dx=1.500 mm, dy=1.500 mm
Maximum value of SAR (interpolated) = 4.83 W/kg

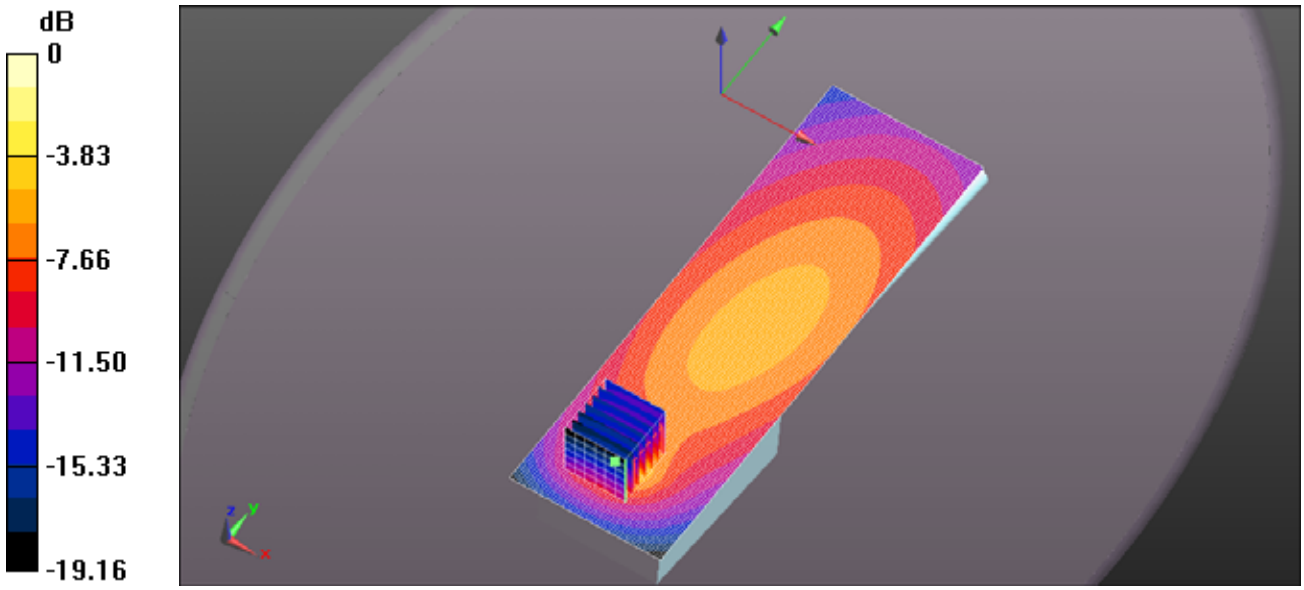

0 dB = 6.33 W/kg = 8.01 dBW/kg

Test Laboratory: Ultratech Group of Labs

FILE NAME: ICOM-470Q IC-M85 BP-290 FA-SC58V LC-188 HM-222 161MHZ BODY.DA52:0

DUT: ICOM IC-M85; Type: VHF Transceiver; Serial: 00000001

Communication System: UID 10000, CW; Frequency: 161 MHz; Duty Cycle: 1:1
Medium parameters used (interpolated): f = 161 MHz; σ = 0.835 S/m; ε_r = 61.192; ρ = 1000 kg/m^3 ;
Phantom section: Flat Section ; Measurement Standard: DASY5 (IEEE/IEC/ANSI C63.19-2007)

DASY Configuration:

- Probe: EX3DV4 - SN3673; ConvF(10.93, 10.93, 10.93); Calibrated: 3/20/2017;
- Sensor-Surface: 3mm (Mechanical Surface Detection)
- Electronics: DAE4 Sn874; Calibrated: 8/21/2017
- Phantom: ELI 4.0; Type: QD OVA 001 BB; Serial: 1057
- DASY52 52.10.0(1446); SEMCAD X 14.6.10(7417)

ICOM IC-M85 5W - Body 0mm Back FA-SC58V BP-290 LC-188 HM-222/IC-M85/Zoom Scan (7x7x7) (7x7x7)/Cube 0: Measurement grid: dx=5mm, dy=5mm, dz=5mm
Reference Value = 54.78 V/m; Power Drift = -0.78 dB
Peak SAR (extrapolated) = 45.6 W/kg
SAR(1 g) = 7.48 W/kg; SAR(10 g) = 2.36 W/kg (SAR corrected for target medium)
Maximum value of SAR (measured) = 10.6 W/kg

ICOM IC-M85 5W - Body 0mm Back FA-SC58V BP-290 LC-188 HM-222/IC-M85/Area Scan (51x161x1): Interpolated grid: dx=1.500 mm, dy=1.500 mm.
Maximum value of SAR (interpolated) = 8.50 W/kg

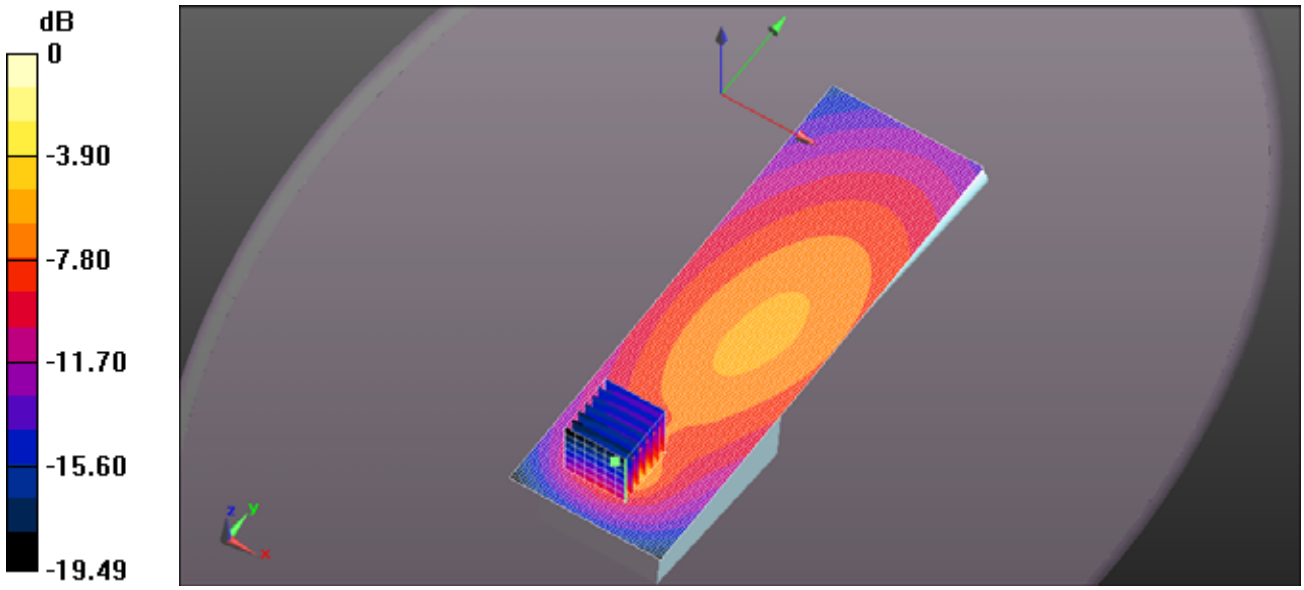

0 dB = 10.6 W/kg = 10.25 dBW/kg

Test Laboratory: Ultratech Group of Labs

FILE NAME: ICOM-470Q IC-M85 BP-290 FA-SC58V LC-188 HM-222 168MHZ BODY.DA52:0

DUT: ICOM IC-M85; Type: VHF Transceiver; Serial: 00000001

Communication System: UID 10000, CW; Frequency: 168 MHz; Duty Cycle: 1:1
Medium parameters used: f = 168 MHz; σ = 0.841 S/m; ε_r = 60.993; ρ = 1000 kg/m^3 ; Phantom section: Flat Section ; Measurement Standard: DASY5 (IEEE/IEC/ANSI C63.19-2007)

DASY Configuration:

- Probe: EX3DV4 - SN3673; ConvF(10.93, 10.93, 10.93); Calibrated: 3/20/2017;
- Sensor-Surface: 3mm (Mechanical Surface Detection)
- Electronics: DAE4 Sn874; Calibrated: 8/21/2017
- Phantom: ELI 4.0; Type: QD OVA 001 BB; Serial: 1057
- DASY52 52.10.0(1446); SEMCAD X 14.6.10(7417)

ICOM IC-M85 5W - Body 0mm Back FA-SC58V BP-290 LC-188 HM-222/IC-M85/Zoom Scan (7x7x7) (7x7x7)/Cube 0: Measurement grid: dx=5mm, dy=5mm, dz=5mm
Reference Value = 38.15 V/m; Power Drift = -0.17 dB
Peak SAR (extrapolated) = 16.0 W/kg
SAR(1 g) = 3.09 W/kg; SAR(10 g) = 1.02 W/kg (SAR corrected for target medium)
Maximum value of SAR (measured) = 5.28 W/kg

ICOM IC-M85 5W - Body 0mm Back FA-SC58V BP-290 LC-188 HM-222/IC-M85/Area Scan (51x161x1): Interpolated grid: dx=1.500 mm, dy=1.500 mm
Maximum value of SAR (interpolated) = 4.48 W/kg

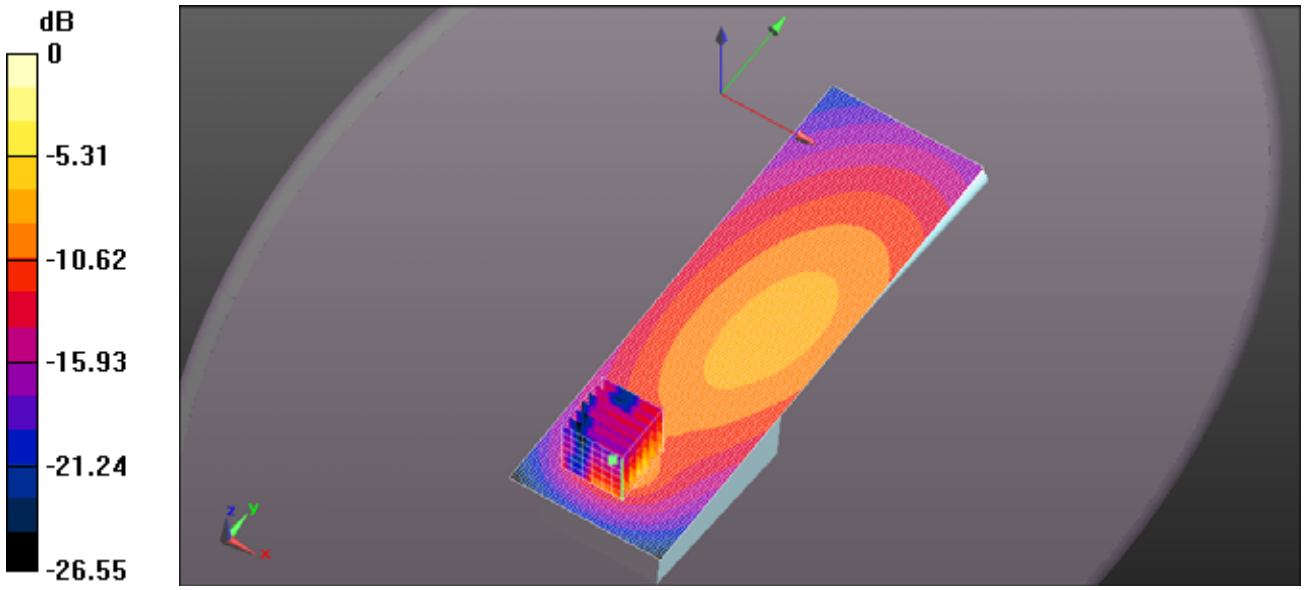

0 dB = 5.28 W/kg = 7.23 dBW/kg

Test Laboratory: Ultratech Group of Labs

FILE NAME: ICOM-470Q IC-M85 BP-290 FA-SC58V LC-188 HM-222 174MHZ BODY.DA52:0

DUT: ICOM IC-M85; Type: VHF Transceiver; Serial: 00000001

Communication System: UID 10000, CW; Frequency: 174 MHz; Duty Cycle: 1:1
Medium parameters used: f = 174 MHz; σ = 0.843 S/m; ε_r = 61.01; ρ = 1000 kg/m^3 ; Phantom section: Flat Section ; Measurement Standard: DASY5 (IEEE/IEC/ANSI C63.19-2007)

DASY Configuration:

- Probe: EX3DV4 - SN3673; ConvF(10.93, 10.93, 10.93); Calibrated: 3/20/2017;
- Sensor-Surface: 3mm (Mechanical Surface Detection)
- Electronics: DAE4 Sn874; Calibrated: 8/21/2017
- Phantom: ELI 4.0; Type: QD OVA 001 BB; Serial: 1057
- DASY52 52.10.0(1446); SEMCAD X 14.6.10(7417)

ICOM IC-M85 5W - Body 0mm Back FA-SC58V BP-290 LC-188 HM-222/IC-M85/Zoom Scan (7x7x7) (7x7x7)/Cube 0: Measurement grid: dx=5mm, dy=5mm, dz=5mm
Reference Value = 25.24 V/m; Power Drift = -0.04 dB
Peak SAR (extrapolated) = 6.76 W/kg
SAR(1 g) = 1.16 W/kg; SAR(10 g) = 0.381 W/kg (SAR corrected for target medium)
Maximum value of SAR (measured) = 1.73 W/kg

ICOM IC-M85 5W - Body 0mm Back FA-SC58V BP-290 LC-188 HM-222/IC-M85/Area Scan (51x161x1): Interpolated grid: dx=1.500 mm, dy=1.500 mm
Maximum value of SAR (interpolated) = 1.19 W/kg

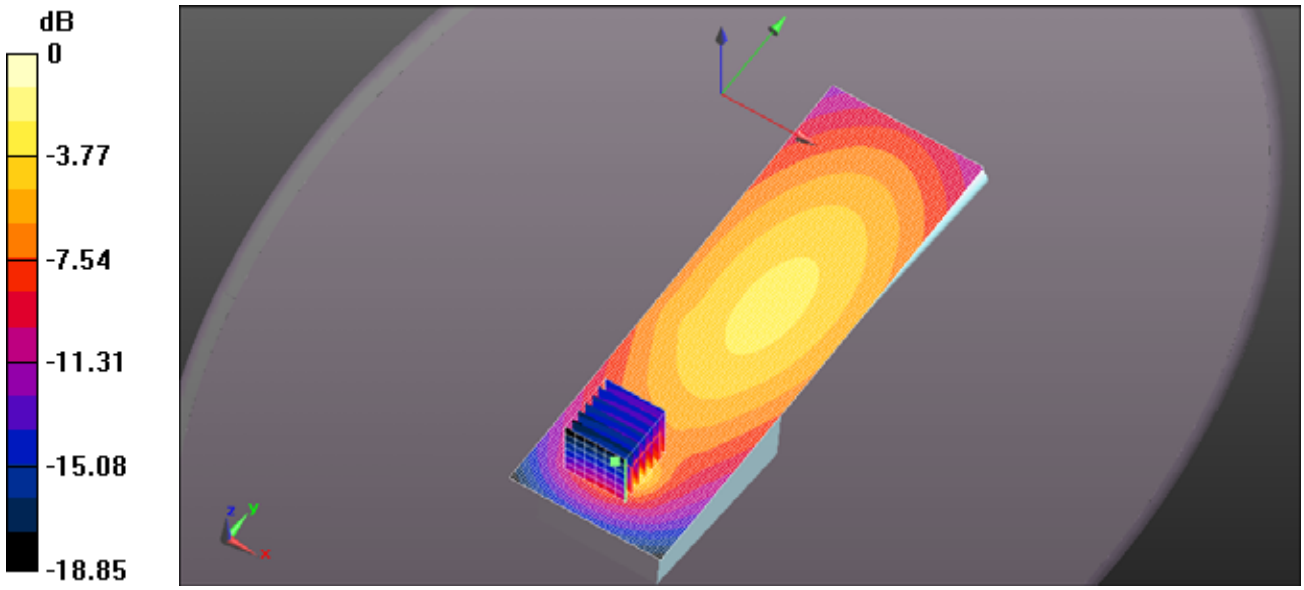

0 dB = 1.73 W/kg = 2.38 dBW/kg