APPENDIX 1

SAR Measurement Data

Table of Contents

EXHIBIT 1. PRESCAN MEASUREMENT SUMMARY 3

FILE NAME: ICOM-490Q BODY FA-SC58V 136MHZ MB-136.DA52:0 4
FILE NAME: ICOM-490Q BODY FA-SC58V 136MHZ MBB-3.DA52:0 5

EXHIBIT 2. HEAD MEASUREMENT SUMMARY 6

FILE NAME: ICOM-490Q BODY FA-SC58V 136MHZ MBB-3.DA52:0 7
FILE NAME: ICOM-490Q BODY FA-SC58V 142MHZ.DA52:0 8
FILE NAME: ICOM-490Q BODY FA-SC58V 149MHZ.DA52:0 9
FILE NAME: ICOM-490Q BODY FA-SC58V 156.025MHZ.DA52:0 10
FILE NAME: ICOM-490Q BODY FA-SC58V 157.425MHZ.DA52:0 11
FILE NAME: ICOM-490Q BODY FA-SC58V 161MHZ.DA52:0 12
FILE NAME: ICOM-490Q BODY FA-SC58V 168MHZ.DA52:0 13
FILE NAME: ICOM-490Q BODY FA-SC58V 174MHZ.DA52:0 14

EXHIBIT 3. BODY MEASUREMENT SUMMARY 15

FILE NAME: ICOM-490Q HEAD FA-SC58V 136MHZ.DA52:0 16
FILE NAME: ICOM-490Q HEAD FA-SC58V 142MHZ.DA52:0 17
FILE NAME: ICOM-490Q HEAD FA-SC58V 149MHZ.DA52:0 18
FILE NAME: ICOM-490Q HEAD FA-SC58V 156.025MHZ.DA52:0 19
FILE NAME: ICOM-490Q HEAD FA-SC58V 157.425MHZ.DA52:0 20
FILE NAME: ICOM-490Q HEAD FA-SC58V 161MHZ.DA52:0 21
FILE NAME: ICOM-490Q HEAD FA-SC58V 168MHZ.DA52:0 22
FILE NAME: ICOM-490Q HEAD FA-SC58V 174MHZ.DA52:0 23

EXHIBIT 1. PRESCAN MEASUREMENT SUMMARY

Body Prescan

Belt Clip	Antenna	Power (dBm)	CH	CH. Freq (MHz)	HEAD SAR1g (W/Kg) BP-292UL 2010(mAh)	HEAD SAR10g (W/Kg) BP-292UL 2010(mAh)
MB-136	FA-SC58V	1.77	1	136	0.0529	0.0399
MBB-3		1.77	1	136	0.0784	0.0574

Test Laboratory: Ultratech Group of Labs

FILE NAME: ICOM-490Q BODY FA-SC58V 136MHZ MB-136.DA52:0

DUT: IC-M85UL; Type: VHF Transceiver; Serial: 00000131

Communication System: UID 10000, CW; Frequency: 136 MHz; Duty Cycle: 1:1
Medium parameters used: f = 136 MHz; σ = 0.752 S/m; ε_r = 62.037; ρ = 1000 kg/m^3 ; Phantom section: Flat Section ; Measurement Standard: DASY5 (IEEE/IEC/ANSI C63.19-2011)

DASY Configuration:

- Probe: ES3DV3 - SN3250; ConvF(7.29, 7.29, 7.29); Calibrated: 3/13/2018;
- Sensor-Surface: 3mm (Mechanical Surface Detection)
- Electronics: DAE4 Sn874; Calibrated: 8/21/2017
- Phantom: ELI 4.0; Type: QD OVA 001 BB; Serial: 1057
- DASY52 52.10.0(1446); SEMCAD X 14.6.10(7417)

Configuration Body for IC-M85UL/Body Back, P=2W, d=0mm/Zoom Scan (7x7x7)

(7x7x7)/Cube 0: Measurement grid: dx=5mm, dy=5mm, dz=5mm
Reference Value = 7.724 V/m; Power Drift = -0.21 dB
Peak SAR (extrapolated) = 0.0760 W/kg
SAR(1 g) = 0.053 W/kg; SAR(10 g) = 0.040 W/kg (SAR corrected for target medium)
Maximum value of SAR (measured) = 0.0591 W/kg

Configuration Body for IC-M85UL/Body Back, P=2W, d=0mm/Area Scan (61x111x1):

Interpolated grid: dx=1.500 mm, dy=1.500 mm
Maximum value of SAR (interpolated) = 0.0588 W/kg

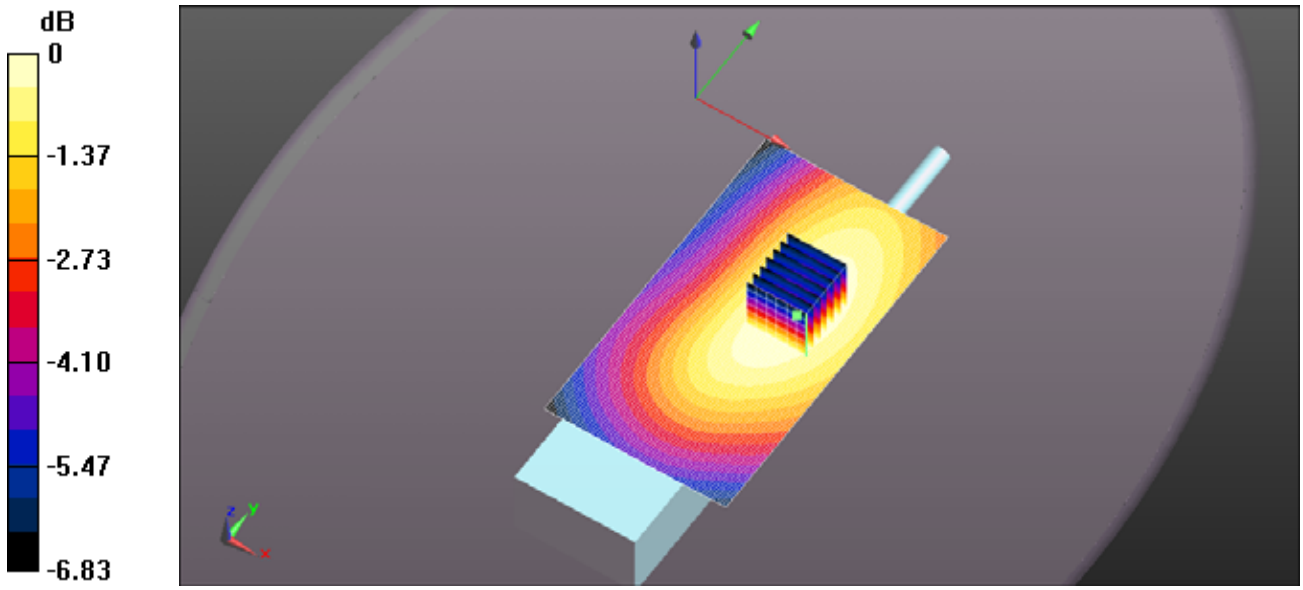

0 dB = 0.0591 W/kg = -12.29 dBW/kg

Test Laboratory: Ultratech Group of Labs

FILE NAME: ICOM-490Q BODY FA-SC58V 136MHZ MBB-3.DA52:0

DUT: IC-M85UL; Type: VHF Transceiver; Serial: 00000131

Communication System: UID 10000, CW; Frequency: 136 MHz; Duty Cycle: 1:1
Medium parameters used: f = 136 MHz; σ = 0.752 S/m; ε_r = 62.037; ρ = 1000 kg/m^3 ; Phantom section: Flat Section ; Measurement Standard: DASY5 (IEEE/IEC/ANSI C63.19-2011)

DASY Configuration:

- Probe: ES3DV3 - SN3250; ConvF(7.29, 7.29, 7.29); Calibrated: 3/13/2018;
- Sensor-Surface: 3mm (Mechanical Surface Detection)
- Electronics: DAE4 Sn874; Calibrated: 8/21/2017
- Phantom: ELI 4.0; Type: QD OVA 001 BB; Serial: 1057
- DASY52 52.10.0(1446); SEMCAD X 14.6.10(7417)

Configuration Body for IC-M85UL/Body Back, P=2W, d=0mm/Zoom Scan (7x7x7)

(7x7x7)/Cube 0: Measurement grid: dx=5mm, dy=5mm, dz=5mm
Reference Value = 10.20 V/m; Power Drift = -0.11 dB
Peak SAR (extrapolated) = 0.115 W/kg
SAR(1 g) = 0.078 W/kg; SAR(10 g) = 0.057 W/kg (SAR corrected for target medium)
Maximum value of SAR (measured) = 0.0883 W/kg

Configuration Body for IC-M85UL/Body Back, P=2W, d=0mm/Area Scan (61x111x1):

Interpolated grid: dx=1.500 mm, dy=1.500 mm
Maximum value of SAR (interpolated) = 0.0882 W/kg

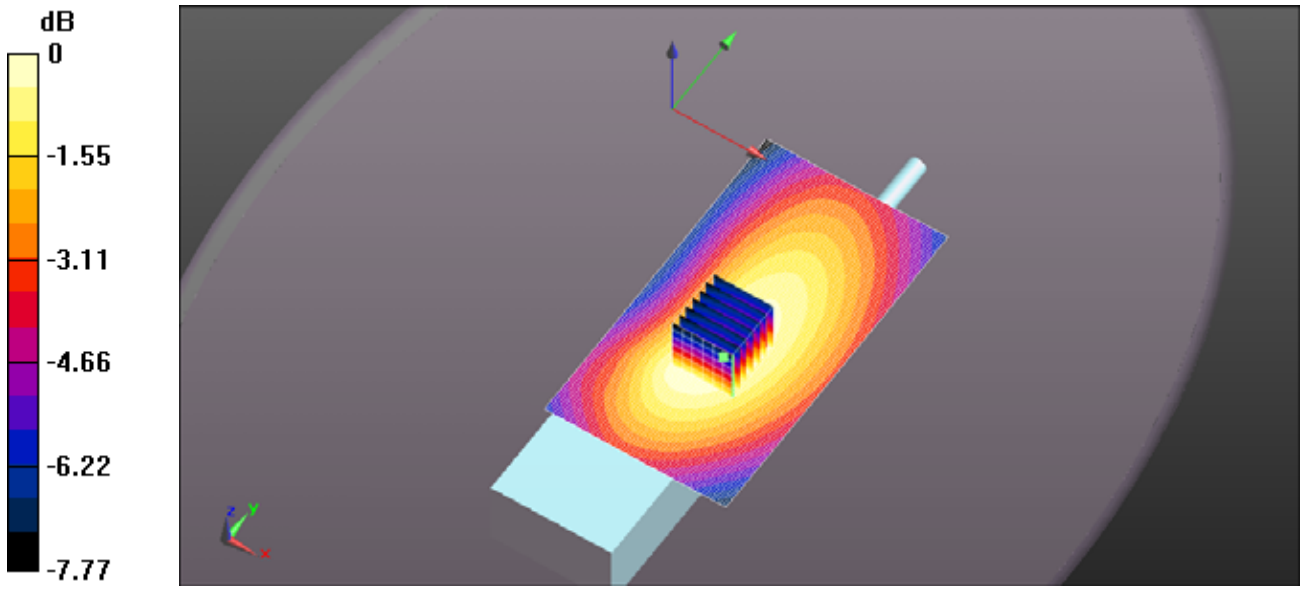

0 dB = 0.0883 W/kg = -10.54 dBW/kg

EXHIBIT 2. HEAD MEASUREMENT SUMMARY

Antenna	Power (W)	CH	CH. Freq (MHz)	HEAD SAR1g (W/Kg) BP-292UL 2010(mAh)	HEAD SAR10g (W/Kg) BP-292UL 2010(mAh)	Power Drift (dBm)
FA-SC58V 136-174 MHz	1.77	1	136	0.078	0.057	-0.11
	1.77	2	142	0.214	0.125	0.09
	1.76	3	149	0.175	0.104	-0.11
	4.97	4	156.025	0.972	0.642	-0.44
	4.90	5	157.425	1.080	0.711	-0.88
	1.73	6	161	0.805	0.543	-0.29
	1.76	7	168	0.504	0.373	-0.36
	1.80	8	174	0.212	0.158	-0.17

Test Laboratory: Ultratech Group of Labs

FILE NAME: ICOM-490Q BODY FA-SC58V 136MHZ MBB-3.DA52:0

DUT: IC-M85UL; Type: VHF Transceiver; Serial: 00000131

Communication System: UID 10000, CW; Frequency: 136 MHz; Duty Cycle: 1:1
Medium parameters used: f = 136 MHz; σ = 0.752 S/m; ε_r = 62.037; ρ = 1000 kg/m^3 ; Phantom section: Flat Section ; Measurement Standard: DASY5 (IEEE/IEC/ANSI C63.19-2011)

DASY Configuration:

- Probe: ES3DV3 - SN3250; ConvF(7.29, 7.29, 7.29); Calibrated: 3/13/2018;
- Sensor-Surface: 3mm (Mechanical Surface Detection)
- Electronics: DAE4 Sn874; Calibrated: 8/21/2017
- Phantom: ELI 4.0; Type: QD OVA 001 BB; Serial: 1057
- DASY52 52.10.0(1446); SEMCAD X 14.6.10(7417)

Configuration Body for IC-M85UL/Body Back, P=2W, d=0mm/Zoom Scan (7x7x7)

(7x7x7)/Cube 0: Measurement grid: dx=5mm, dy=5mm, dz=5mm
Reference Value = 10.20 V/m; Power Drift = -0.11 dB
Peak SAR (extrapolated) = 0.115 W/kg
SAR(1 g) = 0.078 W/kg; SAR(10 g) = 0.057 W/kg (SAR corrected for target medium)
Maximum value of SAR (measured) = 0.0883 W/kg

Configuration Body for IC-M85UL/Body Back, P=2W, d=0mm/Area Scan (61x111x1):

Interpolated grid: dx=1.500 mm, dy=1.500 mm
Maximum value of SAR (interpolated) = 0.0882 W/kg

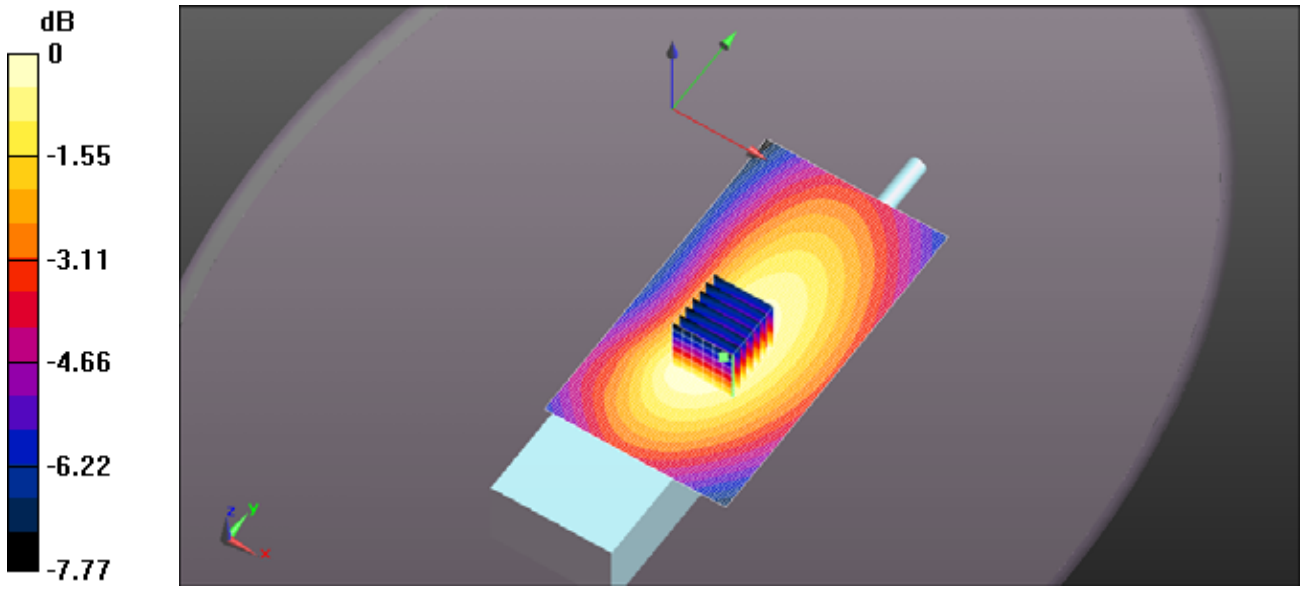

0 dB = 0.0883 W/kg = -10.54 dBW/kg

Test Laboratory: Ultratech Group of Labs

FILE NAME: ICOM-490Q BODY FA-SC58V 142MHZ.DA52:0

DUT: IC-M85UL; Type: VHF Transceiver; Serial: 00000131

Communication System: UID 10000, CW; Frequency: 142 MHz; Duty Cycle: 1:1
Medium parameters used: f = 142 MHz; σ = 0.757 S/m; ε_r = 62.169; ρ = 1000 kg/m^3 ; Phantom section: Flat Section ; Measurement Standard: DASY5 (IEEE/IEC/ANSI C63.19-2011)

DASY Configuration:

- Probe: ES3DV3 - SN3250; ConvF(7.29, 7.29, 7.29); Calibrated: 3/13/2018;
- Sensor-Surface: 3mm (Mechanical Surface Detection)
- Electronics: DAE4 Sn874; Calibrated: 8/21/2017
- Phantom: ELI 4.0; Type: QD OVA 001 BB; Serial: 1057
- DASY52 52.10.0(1446); SEMCAD X 14.6.10(7417)

Configuration Body for IC-M85UL/Body Back, P=2W, d=0mm/Zoom Scan (7x7x7)

(7x7x7)/Cube 0: Measurement grid: dx=5mm, dy=5mm, dz=5mm
Reference Value = 15.08 V/m; Power Drift = 0.09 dB
Peak SAR (extrapolated) = 0.488 W/kg
SAR(1 g) = 0.214 W/kg; SAR(10 g) = 0.125 W/kg (SAR corrected for target medium)
Maximum value of SAR (measured) = 0.262 W/kg

Configuration Body for IC-M85UL/Body Back, P=2W, d=0mm/Area Scan (61x111x1):

Interpolated grid: dx=1.500 mm, dy=1.500 mm
Maximum value of SAR (interpolated) = 0.223 W/kg

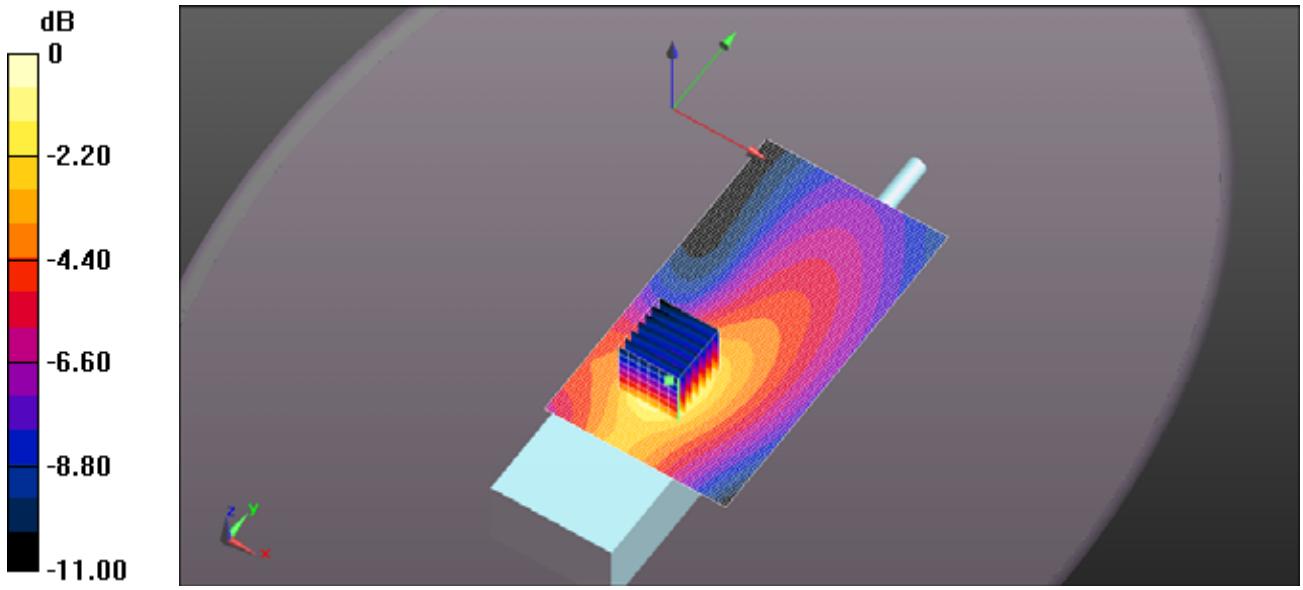

0 dB = 0.262 W/kg = -5.82 dBW/kg

Test Laboratory: Ultratech Group of Labs

FILE NAME: ICOM-490Q BODY FA-SC58V 149MHZ.DA52:0

DUT: IC-M85UL; Type: VHF Transceiver; Serial: 00000131

Communication System: UID 10000, CW; Frequency: 149 MHz; Duty Cycle: 1:1
Medium parameters used (interpolated): f = 149 MHz; σ = 0.762 S/m; ε_r = 62.515; ρ = 1000 kg/m^3 ;
Phantom section: Flat Section ; Measurement Standard: DASY5 (IEEE/IEC/ANSI C63.19-2011)

DASY Configuration:

- Probe: ES3DV3 - SN3250; ConvF(7.29, 7.29, 7.29); Calibrated: 3/13/2018;
- Sensor-Surface: 3mm (Mechanical Surface Detection)
- Electronics: DAE4 Sn874; Calibrated: 8/21/2017
- Phantom: ELI 4.0; Type: QD OVA 001 BB; Serial: 1057
- DASY52 52.10.0(1446); SEMCAD X 14.6.10(7417)

Configuration Body for IC-M85UL/Body Back, P=2W, d=0mm/Zoom Scan (7x7x7)

(7x7x7)/Cube 0: Measurement grid: dx=5mm, dy=5mm, dz=5mm
Reference Value = 13.48 V/m; Power Drift = -0.11 dB
Peak SAR (extrapolated) = 0.392 W/kg
SAR(1 g) = 0.175 W/kg; SAR(10 g) = 0.104 W/kg (SAR corrected for target medium)
Maximum value of SAR (measured) = 0.205 W/kg

Configuration Body for IC-M85UL/Body Back, P=2W, d=0mm/Area Scan (61x111x1):

Interpolated grid: dx=1.500 mm, dy=1.500 mm
Maximum value of SAR (interpolated) = 0.172 W/kg

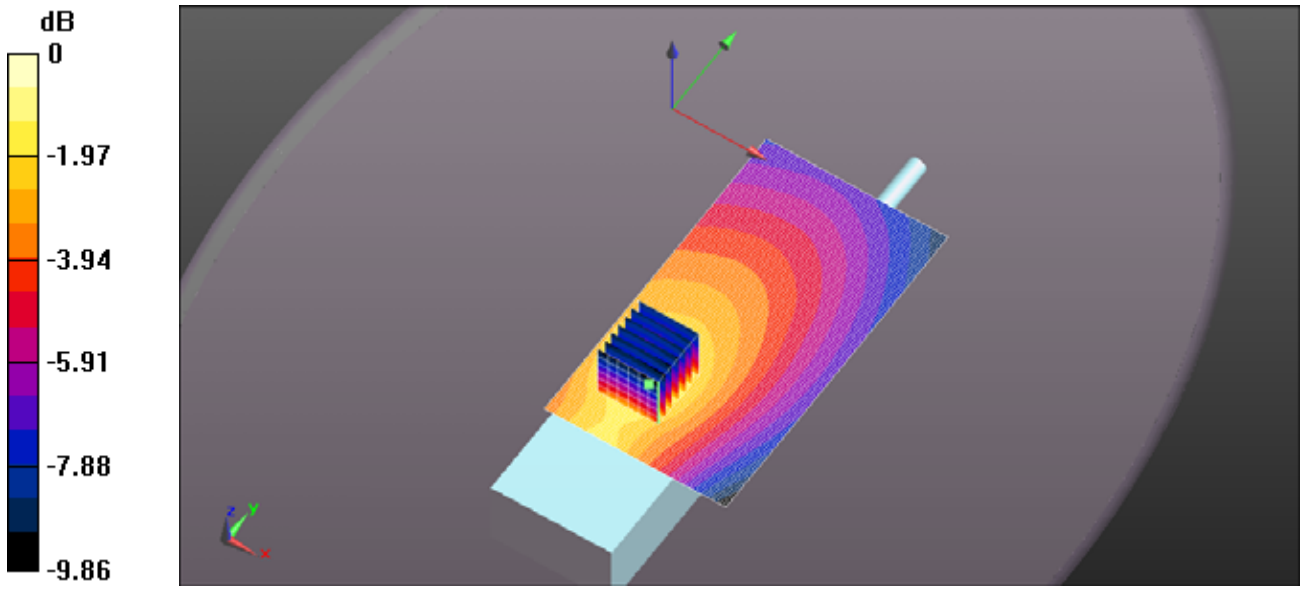

0 dB = 0.205 W/kg = -6.88 dBW/kg

Test Laboratory: Ultratech Group of Labs

FILE NAME: ICOM-490Q BODY FA-SC58V 156.025MHZ.DA52:0

DUT: IC-M85UL; Type: VHF Transceiver; Serial: 00000131

Communication System: UID 10000, CW; Frequency: 156.025 MHz; Duty Cycle: 1:1
Medium parameters used (interpolated): f = 156.025 MHz; σ = 0.766 S/m; ε_r = 62.988; ρ = 1000 kg/m^3 ;
Phantom section: Flat Section ; Measurement Standard: DASY5 (IEEE/IEC/ANSI C63.19-2011)

DASY Configuration:

- Probe: ES3DV3 - SN3250; ConvF(7.29, 7.29, 7.29); Calibrated: 3/13/2018;
- Sensor-Surface: 3mm (Mechanical Surface Detection)
- Electronics: DAE4 Sn874; Calibrated: 8/21/2017
- Phantom: ELI 4.0; Type: QD OVA 001 BB; Serial: 1057
- DASY52 52.10.0(1446); SEMCAD X 14.6.10(7417)

Configuration Body for IC-M85UL/Body Back, P=5W, d=0mm/Zoom Scan (7x7x7) (7x8x7)/Cube 0: Measurement grid: dx=5mm, dy=5mm, dz=5mm
Reference Value = 36.60 V/m; Power Drift = -0.44 dB
Peak SAR (extrapolated) = 1.92 W/kg
SAR(1 g) = 0.972 W/kg; SAR(10 g) = 0.642 W/kg (SAR corrected for target medium)
Maximum value of SAR (measured) = 1.16 W/kg

Configuration Body for IC-M85UL/Body Back, P=5W, d=0mm/Area Scan (61x111x1):
Interpolated grid: dx=1.500 mm, dy=1.500 mm
Maximum value of SAR (interpolated) = 1.02 W/kg

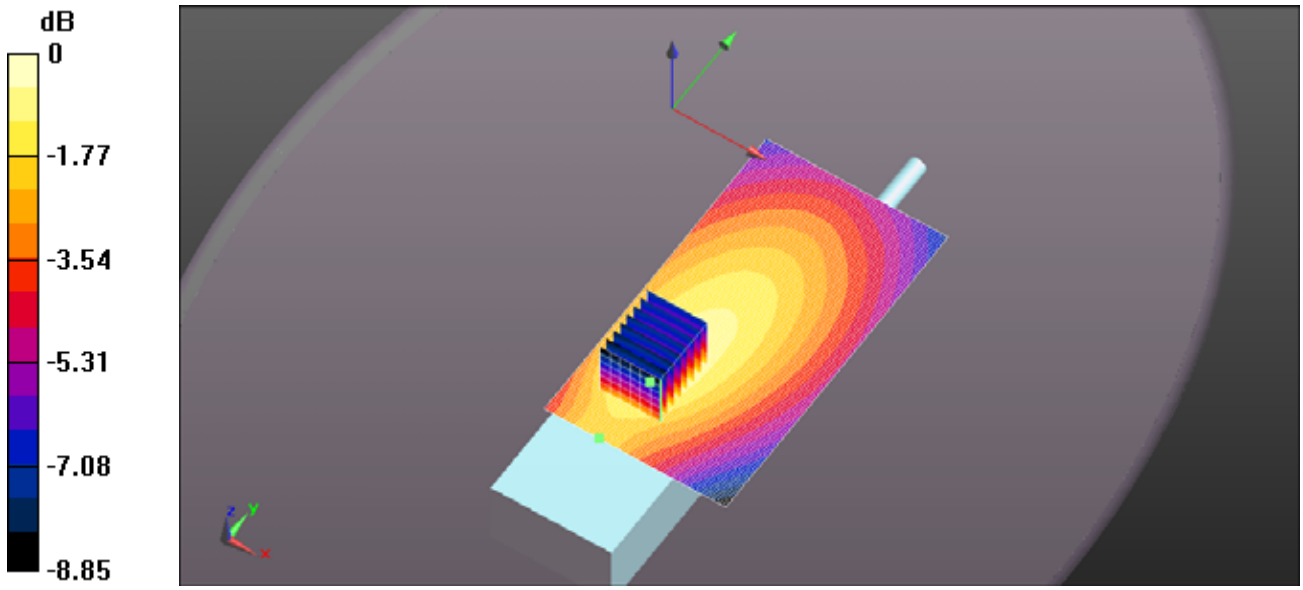

0 dB = 1.16 W/kg = 0.63 dBW/kg

Test Laboratory: Ultratech Group of Labs

FILE NAME: ICOM-490Q BODY FA-SC58V 157.425MHZ.DA52:0

DUT: IC-M85UL; Type: VHF Transceiver; Serial: 00000131

Communication System: UID 10000, CW; Frequency: 157.425 MHz; Duty Cycle: 1:1
Medium parameters used: f = 158 MHz; σ = 0.768 S/m; ε_r = 62.987; ρ = 1000 kg/m^3 ; Phantom section: Flat Section ; Measurement Standard: DASY5 (IEEE/IEC/ANSI C63.19-2011)

DASY Configuration:

- Probe: ES3DV3 - SN3250; ConvF(7.29, 7.29, 7.29); Calibrated: 3/13/2018;
- Sensor-Surface: 3mm (Mechanical Surface Detection)
- Electronics: DAE4 Sn874; Calibrated: 8/21/2017
- Phantom: ELI 4.0; Type: QD OVA 001 BB; Serial: 1057
- DASY52 52.10.0(1446); SEMCAD X 14.6.10(7417)

Configuration Body for IC-M85UL/Body Back, P=5W, d=0mm/Zoom Scan (7x7x7) (7x8x7)/Cube 0:

Measurement grid: dx=5mm, dy=5mm, dz=5mm
Reference Value = 40.15 V/m; Power Drift = -0.88 dB
Peak SAR (extrapolated) = 2.13 W/kg
SAR(1 g) = 1.08 W/kg; SAR(10 g) = 0.711 W/kg (SAR corrected for target medium)
Maximum value of SAR (measured) = 1.28 W/kg

Configuration Body for IC-M85UL/Body Back, P=5W, d=0mm/Area Scan (61x111x1):

Interpolated grid: dx=1.500 mm, dy=1.500 mm
Maximum value of SAR (interpolated) = 1.21 W/kg

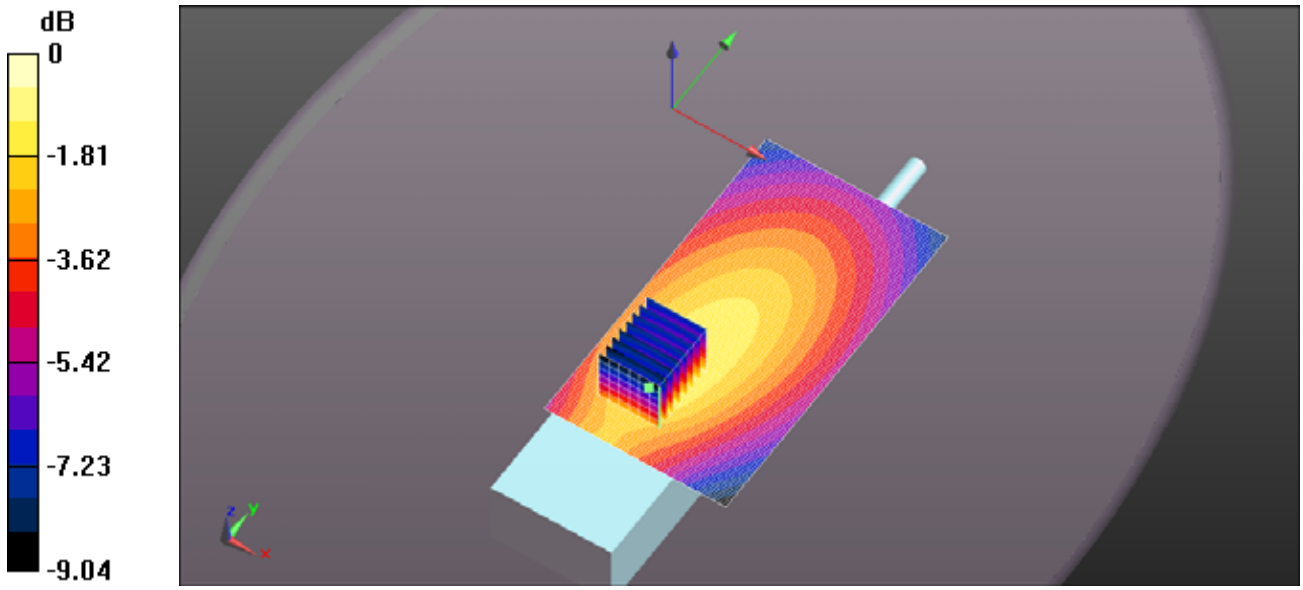

0 dB = 1.28 W/kg = 1.07 dBW/kg

Test Laboratory: Ultratech Group of Labs

FILE NAME: ICOM-490Q BODY FA-SC58V 161MHZ.DA52:0

DUT: IC-M85UL; Type: VHF Transceiver; Serial: 00000131

Communication System: UID 10000, CW; Frequency: 161 MHz; Duty Cycle: 1:1
Medium parameters used (interpolated): f = 161 MHz; σ = 0.77 S/m; ε_r = 63.033; ρ = 1000 kg/m^3 ;
Phantom section: Flat Section ; Measurement Standard: DASY5 (IEEE/IEC/ANSI C63.19-2011)

DASY Configuration:

- Probe: ES3DV3 - SN3250; ConvF(7.29, 7.29, 7.29); Calibrated: 3/13/2018;
- Sensor-Surface: 3mm (Mechanical Surface Detection)
- Electronics: DAE4 Sn874; Calibrated: 8/21/2017
- Phantom: ELI 4.0; Type: QD OVA 001 BB; Serial: 1057
- DASY52 52.10.0(1446); SEMCAD X 14.6.10(7417)

Configuration Body for IC-M85UL/Body Back, P=2W, d=0mm/Zoom Scan (7x7x7) (7x8x7)/Cube 0: Measurement grid: dx=5mm, dy=5mm, dz=5mm
Reference Value = 33.16 V/m; Power Drift = -0.29 dB
Peak SAR (extrapolated) = 1.53 W/kg
SAR(1 g) = 0.805 W/kg; SAR(10 g) = 0.543 W/kg (SAR corrected for target medium)
Maximum value of SAR (measured) = 0.950 W/kg

Configuration Body for IC-M85UL/Body Back, P=2W, d=0mm/Area Scan (61x111x1):
Interpolated grid: dx=1.500 mm, dy=1.500 mm
Maximum value of SAR (interpolated) = 0.872 W/kg

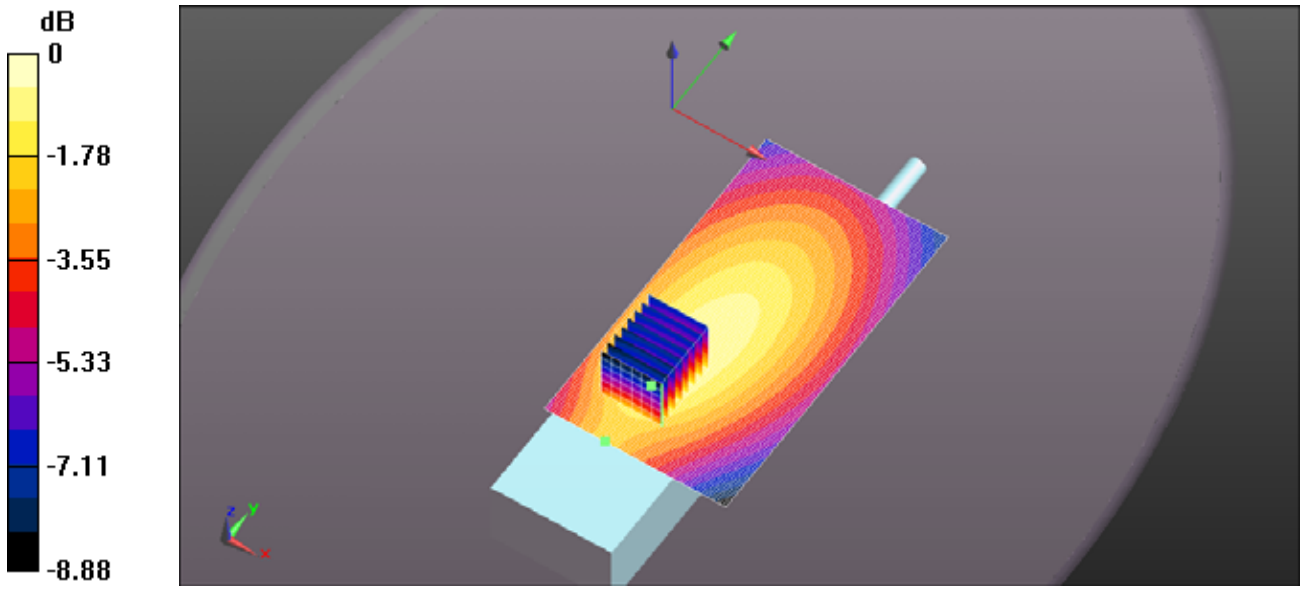

0 dB = 0.950 W/kg = -0.22 dBW/kg

Test Laboratory: Ultratech Group of Labs

FILE NAME: ICOM-490Q BODY FA-SC58V 168MHZ.DA52:0

DUT: IC-M85UL; Type: VHF Transceiver; Serial: 00000131

Communication System: UID 10000, CW; Frequency: 168 MHz; Duty Cycle: 1:1
Medium parameters used: f = 168 MHz; σ = 0.773 S/m; ε_r = 63.399; ρ = 1000 kg/m^3 ; Phantom section: Flat Section ; Measurement Standard: DASY5 (IEEE/IEC/ANSI C63.19-2011)

DASY Configuration:

- Probe: ES3DV3 - SN3250; ConvF(7.29, 7.29, 7.29); Calibrated: 3/13/2018;
- Sensor-Surface: 3mm (Mechanical Surface Detection)
- Electronics: DAE4 Sn874; Calibrated: 8/21/2017
- Phantom: ELI 4.0; Type: QD OVA 001 BB; Serial: 1057
- DASY52 52.10.0(1446); SEMCAD X 14.6.10(7417)

Configuration Body for IC-M85UL/Body Back, P=2W, d=0mm/Zoom Scan (7x7x7) (9x14x7)/Cube 0: Measurement grid: dx=5mm, dy=5mm, dz=5mm
Reference Value = 27.48 V/m; Power Drift = -0.36 dB
Peak SAR (extrapolated) = 0.884 W/kg
SAR(1 g) = 0.504 W/kg; SAR(10 g) = 0.373 W/kg (SAR corrected for target medium)
Maximum value of SAR (measured) = 0.583 W/kg

Configuration Body for IC-M85UL/Body Back, P=2W, d=0mm/Area Scan (61x111x1):
Interpolated grid: dx=1.500 mm, dy=1.500 mm
Maximum value of SAR (interpolated) = 0.560 W/kg

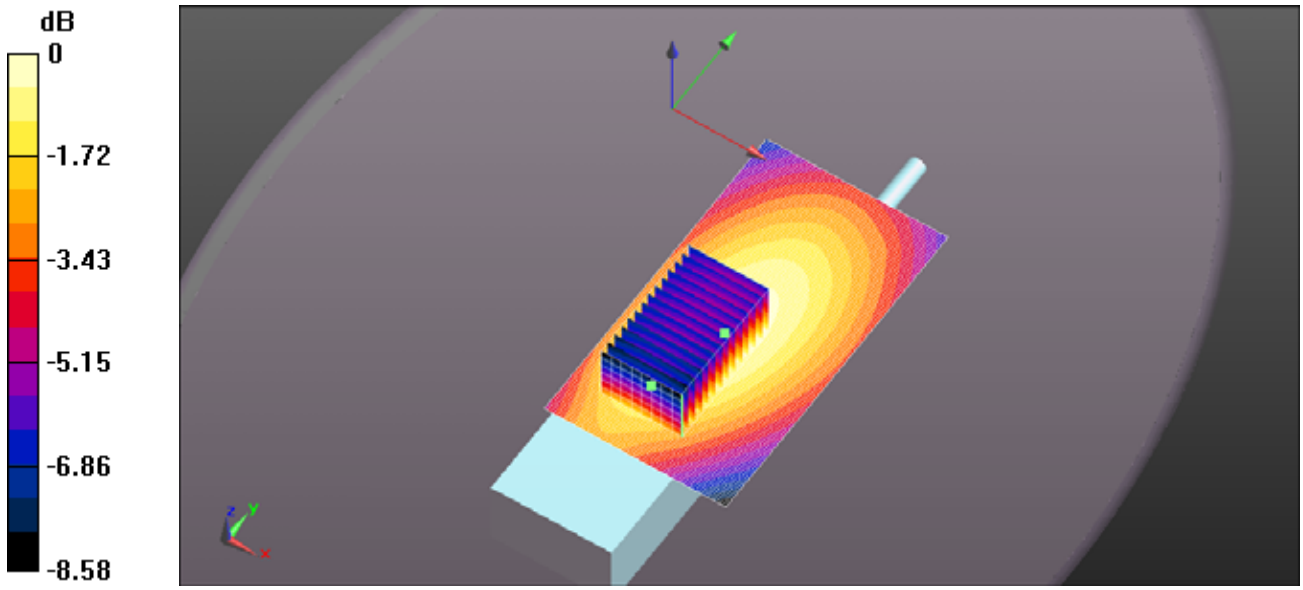

0 dB = 0.583 W/kg = -2.34 dBW/kg

Test Laboratory: Ultratech Group of Labs

FILE NAME: ICOM-490Q BODY FA-SC58V 174MHZ.DA52:0

DUT: IC-M85UL; Type: VHF Transceiver; Serial: 00000131

Communication System: UID 10000, CW; Frequency: 174 MHz; Duty Cycle: 1:1
Medium parameters used: f = 174 MHz; σ = 0.78 S/m; ε_r = 63.453; ρ = 1000 kg/m^3 ; Phantom section: Flat Section ; Measurement Standard: DASY5 (IEEE/IEC/ANSI C63.19-2011)

DASY Configuration:

- Probe: ES3DV3 - SN3250; ConvF(7.29, 7.29, 7.29); Calibrated: 3/13/2018;
- Sensor-Surface: 3mm (Mechanical Surface Detection)
- Electronics: DAE4 Sn874; Calibrated: 8/21/2017
- Phantom: ELI 4.0; Type: QD OVA 001 BB; Serial: 1057
- DASY52 52.10.0(1446); SEMCAD X 14.6.10(7417)

Configuration Body for IC-M85UL/Body Back, P=2W, d=0mm/Zoom Scan (7x7x7) (9x13x7)/Cube 0: Measurement grid: dx=5mm, dy=5mm, dz=5mm
Reference Value = 17.30 V/m; Power Drift = -0.17 dB
Peak SAR (extrapolated) = 0.373 W/kg
SAR(1 g) = 0.212 W/kg; SAR(10 g) = 0.158 W/kg (SAR corrected for target medium)
Maximum value of SAR (measured) = 0.246 W/kg

Configuration Body for IC-M85UL/Body Back, P=2W, d=0mm/Area Scan (61x111x1):
Interpolated grid: dx=1.500 mm, dy=1.500 mm
Maximum value of SAR (interpolated) = 0.232 W/kg

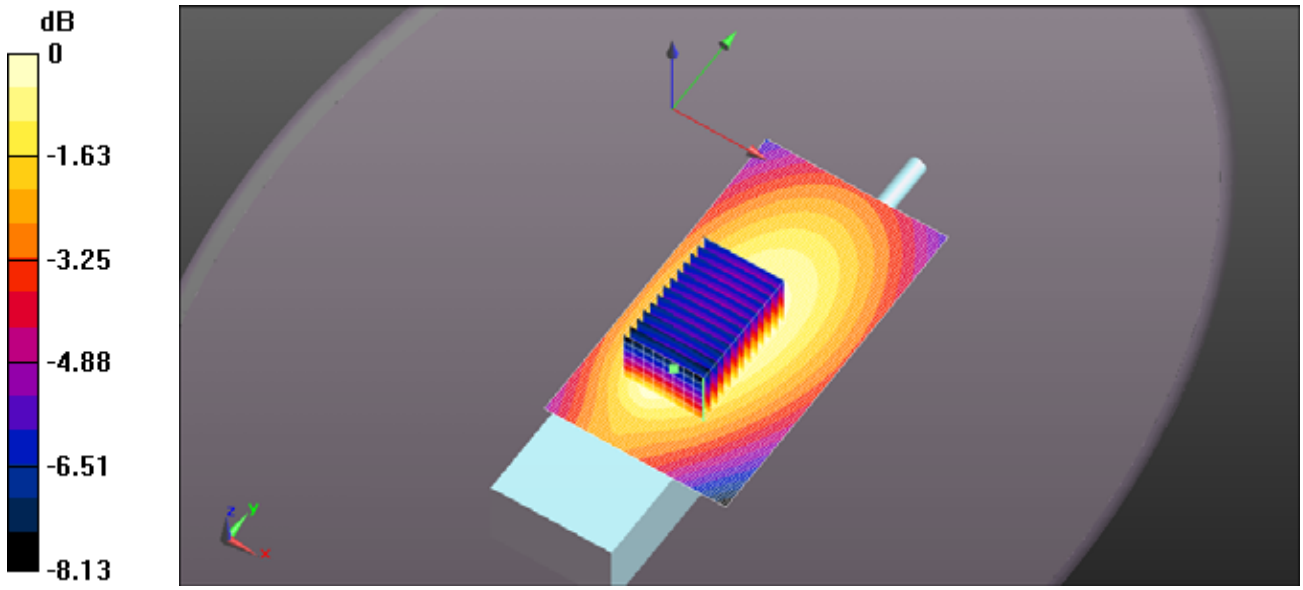

0 dB = 0.246 W/kg = -6.09 dBW/kg

EXHIBIT 3. BODY MEASUREMENT SUMMARY

Antenna	Power (W)	CH	CH. Freq (MHz)	BODY SAR1g (W/Kg) BP-292UL 2010(mAh)	BODY SAR10g (W/Kg) BP-292UL 2010(mAh)	Power Drift (dBm)
FA-SC58V 136-174 MHz	1.77	1	136	0.073	0.055	-0.11
	1.77	2	142	0.101	0.076	-0.69
	1.76	3	149	0.191	0.143	-0.75
	4.97	4	156.025	1.000	0.749	0.03
	4.90	5	157.425	1.210	0.908	0.04
	1.73	6	161	1.010	0.755	0.05
	1.76	7	168	1.040	0.775	0.05
	1.80	8	174	0.421	0.313	0.07

Test Laboratory: Ultratech Group of Labs

FILE NAME: ICOM-490Q HEAD FA-SC58V 136MHZ.DA52:0

DUT: IC-M85UL; Type: VHF Transceiver; Serial: 00000131

Communication System: UID 10000, CW; Frequency: 136 MHz; Duty Cycle: 1:1
Medium parameters used: f = 136 MHz; σ = 0.713 S/m; ε_r = 55.212; ρ = 1000 kg/m^3 ; Phantom section: Flat Section ; Measurement Standard: DASY5 (IEEE/IEC/ANSI C63.19-2011)

DASY Configuration:

- Probe: ES3DV3 - SN3250; ConvF(7.64, 7.64, 7.64); Calibrated: 3/13/2018;
- Sensor-Surface: 3mm (Mechanical Surface Detection)
- Electronics: DAE4 Sn874; Calibrated: 8/21/2017
- Phantom: ELI 4.0; Type: QD OVA 001 BB; Serial: 1057
- DASY52 52.10.0(1446); SEMCAD X 14.6.10(7417)

Configuration Head for IC-M85UL/Head Front, P=2W, d=25mm/Zoom Scan (7x7x7)

(7x7x7)/Cube 0: Measurement grid: dx=5mm, dy=5mm, dz=5mm
Reference Value = 9.883 V/m; Power Drift = -0.11 dB
Peak SAR (extrapolated) = 0.0980 W/kg
SAR(1 g) = 0.073 W/kg; SAR(10 g) = 0.055 W/kg (SAR corrected for target medium)
Maximum value of SAR (measured) = 0.0759 W/kg

Configuration Head for IC-M85UL/Head Front, P=2W, d=25mm/Area Scan (61x111x1):

Interpolated grid: dx=1.500 mm, dy=1.500 mm
Maximum value of SAR (interpolated) = 0.0766 W/kg

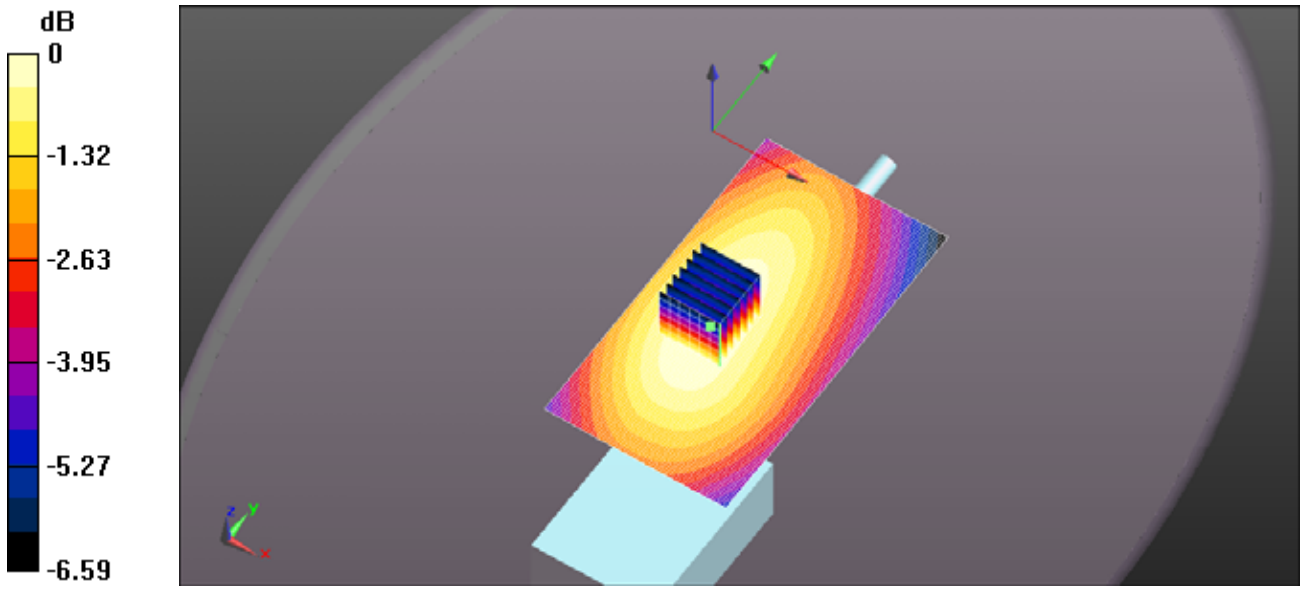

0 dB = 0.0759 W/kg = -11.20 dBW/kg

Test Laboratory: Ultratech Group of Labs

FILE NAME: ICOM-490Q HEAD FA-SC58V 142MHZ.DA52:0

DUT: IC-M85UL; Type: VHF Transceiver; Serial: 00000131

Communication System: UID 10000, CW; Frequency: 142 MHz; Duty Cycle: 1:1
Medium parameters used: f = 142 MHz; σ = 0.72 S/m; ε_r = 54.892; ρ = 1000 kg/m^3 ; Phantom section: Flat Section ; Measurement Standard: DASY5 (IEEE/IEC/ANSI C63.19-2011)

DASY Configuration:

- Probe: ES3DV3 - SN3250; ConvF(7.64, 7.64, 7.64); Calibrated: 3/13/2018;
- Sensor-Surface: 3mm (Mechanical Surface Detection)
- Electronics: DAE4 Sn874; Calibrated: 8/21/2017
- Phantom: ELI 4.0; Type: QD OVA 001 BB; Serial: 1057
- DASY52 52.10.0(1446); SEMCAD X 14.6.10(7417)

Configuration Head for IC-M85UL/Head Front, P=2W, d=25mm/Zoom Scan (7x7x7)

(7x7x7)/Cube 0: Measurement grid: dx=5mm, dy=5mm, dz=5mm
Reference Value = 12.24 V/m; Power Drift = -0.69 dB
Peak SAR (extrapolated) = 0.138 W/kg
SAR(1 g) = 0.101 W/kg; SAR(10 g) = 0.076 W/kg (SAR corrected for target medium)
Maximum value of SAR (measured) = 0.107 W/kg

Configuration Head for IC-M85UL/Head Front, P=2W, d=25mm/Area Scan (61x111x1):

Interpolated grid: dx=1.500 mm, dy=1.500 mm
Maximum value of SAR (interpolated) = 0.108 W/kg

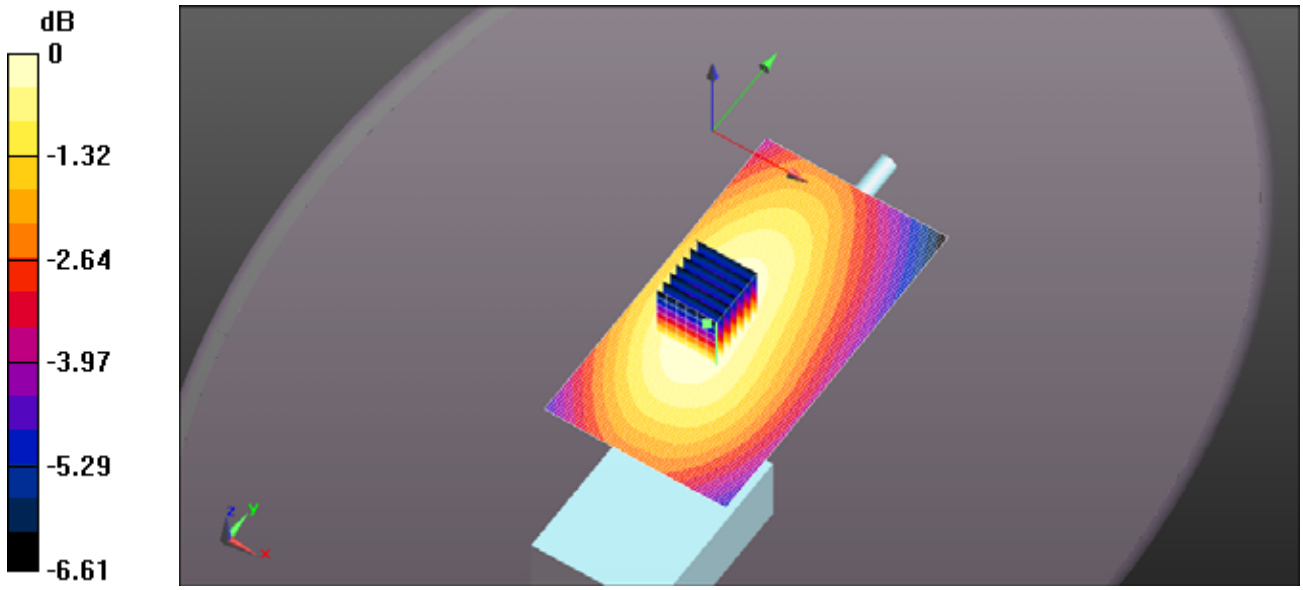

0 dB = 0.107 W/kg = -9.72 dBW/kg

Test Laboratory: Ultratech Group of Labs

FILE NAME: ICOM-490Q HEAD FA-SC58V 149MHZ.DA52:0

DUT: IC-M85UL; Type: VHF Transceiver; Serial: 00000131

Communication System: UID 10000, CW; Frequency: 149 MHz; Duty Cycle: 1:1
Medium parameters used (interpolated): f = 149 MHz; σ = 0.728 S/m; ε_r = 54.809; ρ = 1000 kg/m^3 ;
Phantom section: Flat Section ; Measurement Standard: DASY5 (IEEE/IEC/ANSI C63.19-2011)

DASY Configuration:

- Probe: ES3DV3 - SN3250; ConvF(7.64, 7.64, 7.64); Calibrated: 3/13/2018;
- Sensor-Surface: 3mm (Mechanical Surface Detection)
- Electronics: DAE4 Sn874; Calibrated: 8/21/2017
- Phantom: ELI 4.0; Type: QD OVA 001 BB; Serial: 1057
- DASY52 52.10.0(1446); SEMCAD X 14.6.10(7417)

Configuration Head for IC-M85UL/Head Front, P=2W, d=25mm/Zoom Scan (7x7x7)

(7x7x7)/Cube 0: Measurement grid: dx=5mm, dy=5mm, dz=5mm
Reference Value = 16.61 V/m; Power Drift = -0.75 dB
Peak SAR (extrapolated) = 0.265 W/kg
SAR(1 g) = 0.191 W/kg; SAR(10 g) = 0.143 W/kg (SAR corrected for target medium)
Maximum value of SAR (measured) = 0.204 W/kg

Configuration Head for IC-M85UL/Head Front, P=2W, d=25mm/Area Scan (61x111x1):

Interpolated grid: dx=1.500 mm, dy=1.500 mm
Maximum value of SAR (interpolated) = 0.207 W/kg

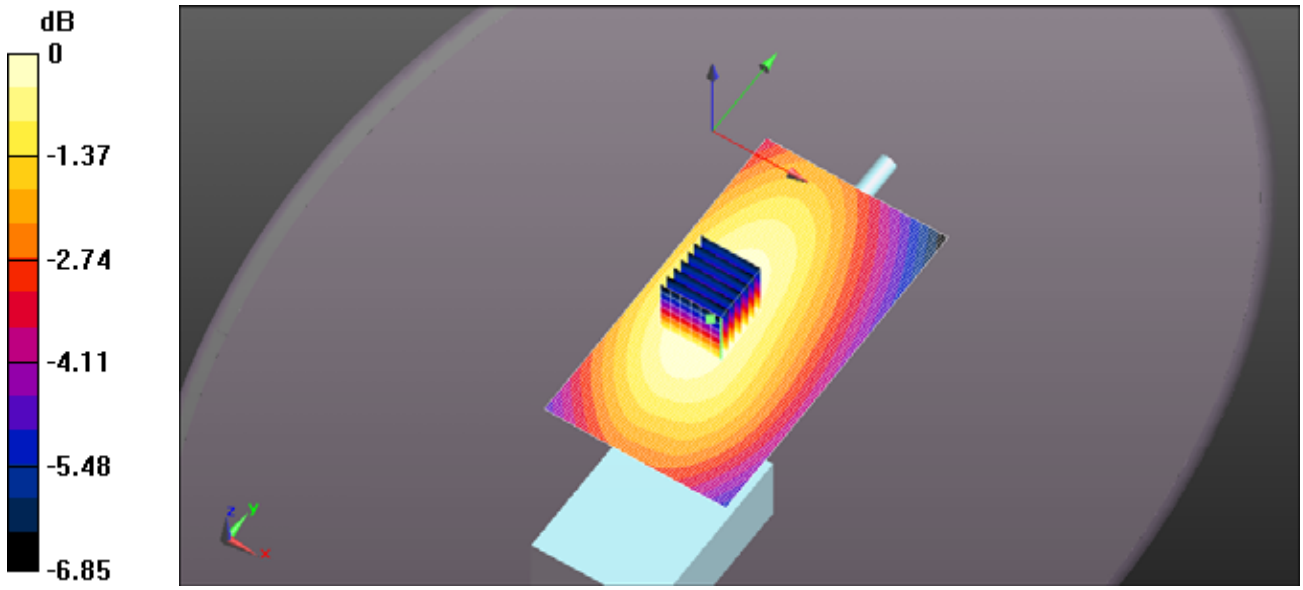

0 dB = 0.204 W/kg = -6.90 dBW/kg

Test Laboratory: Ultratech Group of Labs

FILE NAME: ICOM-490Q HEAD FA-SC58V 156.025MHZ.DA52:0

DUT: IC-M85UL; Type: VHF Transceiver; Serial: 00000131

Communication System: UID 10000, CW; Frequency: 156.025 MHz; Duty Cycle: 1:1
Medium parameters used (interpolated): f = 156.025 MHz; σ = 0.737 S/m; ε_r = 54.804; ρ = 1000 kg/m^3 ;
Phantom section: Flat Section ; Measurement Standard: DASY5 (IEEE/IEC/ANSI C63.19-2011)

DASY Configuration:

- Probe: ES3DV3 - SN3250; ConvF(7.64, 7.64, 7.64); Calibrated: 3/13/2018;
- Sensor-Surface: 3mm (Mechanical Surface Detection)
- Electronics: DAE4 Sn874; Calibrated: 8/21/2017
- Phantom: ELI 4.0; Type: QD OVA 001 BB; Serial: 1057
- DASY52 52.10.0(1446); SEMCAD X 14.6.10(7417)

Configuration Head for IC-M85UL/Head Front, P=5W, d=25mm/Zoom Scan (7x7x7)

(7x7x7)/Cube 0: Measurement grid: dx=5mm, dy=5mm, dz=5mm
Reference Value = 34.61 V/m; Power Drift = 0.03 dB
Peak SAR (extrapolated) = 1.39 W/kg
SAR(1 g) = 1.000 W/kg; SAR(10 g) = 0.749 W/kg (SAR corrected for target medium)
Maximum value of SAR (measured) = 1.07 W/kg

Configuration Head for IC-M85UL/Head Front, P=5W, d=25mm/Area Scan (61x111x1):

Interpolated grid: dx=1.500 mm, dy=1.500 mm
Maximum value of SAR (interpolated) = 1.07 W/kg

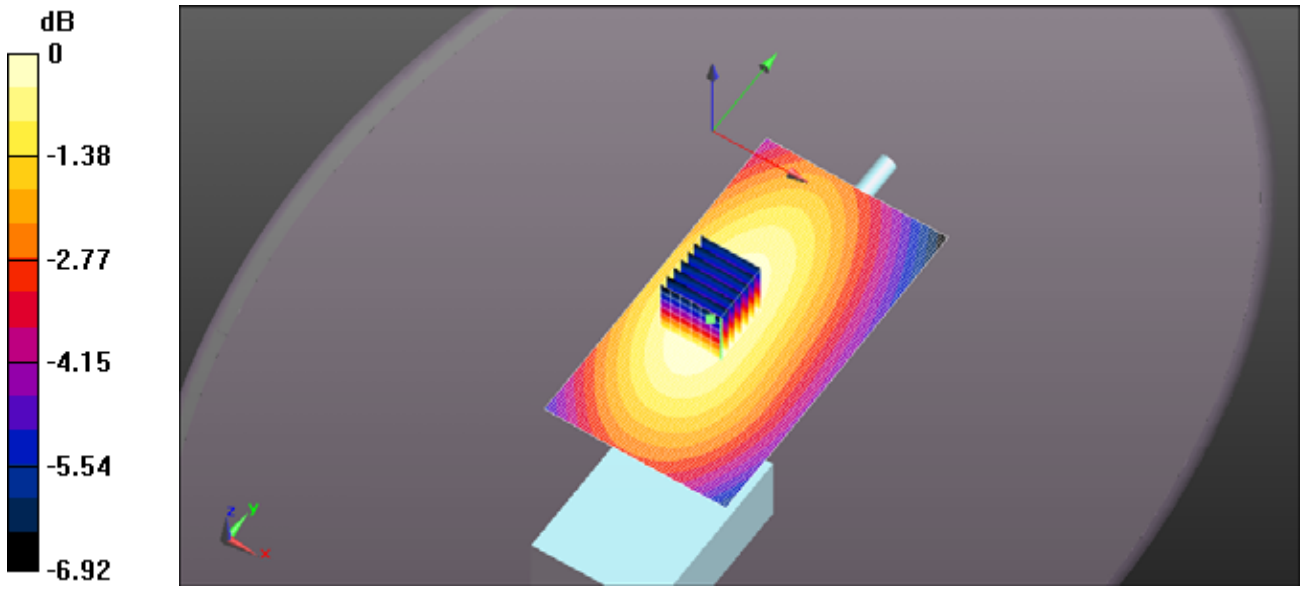

0 dB = 1.07 W/kg = 0.31 dBW/kg

Test Laboratory: Ultratech Group of Labs

FILE NAME: ICOM-490Q HEAD FA-SC58V 157.425MHZ.DA52:0

DUT: IC-M85UL; Type: VHF Transceiver; Serial: 00000131

Communication System: UID 10000, CW; Frequency: 157.425 MHz; Duty Cycle: 1:1
Medium parameters used: f = 158 MHz; σ = 0.738 S/m; ε_r = 54.791; ρ = 1000 kg/m^3 ; Phantom section: Flat Section ; Measurement Standard: DASY5 (IEEE/IEC/ANSI C63.19-2011)

DASY Configuration:

- Probe: ES3DV3 - SN3250; ConvF(7.64, 7.64, 7.64); Calibrated: 3/13/2018;
- Sensor-Surface: 3mm (Mechanical Surface Detection)
- Electronics: DAE4 Sn874; Calibrated: 8/21/2017
- Phantom: ELI 4.0; Type: QD OVA 001 BB; Serial: 1057
- DASY52 52.10.0(1446); SEMCAD X 14.6.10(7417)

Configuration Head for IC-M85UL/Head Front, P=5W, d=25mm/Zoom Scan (7x7x7)

(7x7x7)/Cube 0: Measurement grid: dx=5mm, dy=5mm, dz=5mm
Reference Value = 38.31 V/m; Power Drift = 0.04 dB
Peak SAR (extrapolated) = 1.69 W/kg
SAR(1 g) = 1.21 W/kg; SAR(10 g) = 0.908 W/kg (SAR corrected for target medium)
Maximum value of SAR (measured) = 1.31 W/kg

Configuration Head for IC-M85UL/Head Front, P=5W, d=25mm/Area Scan (61x111x1):

Interpolated grid: dx=1.500 mm, dy=1.500 mm
Maximum value of SAR (interpolated) = 1.31 W/kg

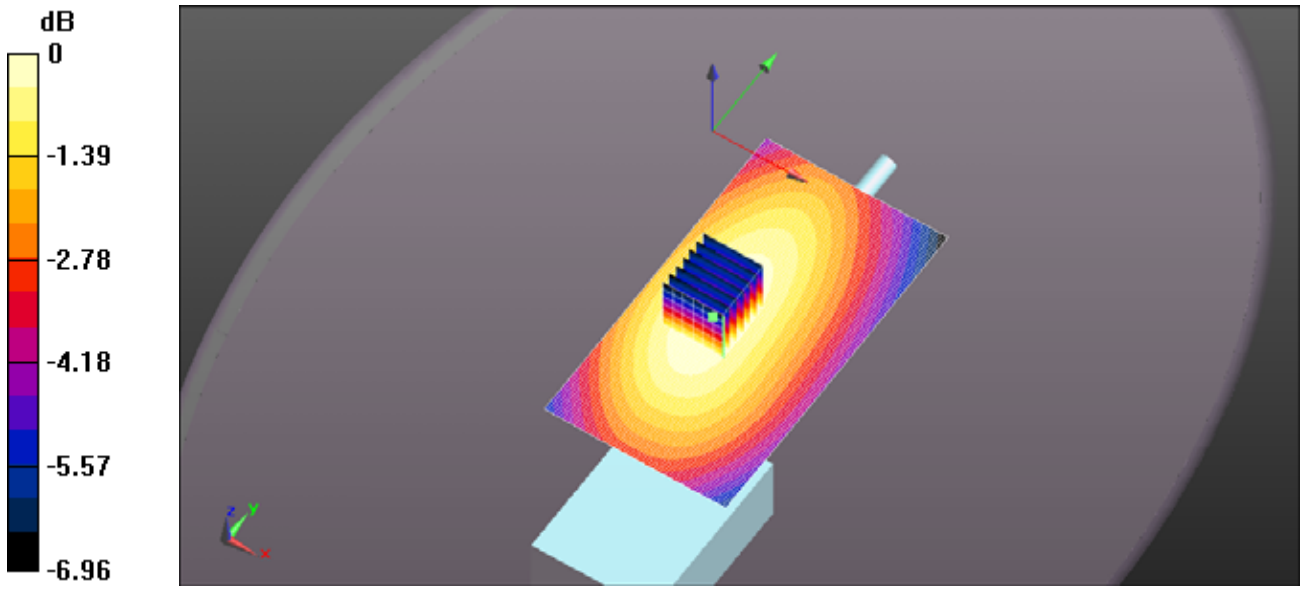

0 dB = 1.31 W/kg = 1.16 dBW/kg

Test Laboratory: Ultratech Group of Labs

FILE NAME: ICOM-490Q HEAD FA-SC58V 161MHZ.DA52:0

DUT: IC-M85UL; Type: VHF Transceiver; Serial: 00000131

Communication System: UID 10000, CW; Frequency: 161 MHz; Duty Cycle: 1:1
Medium parameters used (interpolated): f = 161 MHz; σ = 0.742 S/m; ε_r = 54.816; ρ = 1000 kg/m^3 ;
Phantom section: Flat Section ; Measurement Standard: DASY5 (IEEE/IEC/ANSI C63.19-2011)

DASY Configuration:

- Probe: ES3DV3 - SN3250; ConvF(7.64, 7.64, 7.64); Calibrated: 3/13/2018;
- Sensor-Surface: 3mm (Mechanical Surface Detection)
- Electronics: DAE4 Sn874; Calibrated: 8/21/2017
- Phantom: ELI 4.0; Type: QD OVA 001 BB; Serial: 1057
- DASY52 52.10.0(1446); SEMCAD X 14.6.10(7417)

Configuration Head for IC-M85UL/Head Front, P=2W, d=25mm/Zoom Scan (7x7x7)

(7x7x7)/Cube 0: Measurement grid: dx=5mm, dy=5mm, dz=5mm
Reference Value = 34.69 V/m; Power Drift = 0.05 dB
Peak SAR (extrapolated) = 1.41 W/kg
SAR(1 g) = 1.01 W/kg; SAR(10 g) = 0.755 W/kg (SAR corrected for target medium)
Maximum value of SAR (measured) = 1.09 W/kg

Configuration Head for IC-M85UL/Head Front, P=2W, d=25mm/Area Scan (61x111x1):

Interpolated grid: dx=1.500 mm, dy=1.500 mm
Maximum value of SAR (interpolated) = 1.09 W/kg

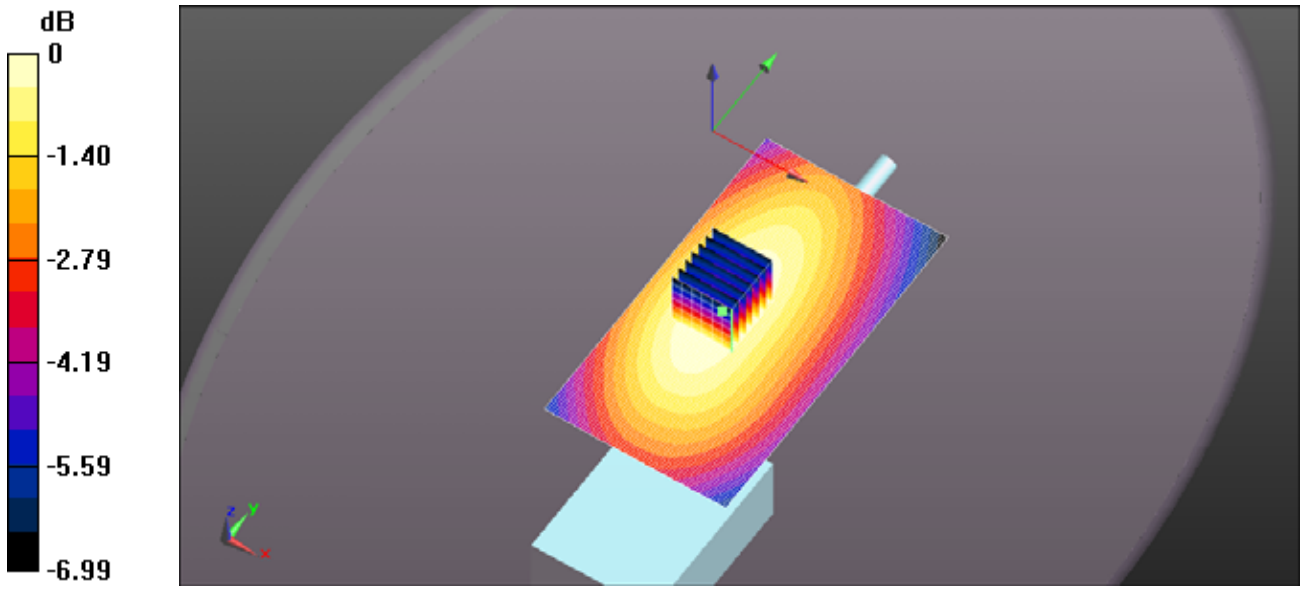

0 dB = 1.09 W/kg = 0.38 dBW/kg

Test Laboratory: Ultratech Group of Labs

FILE NAME: ICOM-490Q HEAD FA-SC58V 168MHZ.DA52:0

DUT: IC-M85UL; Type: VHF Transceiver; Serial: 00000131

Communication System: UID 10000, CW; Frequency: 168 MHz; Duty Cycle: 1:1
Medium parameters used: f = 168 MHz; σ = 0.751 S/m; ε_r = 54.874; ρ = 1000 kg/m^3 ; Phantom section: Flat Section ; Measurement Standard: DASY5 (IEEE/IEC/ANSI C63.19-2011)

DASY Configuration:

- Probe: ES3DV3 - SN3250; ConvF(7.64, 7.64, 7.64); Calibrated: 3/13/2018;
- Sensor-Surface: 3mm (Mechanical Surface Detection)
- Electronics: DAE4 Sn874; Calibrated: 8/21/2017
- Phantom: ELI 4.0; Type: QD OVA 001 BB; Serial: 1057
- DASY52 52.10.0(1446); SEMCAD X 14.6.10(7417)

Configuration Head for IC-M85UL/Head Front, P=2W, d=25mm/Zoom Scan (7x7x7) (7x8x7)/Cube 0: Measurement grid: dx=5mm, dy=5mm, dz=5mm
Reference Value = 33.99 V/m; Power Drift = 0.05 dB
Peak SAR (extrapolated) = 1.45 W/kg
SAR(1 g) = 1.04 W/kg; SAR(10 g) = 0.775 W/kg (SAR corrected for target medium)
Maximum value of SAR (measured) = 1.12 W/kg

Configuration Head for IC-M85UL/Head Front, P=2W, d=25mm/Area Scan (61x111x1):
Interpolated grid: dx=1.500 mm, dy=1.500 mm
Maximum value of SAR (interpolated) = 1.13 W/kg

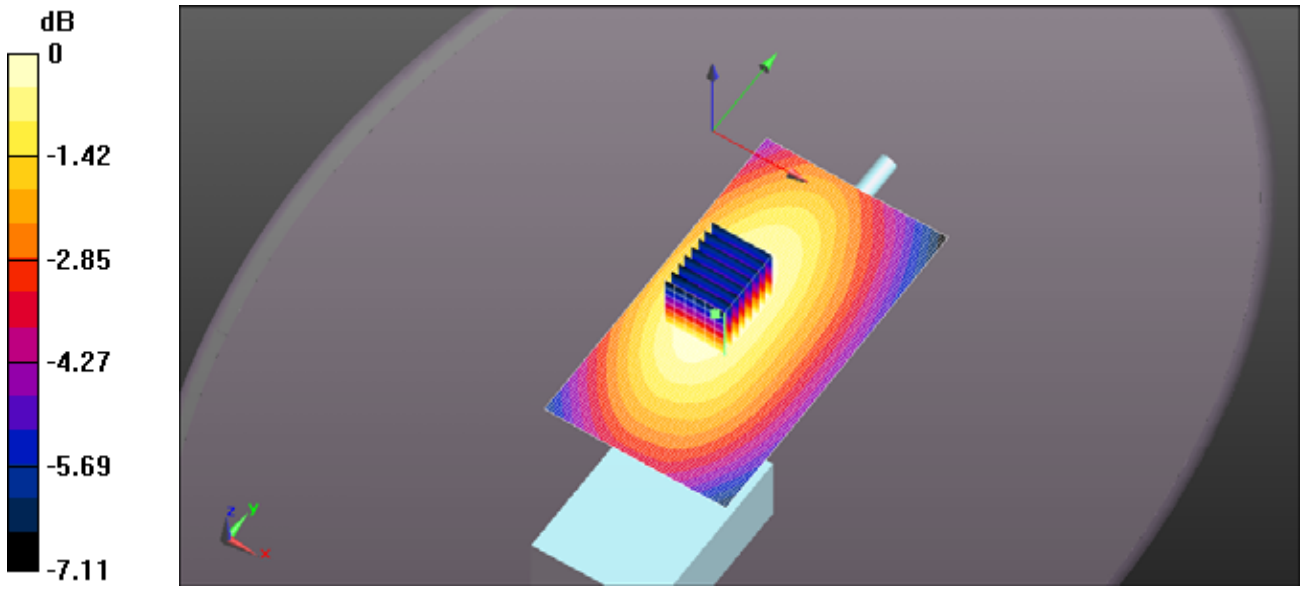

0 dB = 1.12 W/kg = 0.50 dBW/kg

Test Laboratory: Ultratech Group of Labs

FILE NAME: ICOM-490Q HEAD FA-SC58V 174MHZ.DA52:0

DUT: IC-M85UL; Type: VHF Transceiver; Serial: 00000131

Communication System: UID 10000, CW; Frequency: 174 MHz; Duty Cycle: 1:1
Medium parameters used: f = 174 MHz; σ = 0.756 S/m; ε_r = 54.552; ρ = 1000 kg/m^3 ; Phantom section: Flat Section ; Measurement Standard: DASY5 (IEEE/IEC/ANSI C63.19-2011)

DASY Configuration:

- Probe: ES3DV3 - SN3250; ConvF(7.64, 7.64, 7.64); Calibrated: 3/13/2018;
- Sensor-Surface: 3mm (Mechanical Surface Detection)
- Electronics: DAE4 Sn874; Calibrated: 8/21/2017
- Phantom: ELI 4.0; Type: QD OVA 001 BB; Serial: 1057
- DASY52 52.10.0(1446); SEMCAD X 14.6.10(7417)

Configuration Head for IC-M85UL/Head Front, P=2W, d=25mm/Zoom Scan (7x7x7) (7x8x7)/Cube 0: Measurement grid: dx=5mm, dy=5mm, dz=5mm
Reference Value = 21.16 V/m; Power Drift = 0.07 dB
Peak SAR (extrapolated) = 0.590 W/kg
SAR(1 g) = 0.421 W/kg; SAR(10 g) = 0.313 W/kg (SAR corrected for target medium)
Maximum value of SAR (measured) = 0.455 W/kg

Configuration Head for IC-M85UL/Head Front, P=2W, d=25mm/Area Scan (61x111x1):
Interpolated grid: dx=1.500 mm, dy=1.500 mm
Maximum value of SAR (interpolated) = 0.456 W/kg

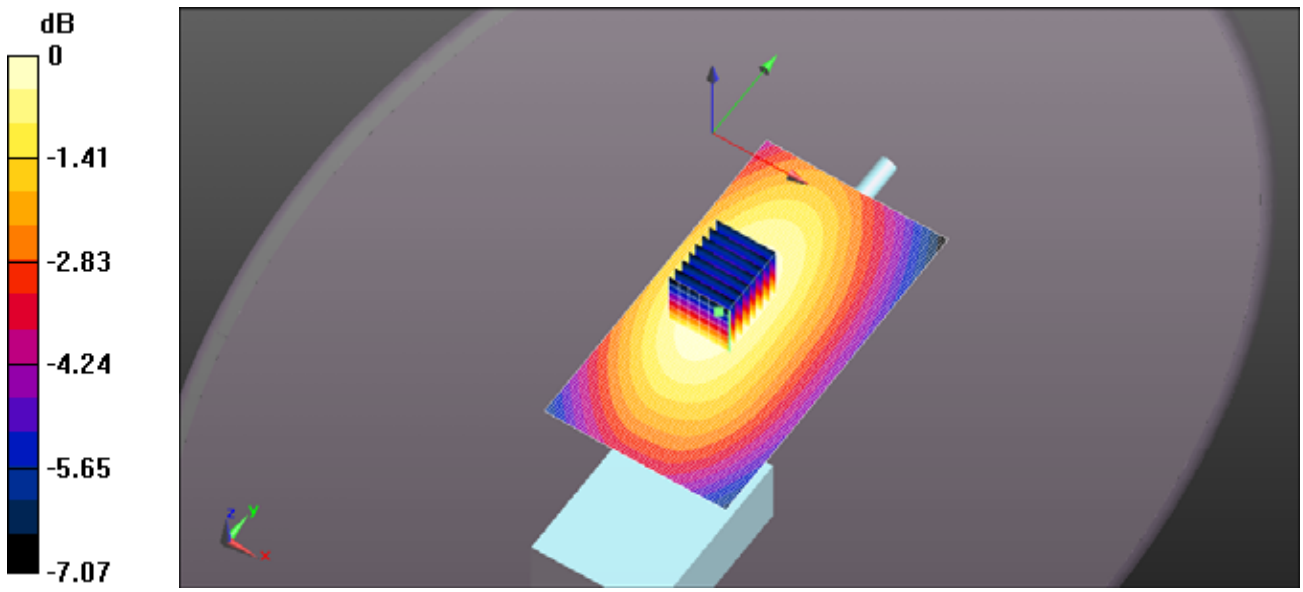

0 dB = 0.455 W/kg = -3.42 dBW/kg