APPENDIX 1

SAR Measurement Data

3000 Bristol Circle, Oakville, Ontario, Canada L6H 6G4
Tel. #: 905-829-1570, Fax. #: 905-829-8050, Email: vic@ultratech-labs.com, Website: http://www.ultratech-labs.com

Table of content

EXHIBIT 1. HEAD 150 MHZ SAR MEASUREMENTS (BP-292UL) 3

HEAD 150 MHZ SAR MEASUREMENT SUMMARY 3
File Name: ICOM-590Q Head IC-M85UL FA-SC58V 136.050MHz.da52:0 4
File Name: ICOM-590Q Head IC-M85UL FA-SC58V 155.050MHz.da52:0 5
File Name: ICOM-590Q Head IC-M85UL FA-SC58V 156.050MHz.da52:0 6
File Name: ICOM-590Q Head IC-M85UL FA-SC58V 156.400MHz.da52:0 7
File Name: ICOM-590Q Head IC-M85UL FA-SC58V 157.025MHz.da52:0 8
File Name: ICOM-590Q Head IC-M85UL FA-SC58V 157.425MHz.da52:0 9
File Name: ICOM-590Q Head IC-M85UL FA-SC58V 173.95MHz.da52:0 10

EXHIBIT 2. BODY 150 MHZ SAR MEASUREMENTS (BP-292UL) 11

BODY 150 MHZ SAR MEASUREMENT SUMMARY 11
File Name: ICOM-590Q Body IC-M85UL FA-SC58V 136.05MHz.da52:0 12
File Name: ICOM-590Q Body IC-M85UL FA-SC58V 155.05MHz.da52:0 13
File Name: ICOM-590Q Body IC-M85UL FA-SC58V 156.05MHz.da52:0 14
File Name: ICOM-590Q Body IC-M85UL FA-SC58V 156.40MHz.da52:0 15
File Name: ICOM-590Q Body IC-M85UL FA-SC58V 157.025MHz.da52:0 16
File Name: ICOM-590Q Body IC-M85UL FA-SC58V 157.425MHz.da52:0 17
File Name: ICOM-590Q Body IC-M85UL FA-SC58V 173.95MHz.da52:0 18

EXHIBIT 3. PRESCAN FOR MB-136 BELT CLIP(BP-292UL) 19

File Name: ICOM-590Q (MB-136 Prescan) Body IC-M85UL FA-SC58V 173.95MHz.da52:0 19

EXHIBIT 1. HEAD 150 MHZ SAR MEASUREMENTS (BP-292UL)

HEAD 150 MHZ SAR MEASUREMENT SUMMARY

Antenna	Power (W)	CH	CH. Freq (MHz)	HEAD SAR1g (W/Kg) BP-292UL 1910mAh	HEAD SAR10g (W/Kg) BP-292UL 1910mAh	Power Drift (dB)
FA-SC58V	4.900	F4	136.050	0.104	0.079	-0.04
	4.950	F5	155.050	0.526	0.395	-0.06
	4.950	1001	156.050	0.595	0.446	-0.03
	4.850	8	156.400	0.474	0.357	-0.03
	4.840	1080	157.025	0.598	0.448	0
	4.860	88	157.425	0.758	0.567	-0.04
	4.980	F6	173.950	1.020	0.757	-0.01

3000 Bristol Circle, Oakville, Ontario, Canada L6H 6G4
Tel. #: 905-829-1570, Fax. #: 905-829-8050, Email: vic@ultratech-labs.com, Website: http://www.ultratech-labs.com

File Name: ICOM-590Q Head IC-M85UL FA-SC58V 136.050MHz.da52:0

DUT: ICOM IC-M85UL; Type: VHF Marine Transceiver; Serial: 00000305

Communication System: UID 0, CW (0); Frequency: 136.05 MHz; Duty Cycle: 1:1
Medium parameters used: f = 136.05 MHz; σ = 0.783 S/m; ε_r = 52.444; ρ = 1000 kg/m^3 ; Phantom section: Flat Section ; Measurement Standard: DASY5 (IEEE/IEC/ANSI C63.19-2011)

DASY Configuration:

- Probe: ES3DV3 - SN3208; ConvF(7.51, 7.51, 7.51); Calibrated: 3/18/2022;
- Sensor-Surface: 3mm (Mechanical Surface Detection)
- Electronics: DAE4 Sn874; Calibrated: 8/25/2022
- Phantom: ELI 4.0; Type: QD OVA 001 BB; Serial: 1057
- DASY52 52.10.0(1446); SEMCAD X 14.6.10(7417)

Configuration_Head_IC-M85UL/Head Front, P=5W,d=25mm, (SAR corrected for target medium)/Area Scan (51x161x1): Interpolated grid: dx=1.500 mm, dy=1.500 mm
Maximum value of SAR (interpolated) = 0.116 W/kg

Configuration_Head_IC-M85UL/Head Front, P=5W,d=25mm,(SAR corrected for target medium)/Zoom Scan (7x7x7) (7x7x7)/Cube 0: Measurement grid: dx=7.5mm, dy=7.5mm, dz=7.5mm
Reference Value = 11.26 V/m; Power Drift = -0.04 dB
Peak SAR (extrapolated) = 0.152 W/kg
SAR(1 g) = 0.104 W/kg; SAR(10 g) = 0.079 W/kg (SAR corrected for target medium)
Maximum value of SAR (measured) = 0.116 W/kg

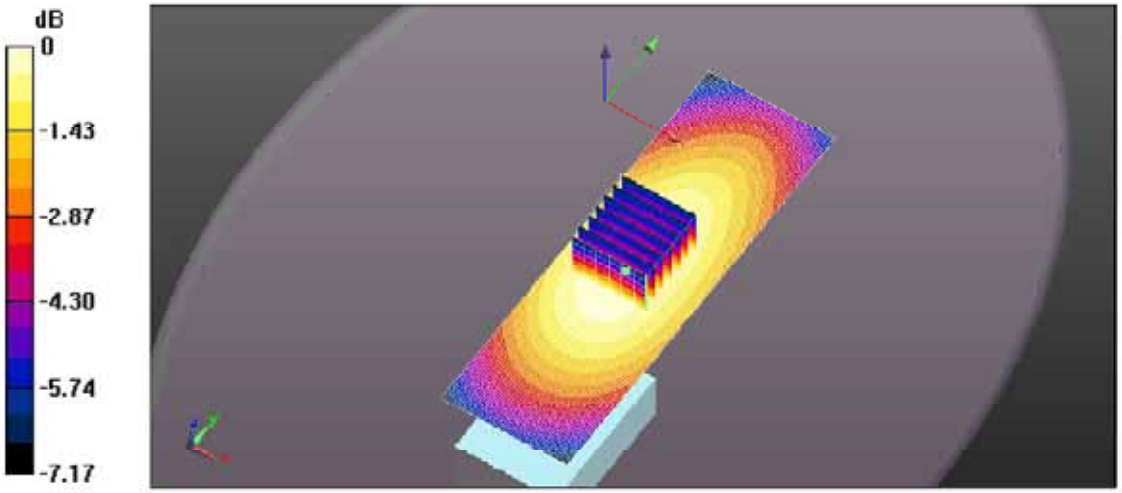

0 dB = 0.116 W/kg = -9.35 dBW/kg

File Name: ICOM-590Q Head IC-M85UL FA-SC58V 155.050MHz.da52:0

DUT: ICOM IC-M85UL; Type: VHF Marine Transceiver; Serial: 00000305

Communication System: UID 0, CW (0); Frequency: 155.05 MHz; Duty Cycle: 1:1
Medium parameters used: f = 155.05 MHz; σ = 0.796 S/m; ε_r = 52.619; ρ = 1000 kg/m^3 ; Phantom section: Flat Section ; Measurement Standard: DASY5 (IEEE/IEC/ANSI C63.19-2011)

DASY Configuration:

- Probe: ES3DV3 - SN3208; ConvF(7.51, 7.51, 7.51); Calibrated: 3/18/2022;
- Sensor-Surface: 3mm (Mechanical Surface Detection)
- Electronics: DAE4 Sn874; Calibrated: 8/25/2022
- Phantom: ELI 4.0; Type: QD OVA 001 BB; Serial: 1057
- DASY52 52.10.0(1446); SEMCAD X 14.6.10(7417)

Configuration_Head_IC-M85UL/Head Front, P=5W,d=25mm, (SAR corrected for target medium)/Area Scan (51x161x1): Interpolated grid: dx=1.500 mm, dy=1.500 mm
Maximum value of SAR (interpolated) = 0.588 W/kg

Configuration_Head_IC-M85UL/Head Front, P=5W,d=25mm,(SAR corrected for target medium)/Zoom Scan (7x7x7) (7x7x7)/Cube 0: Measurement grid: dx=7.5mm, dy=7.5mm, dz=7.5mm
Reference Value = 24.33 V/m; Power Drift = -0.06 dB
Peak SAR (extrapolated) = 0.774 W/kg
SAR(1 g) = 0.526 W/kg; SAR(10 g) = 0.395 W/kg (SAR corrected for target medium)
Maximum value of SAR (measured) = 0.589 W/kg

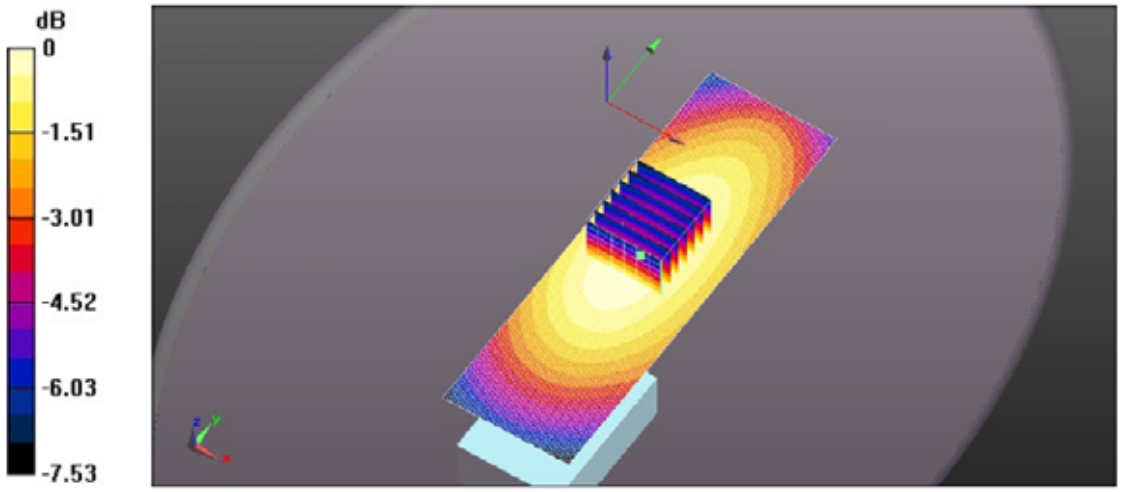

0 dB = 0.589 W/kg = -2.30 dBW/kg

File Name: ICOM-590Q Head IC-M85UL FA-SC58V 156.050MHz.da52:0

DUT: ICOM IC-M85UL; Type: VHF Marine Transceiver; Serial: 00000305

Communication System: UID 0, CW (0); Frequency: 156.05 MHz; Duty Cycle: 1:1
Medium parameters used: f = 156.05 MHz; σ = 0.796 S/m; ε_r = 51.618; ρ = 1000 kg/m^3 ; Phantom section: Flat Section ; Measurement Standard: DASY5 (IEEE/IEC/ANSI C63.19-2011)

DASY Configuration:

- Probe: ES3DV3 - SN3208; ConvF(7.51, 7.51, 7.51); Calibrated: 3/18/2022;
- Sensor-Surface: 3mm (Mechanical Surface Detection)
- Electronics: DAE4 Sn874; Calibrated: 8/25/2022
- Phantom: ELI 4.0; Type: QD OVA 001 BB; Serial: 1057
- DASY52 52.10.0(1446); SEMCAD X 14.6.10(7417)

Configuration_Head_IC-M85UL/Head Front, P=5W,d=25mm, (SAR corrected for target medium)/Area Scan (51x161x1): Interpolated grid: dx=1.500 mm, dy=1.500 mm
Maximum value of SAR (interpolated) = 0.666 W/kg

Configuration_Head_IC-M85UL/Head Front, P=5W,d=25mm,(SAR corrected for target medium)/Zoom Scan (7x7x7) (7x7x7)/Cube 0: Measurement grid: dx=7.5mm, dy=7.5mm, dz=7.5mm
Reference Value = 25.48 V/m; Power Drift = -0.03 dB
Peak SAR (extrapolated) = 0.875 W/kg
SAR(1 g) = 0.595 W/kg; SAR(10 g) = 0.446 W/kg (SAR corrected for target medium)
Maximum value of SAR (measured) = 0.664 W/kg

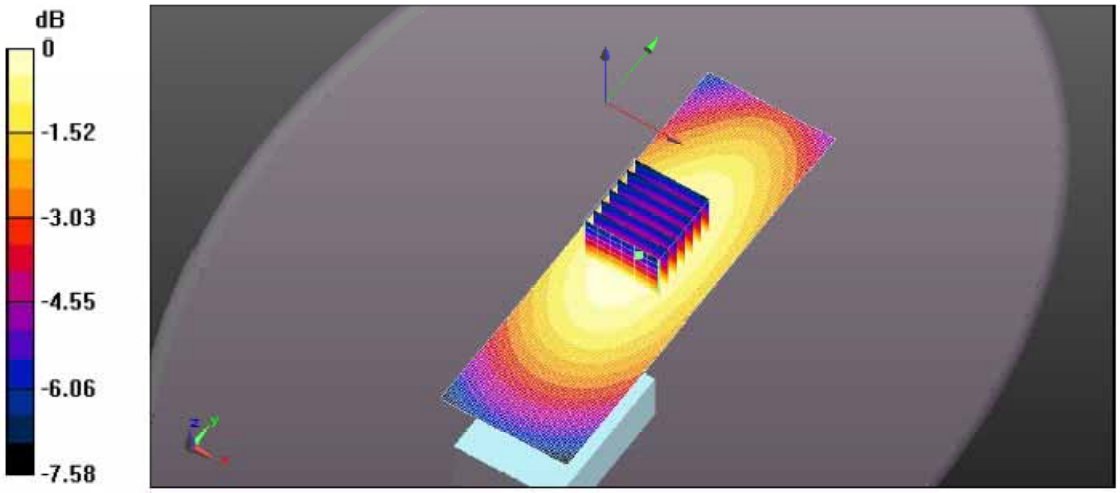

0 dB = 0.664 W/kg = -1.78 dBW/kg

File Name: ICOM-590Q Head IC-M85UL FA-SC58V 156.400MHz.da52:0

DUT: ICOM IC-M85UL; Type: VHF Marine Transceiver; Serial: 00000305

Communication System: UID 0, CW (0); Frequency: 156.4 MHz; Duty Cycle: 1:1
Medium parameters used: f = 156.4 MHz; σ = 0.796 S/m; ε_r = 51.616; ρ = 1000 kg/m^3 ; Phantom section: Flat Section ; Measurement Standard: DASY5 (IEEE/IEC/ANSI C63.19-2011)

DASY Configuration:

- Probe: ES3DV3 - SN3208; ConvF(7.51, 7.51, 7.51); Calibrated: 3/18/2022;
- Sensor-Surface: 3mm (Mechanical Surface Detection)
- Electronics: DAE4 Sn874; Calibrated: 8/25/2022
- Phantom: ELI 4.0; Type: QD OVA 001 BB; Serial: 1057
- DASY52 52.10.0(1446); SEMCAD X 14.6.10(7417)

Configuration_Head_IC-M85UL/Head Front, P=5W,d=25mm, (SAR corrected for target medium)/Area Scan (51x161x1): Interpolated grid: dx=1.500 mm, dy=1.500 mm
Maximum value of SAR (interpolated) = 0.529 W/kg

Configuration_Head_IC-M85UL/Head Front, P=5W,d=25mm,(SAR corrected for target medium)/Zoom Scan (7x7x7) (7x7x7)/Cube 0: Measurement grid: dx=7.5mm, dy=7.5mm, dz=7.5mm
Reference Value = 23.54 V/m; Power Drift = -0.03 dB
Peak SAR (extrapolated) = 0.696 W/kg
SAR(1 g) = 0.474 W/kg; SAR(10 g) = 0.357 W/kg (SAR corrected for target medium)
Maximum value of SAR (measured) = 0.529 W/kg

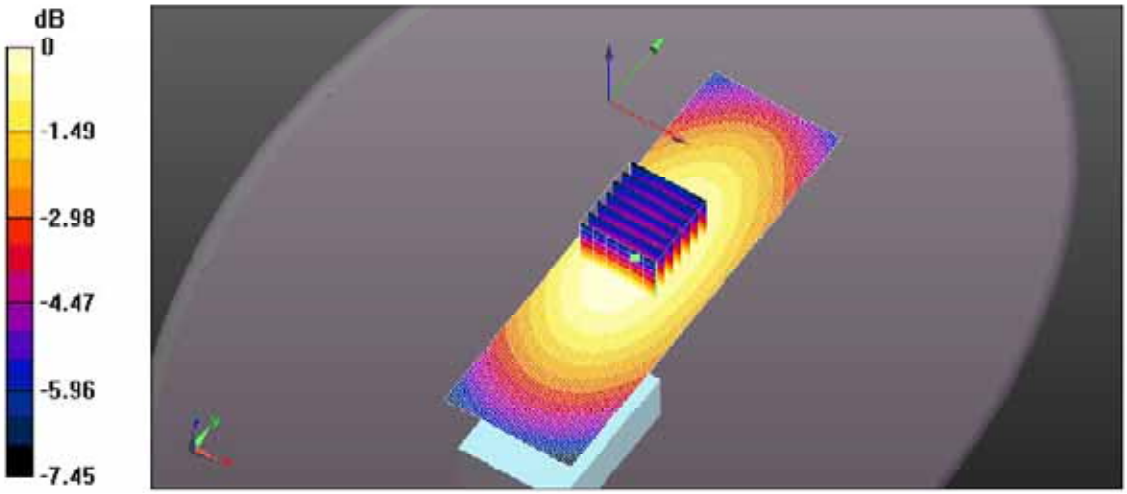

0 dB = 0.529 W/kg = -2.77 dBW/kg

File Name: ICOM-590Q Head IC-M85UL FA-SC58V 157.025MHz.da52:0

DUT: ICOM IC-M85UL; Type: VHF Marine Transceiver; Serial: 00000305

Communication System: UID 0, CW (0); Frequency: 157.025 MHz; Duty Cycle: 1:1
Medium parameters used: f = 158 MHz; σ = 0.798 S/m; ε_r = 51.606; ρ = 1000 kg/m^3 ; Phantom section: Flat Section ; Measurement Standard: DASY5 (IEEE/IEC/ANSI C63.19-2011)

DASY Configuration:

- Probe: ES3DV3 - SN3208; ConvF(7.51, 7.51, 7.51); Calibrated: 3/18/2022;
- Sensor-Surface: 3mm (Mechanical Surface Detection)
- Electronics: DAE4 Sn874; Calibrated: 8/25/2022
- Phantom: ELI 4.0; Type: QD OVA 001 BB; Serial: 1057
- DASY52 52.10.0(1446); SEMCAD X 14.6.10(7417)

Configuration_Head_IC-M85UL/Head Front, P=5W,d=25mm, (SAR corrected for target medium)/Area Scan (51x161x1): Interpolated grid: dx=1.500 mm, dy=1.500 mm
Maximum value of SAR (interpolated) = 0.668 W/kg

Configuration_Head_IC-M85UL/Head Front, P=5W,d=25mm,(SAR corrected for target medium)/Zoom Scan (7x7x7) (7x7x7)/Cube 0: Measurement grid: dx=7.5mm, dy=7.5mm, dz=7.5mm
Reference Value = 26.40 V/m; Power Drift = 0.00 dB
Peak SAR (extrapolated) = 0.881 W/kg
SAR(1 g) = 0.598 W/kg; SAR(10 g) = 0.448 W/kg (SAR corrected for target medium)
Maximum value of SAR (measured) = 0.669 W/kg

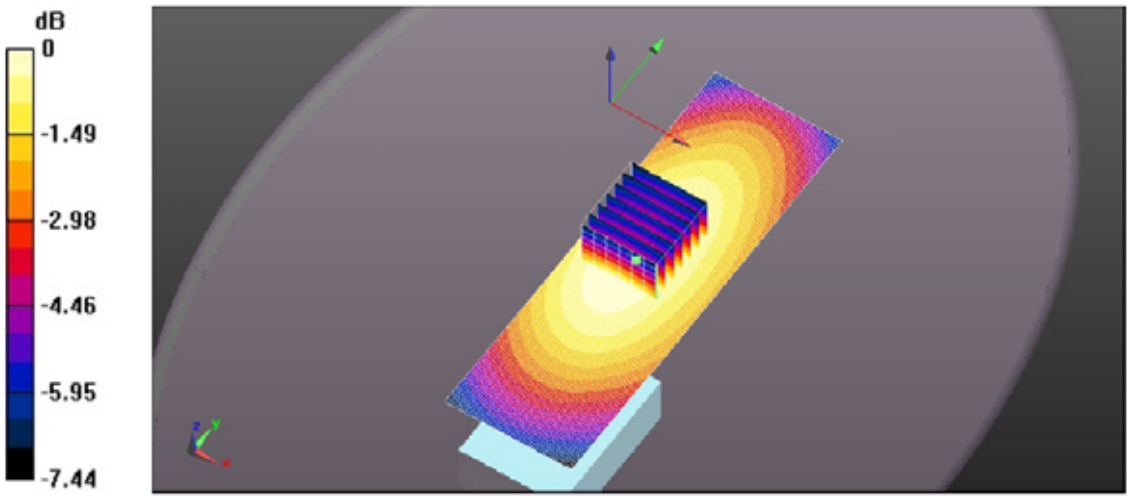

0 dB = 0.669 W/kg = -1.74 dBW/kg

File Name: ICOM-590Q Head IC-M85UL FA-SC58V 157.425MHz.da52:0

DUT: ICOM IC-M85UL; Type: VHF Marine Transceiver; Serial: 00000305

Communication System: UID 0, CW (0); Frequency: 157.425 MHz; Duty Cycle: 1:1
Medium parameters used: f = 158 MHz; σ = 0.798 S/m; ε_r = 51.606; ρ = 1000 kg/m^3 ; Phantom section: Flat Section ; Measurement Standard: DASY5 (IEEE/IEC/ANSI C63.19-2011)

DASY Configuration:

- Probe: ES3DV3 - SN3208; ConvF(7.51, 7.51, 7.51); Calibrated: 3/18/2022;
- Sensor-Surface: 3mm (Mechanical Surface Detection)
- Electronics: DAE4 Sn874; Calibrated: 8/25/2022
- Phantom: ELI 4.0; Type: QD OVA 001 BB; Serial: 1057
- DASY52 52.10.0(1446); SEMCAD X 14.6.10(7417)

Configuration_Head_IC-M85UL/Head Front, P=5W,d=25mm, (SAR corrected for target medium)/Area Scan (51x161x1): Interpolated grid: dx=1.500 mm, dy=1.500 mm
Maximum value of SAR (interpolated) = 0.846 W/kg

Configuration_Head_IC-M85UL/Head Front, P=5W,d=25mm,(SAR corrected for target medium)/Zoom Scan (7x7x7) (7x7x7)/Cube 0: Measurement grid: dx=7.5mm, dy=7.5mm, dz=7.5mm
Reference Value = 29.55 V/m; Power Drift = -0.04 dB
Peak SAR (extrapolated) = 1.12 W/kg
SAR(1 g) = 0.758 W/kg; SAR(10 g) = 0.567 W/kg (SAR corrected for target medium)
Maximum value of SAR (measured) = 0.849 W/kg

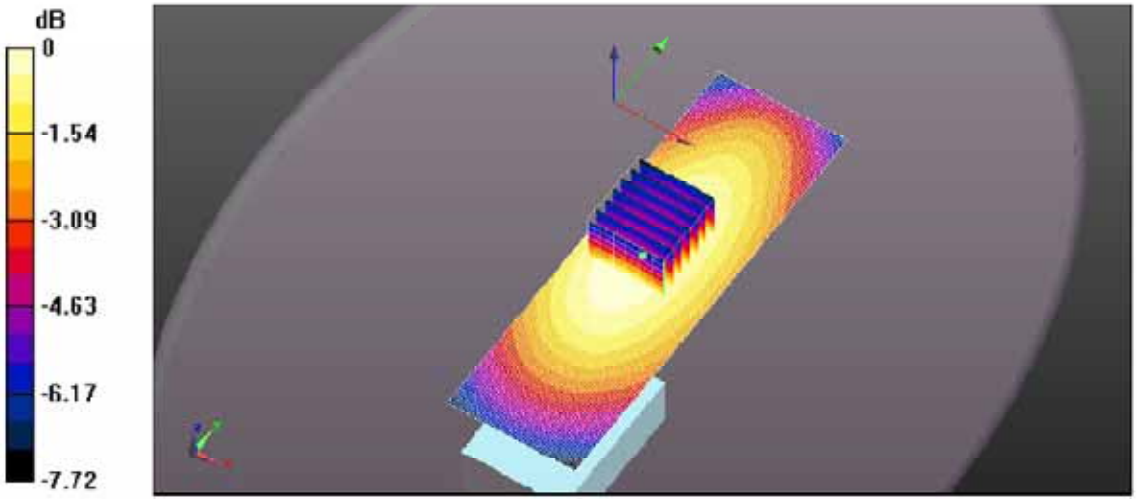

0 dB = 0.849 W/kg = -0.71 dBW/kg

File Name: ICOM-590Q Head IC-M85UL FA-SC58V 173.95MHz.da52:0

DUT: ICOM IC-M85UL; Type: VHF Marine Transceiver; Serial: 00000305

Communication System: UID 0, CW (0); Frequency: 173.95 MHz; Duty Cycle: 1:1
Medium parameters used: f = 174 MHz; σ = 0.812 S/m; ε_r = 50.899; ρ = 1000 kg/m^3 ; Phantom section: Flat Section ; Measurement Standard: DASY5 (IEEE/IEC/ANSI C63.19-2011)

DASY Configuration:

- Probe: ES3DV3 - SN3208; ConvF(7.51, 7.51, 7.51); Calibrated: 3/18/2022;
- Sensor-Surface: 3mm (Mechanical Surface Detection)
- Electronics: DAE4 Sn874; Calibrated: 8/25/2022
- Phantom: ELI 4.0; Type: QD OVA 001 BB; Serial: 1057
- DASY52 52.10.0(1446); SEMCAD X 14.6.10(7417)

Configuration_Head_IC-M85UL/Head Front, P=5W,d=25mm, (SAR corrected for target medium)/Area Scan (51x161x1): Interpolated grid: dx=1.500 mm, dy=1.500 mm
Maximum value of SAR (interpolated) = 1.14 W/kg

Configuration_Head_IC-M85UL/Head Front, P=5W,d=25mm,(SAR corrected for target medium)/Zoom Scan (7x7x7) (7x7x7)/Cube 0: Measurement grid: dx=7.5mm, dy=7.5mm, dz=7.5mm
Reference Value = 31.95 V/m; Power Drift = -0.01 dB
Peak SAR (extrapolated) = 1.51 W/kg
SAR(1 g) = 1.02 W/kg; SAR(10 g) = 0.757 W/kg (SAR corrected for target medium)
Maximum value of SAR (measured) = 1.14 W/kg

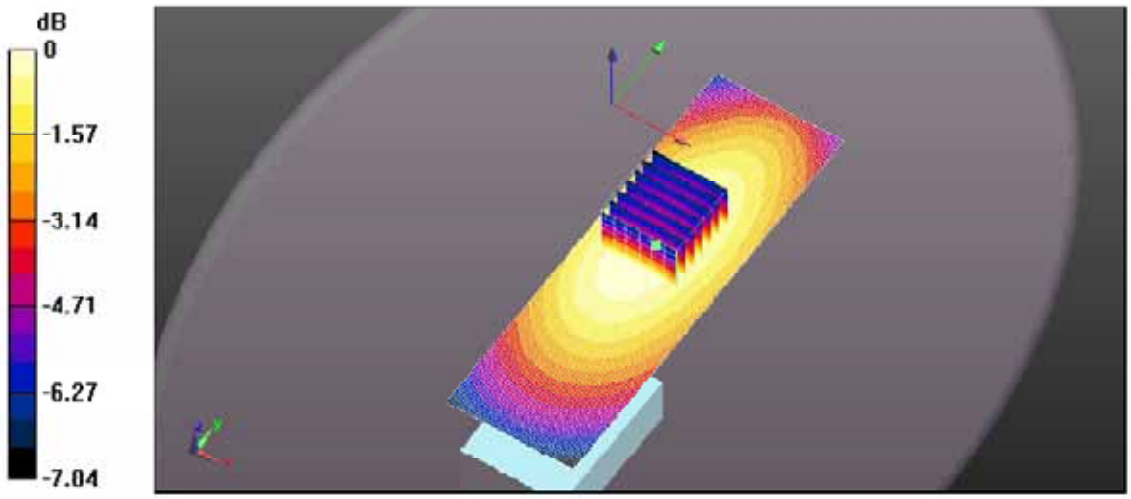

0 dB = 1.14 W/kg = 0.58 dBW/kg

EXHIBIT 2. BODY 150 MHZ SAR MEASUREMENTS (BP-292UL)

BODY 150 MHZ SAR MEASUREMENT SUMMARY

Antenna	Power (W)	CH	CH. Freq (MHz)	BODY SAR1g (W/Kg) MBB-3 & BP-292UL 1910mAh	BODY SAR10g (W/Kg) MBB3 & BP-292UL 1910mAh	Power Drift (dB)
FA-SC58V	4.900	F4	136.050	0.203	0.146	-0.1
	4.950	F5	155.050	0.654	0.432	-0.04
	4.950	1001	156.050	0.811	0.549	-0.05
	4.850	8	156.400	0.877	0.599	-0.06
	4.840	1080	157.025	0.96	0.658	-0.07
	4.860	88	157.425	0.871	0.586	-0.06
	4.980	F6	173.950	0.527	0.394	-0.07

3000 Bristol Circle, Oakville, Ontario, Canada L6H 6G4
Tel. #: 905-829-1570, Fax. #: 905-829-8050, Email: vic@ultratech-labs.com, Website: http://www.ultratech-labs.com

File Name: ICOM-590Q Body IC-M85UL FA-SC58V 136.05MHz.da52:0

DUT: ICOM IC-M85UL; Type: VHF Marine Transceiver; Serial: 00000305

Communication System: UID 0, CW (0); Frequency: 136.05 MHz; Duty Cycle: 1:1
Medium parameters used: f = 136.05 MHz; σ = 0.828 S/m; ε_r = 59.472; ρ = 1000 kg/m^3 ; Phantom section: Flat Section ; Measurement Standard: DASY5 (IEEE/IEC/ANSI C63.19-2011)

DASY Configuration:

- Probe: ES3DV3 - SN3208; ConvF(7.36, 7.36, 7.36); Calibrated: 3/18/2022;
- Sensor-Surface: 3mm (Mechanical Surface Detection)
- Electronics: DAE4 Sn874; Calibrated: 8/25/2022
- Phantom: ELI 4.0; Type: QD OVA 001 BB; Serial: 1057
- DASY52 52.10.0(1446); SEMCAD X 14.6.10(7417)

Configuration_Body_IC-M85UL/Body Back, P=5W,d=0mm, (SAR corrected for target medium)/Area Scan (61x161x1): Interpolated grid: dx=1.500 mm, dy=1.500 mm
Maximum value of SAR (interpolated) = 0.234 W/kg

Configuration_Body_IC-M85UL/Body Back, P=5W,d=0mm,(SAR corrected for target medium)/Zoom Scan (7x7x7) (7x7x7)/Cube 0: Measurement grid: dx=7.5mm, dy=7.5mm, dz=5mm
Reference Value = 13.78 V/m; Power Drift = -0.10 dB
Peak SAR (extrapolated) = 0.311 W/kg
SAR(1 g) = 0.203 W/kg; SAR(10 g) = 0.146 W/kg (SAR corrected for target medium)
Maximum value of SAR (measured) = 0.231 W/kg

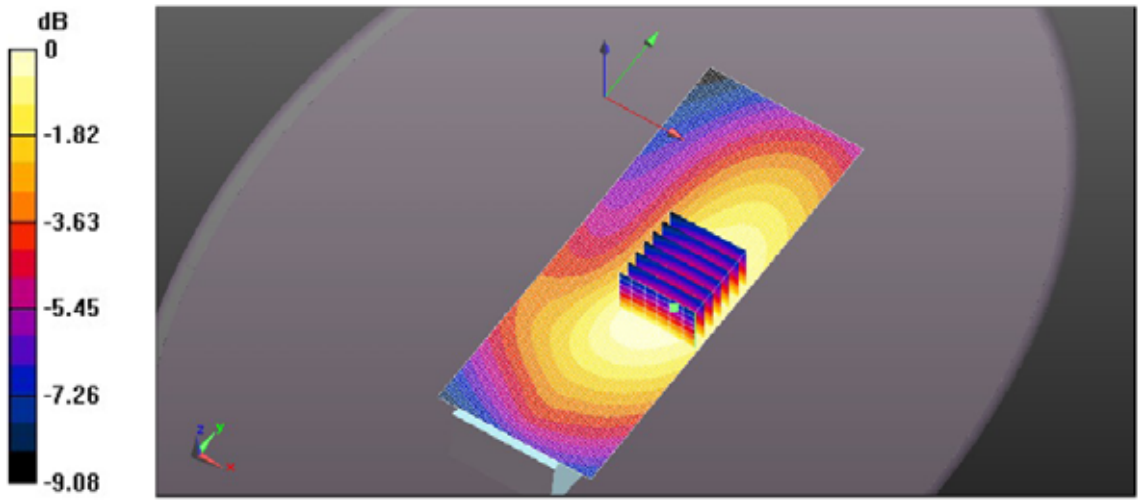

0 dB = 0.231 W/kg = -6.37 dBW/kg

File Name: ICOM-590Q Body IC-M85UL FA-SC58V 155.05MHz.da52:0

DUT: ICOM IC-M85UL; Type: VHF Marine Transceiver; Serial: 00000305

Communication System: UID 0, CW (0); Frequency: 155.05 MHz; Duty Cycle: 1:1
Medium parameters used: f = 156 MHz; σ = 0.839 S/m; ε_r = 59.122; ρ = 1000 kg/m^3 ; Phantom section: Flat Section ; Measurement Standard: DASY5 (IEEE/IEC/ANSI C63.19-2011)

DASY Configuration:

- Probe: ES3DV3 - SN3208; ConvF(7.36, 7.36, 7.36); Calibrated: 3/18/2022;
- Sensor-Surface: 3mm (Mechanical Surface Detection)
- Electronics: DAE4 Sn874; Calibrated: 8/25/2022
- Phantom: ELI 4.0; Type: QD OVA 001 BB; Serial: 1057
- DASY52 52.10.0(1446); SEMCAD X 14.6.10(7417)

Configuration_Body_IC-M85UL/Body Back, P=5W,d=0mm, (SAR corrected for target medium)/Area Scan (51x161x1): Interpolated grid: dx=1.500 mm, dy=1.500 mm
Maximum value of SAR (interpolated) = 0.724 W/kg

Configuration_Body_IC-M85UL/Body Back, P=5W,d=0mm,(SAR corrected for target medium)/Zoom Scan (7x7x7) (7x7x7)/Cube 0: Measurement grid: dx=7.5mm, dy=7.5mm, dz=5mm
Reference Value = 29.18 V/m; Power Drift = -0.04 dB
Peak SAR (extrapolated) = 1.25 W/kg
SAR(1 g) = 0.654 W/kg; SAR(10 g) = 0.432 W/kg (SAR corrected for target medium)
Maximum value of SAR (measured) = 0.751 W/kg

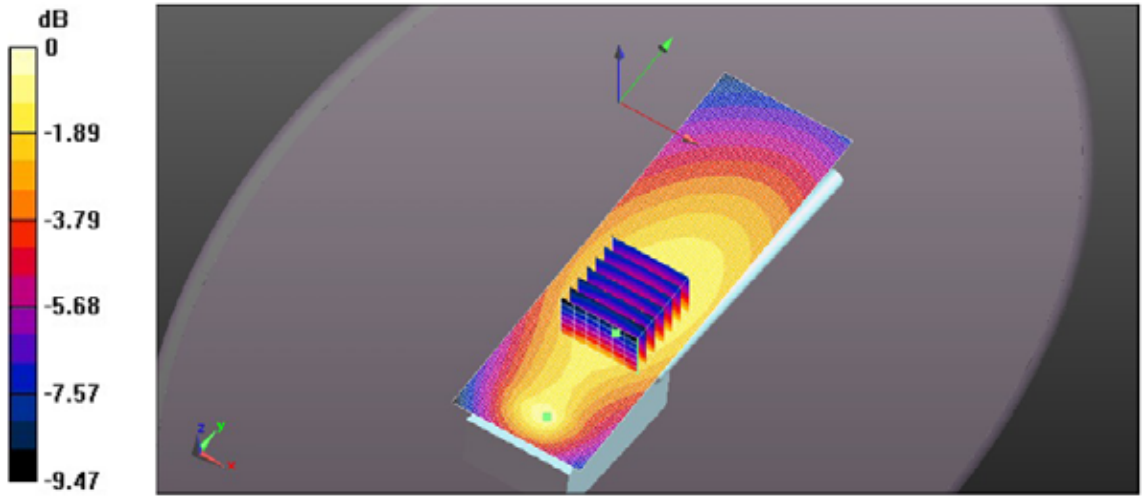

0 dB = 0.751 W/kg = -1.24 dBW/kg

File Name: ICOM-590Q Body IC-M85UL FA-SC58V 156.05MHz.da52:0

DUT: ICOM IC-M85UL; Type: VHF Marine Transceiver; Serial: 00000305

Communication System: UID 0, CW (0); Frequency: 156.05 MHz; Duty Cycle: 1:1
Medium parameters used: f = 156.05 MHz; σ = 0.839 S/m; ε_r = 59.12; ρ = 1000 kg/m^3 ; Phantom section: Flat Section ; Measurement Standard: DASY5 (IEEE/IEC/ANSI C63.19-2011)

DASY Configuration:

- Probe: ES3DV3 - SN3208; ConvF(7.36, 7.36, 7.36); Calibrated: 3/18/2022;
- Sensor-Surface: 3mm (Mechanical Surface Detection)
- Electronics: DAE4 Sn874; Calibrated: 8/25/2022
- Phantom: ELI 4.0; Type: QD OVA 001 BB; Serial: 1057
- DASY52 52.10.0(1446); SEMCAD X 14.6.10(7417)

Configuration_Body_IC-M85UL/Body Back, P=5W,d=0mm, (SAR corrected for target medium)/Area Scan (51x161x1): Interpolated grid: dx=1.500 mm, dy=1.500 mm
Maximum value of SAR (interpolated) = 0.927 W/kg

Configuration_Body_IC-M85UL/Body Back, P=5W,d=0mm,(SAR corrected for target medium)/Zoom Scan (7x7x7) (7x7x7)/Cube 0: Measurement grid: dx=7.5mm, dy=7.5mm, dz=5mm
Reference Value = 31.67 V/m; Power Drift = -0.05 dB
Peak SAR (extrapolated) = 1.50 W/kg
SAR(1 g) = 0.811 W/kg; SAR(10 g) = 0.549 W/kg (SAR corrected for target medium)
Maximum value of SAR (measured) = 0.937 W/kg

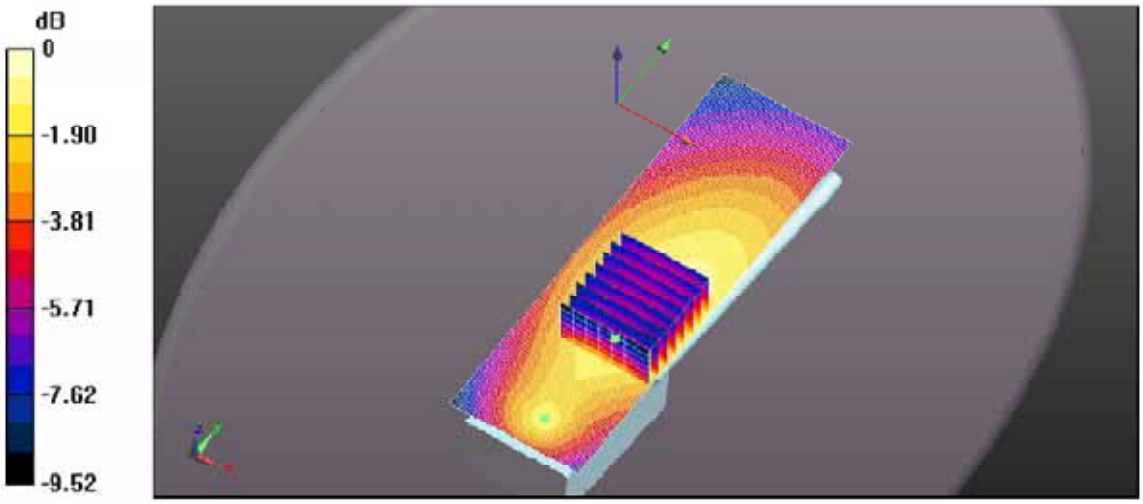

0 dB = 0.937 W/kg = -0.28 dBW/kg

File Name: ICOM-590Q Body IC-M85UL FA-SC58V 156.40MHz.da52:0

DUT: ICOM IC-M85UL; Type: VHF Marine Transceiver; Serial: 00000305

Communication System: UID 0, CW (0); Frequency: 156.4 MHz; Duty Cycle: 1:1
Medium parameters used: f = 156.4 MHz; σ = 0.839 S/m; ε_r = 59.108; ρ = 1000 kg/m^3 ; Phantom section: Flat Section ; Measurement Standard: DASY5 (IEEE/IEC/ANSI C63.19-2011)

DASY Configuration:

- Probe: ES3DV3 - SN3208; ConvF(7.36, 7.36, 7.36); Calibrated: 3/18/2022;
- Sensor-Surface: 3mm (Mechanical Surface Detection)
- Electronics: DAE4 Sn874; Calibrated: 8/25/2022
- Phantom: ELI 4.0; Type: QD OVA 001 BB; Serial: 1057
- DASY52 52.10.0(1446); SEMCAD X 14.6.10(7417)

Configuration_Body_IC-M85UL/Body Back, P=5W,d=0mm, (SAR corrected for target medium)/Area Scan (51x161x1): Interpolated grid: dx=1.500 mm, dy=1.500 mm
Maximum value of SAR (interpolated) = 0.989 W/kg

Configuration_Body_IC-M85UL/Body Back, P=5W,d=0mm,(SAR corrected for target medium)/Zoom Scan (7x7x7) (8x8x7)/Cube 0: Measurement grid: dx=7.5mm, dy=7.5mm, dz=5mm
Reference Value = 33.38 V/m; Power Drift = -0.06 dB
Peak SAR (extrapolated) = 1.61 W/kg
SAR(1 g) = 0.877 W/kg; SAR(10 g) = 0.599 W/kg (SAR corrected for target medium)
Maximum value of SAR (measured) = 1.00 W/kg

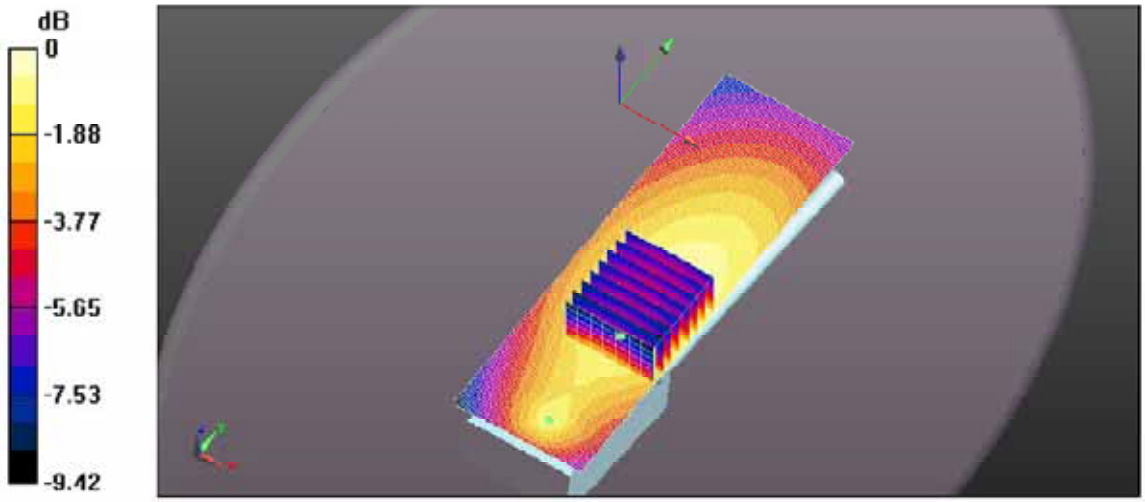

0 dB = 1.00 W/kg = 0.00 dBW/kg

File Name: ICOM-590Q Body IC-M85UL FA-SC58V 157.025MHz.da52:0

DUT: ICOM IC-M85UL; Type: VHF Marine Transceiver; Serial: 00000305

Communication System: UID 0, CW (0); Frequency: 157.025 MHz; Duty Cycle: 1:1
Medium parameters used: f = 158 MHz; σ = 0.838 S/m; ε_r = 59.05; ρ = 1000 kg/m^3 ; Phantom section: Flat Section ; Measurement Standard: DASY5 (IEEE/IEC/ANSI C63.19-2011)

DASY Configuration:

- Probe: ES3DV3 - SN3208; ConvF(7.36, 7.36, 7.36); Calibrated: 3/18/2022;
- Sensor-Surface: 3mm (Mechanical Surface Detection)
- Electronics: DAE4 Sn874; Calibrated: 8/25/2022
- Phantom: ELI 4.0; Type: QD OVA 001 BB; Serial: 1057
- DASY52 52.10.0(1446); SEMCAD X 14.6.10(7417)

Configuration_Body_IC-M85UL/Body Back, P=5W,d=0mm, (SAR corrected for target medium)/Area Scan (51x161x1): Interpolated grid: dx=1.500 mm, dy=1.500 mm
Maximum value of SAR (interpolated) = 1.12 W/kg

Configuration_Body_IC-M85UL/Body Back, P=5W,d=0mm,(SAR corrected for target medium)/Zoom Scan (7x7x7) (8x8x7)/Cube 0: Measurement grid: dx=7.5mm, dy=7.5mm, dz=5mm
Reference Value = 33.82 V/m; Power Drift = -0.07 dB
Peak SAR (extrapolated) = 1.75 W/kg
SAR(1 g) = 0.960 W/kg; SAR(10 g) = 0.658 W/kg (SAR corrected for target medium)
Maximum value of SAR (measured) = 1.11 W/kg

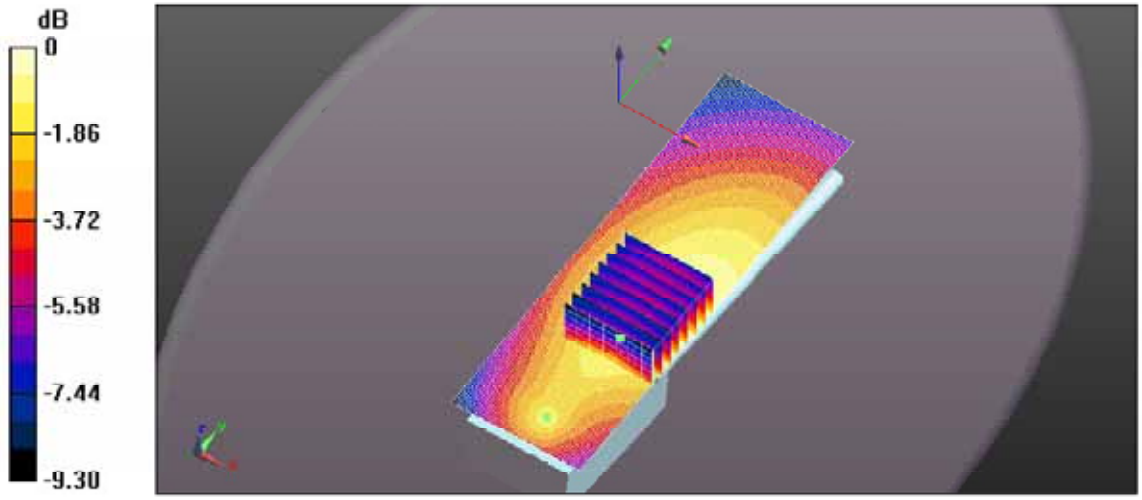

0 dB = 1.11 W/kg = 0.44 dBW/kg

File Name: ICOM-590Q Body IC-M85UL FA-SC58V 157.425MHz.da52:0

DUT: ICOM IC-M85UL; Type: VHF Marine Transceiver; Serial: 00000305

Communication System: UID 0, CW (0); Frequency: 157.425 MHz; Duty Cycle: 1:1
Medium parameters used: f = 158 MHz; σ = 0.838 S/m; ε_r = 59.05; ρ = 1000 kg/m^3 ; Phantom section: Flat Section ; Measurement Standard: DASY5 (IEEE/IEC/ANSI C63.19-2011)

DASY Configuration:

- Probe: ES3DV3 - SN3208; ConvF(7.36, 7.36, 7.36); Calibrated: 3/18/2022;
- Sensor-Surface: 3mm (Mechanical Surface Detection)
- Electronics: DAE4 Sn874; Calibrated: 8/25/2022
- Phantom: ELI 4.0; Type: QD OVA 001 BB; Serial: 1057
- DASY52 52.10.0(1446); SEMCAD X 14.6.10(7417)

Configuration_Body_IC-M85UL/Body Back, P=5W,d=0mm, (SAR corrected for target medium)/Area Scan (51x161x1): Interpolated grid: dx=1.500 mm, dy=1.500 mm
Maximum value of SAR (interpolated) = 0.967 W/kg

Configuration_Body_IC-M85UL/Body Back, P=5W,d=0mm,(SAR corrected for target medium)/Zoom Scan (7x7x7) (8x8x7)/Cube 0: Measurement grid: dx=7.5mm, dy=7.5mm, dz=5mm
Reference Value = 33.48 V/m; Power Drift = -0.06 dB
Peak SAR (extrapolated) = 1.62 W/kg
SAR(1 g) = 0.871 W/kg; SAR(10 g) = 0.586 W/kg (SAR corrected for target medium)
Maximum value of SAR (measured) = 1.00 W/kg

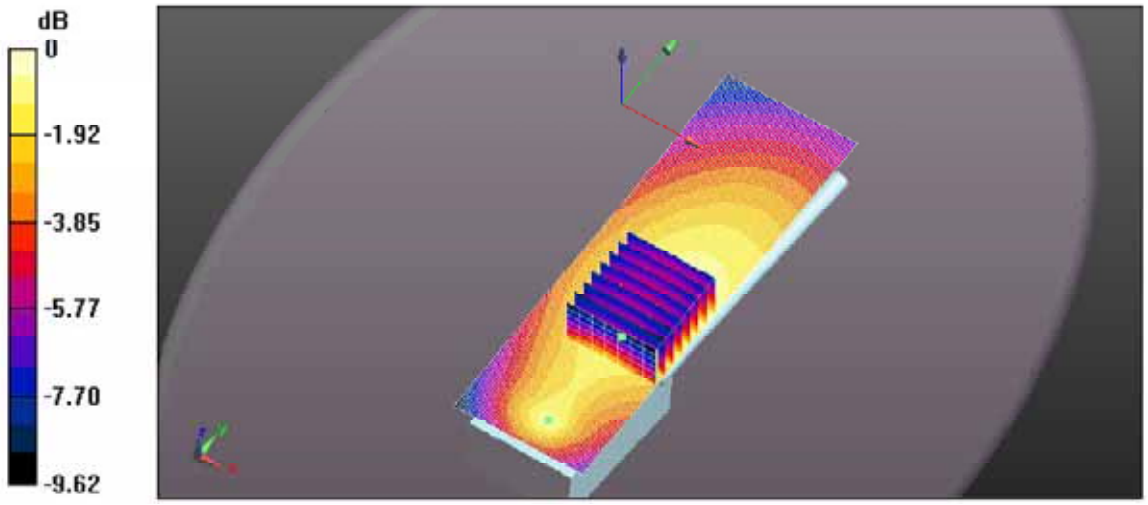

0 dB = 1.00 W/kg = 0.00 dBW/kg

File Name: ICOM-590Q Body IC-M85UL FA-SC58V 173.95MHz.da52:0

DUT: ICOM IC-M85UL; Type: VHF Marine Transceiver; Serial: 00000305

Communication System: UID 0, CW (0); Frequency: 173.95 MHz; Duty Cycle: 1:1
Medium parameters used: f = 174 MHz; σ = 0.85 S/m; ε_r = 58.44; ρ = 1000 kg/m^3 ; Phantom section: Flat Section ; Measurement Standard: DASY5 (IEEE/IEC/ANSI C63.19-2011)

DASY Configuration:

- Probe: ES3DV3 - SN3208; ConvF(7.36, 7.36, 7.36); Calibrated: 3/18/2022;
- Sensor-Surface: 3mm (Mechanical Surface Detection)
- Electronics: DAE4 Sn874; Calibrated: 8/25/2022
- Phantom: ELI 4.0; Type: QD OVA 001 BB; Serial: 1057
- DASY52 52.10.0(1446); SEMCAD X 14.6.10(7417)

Configuration_Body_IC-M85UL/Body Back, P=5W,d=0mm, (SAR corrected for target medium)/Area Scan (51x161x1): Interpolated grid: dx=1.500 mm, dy=1.500 mm
Maximum value of SAR (interpolated) = 0.592 W/kg

Configuration_Body_IC-M85UL/Body Back, P=5W,d=0mm,(SAR corrected for target medium)/Zoom Scan (7x7x7) (8x8x7)/Cube 0: Measurement grid: dx=7.5mm, dy=7.5mm, dz=5mm
Reference Value = 25.57 V/m; Power Drift = -0.07 dB
Peak SAR (extrapolated) = 0.774 W/kg
SAR(1 g) = 0.527 W/kg; SAR(10 g) = 0.394 W/kg (SAR corrected for target medium)
Maximum value of SAR (measured) = 0.589 W/kg

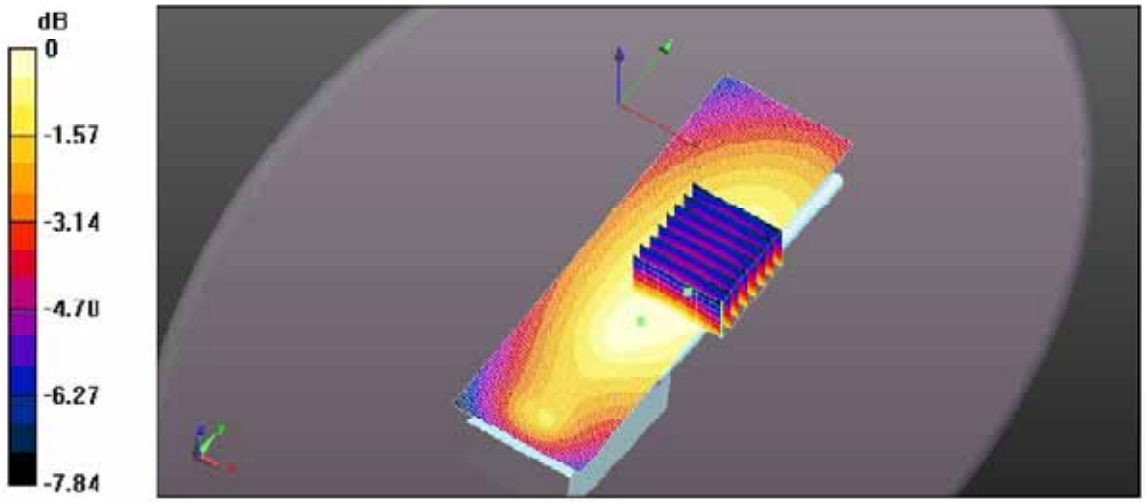

0 dB = 0.589 W/kg = -2.30 dBW/kg

EXHIBIT 3. PRESCAN FOR MB-136 BELT CLIP(BP-292UL)

File Name: ICOM-590Q (MB-136 Prescan) Body IC-M85UL FA-SC58V 173.95MHz.da52:0

DUT: ICOM IC-M85UL; Type: VHF Marine Transceiver; Serial: 00000305

Communication System: UID 0, CW (0); Frequency: 157.025 MHz; Duty Cycle: 1:1
Medium parameters used: f = 158 MHz; σ = 0.789 S/m; ε_r = 59.889; ρ = 1000 kg/m^3 ; Phantom section: Flat Section ; Measurement Standard: DASY5 (IEEE/IEC/ANSI C63.19-2011)

DASY Configuration:

- Probe: ES3DV3 - SN3208; ConvF(7.36, 7.36, 7.36); Calibrated: 3/18/2022;
- Sensor-Surface: 3mm (Mechanical Surface Detection)
- Electronics: DAE4 Sn874; Calibrated: 8/25/2022
- Phantom: ELI 4.0; Type: QD OVA 001 BB; Serial: 1057
- DASY52 52.10.0(1446); SEMCAD X 14.6.10(7417)

Configuration_Body_IC-M85UL/Body Back, P=5W,d=0mm, (SAR corrected for target medium)/Area Scan (51x161x1): Interpolated grid: dx=1.500 mm, dy=1.500 mm
Maximum value of SAR (interpolated) = 0.337 W/kg

Configuration_Body_IC-M85UL/Body Back, P=5W,d=0mm,(SAR corrected for target medium)/Zoom Scan (7x7x7) (8x8x7)/Cube 0: Measurement grid: dx=7.5mm, dy=7.5mm, dz=5mm
Reference Value = 19.83 V/m; Power Drift = 0.01 dB
Peak SAR (extrapolated) = 0.461 W/kg
SAR(1 g) = 0.306 W/kg; SAR(10 g) = 0.229 W/kg (SAR corrected for target medium)
Maximum value of SAR (measured) = 0.343 W/kg

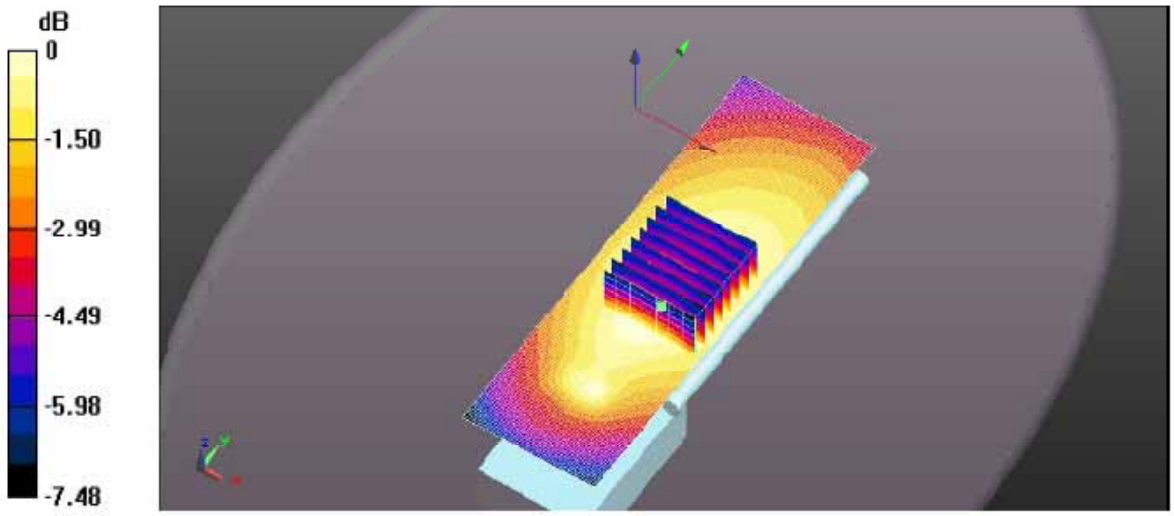

0 dB = 0.343 W/kg = -4.65 dBW/kg

3000 Bristol Circle, Oakville, Ontario, Canada L6H 6G4
Tel. #: 905-829-1570, Fax. #: 905-829-8050, Email: vic@ultratech-labs.com, Website: http://www.ultratech-labs.com