APPENDIX 1

SAR Measurement Data

Table of Contents

EXHIBIT 1. PRESCAN MEASUREMENT SUMMARY 6

FILE NAME: ICOM-489Q HEAD FA-SC25V 136MHZ BP-278.DA52:0 7
FILE NAME: ICOM-489Q HEAD FA-SC25V 136MHZ BP-279.DA52:0 8
FILE NAME: ICOM-489Q HEAD FA-SC25V 136MHZ BP-280.DA52:0 9
FILE NAME: ICOM-489Q BODY FA-SC25V 136MHZ BP-278.DA52:0 10
FILE NAME: ICOM-489Q BODY FA-SC25V 136MHZ BP-279.DA52:0 11
FILE NAME: ICOM-489Q BODY FA-SC25V 136MHZ BP-280.DA52:0 12
FILE NAME: ICOM-489Q BODY FA-SC25V 136MHZ BP-280 HM-158LA.DA52:0 13
FILE NAME: ICOM-489Q BODY FA-SC25V 136MHZ BP-280 HS-94.DA52:0 14

EXHIBIT 2. HEAD SAR MEASUREMENTS 15

FILE NAME: ICOM-489Q BODY FA-SC25V 136MHZ BP-280.DA52:0 18
FILE NAME: ICOM-489Q HEAD FA-SC25V 143MHZ.DA52:0 19
FILE NAME: ICOM-489Q HEAD FA-SC25V 150MHZ.DA52:0 20
FILE NAME: ICOM-489Q HEAD FA-SC28V 148MHZ.DA52:0 21
FILE NAME: ICOM-489Q HEAD FA-SC28V 155MHZ.DA52:0 22
FILE NAME: ICOM-489Q HEAD FA-SC28V 162MHZ.DA52:0 23
FILE NAME: ICOM-489Q HEAD FA-SC29V 160MHZ.DA52:0 24
FILE NAME: ICOM-489Q HEAD FA-SC29V 167MHZ.DA52:0 25
FILE NAME: ICOM-489Q HEAD FA-SC29V 174MHZ.DA52:0 26
FILE NAME: ICOM-489Q HEAD FA-SC55V 150MHZ.DA52:0 27
FILE NAME: ICOM-489Q HEAD FA-SC55V 156MHZ.DA52:0 28
FILE NAME: ICOM-489Q HEAD FA-SC55V 162MHZ.DA52:0 29
FILE NAME: ICOM-489Q HEAD FA-SC55V 168MHZ.DA52:0 30
FILE NAME: ICOM-489Q HEAD FA-SC55V 174MHZ.DA52:0 31
FILE NAME: ICOM-489Q HEAD FA-SC26VS 136MHZ.DA52:0 32
FILE NAME: ICOM-489Q HEAD FA-SC26VS 140MHZ.DA52:0 33
FILE NAME: ICOM-489Q HEAD FA-SC26VS 155MHZ.DA52:0 34
FILE NAME: ICOM-489Q HEAD FA-SC27VS 142MHZ.DA52:0 35
FILE NAME: ICOM-489Q HEAD FA-SC27VS 146MHZ.DA52:0 36
FILE NAME: ICOM-489Q HEAD FA-SC27VS 150MHZ.DA52:0 37
FILE NAME: ICOM-489Q HEAD FA-SC56VS 150MHZ.DA52:0 38
FILE NAME: ICOM-489Q HEAD FA-SC56VS 156MHZ.DA52:0 39
FILE NAME: ICOM-489Q HEAD FA-SC56VS 162MHZ.DA52:0 40
FILE NAME: ICOM-489Q HEAD FA-SC57VS 160MHZ.DA52:0 41
FILE NAME: ICOM-489Q HEAD FA-SC57VS 167MHZ.DA52:0 42
FILE NAME: ICOM-489Q HEAD FA-SC57VS 174MHZ.DA52:0 43
FILE NAME: ICOM-489Q HEAD FA-SC61VC 174MM 136MHZ.DA52:0 44
FILE NAME: ICOM-489Q HEAD FA-SC61VC 174MM 142.3MHZ.DA52:0 45
FILE NAME: ICOM-489Q HEAD FA-SC61VC 174MM 148.7MHZ.DA52:0 46
FILE NAME: ICOM-489Q HEAD FA-SC61VC 174MM 155MHZ.DA52:0 47
FILE NAME: ICOM-489Q HEAD FA-SC61VC 174MM 161.3MHZ.DA52:0 48
FILE NAME: ICOM-489Q HEAD FA-SC61VC 174MM 167.7MHZ.DA52:0 49
FILE NAME: ICOM-489Q HEAD FA-SC61VC 174MM 174MHZ.DA52:0 50
FILE NAME: ICOM-489Q HEAD FA-SC61VC 169MM 136MHZ.DA52:0 51
FILE NAME: ICOM-489Q HEAD FA-SC61VC 169MM 142.3MHZ.DA52:0 52
FILE NAME: ICOM-489Q HEAD FA-SC61VC 169MM 148.7MHZ.DA52:0 53
FILE NAME: ICOM-489Q HEAD FA-SC61VC 169MM 155MHZ.DA52:0 54
FILE NAME: ICOM-489Q HEAD FA-SC61VC 169MM 161.3MHZ.DA52:0 55
FILE NAME: ICOM-489Q HEAD FA-SC61VC 169MM 167.7MHZ.DA52:0 56
FILE NAME: ICOM-489Q HEAD FA-SC61VC 169MM 174MHZ.DA52:0 57
FILE NAME: ICOM-489Q HEAD FA-SC61VC 163MM 136MHZ.DA52:0 58
FILE NAME: ICOM-489Q HEAD FA-SC61VC 163MM 142.3MHZ.DA52:0 59
FILE NAME: ICOM-489Q HEAD FA-SC61VC 163MM 148.7MHZ.DA52:0 60

FILE NAME: ICOM-489Q HEAD FA-SC61VC 163MM 155MHZ.DA52:0 61
FILE NAME: ICOM-489Q HEAD FA-SC61VC 163MM 161.3MHZ.DA52:0 62
FILE NAME: ICOM-489Q HEAD FA-SC61VC 163MM 167.7MHZ.DA52:0 63
FILE NAME: ICOM-489Q HEAD FA-SC61VC 163MM 174MHZ.DA52:0 64
FILE NAME: ICOM-489Q HEAD FA-SC61VC 157MM 136MHZ.DA52:0 65
FILE NAME: ICOM-489Q HEAD FA-SC61VC 157MM 142.3MHZ.DA52:0 66
FILE NAME: ICOM-489Q HEAD FA-SC61VC 157MM 148.7MHZ.DA52:0 67
FILE NAME: ICOM-489Q HEAD FA-SC61VC 157MM 155MHZ.DA52:0 68
FILE NAME: ICOM-489Q HEAD FA-SC61VC 157MM 161.3MHZ.DA52:0 69
FILE NAME: ICOM-489Q HEAD FA-SC61VC 157MM 167.7MHZ.DA52:0 70
FILE NAME: ICOM-489Q HEAD FA-SC61VC 157MM 174MHZ.DA52:0 71
FILE NAME: ICOM-489Q HEAD FA-SC61VC 151MM 136MHZ.DA52:0 72
FILE NAME: ICOM-489Q HEAD FA-SC61VC 151MM 142.3MHZ.DA52:0 73
FILE NAME: ICOM-489Q HEAD FA-SC61VC 151MM 148.7MHZ.DA52:0 74
FILE NAME: ICOM-489Q HEAD FA-SC61VC 151MM 155MHZ.DA52:0 75
FILE NAME: ICOM-489Q HEAD FA-SC61VC 151MM 161.3MHZ.DA52:0 76
FILE NAME: ICOM-489Q HEAD FA-SC61VC 151MM 167.7MHZ.DA52:0 77
FILE NAME: ICOM-489Q HEAD FA-SC61VC 151MM 174MHZ.DA52:0 78
FILE NAME: ICOM-489Q HEAD FA-SC61VC 146MM 136MHZ.DA52:0 79
FILE NAME: ICOM-489Q HEAD FA-SC61VC 146MM 142.3MHZ.DA52:0 80
FILE NAME: ICOM-489Q HEAD FA-SC61VC 146MM 148.7MHZ.DA52:0 81
FILE NAME: ICOM-489Q HEAD FA-SC61VC 146MM 155MHZ.DA52:0 82
FILE NAME: ICOM-489Q HEAD FA-SC61VC 146MM 161.3MHZ.DA52:0 83
FILE NAME: ICOM-489Q HEAD FA-SC61VC 146MM 167.7MHZ.DA52:0 84
FILE NAME: ICOM-489Q HEAD FA-SC61VC 146MM 174MHZ.DA52:0 85
FILE NAME: ICOM-489Q HEAD FA-SC61VC 141MM 136MHZ.DA52:0 86
FILE NAME: ICOM-489Q HEAD FA-SC61VC 141MM 142.3MHZ.DA52:0 87
FILE NAME: ICOM-489Q HEAD FA-SC61VC 141MM 148.7MHZ.DA52:0 88
FILE NAME: ICOM-489Q HEAD FA-SC61VC 141MM 155MHZ.DA52:0 89
FILE NAME: ICOM-489Q HEAD FA-SC61VC 141MM 161.3MHZ.DA52:0 90
FILE NAME: ICOM-489Q HEAD FA-SC61VC 141MM 167.7MHZ.DA52:0 91
FILE NAME: ICOM-489Q HEAD FA-SC61VC 141MM 174MHZ.DA52:0 92
FILE NAME: ICOM-489Q HEAD FA-SC61VC 137MM 136MHZ.DA52:0 93
FILE NAME: ICOM-489Q HEAD FA-SC61VC 137MM 142.3MHZ.DA52:0 94
FILE NAME: ICOM-489Q HEAD FA-SC61VC 137MM 148.7MHZ.DA52:0 95
FILE NAME: ICOM-489Q HEAD FA-SC61VC 137MM 155MHZ.DA52:0 96
FILE NAME: ICOM-489Q HEAD FA-SC61VC 137MM 161.3MHZ.DA52:0 97
FILE NAME: ICOM-489Q HEAD FA-SC61VC 137MM 167.7MHZ.DA52:0 98
FILE NAME: ICOM-489Q HEAD FA-SC61VC 137MM 174MHZ.DA52:0 99
FILE NAME: ICOM-489Q HEAD FA-SC61VC 133MM 136MHZ.DA52:0 100
FILE NAME: ICOM-489Q HEAD FA-SC61VC 133MM 142.3MHZ.DA52:0 101
FILE NAME: ICOM-489Q HEAD FA-SC61VC 133MM 148.7MHZ.DA52:0 102
FILE NAME: ICOM-489Q HEAD FA-SC61VC 133MM 155MHZ.DA52:0 103
FILE NAME: ICOM-489Q HEAD FA-SC61VC 133MM 161.3MHZ.DA52:0 104
FILE NAME: ICOM-489Q HEAD FA-SC61VC 133MM 167.7MHZ.DA52:0 105
FILE NAME: ICOM-489Q HEAD FA-SC61VC 133MM 174MHZ.DA52:0 106

EXHIBIT 3. BODY SAR MEASUREMENTS 107

FILE NAME: ICOM-489Q BODY FA-SC25V 136MHZ BP-278.DA52:0 110
FILE NAME: ICOM-489Q BODY FA-SC25V 136MHZ BP-279.DA52:0 111
FILE NAME: ICOM-489Q BODY FA-SC25V 136MHZ BP-280.DA52:0 112
FILE NAME: ICOM-489Q BODY FA-SC25V 136MHZ BP-280 HM-158LA.DA52:0 113
FILE NAME: ICOM-489Q BODY FA-SC25V 136MHZ BP-280 HS-94.DA52:0 114
FILE NAME: ICOM-489Q BODY FA-SC25V 143MHZ.DA52:0 115
FILE NAME: ICOM-489Q BODY FA-SC25V 150MHZ.DA52:0 116
FILE NAME: ICOM-489Q BODY FA-SC28V 148MHZ.DA52:0 117
FILE NAME: ICOM-489Q BODY FA-SC28V 155MHZ.DA52:0 118
FILE NAME: ICOM-489Q BODY FA-SC28V 162MHZ.DA52:0 119

FILE NAME: ICOM-489Q BODY FA-SC29V 160MHZ.DA52:0 120
FILE NAME: ICOM-489Q BODY FA-SC29V 167MHZ.DA52:0 121
FILE NAME: ICOM-489Q BODY FA-SC29V 174MHZ.DA52:0 122
FILE NAME: ICOM-489Q BODY FA-SC55V 156MHZ.DA52:0 123
FILE NAME: ICOM-489Q BODY FA-SC55V 162MHZ.DA52:0 124
FILE NAME: ICOM-489Q BODY FA-SC55V 168MHZ.DA52:0 125
FILE NAME: ICOM-489Q BODY FA-SC55V 174MHZ.DA52:0 126
FILE NAME: ICOM-489Q BODY FA-SC26VS 136MHZ.DA52:0 127
FILE NAME: ICOM-489Q BODY FA-SC27VS 146MHZ.DA52:0 130
FILE NAME: ICOM-489Q BODY FA-SC27VS 150MHZ.DA52:0 131
FILE NAME: ICOM-489Q BODY FA-SC56VS 150MHZ.DA52:0 132
FILE NAME: ICOM-489Q BODY FA-SC56VS 156MHZ.DA52:0 133
FILE NAME: ICOM-489Q BODY FA-SC56VS 162MHZ.DA52:0 134
FILE NAME: ICOM-489Q BODY FA-SC57VS 160MHZ.DA52:0 135
FILE NAME: ICOM-489Q BODY FA-SC57VS 167MHZ.DA52:0 136
FILE NAME: ICOM-489Q BODY FA-SC57VS 174MHZ.DA52:0 137
FILE NAME: ICOM-489Q BODY FA-SC61VC 174MM 136MHZ.DA52:0 138
FILE NAME: ICOM-489Q BODY FA-SC61VC 174MM 142.3MHZ.DA52:0 139
FILE NAME: ICOM-489Q BODY FA-SC61VC 174MM 148.7MHZ.DA52:0 140
FILE NAME: ICOM-489Q BODY FA-SC61VC 174MM 155MHZ.DA52:0 141
FILE NAME: ICOM-489Q BODY FA-SC61VC 174MM 161.3MHZ.DA52:0 142
FILE NAME: ICOM-489Q BODY FA-SC61VC 174MM 167.7MHZ.DA52:0 143
FILE NAME: ICOM-489Q BODY FA-SC61VC 174MM 174MHZ.DA52:0 144
FILE NAME: ICOM-489Q BODY FA-SC61VC 169MM 136MHZ.DA52:0 145
FILE NAME: ICOM-489Q BODY FA-SC61VC 169MM 142.3MHZ.DA52:0 146
FILE NAME: ICOM-489Q BODY FA-SC61VC 169MM 148.7MHZ.DA52:0 147
FILE NAME: ICOM-489Q BODY FA-SC61VC 169MM 155MHZ.DA52:0 148
FILE NAME: ICOM-489Q BODY FA-SC61VC 169MM 161.3MHZ.DA52:0 149
FILE NAME: ICOM-489Q BODY FA-SC61VC 169MM 167.7MHZ.DA52:0 150
FILE NAME: ICOM-489Q BODY FA-SC61VC 169MM 174MHZ.DA52:0 151
FILE NAME: ICOM-489Q BODY FA-SC61VC 163MM 136MHZ.DA52:0 152
FILE NAME: ICOM-489Q BODY FA-SC61VC 163MM 142.3MHZ.DA52:0 153
FILE NAME: ICOM-489Q BODY FA-SC61VC 163MM 148.7MHZ.DA52:0 154
FILE NAME: ICOM-489Q BODY FA-SC61VC 163MM 155MHZ.DA52:0 155
FILE NAME: ICOM-489Q BODY FA-SC61VC 163MM 161.3MHZ.DA52:0 156
FILE NAME: ICOM-489Q BODY FA-SC61VC 163MM 167.7MHZ.DA52:0 157
FILE NAME: ICOM-489Q BODY FA-SC61VC 163MM 174MHZ.DA52:0 158
FILE NAME: ICOM-489Q BODY FA-SC61VC 157MM 136MHZ.DA52:0 159
FILE NAME: ICOM-489Q BODY FA-SC61VC 157MM 142.3MHZ.DA52:0 160
FILE NAME: ICOM-489Q BODY FA-SC61VC 157MM 148.7MHZ.DA52:0 161
FILE NAME: ICOM-489Q BODY FA-SC61VC 157MM 155MHZ.DA52:0 162
FILE NAME: ICOM-489Q BODY FA-SC61VC 157MM 161.3MHZ.DA52:0 163
FILE NAME: ICOM-489Q BODY FA-SC61VC 157MM 167.7MHZ.DA52:0 164
FILE NAME: ICOM-489Q BODY FA-SC61VC 157MM 174MHZ.DA52:0 165
FILE NAME: ICOM-489Q BODY FA-SC61VC 151MM 136MHZ.DA52:0 166
FILE NAME: ICOM-489Q BODY FA-SC61VC 151MM 142.3MHZ.DA52:0 167
FILE NAME: ICOM-489Q BODY FA-SC61VC 151MM 148.7MHZ.DA52:0 168
FILE NAME: ICOM-489Q BODY FA-SC61VC 151MM 155MHZ.DA52:0 169
FILE NAME: ICOM-489Q BODY FA-SC61VC 151MM 161.3MHZ.DA52:0 170
FILE NAME: ICOM-489Q BODY FA-SC61VC 151MM 167.7MHZ.DA52:0 171
FILE NAME: ICOM-489Q BODY FA-SC61VC 151MM 174MHZ.DA52:0 172
FILE NAME: ICOM-489Q BODY FA-SC61VC 146MM 136MHZ.DA52:0 173
FILE NAME: ICOM-489Q BODY FA-SC61VC 146MM 142.3MHZ.DA52:0 174
FILE NAME: ICOM-489Q BODY FA-SC61VC 146MM 148.7MHZ.DA52:0 175
FILE NAME: ICOM-489Q BODY FA-SC61VC 146MM 155MHZ.DA52:0 176
FILE NAME: ICOM-489Q BODY FA-SC61VC 146MM 161.3MHZ.DA52:0 177
FILE NAME: ICOM-489Q BODY FA-SC61VC 146MM 167.7MHZ.DA52:0 178
FILE NAME: ICOM-489Q BODY FA-SC61VC 146MM 174MHZ.DA52:0 179

FILE NAME: ICOM-489Q BODY FA-SC61VC 141MM 136MHZ.DA52:0 180
FILE NAME: ICOM-489Q BODY FA-SC61VC 141MM 142.3MHZ.DA52:0 181
FILE NAME: ICOM-489Q BODY FA-SC61VC 141MM 148.7MHZ.DA52:0 182
FILE NAME: ICOM-489Q BODY FA-SC61VC 141MM 155MHZ.DA52:0 183
FILE NAME: ICOM-489Q BODY FA-SC61VC 141MM 161.3MHZ.DA52:0 184
FILE NAME: ICOM-489Q BODY FA-SC61VC 141MM 167.7MHZ.DA52:0 185
FILE NAME: ICOM-489Q BODY FA-SC61VC 141MM 174MHZ.DA52:0 186
FILE NAME: ICOM-489Q BODY FA-SC61VC 137MM 136MHZ.DA52:0 187
FILE NAME: ICOM-489Q BODY FA-SC61VC 137MM 142.3MHZ.DA52:0 188
FILE NAME: ICOM-489Q BODY FA-SC61VC 137MM 148.7MHZ.DA52:0 189
FILE NAME: ICOM-489Q BODY FA-SC61VC 137MM 155MHZ.DA52:0 190
FILE NAME: ICOM-489Q BODY FA-SC61VC 137MM 161.3MHZ.DA52:0 191
FILE NAME: ICOM-489Q BODY FA-SC61VC 137MM 167.7MHZ.DA52:0 192
FILE NAME: ICOM-489Q BODY FA-SC61VC 137MM 174MHZ.DA52:0 193
FILE NAME: ICOM-489Q BODY FA-SC61VC 133MM 136MHZ.DA52:0 194
FILE NAME: ICOM-489Q BODY FA-SC61VC 133MM 142.3MHZ.DA52:0 195
FILE NAME: ICOM-489Q BODY FA-SC61VC 133MM 148.7MHZ.DA52:0 196
FILE NAME: ICOM-489Q BODY FA-SC61VC 133MM 155MHZ.DA52:0 197
FILE NAME: ICOM-489Q BODY FA-SC61VC 133MM 161.3MHZ.DA52:0 198
FILE NAME: ICOM-489Q BODY FA-SC61VC 133MM 167.7MHZ.DA52:0 199
FILE NAME: ICOM-489Q BODY FA-SC61VC 133MM 174MHZ.DA52:0 200

EXHIBIT 1. PRESCAN MEASUREMENT SUMMARY

Head Prescan

Battery	Antenna	Power (W)	CH	CH. Freq (MHz)	HEAD SAR1g (W/Kg)	HEAD SAR10g (W/Kg)
BP-278	FA-SC25V	4.88	1	136	0.56	0.427
BP-279		4.88	1	136	0.65	0.495
BP-280		4.88	1	136	0.684	0.52

Body Prescan w/ MB-133

Battery	Antenna	Power (W)	CH	CH. Freq (MHz)	BODY SAR1g (W/Kg)	BODY SAR10g (W/Kg)
BP-278	FA-SC25V	4.88	9	136	1.49	1.07
BP-279		4.88	9	136	1.62	1.17
BP-280		4.88	9	136	1.74	1.28

w/ MB-133

Microphone	Antenna	Power (W)	CH	CH. Freq (MHz)	BODY SAR1g (W/Kg) BP-280 2400mAh	BODY SAR10g (W/Kg) BP-280 2400mAh
HM-158LA	FA-SC25V	4.88	9	136	0.339	0.248
HS-94		4.88	9	136	0.901	0.668

Test Laboratory: Ultratech Group of Labs

FILE NAME: ICOM-489Q HEAD FA-SC25V 136MHZ BP-278.DA52:0

DUT: IC-F1100DT; Type: VHF Receiver; Serial: 32000201-0

Communication System: UID 10000, CW; Frequency: 136 MHz; Duty Cycle: 1:1
Medium parameters used: f = 136 MHz; σ = 0.773 S/m; ε_r = 54.298; ρ = 1000 kg/m^3 ; Phantom section: Flat Section ; Measurement Standard: DASY5 (IEEE/IEC/ANSI C63.19-2011)

DASY Configuration:

- Probe: ES3DV3 - SN3250; ConvF(7.64, 7.64, 7.64); Calibrated: 3/13/2018;
- Sensor-Surface: 3mm (Mechanical Surface Detection)
- Electronics: DAE4 Sn874; Calibrated: 8/21/2017
- Phantom: ELI 4.0; Type: QD OVA 001 BB; Serial: 1057
- DASY52 52.10.0(1446); SEMCAD X 14.6.10(7417)

Configuration Head for IC-F1100DT/Head Front, P=5W, d=25mm/Zoom Scan (7x7x7) (7x7x7)/Cube 0: Measurement grid: dx=5mm, dy=5mm, dz=5mm
Reference Value = 24.82 V/m; Power Drift = -0.21 dB
Peak SAR (extrapolated) = 0.811 W/kg
SAR(1 g) = 0.560 W/kg; SAR(10 g) = 0.427 W/kg (SAR corrected for target medium)
Maximum value of SAR (measured) = 0.623 W/kg

Configuration Head for IC-F1100DT/Head Front, P=5W, d=25mm/Area Scan (71x91x1):
Interpolated grid: dx=1.500 mm, dy=1.500 mm
Maximum value of SAR (interpolated) = 0.615 W/kg

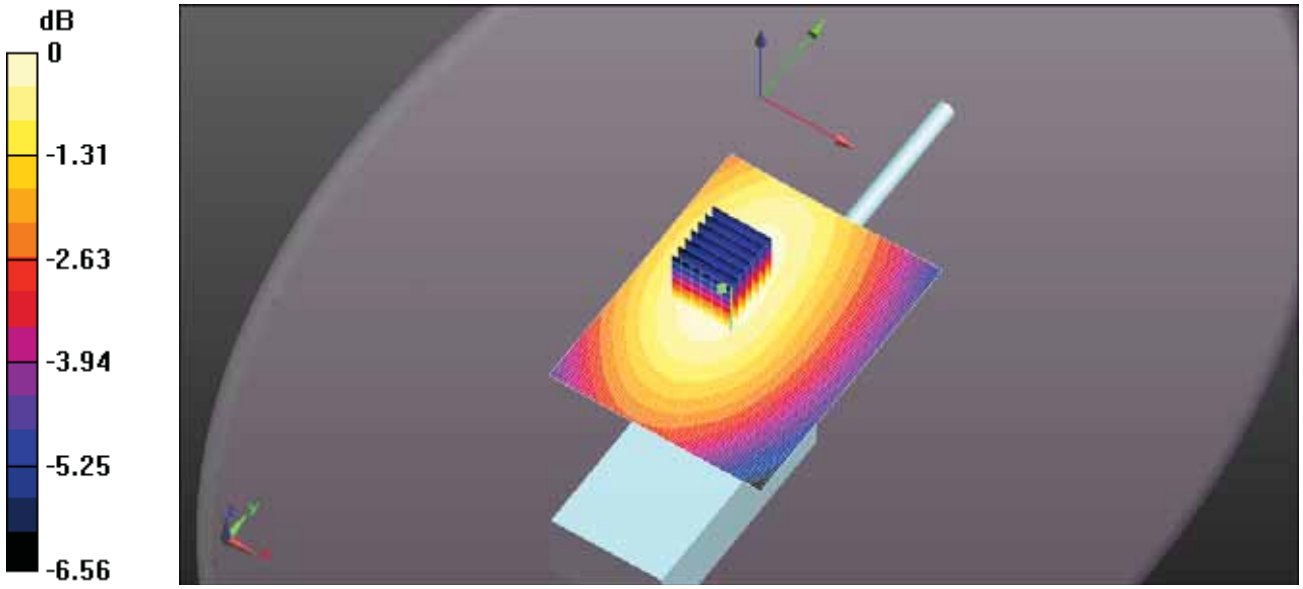

0 dB = 0.623 W/kg = -2.05 dBW/kg

Test Laboratory: Ultratech Group of Labs

FILE NAME: ICOM-489Q HEAD FA-SC25V 136MHZ BP-279.DA52:0

DUT: IC-F1100DT; Type: VHF Receiver; Serial: 32000201-0

Communication System: UID 10000, CW; Frequency: 136 MHz; Duty Cycle: 1:1
Medium parameters used: f = 136 MHz; σ = 0.773 S/m; ε_r = 54.298; ρ = 1000 kg/m^3 ; Phantom section: Flat Section ; Measurement Standard: DASY5 (IEEE/IEC/ANSI C63.19-2011)

DASY Configuration:

- Probe: ES3DV3 - SN3250; ConvF(7.64, 7.64, 7.64); Calibrated: 3/13/2018;
- Sensor-Surface: 3mm (Mechanical Surface Detection)
- Electronics: DAE4 Sn874; Calibrated: 8/21/2017
- Phantom: ELI 4.0; Type: QD OVA 001 BB; Serial: 1057
- DASY52 52.10.0(1446); SEMCAD X 14.6.10(7417)

Configuration Head for IC-F1100DT/Head Front, P=5W, d=25mm/Zoom Scan (7x7x7) (7x7x7)/Cube 0: Measurement grid: dx=5mm, dy=5mm, dz=5mm
Reference Value = 25.56 V/m; Power Drift = 0.15 dB
Peak SAR (extrapolated) = 0.943 W/kg
SAR(1 g) = 0.650 W/kg; SAR(10 g) = 0.495 W/kg (SAR corrected for target medium)
Maximum value of SAR (measured) = 0.722 W/kg

Configuration Head for IC-F1100DT/Head Front, P=5W, d=25mm/Area Scan (61x101x1): Interpolated grid: dx=1.500 mm, dy=1.500 mm
Maximum value of SAR (interpolated) = 0.704 W/kg

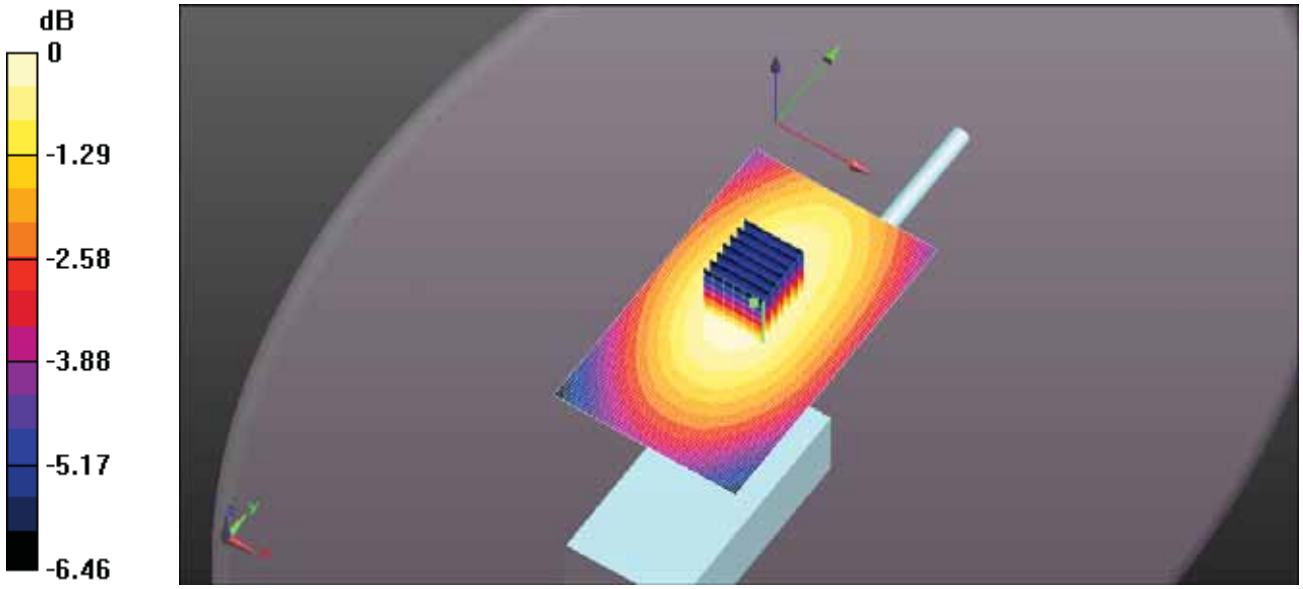

0 dB = 0.722 W/kg = -1.42 dBW/kg

Test Laboratory: Ultratech Group of Labs

FILE NAME: ICOM-489Q HEAD FA-SC25V 136MHZ BP-280.DA52:0

DUT: IC-F1100DT; Type: VHF Receiver; Serial: 32000201-0

Communication System: UID 10000, CW; Frequency: 136 MHz; Duty Cycle: 1:1
Medium parameters used: f = 136 MHz; σ = 0.773 S/m; ε_r = 54.298; ρ = 1000 kg/m^3 ; Phantom section: Flat Section ; Measurement Standard: DASY5 (IEEE/IEC/ANSI C63.19-2011)

DASY Configuration:

- Probe: ES3DV3 - SN3250; ConvF(7.64, 7.64, 7.64); Calibrated: 3/13/2018;
- Sensor-Surface: 3mm (Mechanical Surface Detection)
- Electronics: DAE4 Sn874; Calibrated: 8/21/2017
- Phantom: ELI 4.0; Type: QD OVA 001 BB; Serial: 1057
- DASY52 52.10.0(1446); SEMCAD X 14.6.10(7417)

Configuration Head for IC-F1100DT/Head Front, P=5W, d=25mm/Zoom Scan (7x7x7) (7x7x7)/Cube 0: Measurement grid: dx=5mm, dy=5mm, dz=5mm
Reference Value = 25.88 V/m; Power Drift = 0.39 dB
Peak SAR (extrapolated) = 0.994 W/kg
SAR(1 g) = 0.684 W/kg; SAR(10 g) = 0.520 W/kg (SAR corrected for target medium)
Maximum value of SAR (measured) = 0.762 W/kg

Configuration Head for IC-F1100DT/Head Front, P=5W, d=25mm/Area Scan (61x101x1): Interpolated grid: dx=1.500 mm, dy=1.500 mm
Maximum value of SAR (interpolated) = 0.731 W/kg

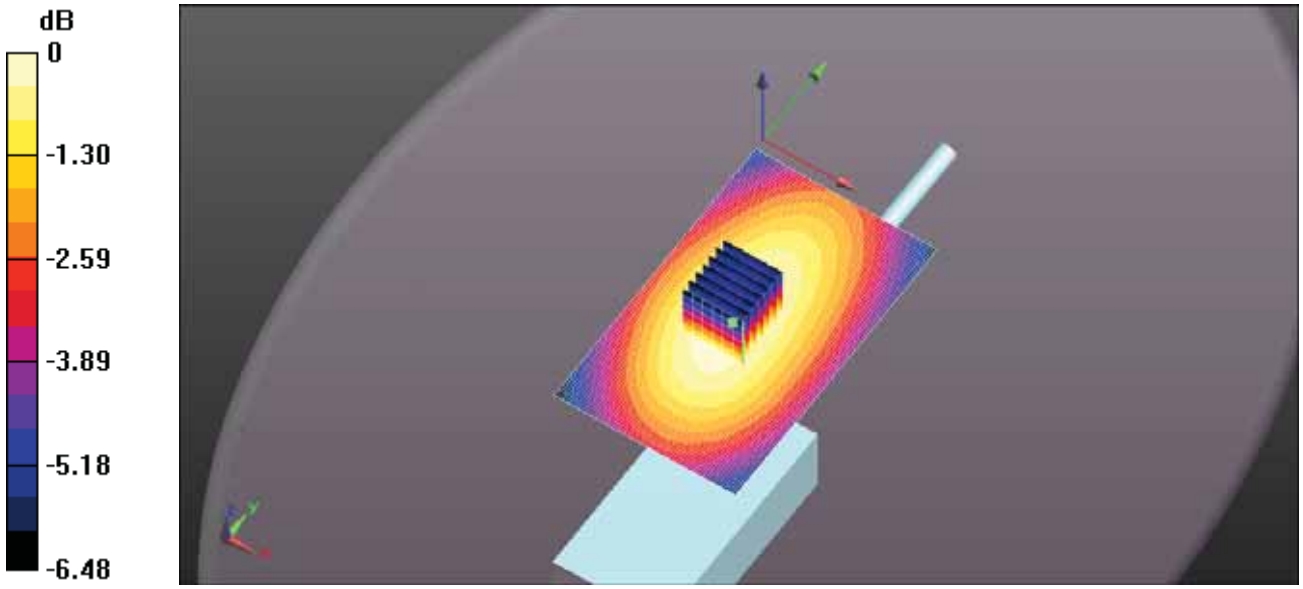

0 dB = 0.762 W/kg = -1.18 dBW/kg

Test Laboratory: Ultratech Group of Labs

FILE NAME: ICOM-489Q BODY FA-SC25V 136MHZ BP-278.DA52:0

DUT: IC-F1100DT; Type: VHF Receiver; Serial: 32000201-0

Communication System: UID 10000, CW; Frequency: 136 MHz; Duty Cycle: 1:1
Medium parameters used: f = 136 MHz; σ = 0.835 S/m; ε_r = 63.621; ρ = 1000 kg/m^3 ; Phantom section: Flat Section ; Measurement Standard: DASY5 (IEEE/IEC/ANSI C63.19-2011)

DASY Configuration:

- Probe: ES3DV3 - SN3250; ConvF(7.29, 7.29, 7.29); Calibrated: 3/13/2018;
- Sensor-Surface: 3mm (Mechanical Surface Detection)
- Electronics: DAE4 Sn874; Calibrated: 8/21/2017
- Phantom: ELI 4.0; Type: QD OVA 001 BB; Serial: 1057
- DASY52 52.10.0(1446); SEMCAD X 14.6.10(7417)

Configuration Body for IC-F1100DT/Body Back, P=5W, d=0mm/Zoom Scan (7x7x7) (7x8x7)/Cube 0: Measurement grid: dx=5mm, dy=5mm, dz=5mm
Reference Value = 47.26 V/m; Power Drift = -0.75 dB
Peak SAR (extrapolated) = 2.42 W/kg
SAR(1 g) = 1.49 W/kg; SAR(10 g) = 1.07 W/kg (SAR corrected for target medium)
Maximum value of SAR (measured) = 1.69 W/kg

Configuration Body for IC-F1100DT/Body Back, P=5W, d=0mm/Area Scan (61x101x1):
Interpolated grid: dx=1.500 mm, dy=1.500 mm
Maximum value of SAR (interpolated) = 1.77 W/kg

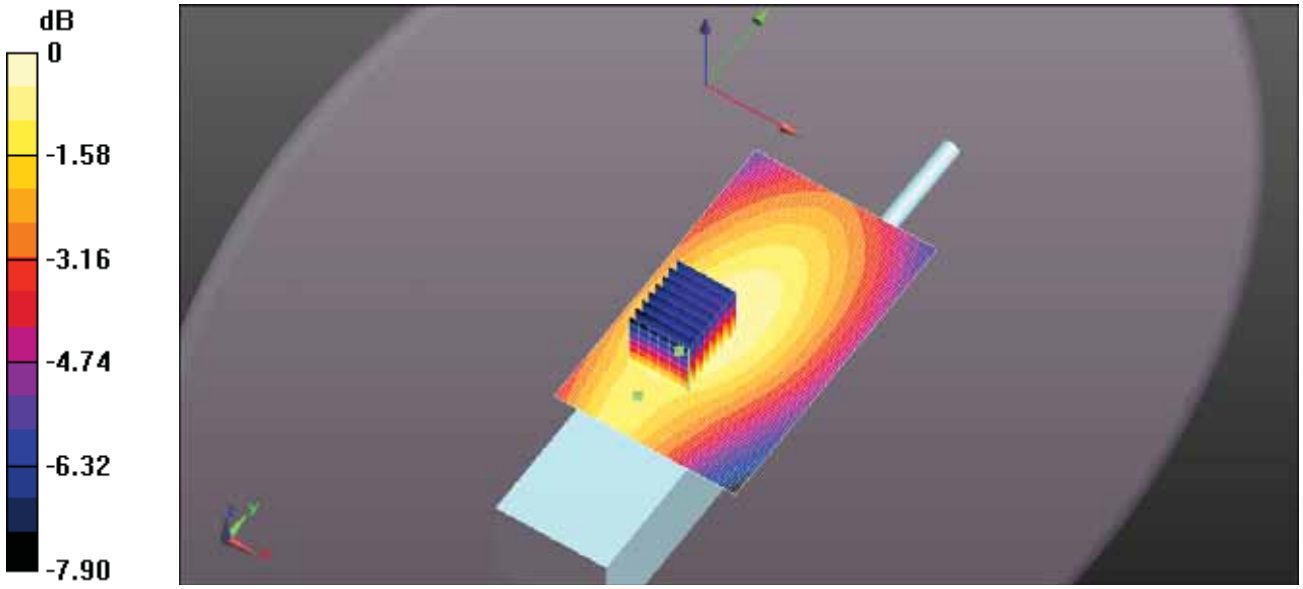

0 dB = 1.69 W/kg = 2.27 dBW/kg

Test Laboratory: Ultratech Group of Labs

FILE NAME: ICOM-489Q BODY FA-SC25V 136MHZ BP-279.DA52:0

DUT: IC-F1100DT; Type: VHF Receiver; Serial: 32000201-0

Communication System: UID 10000, CW; Frequency: 136 MHz; Duty Cycle: 1:1
Medium parameters used: f = 136 MHz; σ = 0.835 S/m; ε_r = 63.621; ρ = 1000 kg/m^3 ; Phantom section: Flat Section ; Measurement Standard: DASY5 (IEEE/IEC/ANSI C63.19-2011)

DASY Configuration:

- Probe: ES3DV3 - SN3250; ConvF(7.29, 7.29, 7.29); Calibrated: 3/13/2018;
- Sensor-Surface: 3mm (Mechanical Surface Detection)
- Electronics: DAE4 Sn874; Calibrated: 8/21/2017
- Phantom: ELI 4.0; Type: QD OVA 001 BB; Serial: 1057
- DASY52 52.10.0(1446); SEMCAD X 14.6.10(7417)

Configuration Body for IC-F1100DT/Body Back, P=5W, d=0mm/Zoom Scan (7x7x7) (7x7x7)/Cube 0: Measurement grid: dx=5mm, dy=5mm, dz=5mm
Reference Value = 47.71 V/m; Power Drift = -0.43 dB
Peak SAR (extrapolated) = 2.64 W/kg
SAR(1 g) = 1.62 W/kg; SAR(10 g) = 1.17 W/kg (SAR corrected for target medium)
Maximum value of SAR (measured) = 1.85 W/kg

Configuration Body for IC-F1100DT/Body Back, P=5W, d=0mm/Area Scan (61x111x1):
Interpolated grid: dx=1.500 mm, dy=1.500 mm
Maximum value of SAR (interpolated) = 1.87 W/kg

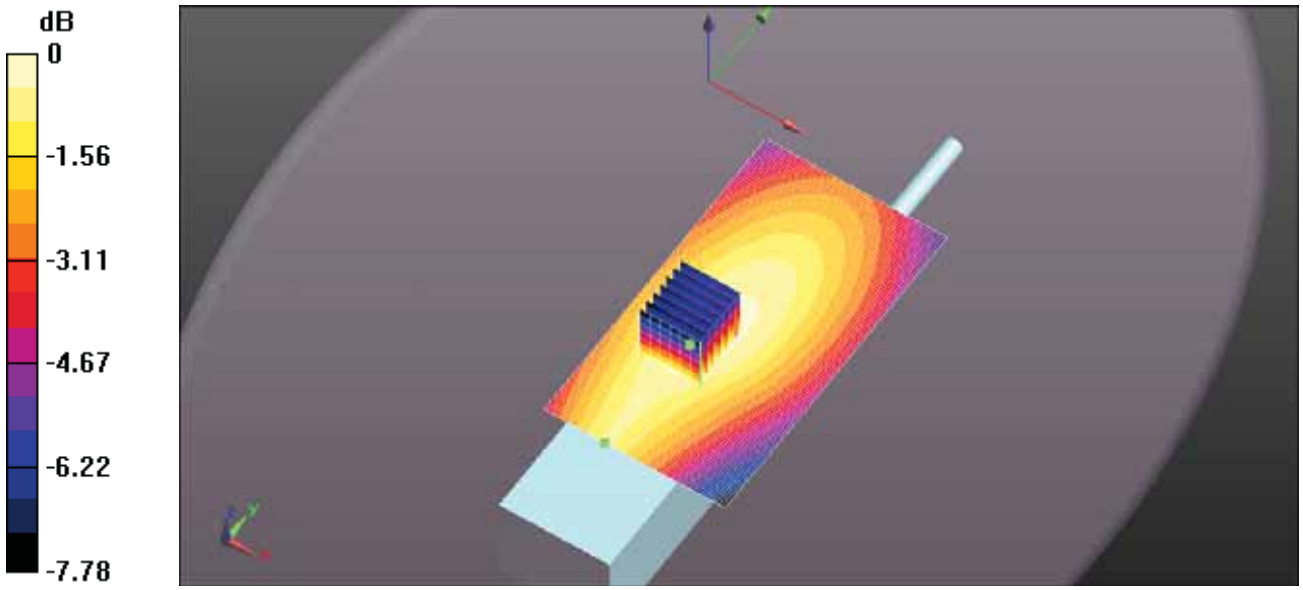

0 dB = 1.85 W/kg = 2.66 dBW/kg

Test Laboratory: Ultratech Group of Labs

FILE NAME: ICOM-489Q BODY FA-SC25V 136MHZ BP-280.DA52:0

DUT: IC-F1100DT; Type: VHF Receiver; Serial: 32000201-0

Communication System: UID 10000, CW; Frequency: 136 MHz; Duty Cycle: 1:1
Medium parameters used: f = 136 MHz; σ = 0.835 S/m; ε_r = 63.621; ρ = 1000 kg/m^3 ; Phantom section: Flat Section ; Measurement Standard: DASY5 (IEEE/IEC/ANSI C63.19-2011)

DASY Configuration:

- Probe: ES3DV3 - SN3250; ConvF(7.29, 7.29, 7.29); Calibrated: 3/13/2018;
- Sensor-Surface: 3mm (Mechanical Surface Detection)
- Electronics: DAE4 Sn874; Calibrated: 8/21/2017
- Phantom: ELI 4.0; Type: QD OVA 001 BB; Serial: 1057
- DASY52 52.10.0(1446); SEMCAD X 14.6.10(7417)

Configuration Body for IC-F1100DT/Body Back, P=5W, d=0mm/Zoom Scan (7x7x7) (8x8x7)/Cube 0: Measurement grid: dx=5mm, dy=5mm, dz=5mm
Reference Value = 51.36 V/m; Power Drift = -0.68 dB
Peak SAR (extrapolated) = 2.76 W/kg
SAR(1 g) = 1.74 W/kg; SAR(10 g) = 1.28 W/kg (SAR corrected for target medium)
Maximum value of SAR (measured) = 1.97 W/kg

Configuration Body for IC-F1100DT/Body Back, P=5W, d=0mm/Area Scan (61x111x1):
Interpolated grid: dx=1.500 mm, dy=1.500 mm
Maximum value of SAR (interpolated) = 2.02 W/kg

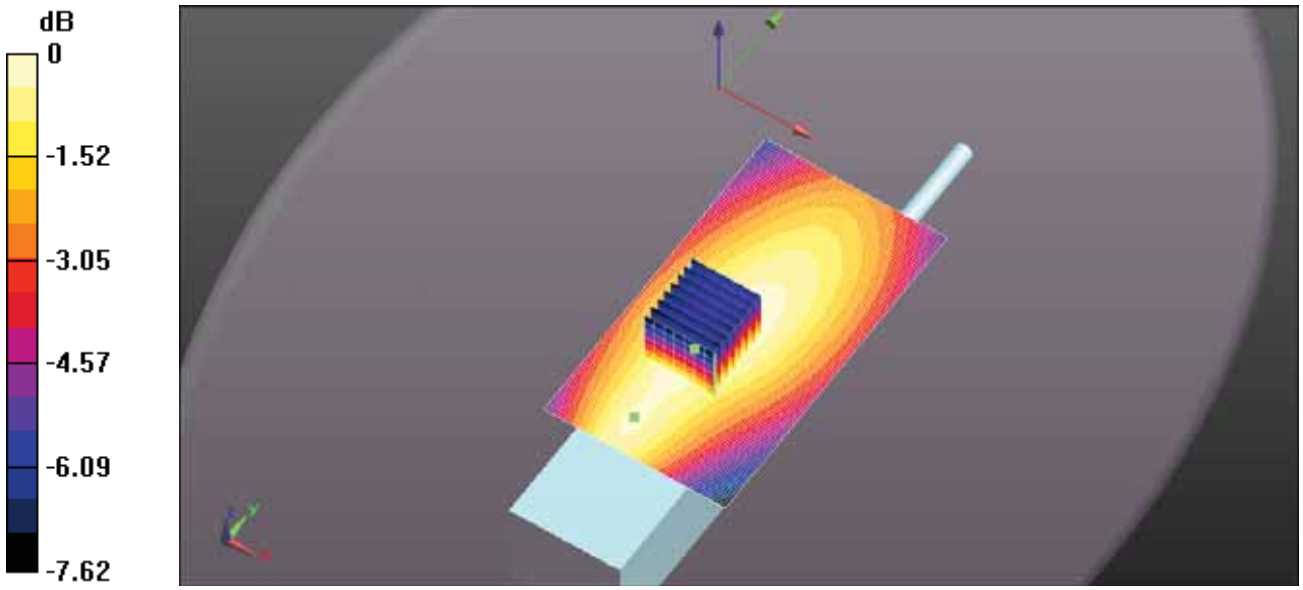

0 dB = 1.97 W/kg = 2.94 dBW/kg

Test Laboratory: Ultratech Group of Labs

FILE NAME: ICOM-489Q BODY FA-SC25V 136MHZ BP-280 HM-158LA.DA52:0

DUT: IC-F1100DT; Type: VHF Receiver; Serial: 32000201-0

Communication System: UID 10000, CW; Frequency: 136 MHz; Duty Cycle: 1:1
Medium parameters used: f = 136 MHz; σ = 0.835 S/m; ε_r = 63.621; ρ = 1000 kg/m^3 ; Phantom section: Flat Section ; Measurement Standard: DASY5 (IEEE/IEC/ANSI C63.19-2011)

DASY Configuration:

- Probe: ES3DV3 - SN3250; ConvF(7.29, 7.29, 7.29); Calibrated: 3/13/2018;
- Sensor-Surface: 3mm (Mechanical Surface Detection)
- Electronics: DAE4 Sn874; Calibrated: 8/21/2017
- Phantom: ELI 4.0; Type: QD OVA 001 BB; Serial: 1057
- DASY52 52.10.0(1446); SEMCAD X 14.6.10(7417)

Configuration Body for IC-F1100DT/Body Back, P=5W, d=0mm/Zoom Scan (7x7x7) (7x8x7)/Cube 0: Measurement grid: dx=5mm, dy=5mm, dz=5mm
Reference Value = 20.52 V/m; Power Drift = -0.59 dB
Peak SAR (extrapolated) = 0.504 W/kg
SAR(1 g) = 0.339 W/kg; SAR(10 g) = 0.248 W/kg (SAR corrected for target medium)
Maximum value of SAR (measured) = 0.382 W/kg

Configuration Body for IC-F1100DT/Body Back, P=5W, d=0mm/Area Scan (61x111x1):
Interpolated grid: dx=1.500 mm, dy=1.500 mm
Maximum value of SAR (interpolated) = 0.384 W/kg

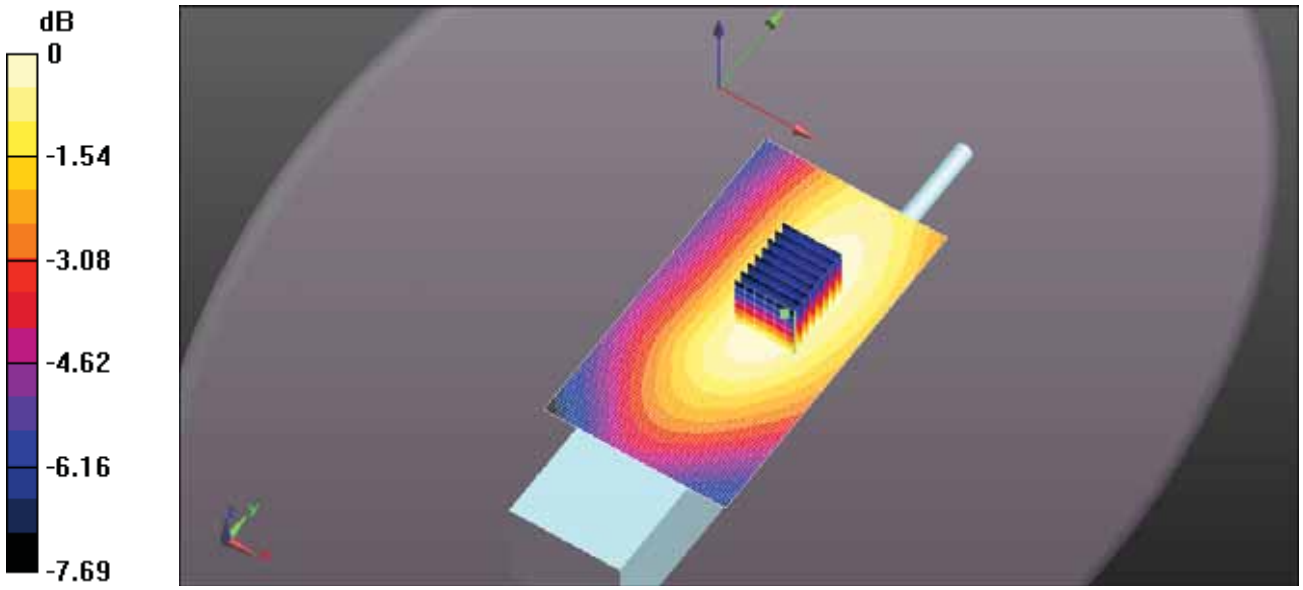

0 dB = 0.382 W/kg = -4.18 dBW/kg

Test Laboratory: Ultratech Group of Labs

FILE NAME: ICOM-489Q BODY FA-SC25V 136MHZ BP-280 HS-94.DA52:0

DUT: IC-F1100DT; Type: VHF Receiver; Serial: 32000201-0

Communication System: UID 10000, CW; Frequency: 136 MHz; Duty Cycle: 1:1
Medium parameters used: f = 136 MHz; σ = 0.835 S/m; ε_r = 63.621; ρ = 1000 kg/m^3 ; Phantom section: Flat Section ; Measurement Standard: DASY5 (IEEE/IEC/ANSI C63.19-2011)

DASY Configuration:

- Probe: ES3DV3 - SN3250; ConvF(7.29, 7.29, 7.29); Calibrated: 3/13/2018;
- Sensor-Surface: 3mm (Mechanical Surface Detection)
- Electronics: DAE4 Sn874; Calibrated: 8/21/2017
- Phantom: ELI 4.0; Type: QD OVA 001 BB; Serial: 1057
- DASY52 52.10.0(1446); SEMCAD X 14.6.10(7417)

Configuration Body for IC-F1100DT/Body Back, P=5W, d=0mm/Zoom Scan (7x7x7) (7x7x7)/Cube 0:

Measurement grid: dx=5mm, dy=5mm, dz=5mm
Reference Value = 34.74 V/m; Power Drift = -0.25 dB
Peak SAR (extrapolated) = 1.32 W/kg
SAR(1 g) = 0.901 W/kg; SAR(10 g) = 0.668 W/kg (SAR corrected for target medium)
Maximum value of SAR (measured) = 1.02 W/kg

Configuration Body for IC-F1100DT/Body Back, P=5W, d=0mm/Area Scan (61x111x1):

Interpolated grid: dx=1.500 mm, dy=1.500 mm
Maximum value of SAR (interpolated) = 1.01 W/kg

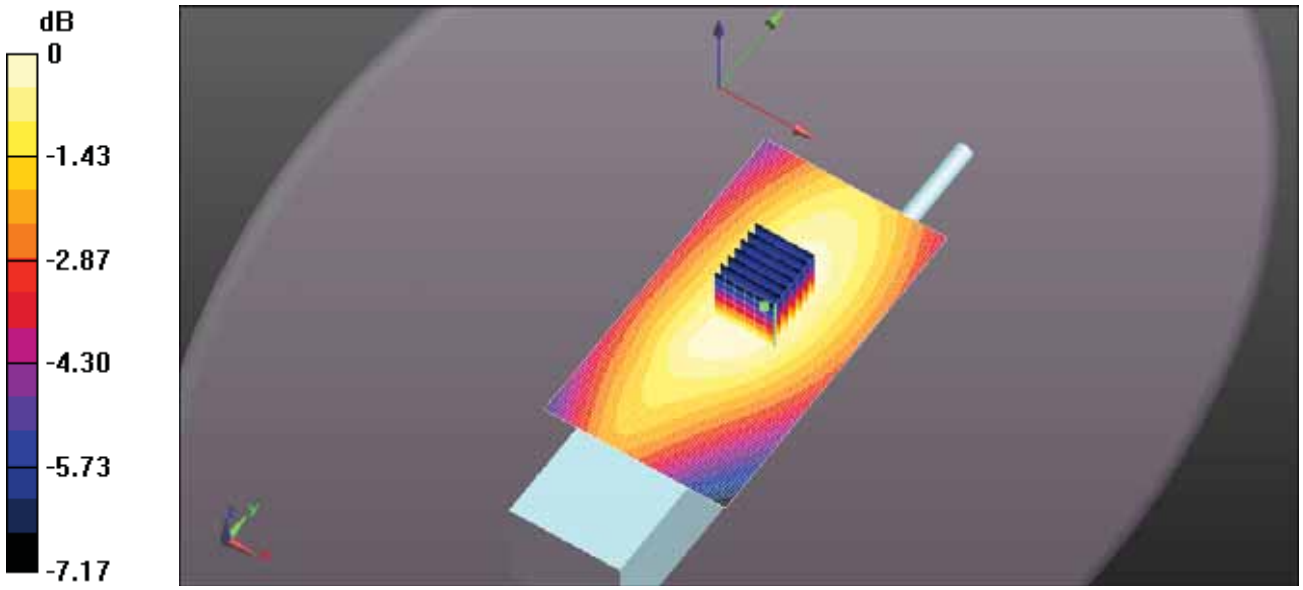

0 dB = 1.02 W/kg = 0.07 dBW/kg

EXHIBIT 2. HEAD SAR MEASUREMENTS

Antenna	Power (W)	CH	CH. Freq	HEAD SAR1g (W/Kg)	HEAD SAR10g (W/Kg)	Power Drift
				BP-280	BP-280	
			(MHz)	2400mAh	2400mAh	(dBm)
FA-SC25V 136-150 MHz	4.88	1	136	0.28	0.21	0.39
	5.29	5	143	0.39	0.30	-0.52
	5.18	10	150	0.32	0.24	-0.73
FA-SC28V 148-162 MHz	5.28	8	148	0.38	0.29	-1.36
	4.88	11	155	0.59	0.45	-0.6
	4.85	15	162	0.28	0.21	-0.68
FA-SC29V 160-174 MHz	4.88	13	160	0.36	0.27	0.05
	4.80	16	167	0.72	0.54	-0.62
	4.75	19	174	0.51	0.38	-0.05
FA-SC55V 150-174 MHz	5.18	10	150	0.31	0.24	-0.53
	4.89	12	156	0.45	0.34	-0.78
	4.85	15	162	0.37	0.28	-0.88
	4.80	18	168	0.24	0.19	-0.3
	4.75	19	174	0.12	0.09	0.77
FA-SC26VS 136-144 MHz	4.88	1	136	0.16	0.12	-0.38
	5.21	2	140	0.12	0.08	-1.84
	4.88	11	155	0.02	0.02	-0.09
FA-SC27VS 142-150 MHz	5.27	3	142	0.14	0.10	-0.27
	5.28	7	146	0.20	0.15	-0.36
	5.18	10	150	0.14	0.10	-1.3
FA-SC56VS 150-162 MHz	5.18	10	150	0.12	0.09	-1.15
	4.89	12	156	0.07	0.05	-0.43
	4.85	15	162	0.03	0.02	-1.01
FA-SC57VS 160-174 MHz	4.88	13	160	0.34	0.25	0.09
	4.80	16	167	0.18	0.13	-1.09
	4.75	19	174	0.05	0.04	-1.99

Antenna	Power (W)	CH	CH. Freq	HEAD SAR1g (W/Kg)	HEAD SAR10g (W/Kg)	Power Drift
				BP-280	BP-280	
			(MHz)	2400mAh	2400mAh	(dBm)
FA-S61VC 136MHz 174mm	4.88	1	136	0.40	0.31	-0.54
	5.29	4	142.3	0.36	0.28	-1.17
	5.24	9	148.7	0.33	0.25	-0.42
	4.88	11	155	0.17	0.13	-0.26
	4.88	14	161.3	0.11	0.08	-0.5
	4.79	17	167.7	0.06	0.05	0.53
	4.75	19	174	0.00	0.02	-1.93
FA-S61VC 140MHz 169mm	4.88	1	136	0.34	0.26	-0.49
	5.29	4	142.3	0.42	0.32	-0.8
	5.24	9	148.7	0.38	0.29	-0.18
	4.88	11	155	0.17	0.13	-0.83
	4.88	14	161.3	0.11	0.08	-0.79
	4.79	17	167.7	0.07	0.05	0.25
	4.75	19	174	0.04	0.03	1.05
FA-S61VC 145MHz 163mm	4.88	1	136	0.22	0.17	0.29
	5.29	4	142.3	0.28	0.21	-0.43
	5.24	9	148.7	0.35	0.26	-1.76
	4.88	11	155	0.33	0.25	-0.71
	4.88	14	161.3	0.18	0.14	-0.98
	4.79	17	167.7	0.12	0.09	0.16
	4.75	19	174	0.06	0.05	1.06
FA-S61VC 150MHz 157mm	4.88	1	136	0.15	0.11	0.85
	5.29	4	142.3	0.17	0.13	-0.62
	5.24	9	148.7	0.30	0.23	-0.97
	4.88	11	155	0.51	0.39	-0.6
	4.88	14	161.3	0.34	0.26	-0.67
	4.79	17	167.7	0.22	0.16	-0.1
	4.75	19	174	0.12	0.09	1.37
FA-S61VC 155MHz 151mm	4.88	1	136	0.07	0.05	1.11
	5.29	4	142.3	0.08	0.06	-0.43
	5.24	9	148.7	0.11	-0.08	-0.56
	4.88	11	155	0.24	0.18	-0.1
	4.88	14	161.3	0.44	0.34	0.19
	4.79	17	167.7	1.08	0.81	-0.29
	4.75	19	174	0.67	0.50	-0.39

Antenna	Power (W)	CH	CH. Freq	HEAD SAR1g (W/Kg)	HEAD SAR10g (W/Kg)	Power Drift
				BP-280	BP-280	
			(MHz)	2400mAh	2400mAh	(dBm)
FA-S61VC 160MHz 146mm	4.88	1	136	0.07	0.05	1.08
	5.29	4	142.3	0.08	0.06	-0.59
	5.24	9	148.7	0.10	0.08	-0.81
	4.88	11	155	0.22	0.17	-0.46
	4.88	14	161.3	0.37	0.28	-0.3
	4.79	17	167.7	0.57	0.43	-0.41
	4.75	19	174	0.31	0.23	-0.16
FA-S61VC 165MHz 141mm	4.88	1	136	0.05	0.04	0.94
	5.29	4	142.3	0.06	0.04	-0.11
	5.24	9	148.7	0.07	0.06	-0.32
	4.88	11	155	0.12	0.09	-1.07
	4.88	14	161.3	0.21	0.16	0.18
	4.79	17	167.7	0.41	0.31	0.36
	4.75	19	174	0.59	0.45	-0.45
FA-S61VC 170MHz 137mm	4.88	1	136	0.04	0.03	0.91
	5.29	4	142.3	0.04	0.03	-0.5
	5.24	9	148.7	0.06	0.05	-0.3
	4.88	11	155	0.11	0.09	-0.41
	4.88	14	161.3	0.15	0.11	0.23
	4.79	17	167.7	0.28	0.21	0.5
	4.75	19	174	0.52	0.39	-0.33
FA-S61VC 175MHz 133mm	4.88	1	136	0.03	0.03	-0.2
	5.29	4	142.3	0.04	0.03	-0.02
	5.24	9	148.7	0.05	0.04	-0.29
	4.88	11	155	0.09	0.06	-0.67
	4.88	14	161.3	0.12	0.09	0.43
	4.79	17	167.7	0.20	0.15	0.65
	4.75	19	174	0.42	0.32	0.22

Test Laboratory: Ultratech Group of Labs

FILE NAME: ICOM-489Q BODY FA-SC25V 136MHZ BP-280.DA52:0

DUT: IC-F1100DT; Type: VHF Receiver; Serial: 32000201-0

Communication System: UID 10000, CW; Frequency: 136 MHz; Duty Cycle: 1:1
Medium parameters used: f = 136 MHz; σ = 0.773 S/m; ε_r = 54.298; ρ = 1000 kg/m^3 ; Phantom section: Flat Section ; Measurement Standard: DASY5 (IEEE/IEC/ANSI C63.19-2011)

DASY Configuration:

- Probe: ES3DV3 - SN3250; ConvF(7.64, 7.64, 7.64); Calibrated: 3/13/2018;
- Sensor-Surface: 3mm (Mechanical Surface Detection)
- Electronics: DAE4 Sn874; Calibrated: 8/21/2017
- Phantom: ELI 4.0; Type: QD OVA 001 BB; Serial: 1057
- DASY52 52.10.0(1446); SEMCAD X 14.6.10(7417)

Configuration Head for IC-F1100DT/Head Front, P=5W, d=25mm/Zoom Scan (7x7x7) (7x7x7)/Cube 0: Measurement grid: dx=5mm, dy=5mm, dz=5mm
Reference Value = 25.88 V/m; Power Drift = 0.39 dB
Peak SAR (extrapolated) = 0.994 W/kg
SAR(1 g) = 0.684 W/kg; SAR(10 g) = 0.520 W/kg (SAR corrected for target medium)
Maximum value of SAR (measured) = 0.762 W/kg

Configuration Head for IC-F1100DT/Head Front, P=5W, d=25mm/Area Scan (61x101x1): Interpolated grid: dx=1.500 mm, dy=1.500 mm
Maximum value of SAR (interpolated) = 0.731 W/kg

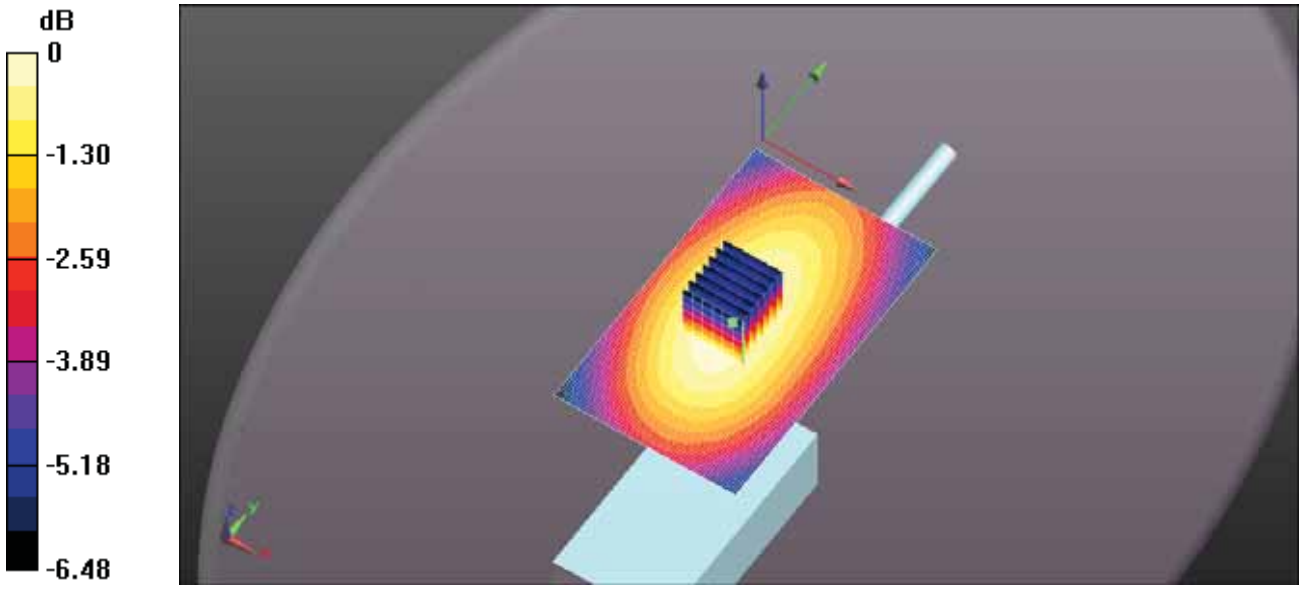

0 dB = 0.762 W/kg = -1.18 dBW/kg

Test Laboratory: Ultratech Group of Labs

FILE NAME: ICOM-489Q HEAD FA-SC25V 143MHZ.DA52:0

DUT: IC-F1100DT; Type: VHF Receiver; Serial: 32000201-0

Communication System: UID 10000, CW; Frequency: 143 MHz; Duty Cycle: 1:1
Medium parameters used (interpolated): f = 143 MHz; σ = 0.781 S/m; ε_r = 54.49; ρ = 1000 kg/m^3 ;
Phantom section: Flat Section ; Measurement Standard: DASY5 (IEEE/IEC/ANSI C63.19-2011)

DASY Configuration:

- Probe: ES3DV3 - SN3250; ConvF(7.64, 7.64, 7.64); Calibrated: 3/13/2018;
- Sensor-Surface: 3mm (Mechanical Surface Detection)
- Electronics: DAE4 Sn874; Calibrated: 8/21/2017
- Phantom: ELI 4.0; Type: QD OVA 001 BB; Serial: 1057
- DASY52 52.10.0(1446); SEMCAD X 14.6.10(7417)

Configuration Head for IC-F1100DT/Head Front, P=5W, d=25mm/Zoom Scan (7x7x7) (7x7x7)/Cube 0: Measurement grid: dx=5mm, dy=5mm, dz=5mm
Reference Value = 36.51 V/m; Power Drift = -0.52 dB
Peak SAR (extrapolated) = 1.64 W/kg
SAR(1 g) = 1.16 W/kg; SAR(10 g) = 0.888 W/kg (SAR corrected for target medium)
Maximum value of SAR (measured) = 1.28 W/kg
Configuration Head for IC-F1100DT/Head Front, P=5W, d=25mm/Area Scan (61x101x1): Interpolated grid: dx=1.500 mm, dy=1.500 mm
Maximum value of SAR (interpolated) = 1.33 W/kg

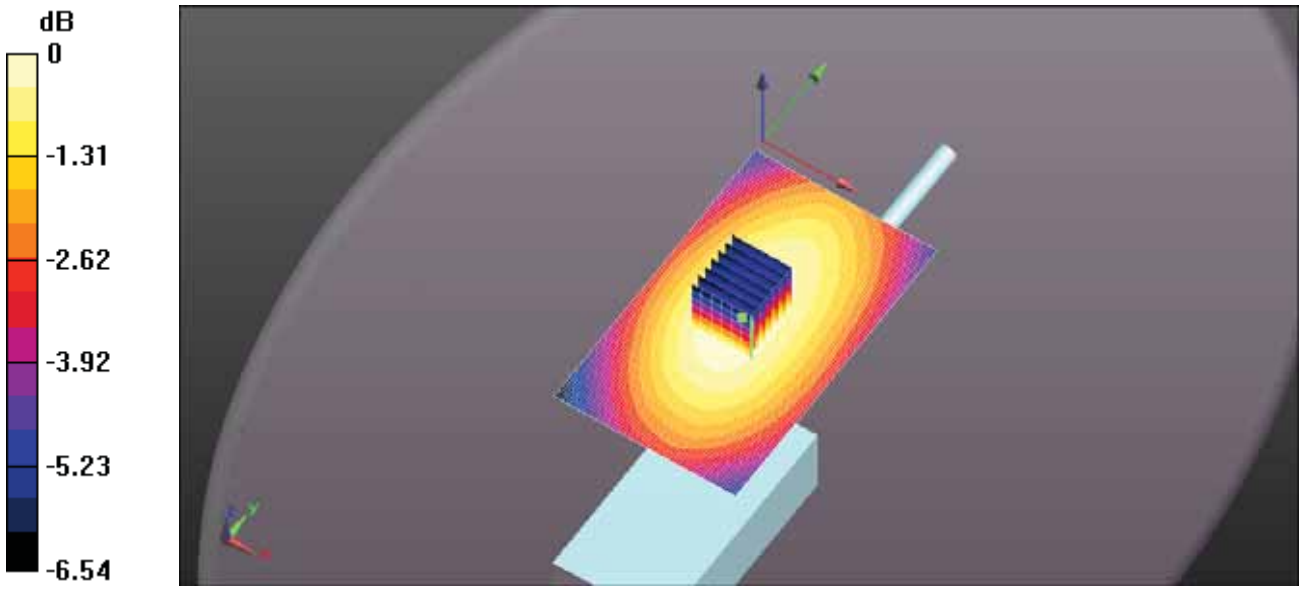

0 dB = 1.28 W/kg = 1.08 dBW/kg

Test Laboratory: Ultratech Group of Labs

FILE NAME: ICOM-489Q HEAD FA-SC25V 150MHZ.DA52:0

DUT: IC-F1100DT; Type: VHF Receiver; Serial: 32000201-0

Communication System: UID 10000, CW; Frequency: 150 MHz; Duty Cycle: 1:1
Medium parameters used: f = 150 MHz; σ = 0.788 S/m; ε_r = 54.389; ρ = 1000 kg/m^3 ; Phantom section: Flat Section ; Measurement Standard: DASY5 (IEEE/IEC/ANSI C63.19-2011)

DASY Configuration:

- Probe: ES3DV3 - SN3250; ConvF(7.64, 7.64, 7.64); Calibrated: 3/13/2018;
- Sensor-Surface: 3mm (Mechanical Surface Detection)
- Electronics: DAE4 Sn874; Calibrated: 8/21/2017
- Phantom: ELI 4.0; Type: QD OVA 001 BB; Serial: 1057
- DASY52 52.10.0(1446); SEMCAD X 14.6.10(7417)

Configuration Head for IC-F1100DT/Head Front, P=5W, d=25mm/Zoom Scan (7x7x7) (7x7x7)/Cube 0: Measurement grid: dx=5mm, dy=5mm, dz=5mm
Reference Value = 34.00 V/m; Power Drift = -0.73 dB
Peak SAR (extrapolated) = 1.37 W/kg
SAR(1 g) = 0.976 W/kg; SAR(10 g) = 0.742 W/kg (SAR corrected for target medium)
Maximum value of SAR (measured) = 1.09 W/kg

Configuration Head for IC-F1100DT/Head Front, P=5W, d=25mm/Area Scan (61x101x1): Interpolated grid: dx=1.500 mm, dy=1.500 mm
Maximum value of SAR (interpolated) = 1.12 W/kg

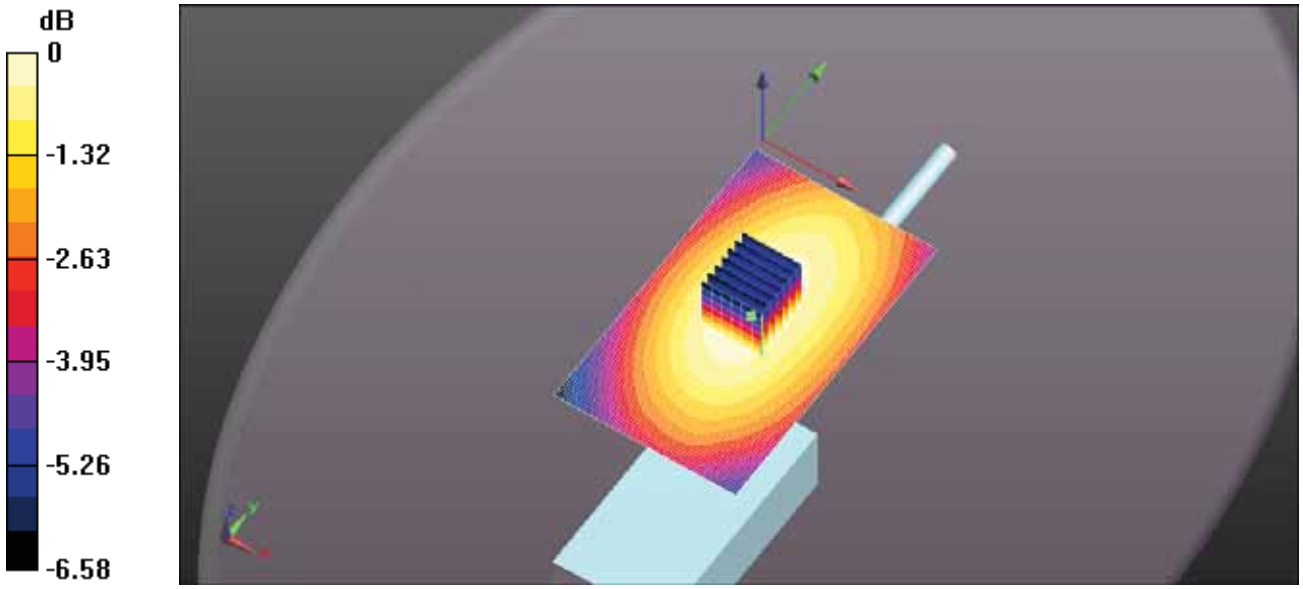

0 dB = 1.09 W/kg = 0.36 dBW/kg

Test Laboratory: Ultratech Group of Labs

FILE NAME: ICOM-489Q HEAD FA-SC28V 148MHZ.DA52:0

DUT: IC-F1100DT; Type: VHF Receiver; Serial: 32000201-0

Communication System: UID 10000, CW; Frequency: 148 MHz; Duty Cycle: 1:1
Medium parameters used: f = 148 MHz; σ = 0.786 S/m; ε_r = 54.334; ρ = 1000 kg/m^3 ; Phantom section: Flat Section ; Measurement Standard: DASY5 (IEEE/IEC/ANSI C63.19-2011)

DASY Configuration:

- Probe: ES3DV3 - SN3250; ConvF(7.64, 7.64, 7.64); Calibrated: 3/13/2018;
- Sensor-Surface: 3mm (Mechanical Surface Detection)
- Electronics: DAE4 Sn874; Calibrated: 8/21/2017
- Phantom: ELI 4.0; Type: QD OVA 001 BB; Serial: 1057
- DASY52 52.10.0(1446); SEMCAD X 14.6.10(7417)

Configuration Head for IC-F1100DT/Head Front, P=5W, d=25mm/Zoom Scan (7x7x7) (7x7x7)/Cube 0: Measurement grid: dx=5mm, dy=5mm, dz=5mm
Reference Value = 43.85 V/m; Power Drift = -1.36 dB
Peak SAR (extrapolated) = 1.95 W/kg
SAR(1 g) = 1.38 W/kg; SAR(10 g) = 1.05 W/kg (SAR corrected for target medium)
Maximum value of SAR (measured) = 1.52 W/kg

Configuration Head for IC-F1100DT/Head Front, P=5W, d=25mm/Area Scan (61x101x1): Interpolated grid: dx=1.500 mm, dy=1.500 mm
Maximum value of SAR (interpolated) = 1.75 W/kg

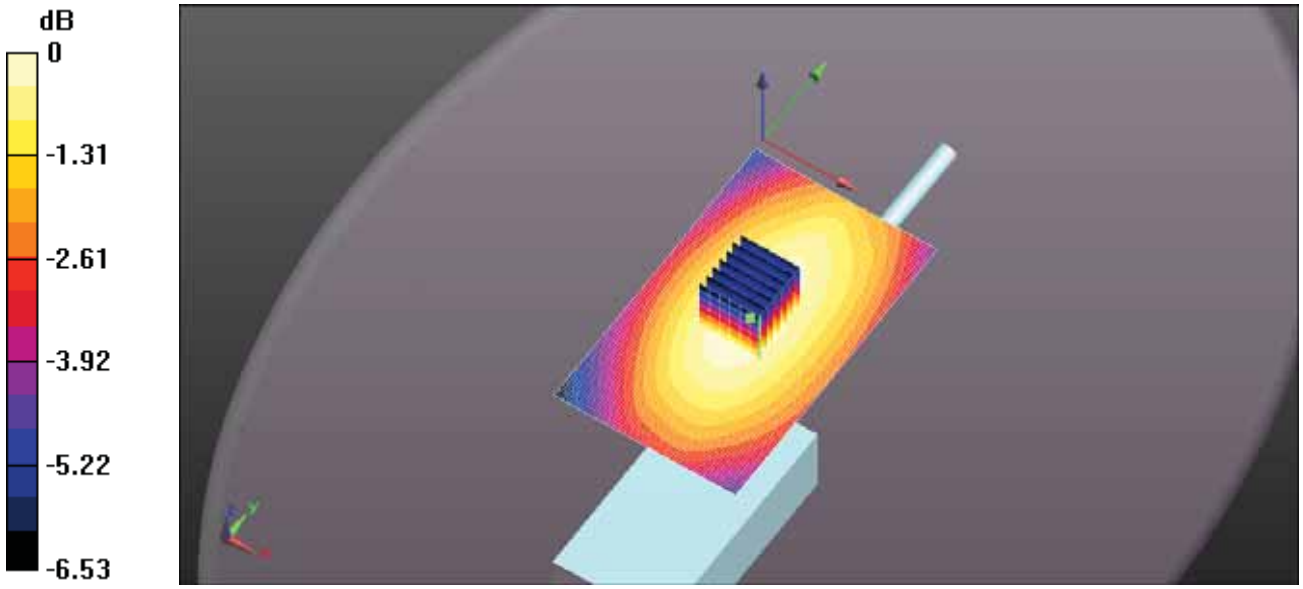

0 dB = 1.52 W/kg = 1.83 dBW/kg

Test Laboratory: Ultratech Group of Labs

FILE NAME: ICOM-489Q HEAD FA-SC28V 155MHZ.DA52:0

DUT: IC-F1100DT; Type: VHF Receiver; Serial: 32000201-0

Communication System: UID 10000, CW; Frequency: 155 MHz; Duty Cycle: 1:1
Medium parameters used (interpolated): f = 155 MHz; σ = 0.795 S/m; ε_r = 54.309; ρ = 1000 kg/m^3 ;
Phantom section: Flat Section ; Measurement Standard: DASY5 (IEEE/IEC/ANSI C63.19-2011)

DASY Configuration:

- Probe: ES3DV3 - SN3250; ConvF(7.64, 7.64, 7.64); Calibrated: 3/13/2018;
- Sensor-Surface: 3mm (Mechanical Surface Detection)
- Electronics: DAE4 Sn874; Calibrated: 8/21/2017
- Phantom: ELI 4.0; Type: QD OVA 001 BB; Serial: 1057
- DASY52 52.10.0(1446); SEMCAD X 14.6.10(7417)

Configuration Head for IC-F1100DT/Head Front, P=5W, d=25mm/Zoom Scan (7x7x7) (7x7x7)/Cube 0: Measurement grid: dx=5mm, dy=5mm, dz=5mm
Reference Value = 42.85 V/m; Power Drift = -0.60 dB
Peak SAR (extrapolated) = 2.34 W/kg
SAR(1 g) = 1.64 W/kg; SAR(10 g) = 1.25 W/kg (SAR corrected for target medium)
Maximum value of SAR (measured) = 1.83 W/kg
Configuration Head for IC-F1100DT/Head Front, P=5W, d=25mm/Area Scan (61x101x1): Interpolated grid: dx=1.500 mm, dy=1.500 mm
Maximum value of SAR (interpolated) = 1.86 W/kg

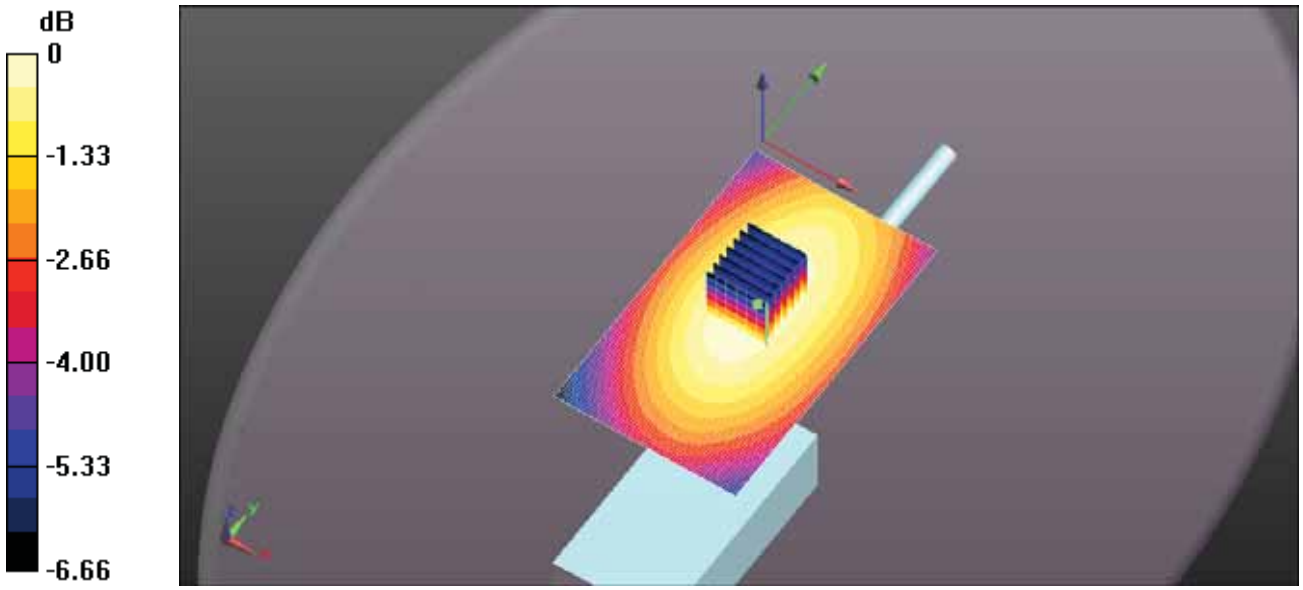

0 dB = 1.83 W/kg = 2.62 dBW/kg

Test Laboratory: Ultratech Group of Labs

FILE NAME: ICOM-489Q HEAD FA-SC28V 162MHZ.DA52:0

DUT: IC-F1100DT; Type: VHF Receiver; Serial: 32000201-0

Communication System: UID 10000, CW; Frequency: 162 MHz; Duty Cycle: 1:1
Medium parameters used: f = 162 MHz; σ = 0.803 S/m; ε_r = 54.448; ρ = 1000 kg/m^3 ; Phantom section: Flat Section ; Measurement Standard: DASY5 (IEEE/IEC/ANSI C63.19-2011)

DASY Configuration:

- Probe: ES3DV3 - SN3250; ConvF(7.64, 7.64, 7.64); Calibrated: 3/13/2018;
- Sensor-Surface: 3mm (Mechanical Surface Detection)
- Electronics: DAE4 Sn874; Calibrated: 8/21/2017
- Phantom: ELI 4.0; Type: QD OVA 001 BB; Serial: 1057
- DASY52 52.10.0(1446); SEMCAD X 14.6.10(7417)

Configuration Head for IC-F1100DT/Head Front, P=5W, d=25mm/Zoom Scan (7x7x7) (7x7x7)/Cube 0: Measurement grid: dx=5mm, dy=5mm, dz=5mm
Reference Value = 29.21 V/m; Power Drift = -0.68 dB
Peak SAR (extrapolated) = 1.17 W/kg
SAR(1 g) = 0.797 W/kg; SAR(10 g) = 0.601 W/kg (SAR corrected for target medium)
Maximum value of SAR (measured) = 0.889 W/kg

Configuration Head for IC-F1100DT/Head Front, P=5W, d=25mm/Area Scan (61x101x1): Interpolated grid: dx=1.500 mm, dy=1.500 mm
Maximum value of SAR (interpolated) = 0.924 W/kg

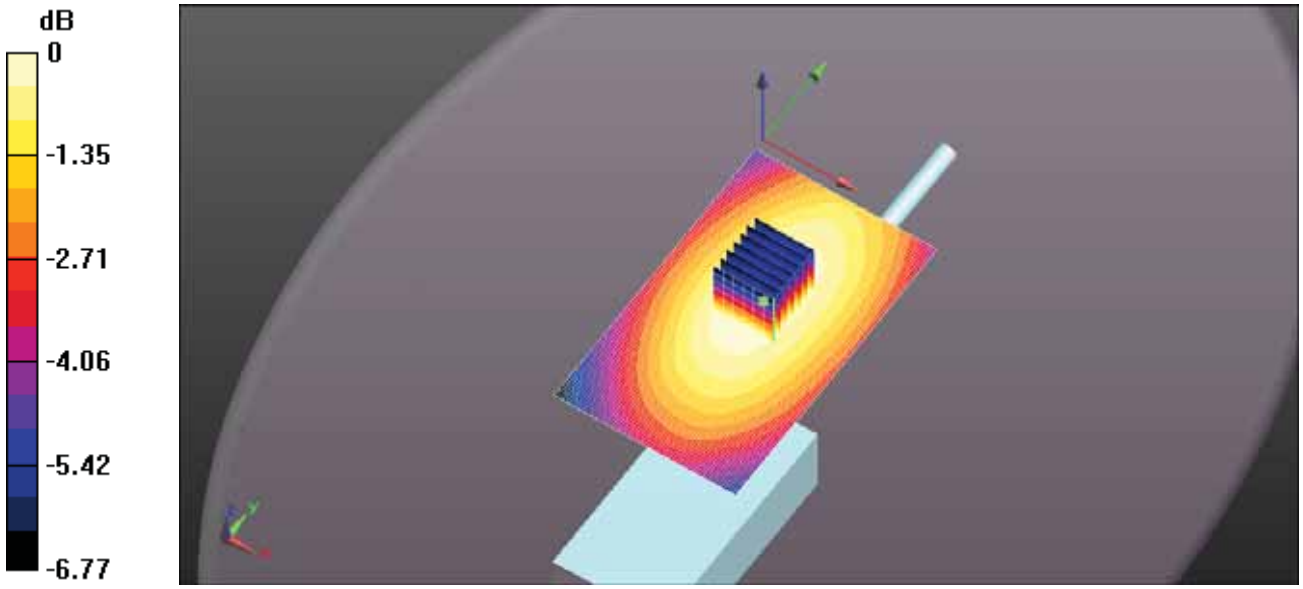

0 dB = 0.889 W/kg = -0.51 dBW/kg

Test Laboratory: Ultratech Group of Labs

FILE NAME: ICOM-489Q HEAD FA-SC29V 160MHZ.DA52:0

DUT: IC-F1100DT; Type: VHF Receiver; Serial: 32000201-0

Communication System: UID 10000, CW; Frequency: 160 MHz; Duty Cycle: 1:1
Medium parameters used: f = 160 MHz; σ = 0.8 S/m; ε_r = 54.436; ρ = 1000 kg/m^3 ; Phantom section: Flat Section ; Measurement Standard: DASY5 (IEEE/IEC/ANSI C63.19-2011)

DASY Configuration:

- Probe: ES3DV3 - SN3250; ConvF(7.64, 7.64, 7.64); Calibrated: 3/13/2018;
- Sensor-Surface: 3mm (Mechanical Surface Detection)
- Electronics: DAE4 Sn874; Calibrated: 8/21/2017
- Phantom: ELI 4.0; Type: QD OVA 001 BB; Serial: 1057
- DASY52 52.10.0(1446); SEMCAD X 14.6.10(7417)

Configuration Head for IC-F1100DT/Head Front, P=5W, d=25mm/Zoom Scan (7x7x7) (7x7x7)/Cube 0: Measurement grid: dx=5mm, dy=5mm, dz=5mm
Reference Value = 28.10 V/m; Power Drift = 0.05 dB
Peak SAR (extrapolated) = 1.24 W/kg
SAR(1 g) = 0.867 W/kg; SAR(10 g) = 0.655 W/kg (SAR corrected for target medium)
Maximum value of SAR (measured) = 0.970 W/kg

Configuration Head for IC-F1100DT/Head Front, P=5W, d=25mm/Area Scan (61x101x1): Interpolated grid: dx=1.500 mm, dy=1.500 mm
Maximum value of SAR (interpolated) = 0.929 W/kg

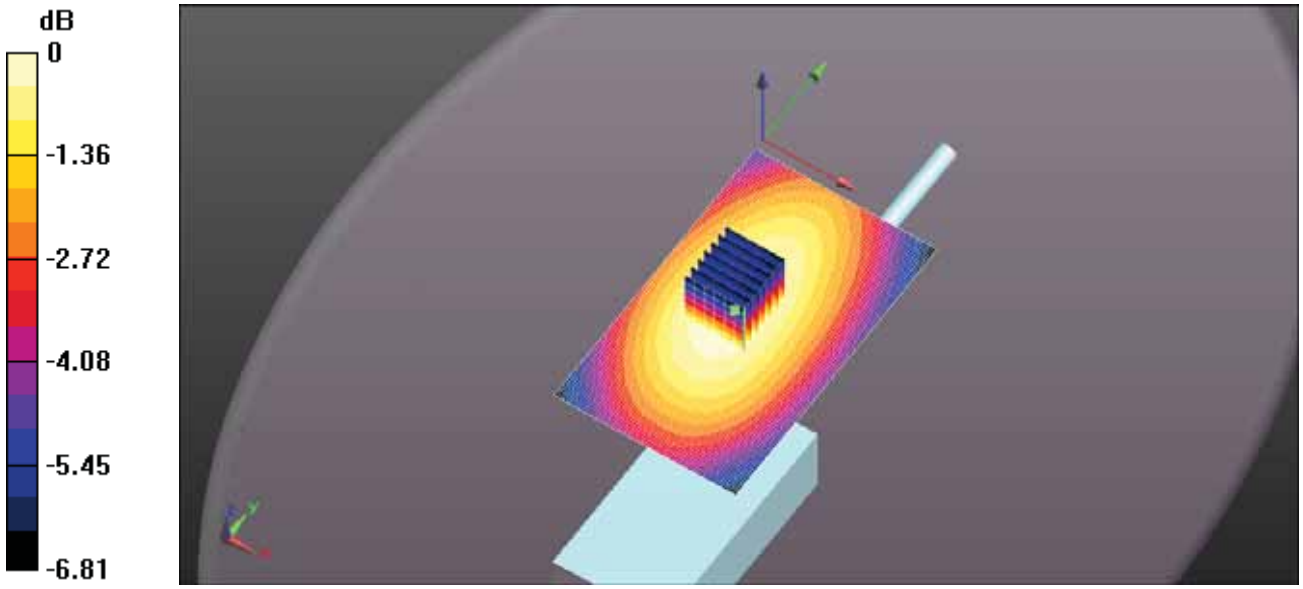

0 dB = 0.970 W/kg = -0.13 dBW/kg

Test Laboratory: Ultratech Group of Labs

FILE NAME: ICOM-489Q HEAD FA-SC29V 167MHZ.DA52:0

DUT: IC-F1100DT; Type: VHF Receiver; Serial: 32000201-0

Communication System: UID 10000, CW; Frequency: 167 MHz; Duty Cycle: 1:1
Medium parameters used (interpolated): f = 167 MHz; σ = 0.809 S/m; ε_r = 54.382; ρ = 1000 kg/m^3 ;
Phantom section: Flat Section ; Measurement Standard: DASY5 (IEEE/IEC/ANSI C63.19-2011)

DASY Configuration:

- Probe: ES3DV3 - SN3250; ConvF(7.64, 7.64, 7.64); Calibrated: 3/13/2018;
- Sensor-Surface: 3mm (Mechanical Surface Detection)
- Electronics: DAE4 Sn874; Calibrated: 8/21/2017
- Phantom: ELI 4.0; Type: QD OVA 001 BB; Serial: 1057
- DASY52 52.10.0(1446); SEMCAD X 14.6.10(7417)

Configuration Head for IC-F1100DT/Head Front, P=5W, d=25mm/Zoom Scan (7x7x7) (7x7x7)/Cube 0: Measurement grid: dx=5mm, dy=5mm, dz=5mm
Reference Value = 47.39 V/m; Power Drift = -0.62 dB
Peak SAR (extrapolated) = 2.86 W/kg
SAR(1 g) = 1.99 W/kg; SAR(10 g) = 1.49 W/kg (SAR corrected for target medium)
Maximum value of SAR (measured) = 2.21 W/kg
Configuration Head for IC-F1100DT/Head Front, P=5W, d=25mm/Area Scan (61x101x1): Interpolated grid: dx=1.500 mm, dy=1.500 mm
Maximum value of SAR (interpolated) = 2.29 W/kg

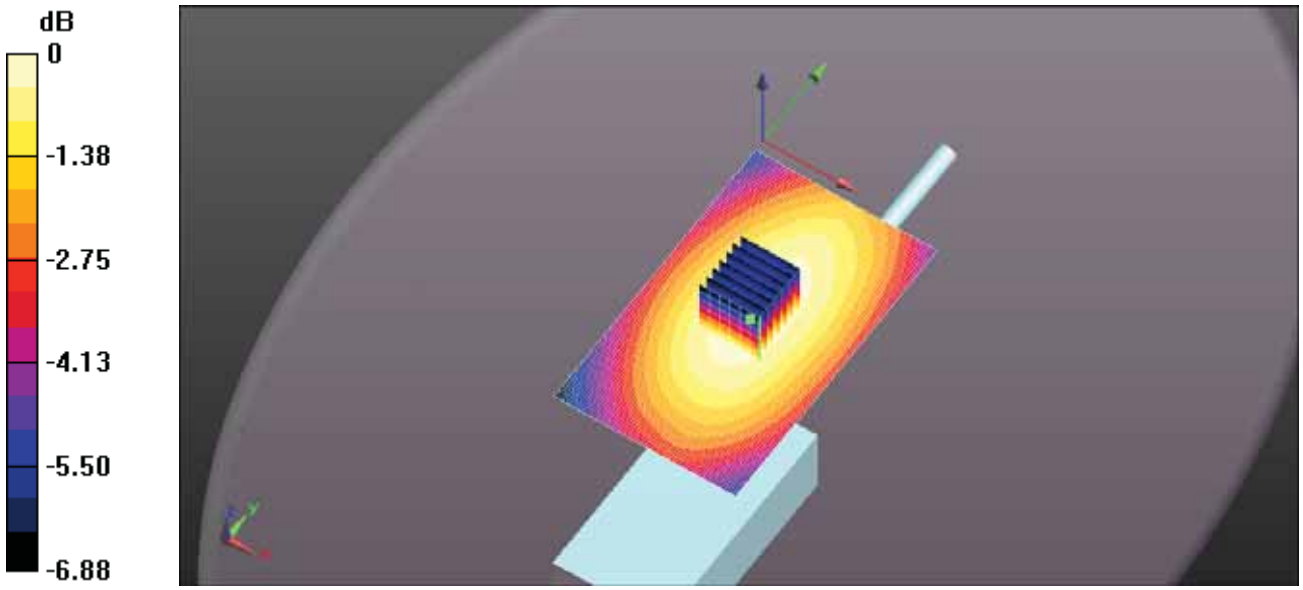

0 dB = 2.21 W/kg = 3.45 dBW/kg

Test Laboratory: Ultratech Group of Labs

FILE NAME: ICOM-489Q HEAD FA-SC29V 174MHZ.DA52:0

DUT: IC-F1100DT; Type: VHF Receiver; Serial: 32000201-0

Communication System: UID 10000, CW; Frequency: 174 MHz; Duty Cycle: 1:1
Medium parameters used: f = 174 MHz; σ = 0.818 S/m; ε_r = 54.228; ρ = 1000 kg/m^3 ; Phantom section: Flat Section ; Measurement Standard: DASY5 (IEEE/IEC/ANSI C63.19-2011)

DASY Configuration:

- Probe: ES3DV3 - SN3250; ConvF(7.64, 7.64, 7.64); Calibrated: 3/13/2018;
- Sensor-Surface: 3mm (Mechanical Surface Detection)
- Electronics: DAE4 Sn874; Calibrated: 8/21/2017
- Phantom: ELI 4.0; Type: QD OVA 001 BB; Serial: 1057
- DASY52 52.10.0(1446); SEMCAD X 14.6.10(7417)

Configuration Head for IC-F1100DT/Head Front, P=5W, d=25mm/Zoom Scan (7x7x7) (7x7x7)/Cube 0: Measurement grid: dx=5mm, dy=5mm, dz=5mm
Reference Value = 34.32 V/m; Power Drift = -0.05 dB
Peak SAR (extrapolated) = 1.77 W/kg
SAR(1 g) = 1.22 W/kg; SAR(10 g) = 0.919 W/kg (SAR corrected for target medium)
Maximum value of SAR (measured) = 1.37 W/kg

Configuration Head for IC-F1100DT/Head Front, P=5W, d=25mm/Area Scan (61x101x1): Interpolated grid: dx=1.500 mm, dy=1.500 mm
Maximum value of SAR (interpolated) = 1.30 W/kg

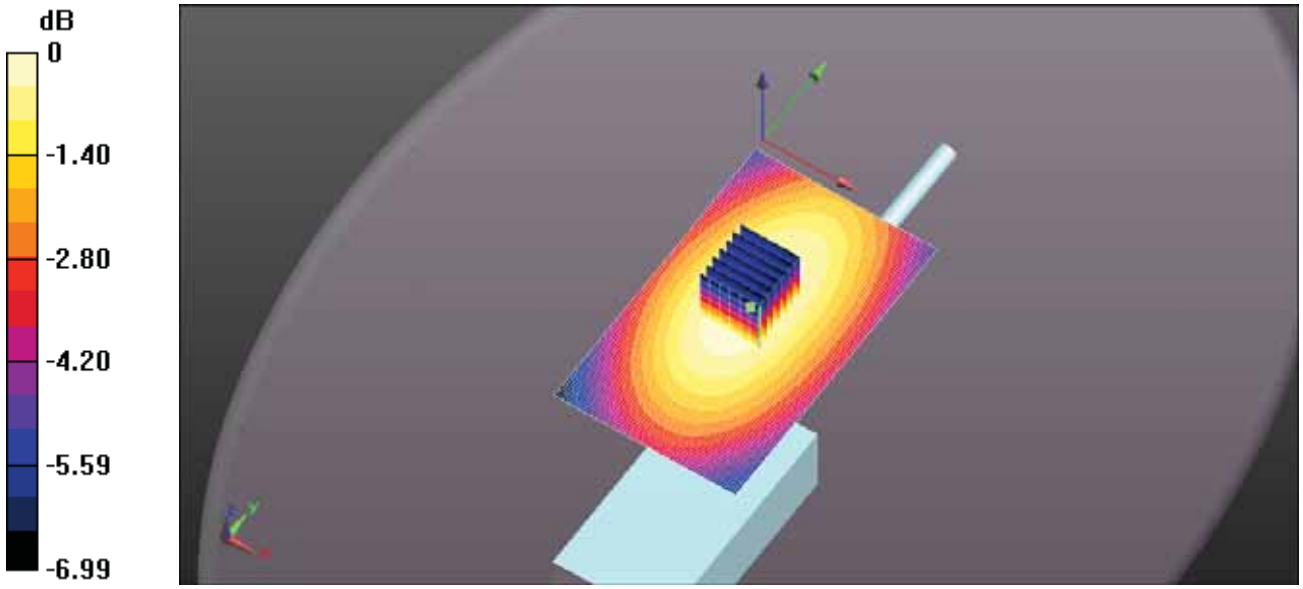

0 dB = 1.37 W/kg = 1.36 dBW/kg

Test Laboratory: Ultratech Group of Labs

FILE NAME: ICOM-489Q HEAD FA-SC55V 150MHZ.DA52:0

DUT: IC-F1100DT; Type: VHF Receiver; Serial: 32000201-0

Communication System: UID 10000, CW; Frequency: 150 MHz; Duty Cycle: 1:1
Medium parameters used: f = 150 MHz; σ = 0.788 S/m; ε_r = 54.389; ρ = 1000 kg/m^3 ; Phantom section: Flat Section ; Measurement Standard: DASY5 (IEEE/IEC/ANSI C63.19-2011)

DASY Configuration:

- Probe: ES3DV3 - SN3250; ConvF(7.64, 7.64, 7.64); Calibrated: 3/13/2018;
- Sensor-Surface: 3mm (Mechanical Surface Detection)
- Electronics: DAE4 Sn874; Calibrated: 8/21/2017
- Phantom: ELI 4.0; Type: QD OVA 001 BB; Serial: 1057
- DASY52 52.10.0(1446); SEMCAD X 14.6.10(7417)

Configuration Head for IC-F1100DT/Head Front, P=5W, d=25mm/Zoom Scan (7x7x7) (7x7x7)/Cube 0: Measurement grid: dx=5mm, dy=5mm, dz=5mm
Reference Value = 31.80 V/m; Power Drift = -0.53 dB
Peak SAR (extrapolated) = 1.30 W/kg
SAR(1 g) = 0.920 W/kg; SAR(10 g) = 0.699 W/kg (SAR corrected for target medium)
Maximum value of SAR (measured) = 1.02 W/kg

Configuration Head for IC-F1100DT/Head Front, P=5W, d=25mm/Area Scan (61x101x1): Interpolated grid: dx=1.500 mm, dy=1.500 mm
Maximum value of SAR (interpolated) = 1.04 W/kg

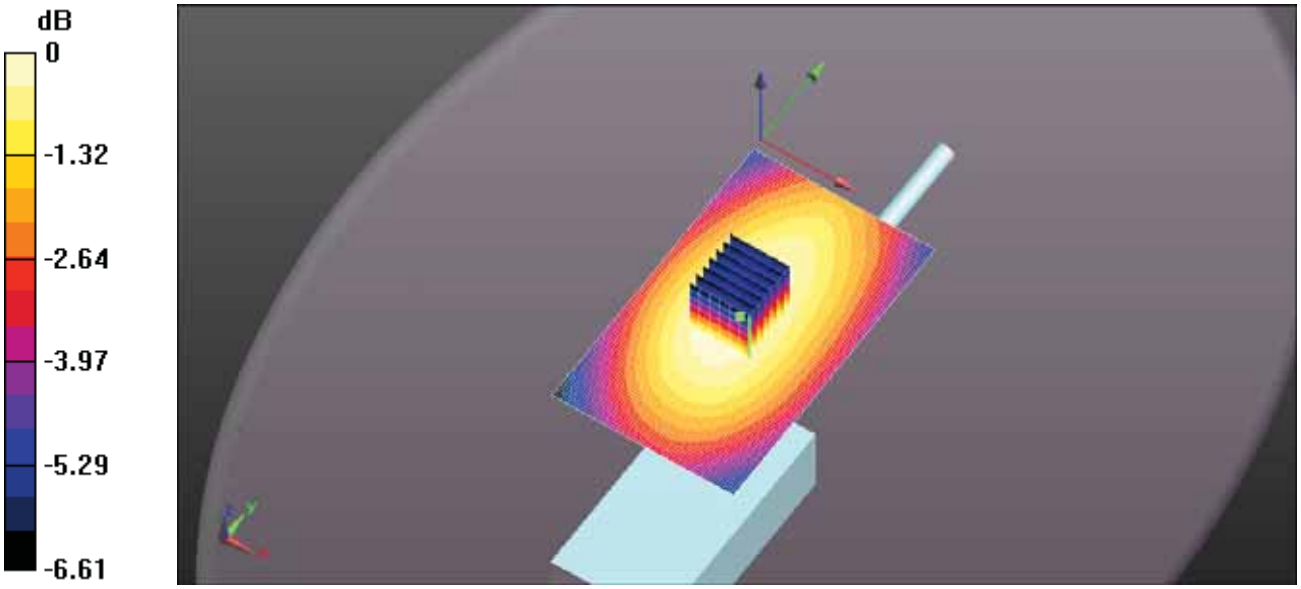

0 dB = 1.02 W/kg = 0.09 dBW/kg

Test Laboratory: Ultratech Group of Labs

FILE NAME: ICOM-489Q HEAD FA-SC55V 156MHZ.DA52:0

DUT: IC-F1100DT; Type: VHF Receiver; Serial: 32000201-0

Communication System: UID 10000, CW; Frequency: 156 MHz; Duty Cycle: 1:1
Medium parameters used: f = 156 MHz; σ = 0.796 S/m; ε_r = 54.367; ρ = 1000 kg/m^3 ; Phantom section: Flat Section ; Measurement Standard: DASY5 (IEEE/IEC/ANSI C63.19-2011)

DASY Configuration:

- Probe: ES3DV3 - SN3250; ConvF(7.64, 7.64, 7.64); Calibrated: 3/13/2018;
- Sensor-Surface: 3mm (Mechanical Surface Detection)
- Electronics: DAE4 Sn874; Calibrated: 8/21/2017
- Phantom: ELI 4.0; Type: QD OVA 001 BB; Serial: 1057
- DASY52 52.10.0(1446); SEMCAD X 14.6.10(7417)

Configuration Head for IC-F1100DT/Head Front, P=5W, d=25mm/Zoom Scan (7x7x7) (7x8x7)/Cube 0: Measurement grid: dx=5mm, dy=5mm, dz=5mm
Reference Value = 39.75 V/m; Power Drift = -0.78 dB
Peak SAR (extrapolated) = 1.90 W/kg
SAR(1 g) = 1.32 W/kg; SAR(10 g) = 1 W/kg (SAR corrected for target medium)
Maximum value of SAR (measured) = 1.48 W/kg

Configuration Head for IC-F1100DT/Head Front, P=5W, d=25mm/Area Scan (61x101x1): Interpolated grid: dx=1.500 mm, dy=1.500 mm
Maximum value of SAR (interpolated) = 1.53 W/kg

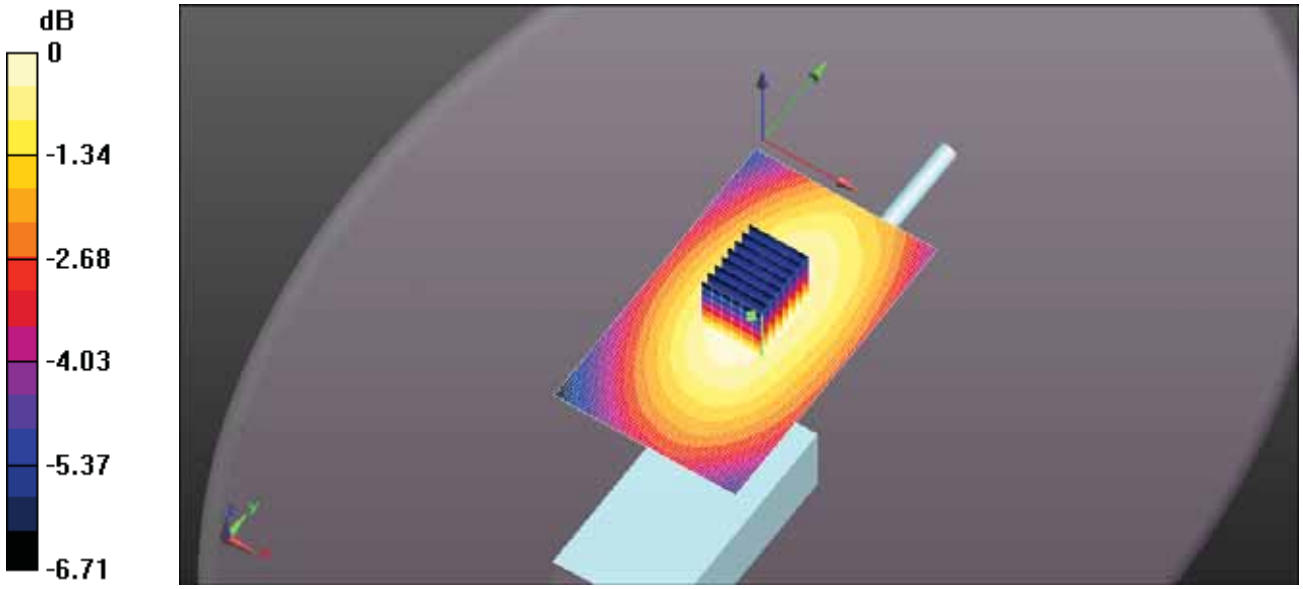

0 dB = 1.48 W/kg = 1.70 dBW/kg

Test Laboratory: Ultratech Group of Labs

FILE NAME: ICOM-489Q HEAD FA-SC55V 162MHZ.DA52:0

DUT: IC-F1100DT; Type: VHF Receiver; Serial: 32000201-0

Communication System: UID 10000, CW; Frequency: 162 MHz; Duty Cycle: 1:1
Medium parameters used: f = 162 MHz; σ = 0.803 S/m; ε_r = 54.448; ρ = 1000 kg/m^3 ; Phantom section: Flat Section ; Measurement Standard: DASY5 (IEEE/IEC/ANSI C63.19-2011)

DASY Configuration:

- Probe: ES3DV3 - SN3250; ConvF(7.64, 7.64, 7.64); Calibrated: 3/13/2018;
- Sensor-Surface: 3mm (Mechanical Surface Detection)
- Electronics: DAE4 Sn874; Calibrated: 8/21/2017
- Phantom: ELI 4.0; Type: QD OVA 001 BB; Serial: 1057
- DASY52 52.10.0(1446); SEMCAD X 14.6.10(7417)

Configuration Head for IC-F1100DT/Head Front, P=5W, d=25mm/Zoom Scan (7x7x7) (7x7x7)/Cube 0: Measurement grid: dx=5mm, dy=5mm, dz=5mm
Reference Value = 35.55 V/m; Power Drift = -0.88 dB
Peak SAR (extrapolated) = 1.55 W/kg
SAR(1 g) = 1.09 W/kg; SAR(10 g) = 0.822 W/kg (SAR corrected for target medium)
Maximum value of SAR (measured) = 1.21 W/kg

Configuration Head for IC-F1100DT/Head Front, P=5W, d=25mm/Area Scan (61x101x1): Interpolated grid: dx=1.500 mm, dy=1.500 mm
Maximum value of SAR (interpolated) = 1.28 W/kg

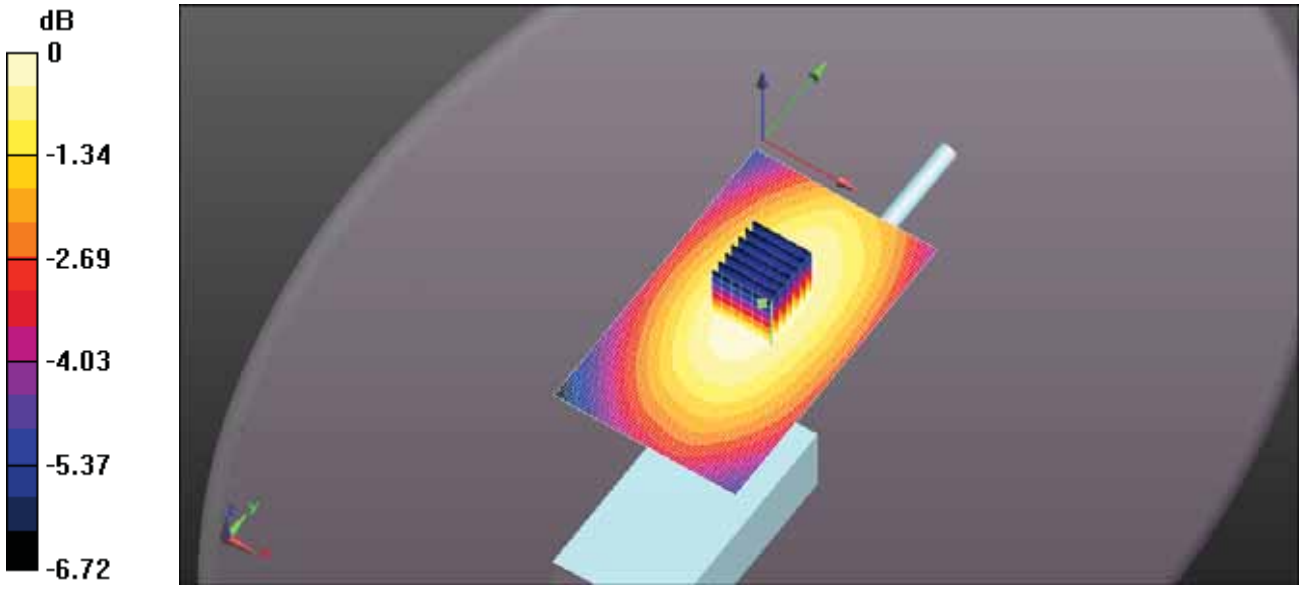

0 dB = 1.21 W/kg = 0.83 dBW/kg

Test Laboratory: Ultratech Group of Labs

FILE NAME: ICOM-489Q HEAD FA-SC55V 168MHZ.DA52:0

DUT: IC-F1100DT; Type: VHF Receiver; Serial: 32000201-0

Communication System: UID 10000, CW; Frequency: 168 MHz; Duty Cycle: 1:1
Medium parameters used: f = 168 MHz; σ = 0.81 S/m; ε_r = 54.329; ρ = 1000 kg/m^3 ; Phantom section: Flat Section ; Measurement Standard: DASY5 (IEEE/IEC/ANSI C63.19-2011)

DASY Configuration:

- Probe: ES3DV3 - SN3250; ConvF(7.64, 7.64, 7.64); Calibrated: 3/13/2018;
- Sensor-Surface: 3mm (Mechanical Surface Detection)
- Electronics: DAE4 Sn874; Calibrated: 8/21/2017
- Phantom: ELI 4.0; Type: QD OVA 001 BB; Serial: 1057
- DASY52 52.10.0(1446); SEMCAD X 14.6.10(7417)

Configuration Head for IC-F1100DT/Head Front, P=5W, d=25mm/Zoom Scan (7x7x7) (7x7x7)/Cube 0: Measurement grid: dx=5mm, dy=5mm, dz=5mm
Reference Value = 24.09 V/m; Power Drift = -0.30 dB
Peak SAR (extrapolated) = 0.898 W/kg
SAR(1 g) = 0.629 W/kg; SAR(10 g) = 0.476 W/kg (SAR corrected for target medium)
Maximum value of SAR (measured) = 0.699 W/kg

Configuration Head for IC-F1100DT/Head Front, P=5W, d=25mm/Area Scan (61x101x1): Interpolated grid: dx=1.500 mm, dy=1.500 mm
Maximum value of SAR (interpolated) = 0.693 W/kg

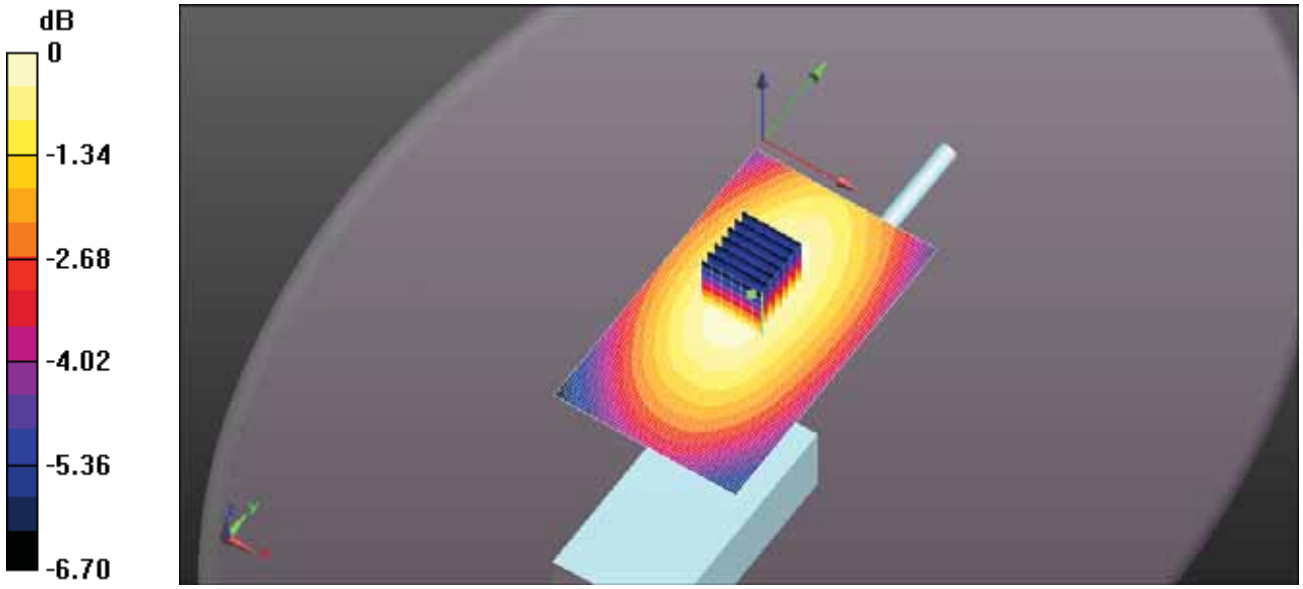

0 dB = 0.699 W/kg = -1.55 dBW/kg

Test Laboratory: Ultratech Group of Labs

FILE NAME: ICOM-489Q HEAD FA-SC55V 174MHZ.DA52:0

DUT: IC-F1100DT; Type: VHF Receiver; Serial: 32000201-0

Communication System: UID 10000, CW; Frequency: 174 MHz; Duty Cycle: 1:1
Medium parameters used: f = 174 MHz; σ = 0.818 S/m; ε_r = 54.228; ρ = 1000 kg/m^3 ; Phantom section: Flat Section ; Measurement Standard: DASY5 (IEEE/IEC/ANSI C63.19-2011)

DASY Configuration:

- Probe: ES3DV3 - SN3250; ConvF(7.64, 7.64, 7.64); Calibrated: 3/13/2018;
- Sensor-Surface: 3mm (Mechanical Surface Detection)
- Electronics: DAE4 Sn874; Calibrated: 8/21/2017
- Phantom: ELI 4.0; Type: QD OVA 001 BB; Serial: 1057
- DASY52 52.10.0(1446); SEMCAD X 14.6.10(7417)

Configuration Head for IC-F1100DT/Head Front, P=5W, d=25mm/Zoom Scan (7x7x7) (8x7x7)/Cube 0: Measurement grid: dx=5mm, dy=5mm, dz=5mm
Reference Value = 15.06 V/m; Power Drift = 0.77 dB
Peak SAR (extrapolated) = 0.414 W/kg
SAR(1 g) = 0.289 W/kg; SAR(10 g) = 0.218 W/kg (SAR corrected for target medium)
Maximum value of SAR (measured) = 0.322 W/kg

Configuration Head for IC-F1100DT/Head Front, P=5W, d=25mm/Area Scan (61x101x1): Interpolated grid: dx=1.500 mm, dy=1.500 mm
Maximum value of SAR (interpolated) = 0.286 W/kg

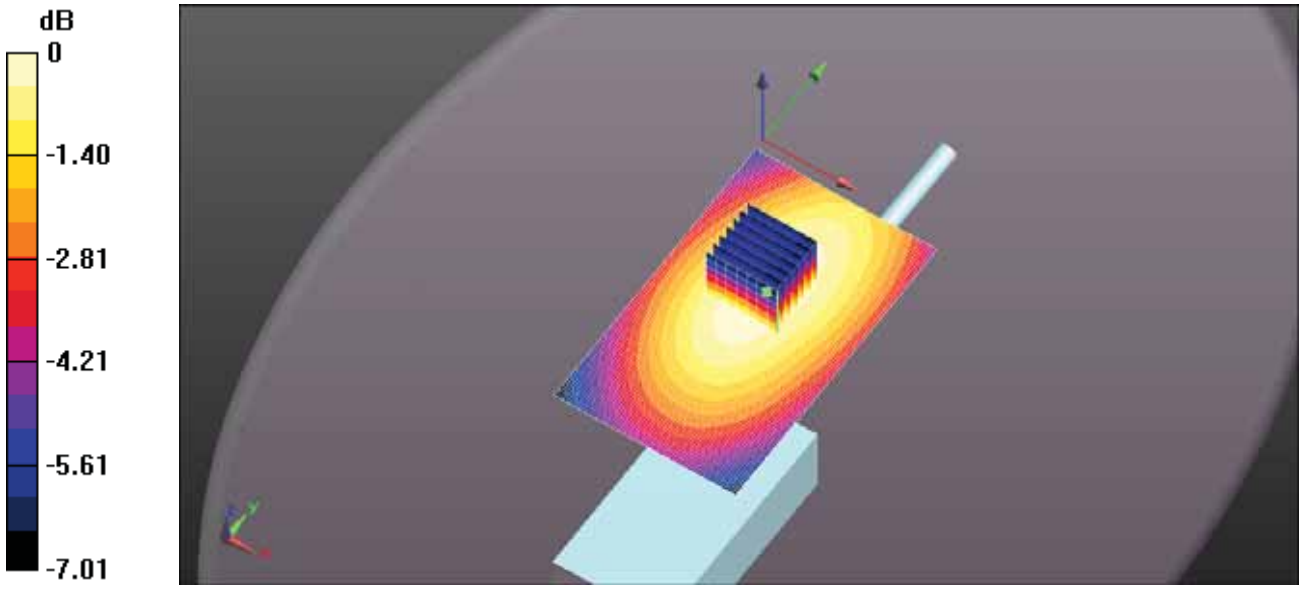

0 dB = 0.322 W/kg = -4.93 dBW/kg

Test Laboratory: Ultratech Group of Labs

FILE NAME: ICOM-489Q HEAD FA-SC26VS 136MHZ.DA52:0

DUT: IC-F1100DT; Type: VHF Receiver; Serial: 32000201-0

Communication System: UID 10000, CW; Frequency: 136 MHz; Duty Cycle: 1:1
Medium parameters used: f = 136 MHz; σ = 0.773 S/m; ε_r = 54.298; ρ = 1000 kg/m^3 ; Phantom section: Flat Section ; Measurement Standard: DASY5 (IEEE/IEC/ANSI C63.19-2011)

DASY Configuration:

- Probe: ES3DV3 - SN3250; ConvF(7.64, 7.64, 7.64); Calibrated: 3/13/2018;
- Sensor-Surface: 3mm (Mechanical Surface Detection)
- Electronics: DAE4 Sn874; Calibrated: 8/21/2017
- Phantom: ELI 4.0; Type: QD OVA 001 BB; Serial: 1057
- DASY52 52.10.0(1446); SEMCAD X 14.6.10(7417)

Configuration Head for IC-F1100DT/Head Front, P=5W, d=25mm/Zoom Scan (7x7x7) (7x10x7)/Cube 0: Measurement grid: dx=5mm, dy=5mm, dz=5mm
Reference Value = 20.70 V/m; Power Drift = -0.38 dB
Peak SAR (extrapolated) = 0.699 W/kg
SAR(1 g) = 0.428 W/kg; SAR(10 g) = 0.310 W/kg (SAR corrected for target medium)
Maximum value of SAR (measured) = 0.488 W/kg

Configuration Head for IC-F1100DT/Head Front, P=5W, d=25mm/Area Scan (61x101x1): Interpolated grid: dx=1.500 mm, dy=1.500 mm
Maximum value of SAR (interpolated) = 0.497 W/kg

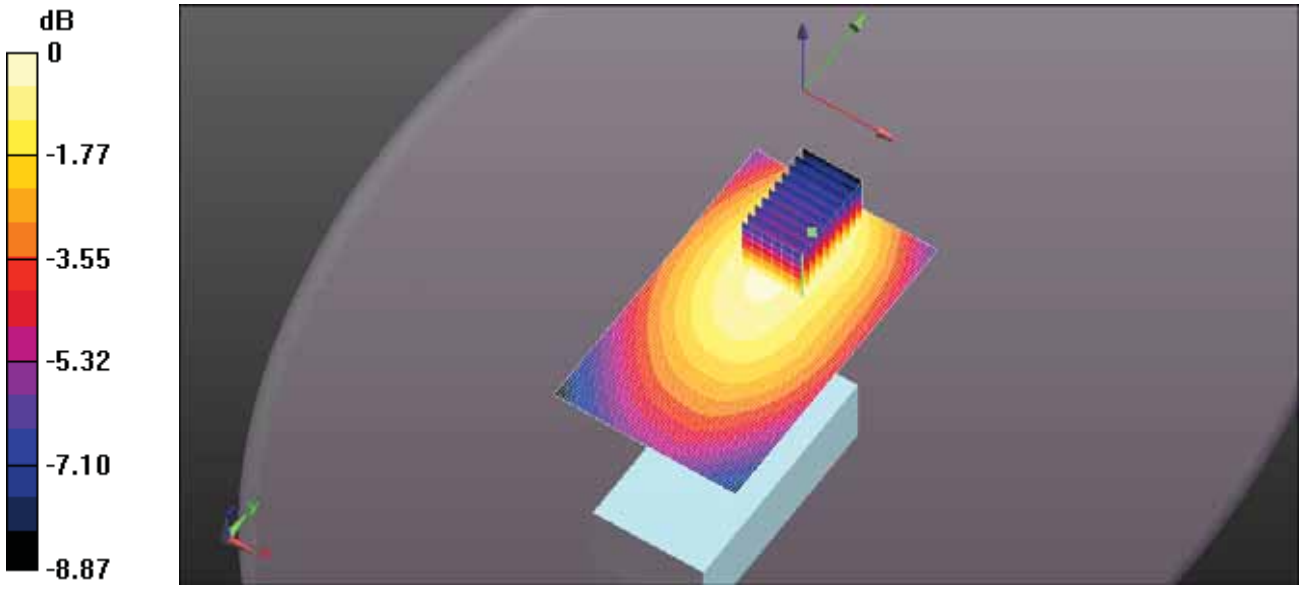

0 dB = 0.488 W/kg = -3.12 dBW/kg

Test Laboratory: Ultratech Group of Labs

FILE NAME: ICOM-489Q HEAD FA-SC26VS 140MHZ.DA52:0

DUT: IC-F1100DT; Type: VHF Receiver; Serial: 32000201-0

Communication System: UID 10000, CW; Frequency: 140 MHz; Duty Cycle: 1:1
Medium parameters used: f = 140 MHz; σ = 0.778 S/m; ε_r = 54.341; ρ = 1000 kg/m^3 ; Phantom section: Flat Section ; Measurement Standard: DASY5 (IEEE/IEC/ANSI C63.19-2011)

DASY Configuration:

- Probe: ES3DV3 - SN3250; ConvF(7.64, 7.64, 7.64); Calibrated: 3/13/2018;
- Sensor-Surface: 3mm (Mechanical Surface Detection)
- Electronics: DAE4 Sn874; Calibrated: 8/21/2017
- Phantom: ELI 4.0; Type: QD OVA 001 BB; Serial: 1057
- DASY52 52.10.0(1446); SEMCAD X 14.6.10(7417)

Configuration Head for IC-F1100DT/Head Front, P=5W, d=25mm/Zoom Scan (7x7x7) (7x9x7)/Cube 0: Measurement grid: dx=5mm, dy=5mm, dz=5mm
Reference Value = 25.75 V/m; Power Drift = -1.84 dB
Peak SAR (extrapolated) = 0.780 W/kg
SAR(1 g) = 0.470 W/kg; SAR(10 g) = 0.338 W/kg (SAR corrected for target medium)
Maximum value of SAR (measured) = 0.535 W/kg

Configuration Head for IC-F1100DT/Head Front, P=5W, d=25mm/Area Scan (61x101x1): Interpolated grid: dx=1.500 mm, dy=1.500 mm
Maximum value of SAR (interpolated) = 0.589 W/kg

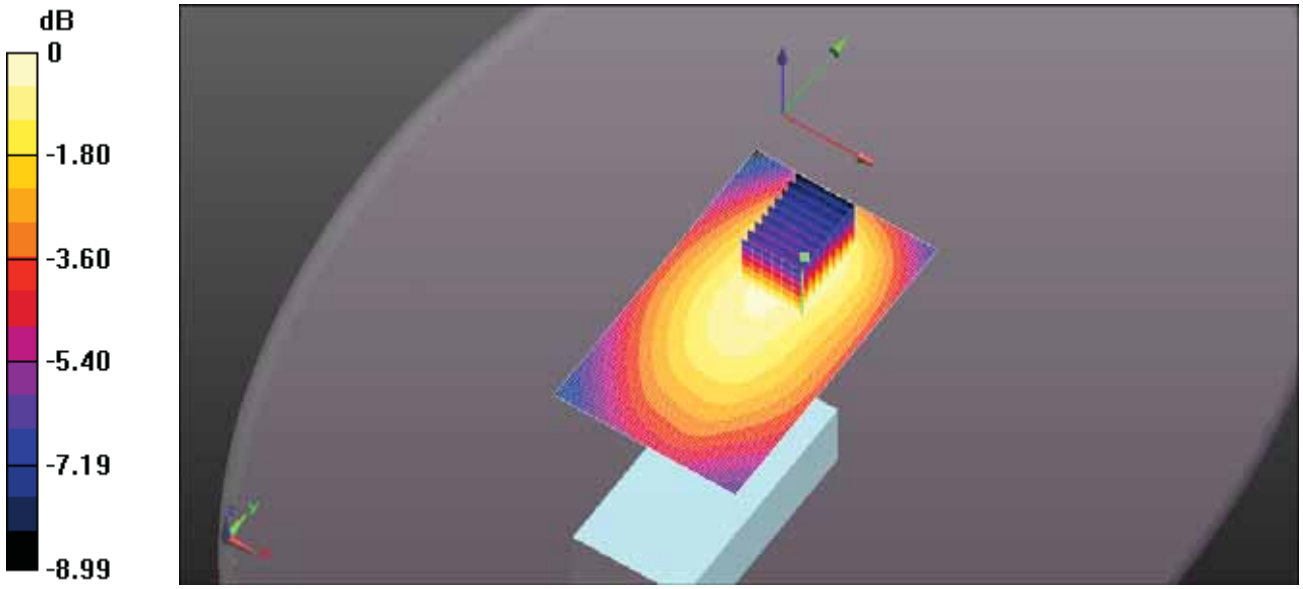

0 dB = 0.535 W/kg = -2.71 dBW/kg

Test Laboratory: Ultratech Group of Labs

FILE NAME: ICOM-489Q HEAD FA-SC26VS 155MHZ.DA52:0

DUT: IC-F1100DT; Type: VHF Receiver; Serial: 32000201-0

Communication System: UID 10000, CW; Frequency: 155 MHz; Duty Cycle: 1:1
Medium parameters used (interpolated): f = 155 MHz; σ = 0.795 S/m; ε_r = 54.309; ρ = 1000 kg/m^3 ;
Phantom section: Flat Section ; Measurement Standard: DASY5 (IEEE/IEC/ANSI C63.19-2011)

DASY Configuration:

- Probe: ES3DV3 - SN3250; ConvF(7.64, 7.64, 7.64); Calibrated: 3/13/2018;
- Sensor-Surface: 3mm (Mechanical Surface Detection)
- Electronics: DAE4 Sn874; Calibrated: 8/21/2017
- Phantom: ELI 4.0; Type: QD OVA 001 BB; Serial: 1057
- DASY52 52.10.0(1446); SEMCAD X 14.6.10(7417)

Configuration Head for IC-F1100DT/Head Front, P=5W, d=25mm/Zoom Scan (7x7x7) (7x8x7)/Cube 0: Measurement grid: dx=5mm, dy=5mm, dz=5mm
Reference Value = 6.928 V/m; Power Drift = -0.09 dB
Peak SAR (extrapolated) = 0.0940 W/kg
SAR(1 g) = 0.058 W/kg; SAR(10 g) = 0.041 W/kg (SAR corrected for target medium)
Maximum value of SAR (measured) = 0.0656 W/kg
Configuration Head for IC-F1100DT/Head Front, P=5W, d=25mm/Area Scan (61x101x1): Interpolated grid: dx=1.500 mm, dy=1.500 mm
Maximum value of SAR (interpolated) = 0.0666 W/kg

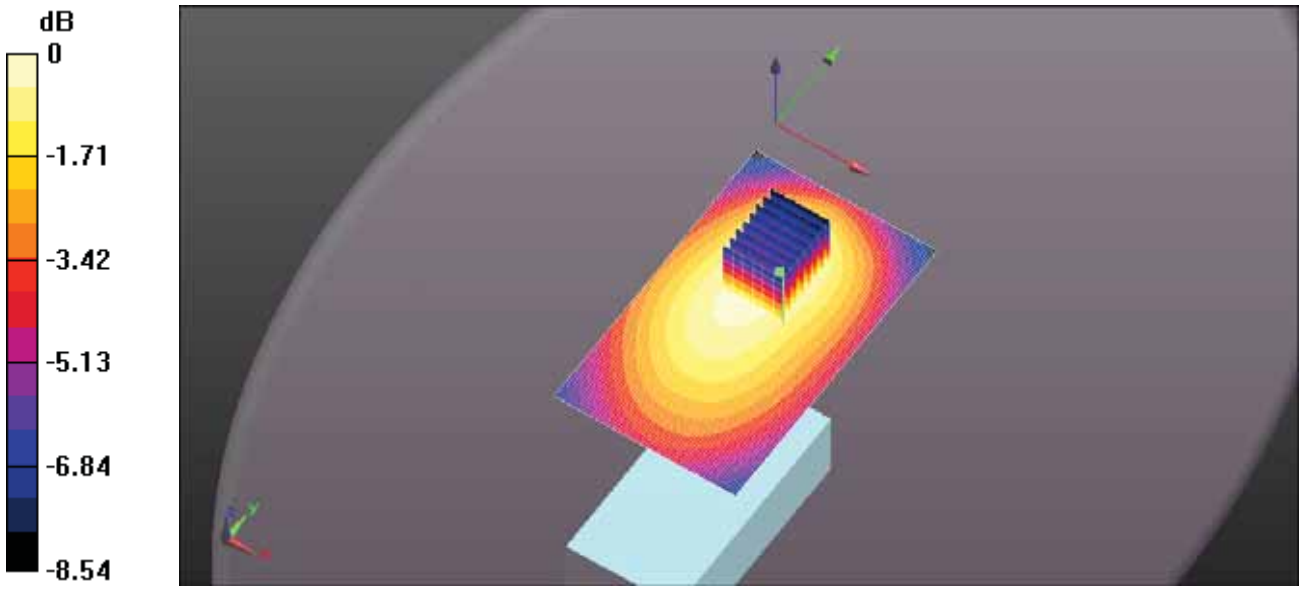

0 dB = 0.0656 W/kg = -11.83 dBW/kg

Test Laboratory: Ultratech Group of Labs

FILE NAME: ICOM-489Q HEAD FA-SC27VS 142MHZ.DA52:0

DUT: IC-F1100DT; Type: VHF Receiver; Serial: 32000201-0

Communication System: UID 10000, CW; Frequency: 142 MHz; Duty Cycle: 1:1
Medium parameters used: f = 142 MHz; σ = 0.779 S/m; ε_r = 54.488; ρ = 1000 kg/m^3 ; Phantom section: Flat Section ; Measurement Standard: DASY5 (IEEE/IEC/ANSI C63.19-2011)

DASY Configuration:

- Probe: ES3DV3 - SN3250; ConvF(7.64, 7.64, 7.64); Calibrated: 3/13/2018;
- Sensor-Surface: 3mm (Mechanical Surface Detection)
- Electronics: DAE4 Sn874; Calibrated: 8/21/2017
- Phantom: ELI 4.0; Type: QD OVA 001 BB; Serial: 1057
- DASY52 52.10.0(1446); SEMCAD X 14.6.10(7417)

Configuration Head for IC-F1100DT/Head Front, P=5W, d=25mm/Zoom Scan (7x7x7) (7x8x7)/Cube 0: Measurement grid: dx=5mm, dy=5mm, dz=5mm
Reference Value = 19.46 V/m; Power Drift = -0.28 dB
Peak SAR (extrapolated) = 0.609 W/kg
SAR(1 g) = 0.379 W/kg; SAR(10 g) = 0.277 W/kg (SAR corrected for target medium)
Maximum value of SAR (measured) = 0.431 W/kg

Configuration Head for IC-F1100DT/Head Front, P=5W, d=25mm/Area Scan (61x101x1): Interpolated grid: dx=1.500 mm, dy=1.500 mm
Maximum value of SAR (interpolated) = 0.441 W/kg

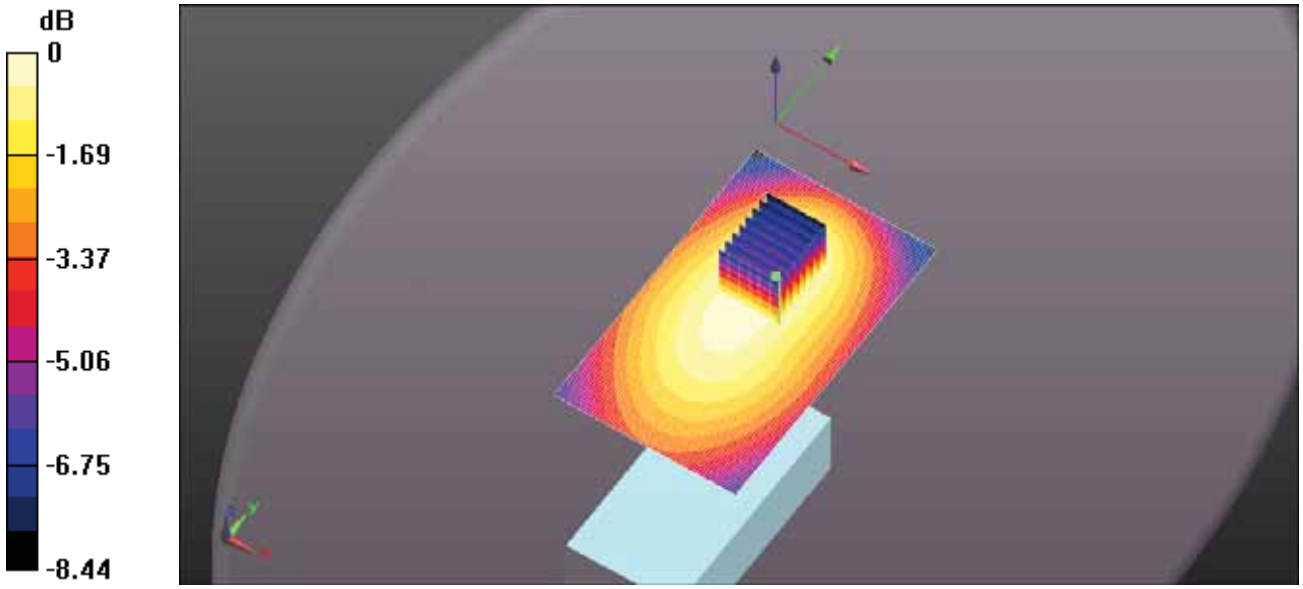

0 dB = 0.431 W/kg = -3.65 dBW/kg

Test Laboratory: Ultratech Group of Labs

FILE NAME: ICOM-489Q HEAD FA-SC27VS 146MHZ.DA52:0

DUT: IC-F1100DT; Type: VHF Receiver; Serial: 32000201-0

Communication System: UID 10000, CW; Frequency: 146 MHz; Duty Cycle: 1:1
Medium parameters used: f = 146 MHz; σ = 0.785 S/m; ε_r = 54.474; ρ = 1000 kg/m^3 ; Phantom section: Flat Section ; Measurement Standard: DASY5 (IEEE/IEC/ANSI C63.19-2011)

DASY Configuration:

- Probe: ES3DV3 - SN3250; ConvF(7.64, 7.64, 7.64); Calibrated: 3/13/2018;
- Sensor-Surface: 3mm (Mechanical Surface Detection)
- Electronics: DAE4 Sn874; Calibrated: 8/21/2017
- Phantom: ELI 4.0; Type: QD OVA 001 BB; Serial: 1057
- DASY52 52.10.0(1446); SEMCAD X 14.6.10(7417)

Configuration Head for IC-F1100DT/Head Front, P=5W, d=25mm/Zoom Scan (7x7x7) (7x8x7)/Cube 0: Measurement grid: dx=5mm, dy=5mm, dz=5mm
Reference Value = 23.46 V/m; Power Drift = -0.36 dB
Peak SAR (extrapolated) = 0.952 W/kg
SAR(1 g) = 0.583 W/kg; SAR(10 g) = 0.425 W/kg (SAR corrected for target medium)
Maximum value of SAR (measured) = 0.660 W/kg

Configuration Head for IC-F1100DT/Head Front, P=5W, d=25mm/Area Scan (61x101x1): Interpolated grid: dx=1.500 mm, dy=1.500 mm
Maximum value of SAR (interpolated) = 0.694 W/kg

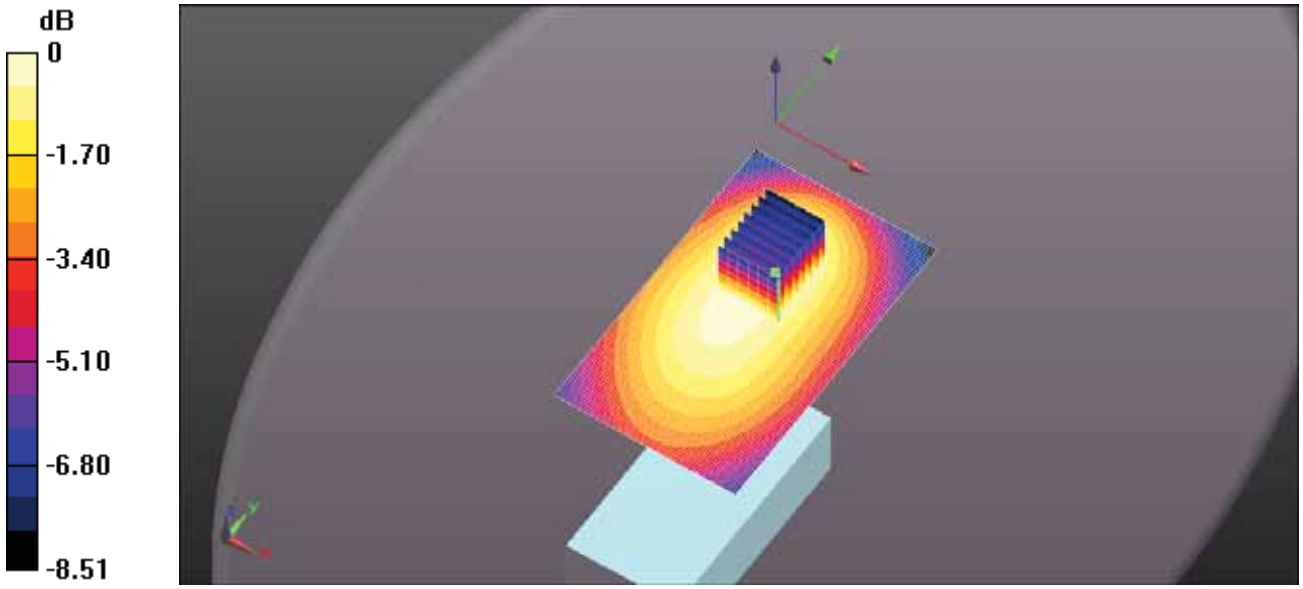

0 dB = 0.660 W/kg = -1.80 dBW/kg

Test Laboratory: Ultratech Group of Labs

FILE NAME: ICOM-489Q HEAD FA-SC27VS 150MHZ.DA52:0

DUT: IC-F1100DT; Type: VHF Receiver; Serial: 32000201-0

Communication System: UID 10000, CW; Frequency: 150 MHz; Duty Cycle: 1:1
Medium parameters used: f = 150 MHz; σ = 0.788 S/m; ε_r = 54.389; ρ = 1000 kg/m^3 ; Phantom section: Flat Section ; Measurement Standard: DASY5 (IEEE/IEC/ANSI C63.19-2011)

DASY Configuration:

- Probe: ES3DV3 - SN3250; ConvF(7.64, 7.64, 7.64); Calibrated: 3/13/2018;
- Sensor-Surface: 3mm (Mechanical Surface Detection)
- Electronics: DAE4 Sn874; Calibrated: 8/21/2017
- Phantom: ELI 4.0; Type: QD OVA 001 BB; Serial: 1057
- DASY52 52.10.0(1446); SEMCAD X 14.6.10(7417)

Configuration Head for IC-F1100DT/Head Front, P=5W, d=25mm/Zoom Scan (7x7x7) (7x8x7)/Cube 0: Measurement grid: dx=5mm, dy=5mm, dz=5mm
Reference Value = 24.50 V/m; Power Drift = -1.30 dB
Peak SAR (extrapolated) = 0.785 W/kg
SAR(1 g) = 0.486 W/kg; SAR(10 g) = 0.356 W/kg (SAR corrected for target medium)
Maximum value of SAR (measured) = 0.554 W/kg

Configuration Head for IC-F1100DT/Head Front, P=5W, d=25mm/Area Scan (61x101x1): Interpolated grid: dx=1.500 mm, dy=1.500 mm
Maximum value of SAR (interpolated) = 0.583 W/kg

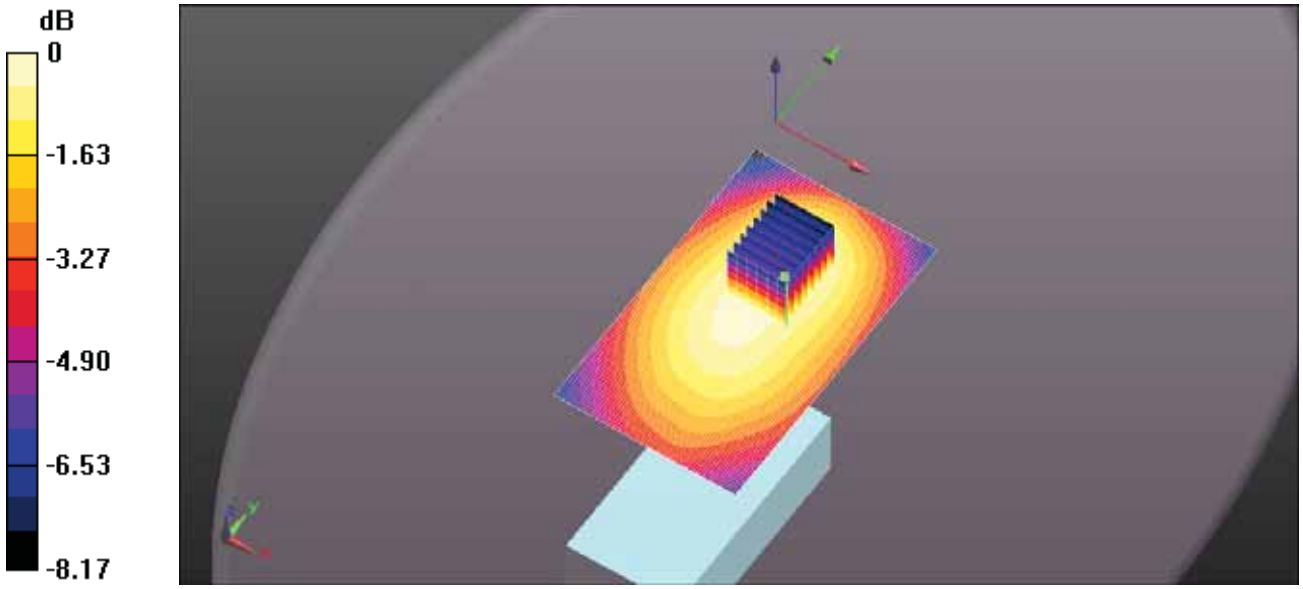

0 dB = 0.554 W/kg = -2.57 dBW/kg

Test Laboratory: Ultratech Group of Labs

FILE NAME: ICOM-489Q HEAD FA-SC56VS 150MHZ.DA52:0

DUT: IC-F1100DT; Type: VHF Receiver; Serial: 32000201-0

Communication System: UID 10000, CW; Frequency: 150 MHz; Duty Cycle: 1:1
Medium parameters used: f = 150 MHz; σ = 0.788 S/m; ε_r = 54.389; ρ = 1000 kg/m^3 ; Phantom section: Flat Section ; Measurement Standard: DASY5 (IEEE/IEC/ANSI C63.19-2011)

DASY Configuration:

- Probe: ES3DV3 - SN3250; ConvF(7.64, 7.64, 7.64); Calibrated: 3/13/2018;
- Sensor-Surface: 3mm (Mechanical Surface Detection)
- Electronics: DAE4 Sn874; Calibrated: 8/21/2017
- Phantom: ELI 4.0; Type: QD OVA 001 BB; Serial: 1057
- DASY52 52.10.0(1446); SEMCAD X 14.6.10(7417)

Configuration Head for IC-F1100DT/Head Front, P=5W, d=25mm/Zoom Scan (7x7x7) (7x9x7)/Cube 0: Measurement grid: dx=5mm, dy=5mm, dz=5mm
Reference Value = 21.61 V/m; Power Drift = -1.15 dB
Peak SAR (extrapolated) = 0.653 W/kg
SAR(1 g) = 0.407 W/kg; SAR(10 g) = 0.299 W/kg (SAR corrected for target medium)
Maximum value of SAR (measured) = 0.460 W/kg

Configuration Head for IC-F1100DT/Head Front, P=5W, d=25mm/Area Scan (61x101x1): Interpolated grid: dx=1.500 mm, dy=1.500 mm
Maximum value of SAR (interpolated) = 0.477 W/kg

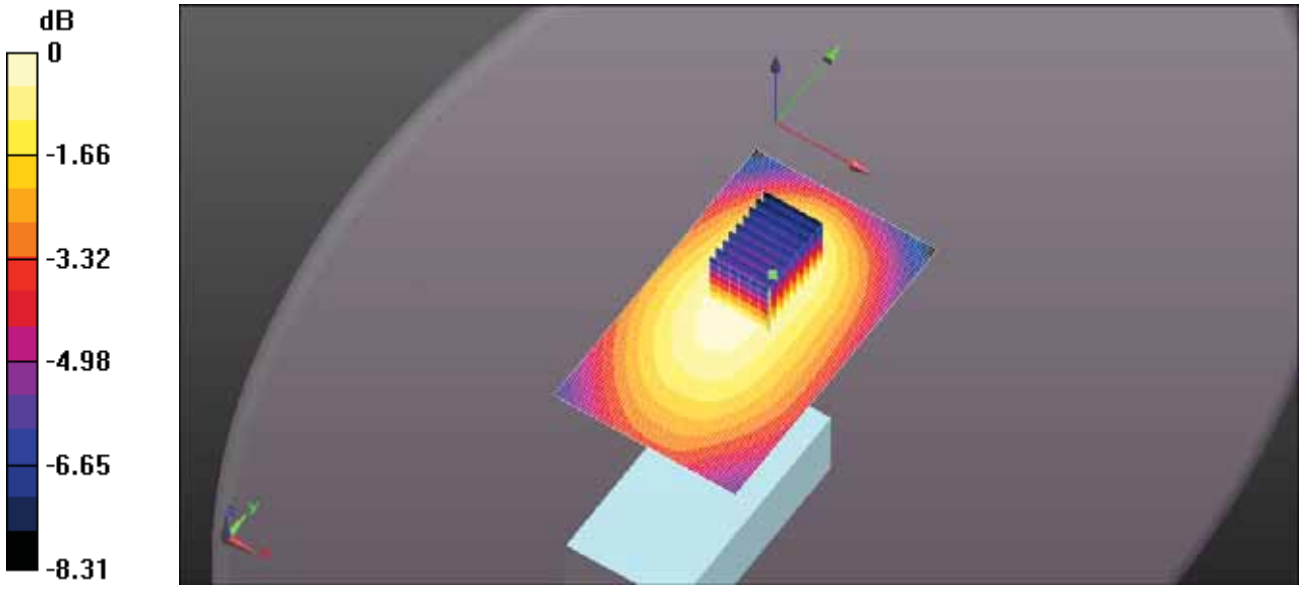

0 dB = 0.460 W/kg = -3.37 dBW/kg

Test Laboratory: Ultratech Group of Labs

FILE NAME: ICOM-489Q HEAD FA-SC56VS 156MHZ.DA52:0

DUT: IC-F1100DT; Type: VHF Receiver; Serial: 32000201-0

Communication System: UID 10000, CW; Frequency: 156 MHz; Duty Cycle: 1:1
Medium parameters used: f = 156 MHz; σ = 0.796 S/m; ε_r = 54.367; ρ = 1000 kg/m^3 ; Phantom section: Flat Section ; Measurement Standard: DASY5 (IEEE/IEC/ANSI C63.19-2011)

DASY Configuration:

- Probe: ES3DV3 - SN3250; ConvF(7.64, 7.64, 7.64); Calibrated: 3/13/2018;
- Sensor-Surface: 3mm (Mechanical Surface Detection)
- Electronics: DAE4 Sn874; Calibrated: 8/21/2017
- Phantom: ELI 4.0; Type: QD OVA 001 BB; Serial: 1057
- DASY52 52.10.0(1446); SEMCAD X 14.6.10(7417)

Configuration Head for IC-F1100DT/Head Front, P=5W, d=25mm/Zoom Scan (7x7x7) (7x8x7)/Cube 0: Measurement grid: dx=5mm, dy=5mm, dz=5mm
Reference Value = 12.75 V/m; Power Drift = -0.43 dB
Peak SAR (extrapolated) = 0.295 W/kg
SAR(1 g) = 0.182 W/kg; SAR(10 g) = 0.132 W/kg (SAR corrected for target medium)
Maximum value of SAR (measured) = 0.207 W/kg

Configuration Head for IC-F1100DT/Head Front, P=5W, d=25mm/Area Scan (61x101x1): Interpolated grid: dx=1.500 mm, dy=1.500 mm
Maximum value of SAR (interpolated) = 0.211 W/kg

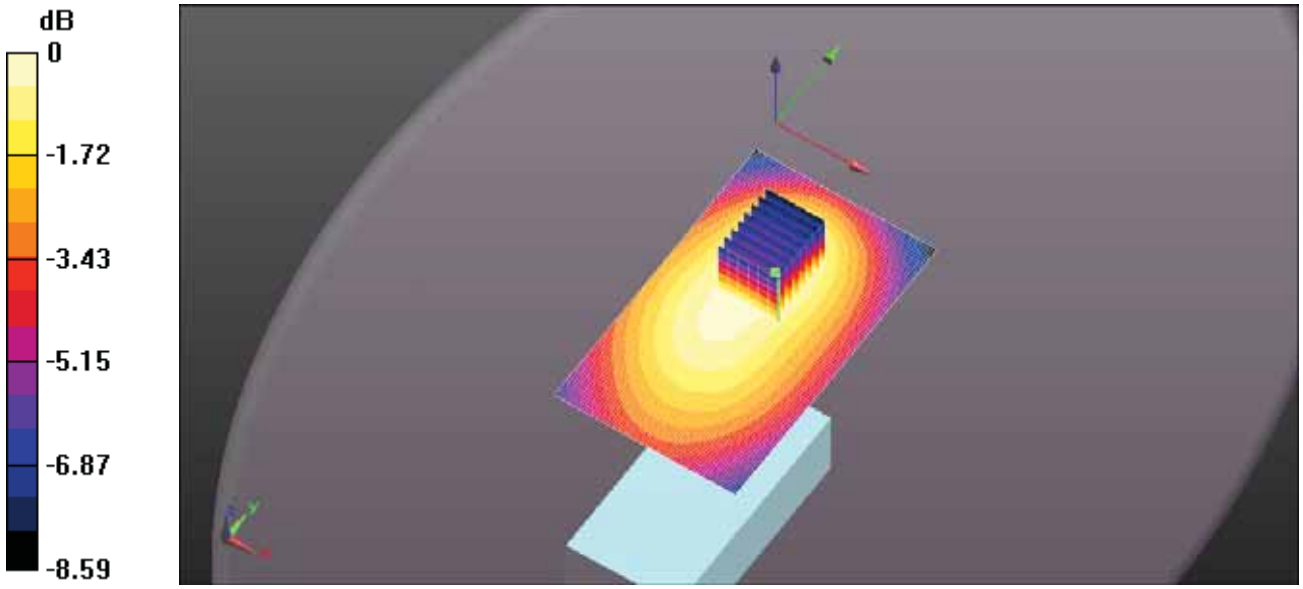

0 dB = 0.207 W/kg = -6.84 dBW/kg

Test Laboratory: Ultratech Group of Labs

FILE NAME: ICOM-489Q HEAD FA-SC56VS 162MHZ.DA52:0

DUT: IC-F1100DT; Type: VHF Receiver; Serial: 32000201-0

Communication System: UID 10000, CW; Frequency: 162 MHz; Duty Cycle: 1:1
Medium parameters used: f = 162 MHz; σ = 0.803 S/m; ε_r = 54.448; ρ = 1000 kg/m^3 ; Phantom section: Flat Section ; Measurement Standard: DASY5 (IEEE/IEC/ANSI C63.19-2011)

DASY Configuration:

- Probe: ES3DV3 - SN3250; ConvF(7.64, 7.64, 7.64); Calibrated: 3/13/2018;
- Sensor-Surface: 3mm (Mechanical Surface Detection)
- Electronics: DAE4 Sn874; Calibrated: 8/21/2017
- Phantom: ELI 4.0; Type: QD OVA 001 BB; Serial: 1057
- DASY52 52.10.0(1446); SEMCAD X 14.6.10(7417)

Configuration Head for IC-F1100DT/Head Front, P=5W, d=25mm/Zoom Scan (7x7x7) (7x8x7)/Cube 0: Measurement grid: dx=5mm, dy=5mm, dz=5mm
Reference Value = 9.831 V/m; Power Drift = -1.01 dB
Peak SAR (extrapolated) = 0.147 W/kg
SAR(1 g) = 0.092 W/kg; SAR(10 g) = 0.067 W/kg (SAR corrected for target medium)
Maximum value of SAR (measured) = 0.105 W/kg

Configuration Head for IC-F1100DT/Head Front, P=5W, d=25mm/Area Scan (61x101x1): Interpolated grid: dx=1.500 mm, dy=1.500 mm
Maximum value of SAR (interpolated) = 0.113 W/kg

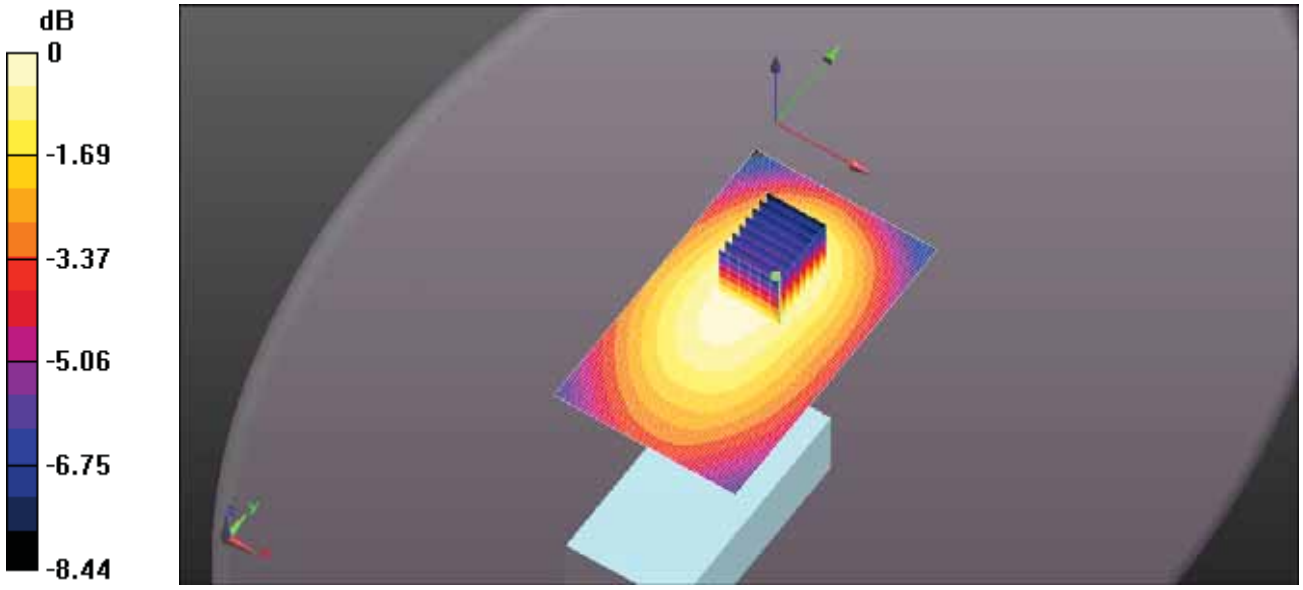

0 dB = 0.105 W/kg = -9.80 dBW/kg

Test Laboratory: Ultratech Group of Labs

FILE NAME: ICOM-489Q HEAD FA-SC57VS 160MHZ.DA52:0

DUT: IC-F1100DT; Type: VHF Receiver; Serial: 32000201-0

Communication System: UID 10000, CW; Frequency: 160 MHz; Duty Cycle: 1:1
Medium parameters used: f = 160 MHz; σ = 0.8 S/m; ε_r = 54.436; ρ = 1000 kg/m^3 ; Phantom section: Flat Section ; Measurement Standard: DASY5 (IEEE/IEC/ANSI C63.19-2011)

DASY Configuration:

- Probe: ES3DV3 - SN3250; ConvF(7.64, 7.64, 7.64); Calibrated: 3/13/2018;
- Sensor-Surface: 3mm (Mechanical Surface Detection)
- Electronics: DAE4 Sn874; Calibrated: 8/21/2017
- Phantom: ELI 4.0; Type: QD OVA 001 BB; Serial: 1057
- DASY52 52.10.0(1446); SEMCAD X 14.6.10(7417)

Configuration Head for IC-F1100DT/Head Front, P=5W, d=25mm/Zoom Scan (7x7x7) (7x10x7)/Cube 0: Measurement grid: dx=5mm, dy=5mm, dz=5mm
Reference Value = 28.05 V/m; Power Drift = 0.09 dB
Peak SAR (extrapolated) = 1.27 W/kg
SAR(1 g) = 0.819 W/kg; SAR(10 g) = 0.609 W/kg (SAR corrected for target medium)
Maximum value of SAR (measured) = 0.921 W/kg

Configuration Head for IC-F1100DT/Head Front, P=5W, d=25mm/Area Scan (61x101x1): Interpolated grid: dx=1.500 mm, dy=1.500 mm
Maximum value of SAR (interpolated) = 0.915 W/kg

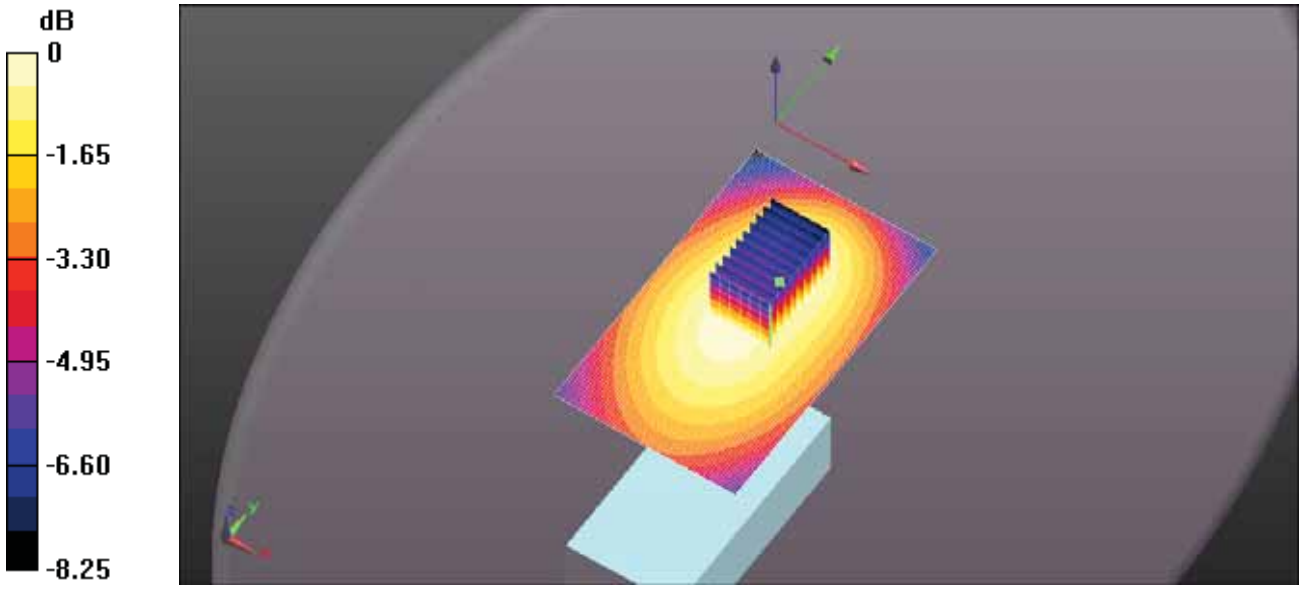

0 dB = 0.921 W/kg = -0.36 dBW/kg

Test Laboratory: Ultratech Group of Labs

FILE NAME: ICOM-489Q HEAD FA-SC57VS 167MHZ.DA52:0

DUT: IC-F1100DT; Type: VHF Receiver; Serial: 32000201-0

Communication System: UID 10000, CW; Frequency: 167 MHz; Duty Cycle: 1:1
Medium parameters used (interpolated): f = 167 MHz; σ = 0.809 S/m; ε_r = 54.382; ρ = 1000 kg/m^3 ;
Phantom section: Flat Section ; Measurement Standard: DASY5 (IEEE/IEC/ANSI C63.19-2011)

DASY Configuration:

- Probe: ES3DV3 - SN3250; ConvF(7.64, 7.64, 7.64); Calibrated: 3/13/2018;
- Sensor-Surface: 3mm (Mechanical Surface Detection)
- Electronics: DAE4 Sn874; Calibrated: 8/21/2017
- Phantom: ELI 4.0; Type: QD OVA 001 BB; Serial: 1057
- DASY52 52.10.0(1446); SEMCAD X 14.6.10(7417)

Configuration Head for IC-F1100DT/Head Front, P=5W, d=25mm/Zoom Scan (7x7x7) (7x10x7)/Cube 0: Measurement grid: dx=5mm, dy=5mm, dz=5mm
Reference Value = 25.83 V/m; Power Drift = -1.10 dB
Peak SAR (extrapolated) = 0.835 W/kg
SAR(1 g) = 0.546 W/kg; SAR(10 g) = 0.407 W/kg (SAR corrected for target medium)
Maximum value of SAR (measured) = 0.612 W/kg
Configuration Head for IC-F1100DT/Head Front, P=5W, d=25mm/Area Scan (61x101x1): Interpolated grid: dx=1.500 mm, dy=1.500 mm
Maximum value of SAR (interpolated) = 0.644 W/kg

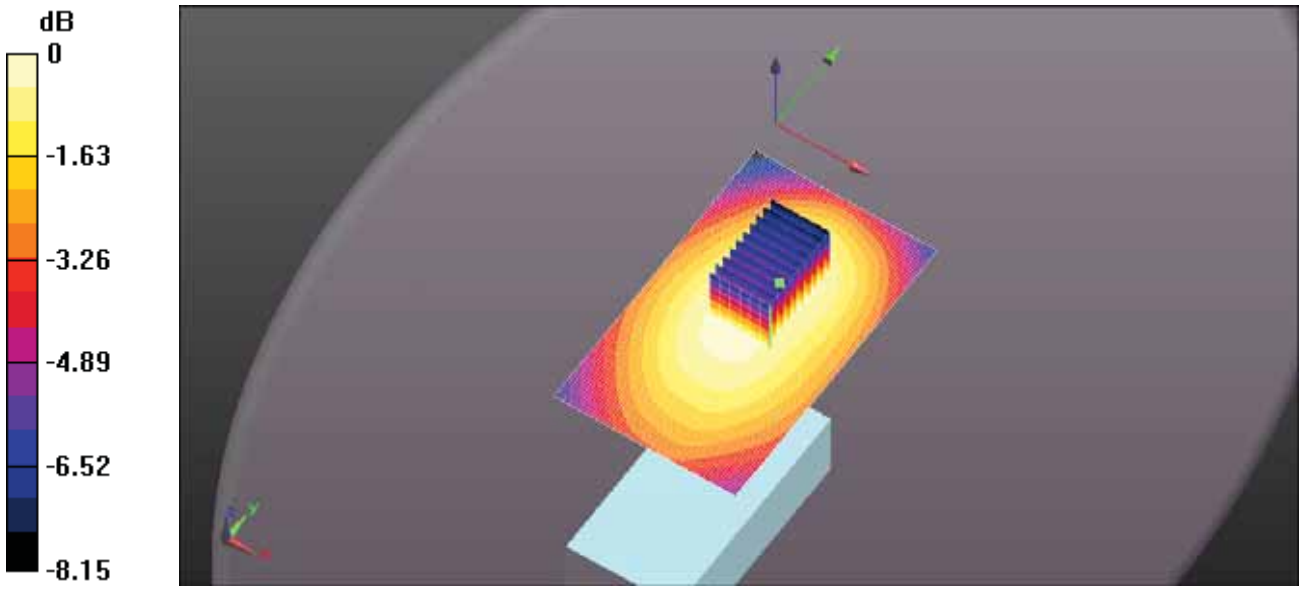

0 dB = 0.612 W/kg = -2.13 dBW/kg

Test Laboratory: Ultratech Group of Labs

FILE NAME: ICOM-489Q HEAD FA-SC57VS 174MHZ.DA52:0

DUT: IC-F1100DT; Type: VHF Receiver; Serial: 32000201-0

Communication System: UID 10000, CW; Frequency: 174 MHz; Duty Cycle: 1:1
Medium parameters used: f = 174 MHz; σ = 0.818 S/m; ε_r = 54.228; ρ = 1000 kg/m^3 ; Phantom section: Flat Section ; Measurement Standard: DASY5 (IEEE/IEC/ANSI C63.19-2011)

DASY Configuration:

- Probe: ES3DV3 - SN3250; ConvF(7.64, 7.64, 7.64); Calibrated: 3/13/2018;
- Sensor-Surface: 3mm (Mechanical Surface Detection)
- Electronics: DAE4 Sn874; Calibrated: 8/21/2017
- Phantom: ELI 4.0; Type: QD OVA 001 BB; Serial: 1057
- DASY52 52.10.0(1446); SEMCAD X 14.6.10(7417)

Configuration Head for IC-F1100DT/Head Front, P=5W, d=25mm/Zoom Scan (7x7x7) (9x13x7)/Cube 0: Measurement grid: dx=5mm, dy=5mm, dz=5mm
Reference Value = 10.10 V/m; Power Drift = -1.99 dB
Peak SAR (extrapolated) = 0.330 W/kg
SAR(1 g) = 0.195 W/kg; SAR(10 g) = 0.132 W/kg (SAR corrected for target medium)
Maximum value of SAR (measured) = 0.222 W/kg

Configuration Head for IC-F1100DT/Head Front, P=5W, d=25mm/Area Scan (61x101x1): Interpolated grid: dx=1.500 mm, dy=1.500 mm
Maximum value of SAR (interpolated) = 0.132 W/kg

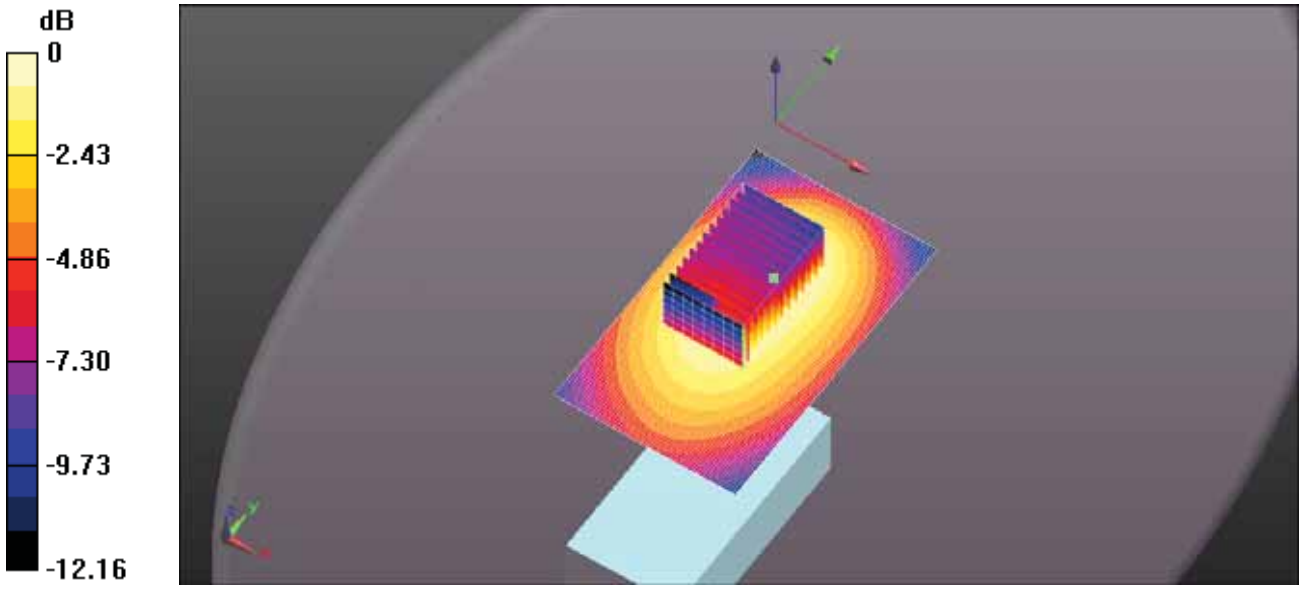

0 dB = 0.222 W/kg = -6.54 dBW/kg

Test Laboratory: Ultratech Group of Labs

FILE NAME: ICOM-489Q HEAD FA-SC61VC 174MM 136MHZ.DA52:0

DUT: IC-F1100DT; Type: VHF Receiver; Serial: 32000201-0

Communication System: UID 10000, CW; Frequency: 136 MHz; Duty Cycle: 1:1
Medium parameters used: f = 136 MHz; σ = 0.773 S/m; ε_r = 54.298; ρ = 1000 kg/m^3 ; Phantom section: Flat Section ; Measurement Standard: DASY5 (IEEE/IEC/ANSI C63.19-2011)

DASY Configuration:

- Probe: ES3DV3 - SN3250; ConvF(7.64, 7.64, 7.64); Calibrated: 3/13/2018;
- Sensor-Surface: 3mm (Mechanical Surface Detection)
- Electronics: DAE4 Sn874; Calibrated: 8/21/2017
- Phantom: ELI 4.0; Type: QD OVA 001 BB; Serial: 1057
- DASY52 52.10.0(1446); SEMCAD X 14.6.10(7417)

Configuration Head for IC-F1100DT/Head Front, P=5W, d=25mm/Zoom Scan (7x7x7) (7x7x7)/Cube 0: Measurement grid: dx=5mm, dy=5mm, dz=5mm
Reference Value = 35.07 V/m; Power Drift = -0.54 dB
Peak SAR (extrapolated) = 1.58 W/kg
SAR(1 g) = 1.11 W/kg; SAR(10 g) = 0.852 W/kg (SAR corrected for target medium)
Maximum value of SAR (measured) = 1.23 W/kg

Configuration Head for IC-F1100DT/Head Front, P=5W, d=25mm/Area Scan (61x101x1): Interpolated grid: dx=1.500 mm, dy=1.500 mm
Maximum value of SAR (interpolated) = 1.27 W/kg

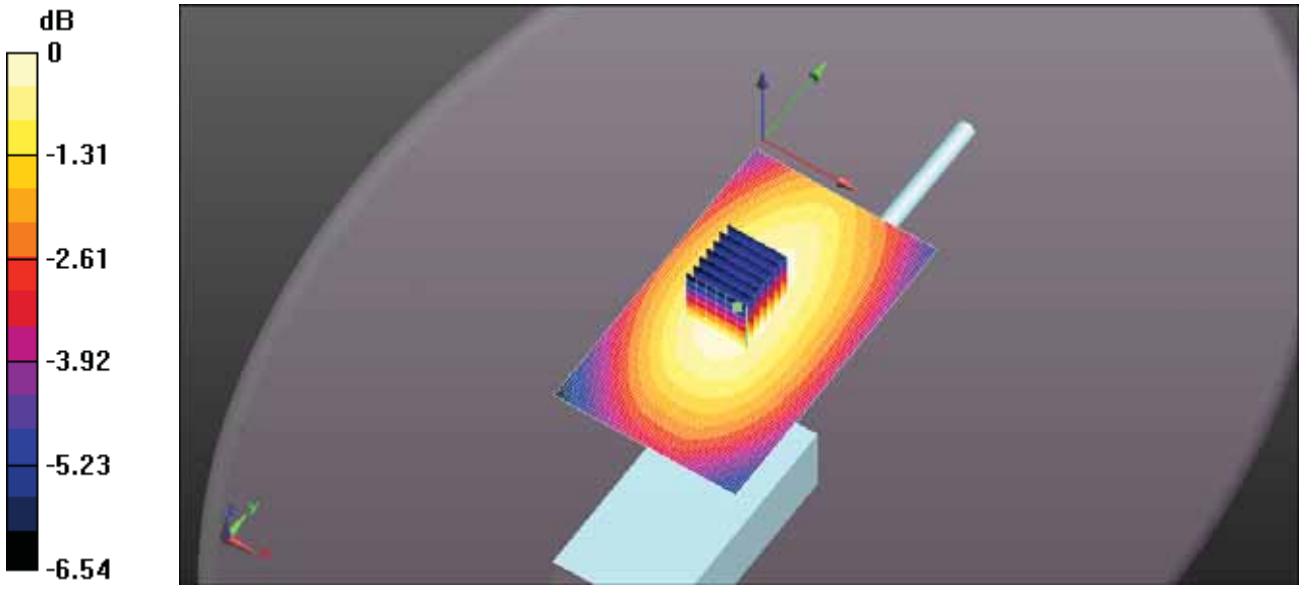

0 dB = 1.23 W/kg = 0.92 dBW/kg

Test Laboratory: Ultratech Group of Labs

FILE NAME: ICOM-489Q HEAD FA-SC61VC 174MM 142.3MHZ.DA52:0

DUT: IC-F1100DT; Type: VHF Receiver; Serial: 32000201-0

Communication System: UID 10000, CW; Frequency: 142.3 MHz; Duty Cycle: 1:1
Medium parameters used (interpolated): f = 142.3 MHz; σ = 0.78 S/m; ε_r = 54.488; ρ = 1000 kg/m^3 ;
Phantom section: Flat Section ; Measurement Standard: DASY5 (IEEE/IEC/ANSI C63.19-2011)

DASY Configuration:

- Probe: ES3DV3 - SN3250; ConvF(7.64, 7.64, 7.64); Calibrated: 3/13/2018;
- Sensor-Surface: 3mm (Mechanical Surface Detection)
- Electronics: DAE4 Sn874; Calibrated: 8/21/2017
- Phantom: ELI 4.0; Type: QD OVA 001 BB; Serial: 1057
- DASY52 52.10.0(1446); SEMCAD X 14.6.10(7417)

Configuration Head for IC-F1100DT/Head Front, P=5W, d=25mm/Zoom Scan (7x7x7) (7x7x7)/Cube 0: Measurement grid: dx=5mm, dy=5mm, dz=5mm
Reference Value = 39.74 V/m; Power Drift = -1.17 dB
Peak SAR (extrapolated) = 1.78 W/kg
SAR(1 g) = 1.26 W/kg; SAR(10 g) = 0.962 W/kg (SAR corrected for target medium)
Maximum value of SAR (measured) = 1.39 W/kg
Configuration Head for IC-F1100DT/Head Front, P=5W, d=25mm/Area Scan (61x101x1): Interpolated grid: dx=1.500 mm, dy=1.500 mm
Maximum value of SAR (interpolated) = 1.52 W/kg

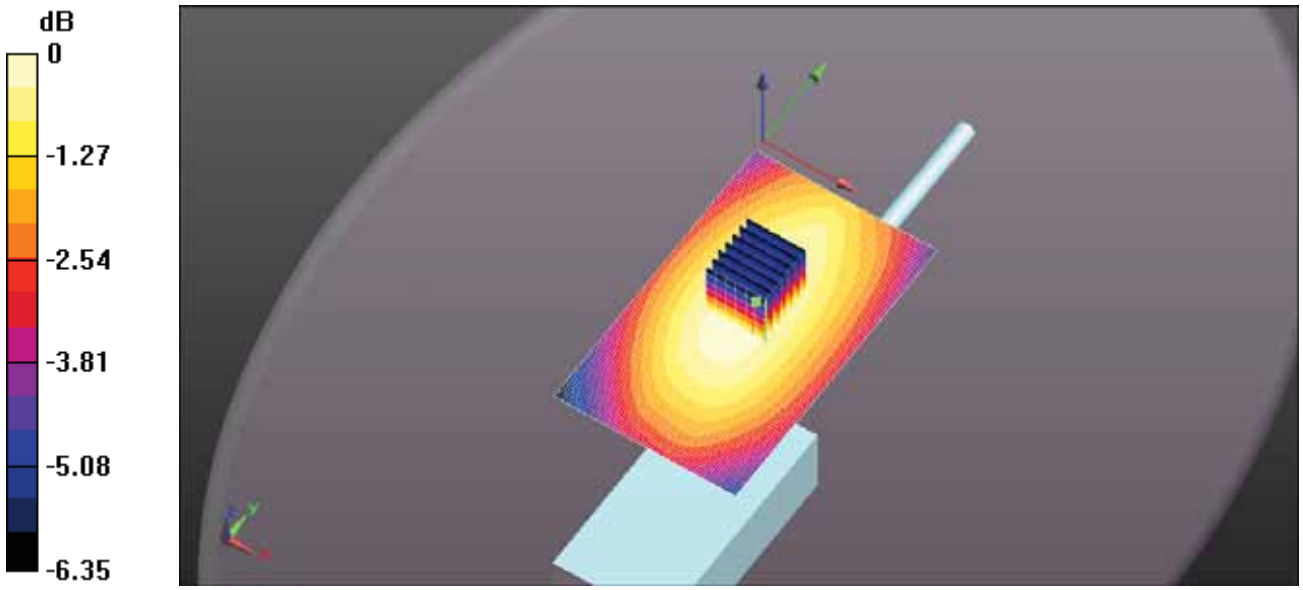

0 dB = 1.39 W/kg = 1.44 dBW/kg

Test Laboratory: Ultratech Group of Labs

FILE NAME: ICOM-489Q HEAD FA-SC61VC 174MM 148.7MHZ.DA52:0

DUT: IC-F1100DT; Type: VHF Receiver; Serial: 32000201-0

Communication System: UID 10000, CW; Frequency: 148.7 MHz; Duty Cycle: 1:1
Medium parameters used (interpolated): f = 148.7 MHz; σ = 0.787 S/m; ε_r = 54.353; ρ = 1000 kg/m^3 ;
Phantom section: Flat Section ; Measurement Standard: DASY5 (IEEE/IEC/ANSI C63.19-2011)

DASY Configuration:

- Probe: ES3DV3 - SN3250; ConvF(7.64, 7.64, 7.64); Calibrated: 3/13/2018;
- Sensor-Surface: 3mm (Mechanical Surface Detection)
- Electronics: DAE4 Sn874; Calibrated: 8/21/2017
- Phantom: ELI 4.0; Type: QD OVA 001 BB; Serial: 1057
- DASY52 52.10.0(1446); SEMCAD X 14.6.10(7417)

Configuration Head for IC-F1100DT/Head Front, P=5W, d=25mm/Zoom Scan (7x7x7) (7x7x7)/Cube 0: Measurement grid: dx=5mm, dy=5mm, dz=5mm
Reference Value = 31.40 V/m; Power Drift = -0.42 dB
Peak SAR (extrapolated) = 1.34 W/kg
SAR(1 g) = 0.945 W/kg; SAR(10 g) = 0.720 W/kg (SAR corrected for target medium)
Maximum value of SAR (measured) = 1.05 W/kg
Configuration Head for IC-F1100DT/Head Front, P=5W, d=25mm/Area Scan (61x101x1): Interpolated grid: dx=1.500 mm, dy=1.500 mm
Maximum value of SAR (interpolated) = 1.08 W/kg

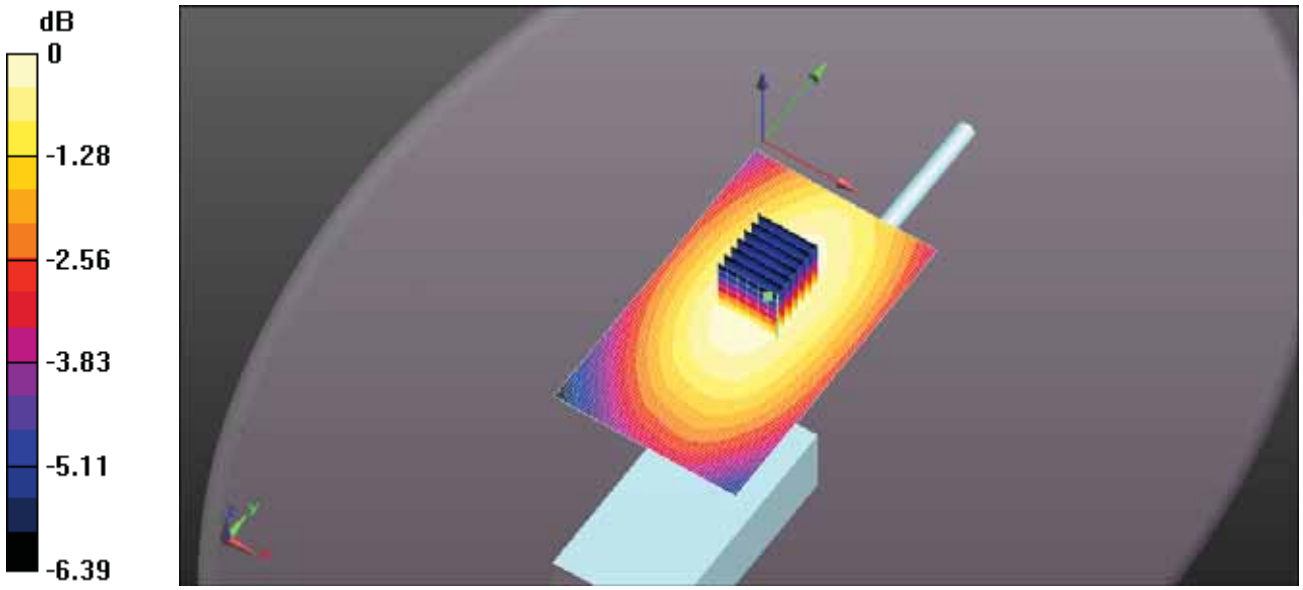

0 dB = 1.05 W/kg = 0.20 dBW/kg

Test Laboratory: Ultratech Group of Labs

FILE NAME: ICOM-489Q HEAD FA-SC61VC 174MM 155MHZ.DA52:0

DUT: IC-F1100DT; Type: VHF Receiver; Serial: 32000201-0

Communication System: UID 10000, CW; Frequency: 155 MHz; Duty Cycle: 1:1
Medium parameters used (interpolated): f = 155 MHz; σ = 0.795 S/m; ε_r = 54.309; ρ = 1000 kg/m^3 ;
Phantom section: Flat Section ; Measurement Standard: DASY5 (IEEE/IEC/ANSI C63.19-2011)

DASY Configuration:

- Probe: ES3DV3 - SN3250; ConvF(7.64, 7.64, 7.64); Calibrated: 3/13/2018;
- Sensor-Surface: 3mm (Mechanical Surface Detection)
- Electronics: DAE4 Sn874; Calibrated: 8/21/2017
- Phantom: ELI 4.0; Type: QD OVA 001 BB; Serial: 1057
- DASY52 52.10.0(1446); SEMCAD X 14.6.10(7417)

Configuration Head for IC-F1100DT/Head Front, P=5W, d=25mm/Zoom Scan (7x7x7) (7x7x7)/Cube 0: Measurement grid: dx=5mm, dy=5mm, dz=5mm
Reference Value = 20.10 V/m; Power Drift = -0.27 dB
Peak SAR (extrapolated) = 0.621 W/kg
SAR(1 g) = 0.438 W/kg; SAR(10 g) = 0.334 W/kg (SAR corrected for target medium)
Maximum value of SAR (measured) = 0.487 W/kg
Configuration Head for IC-F1100DT/Head Front, P=5W, d=25mm/Area Scan (61x101x1): Interpolated grid: dx=1.500 mm, dy=1.500 mm
Maximum value of SAR (interpolated) = 0.494 W/kg

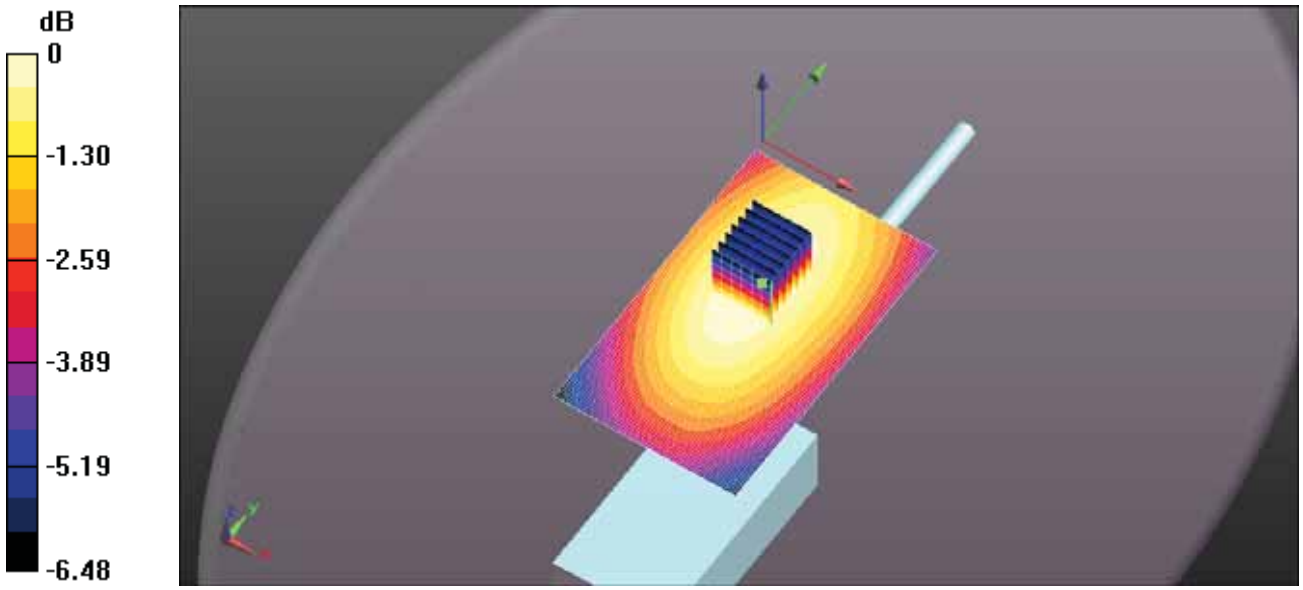

0 dB = 0.487 W/kg = -3.12 dBW/kg

Test Laboratory: Ultratech Group of Labs

FILE NAME: ICOM-489Q HEAD FA-SC61VC 174MM 161.3MHZ.DA52:0

DUT: IC-F1100DT; Type: VHF Receiver; Serial: 32000201-0

Communication System: UID 10000, CW; Frequency: 161.3 MHz; Duty Cycle: 1:1
Medium parameters used: f = 162 MHz; σ = 0.803 S/m; ε_r = 54.448; ρ = 1000 kg/m^3 ; Phantom section: Flat Section ; Measurement Standard: DASY5 (IEEE/IEC/ANSI C63.19-2011)

DASY Configuration:

- Probe: ES3DV3 - SN3250; ConvF(7.64, 7.64, 7.64); Calibrated: 3/13/2018;
- Sensor-Surface: 3mm (Mechanical Surface Detection)
- Electronics: DAE4 Sn874; Calibrated: 8/21/2017
- Phantom: ELI 4.0; Type: QD OVA 001 BB; Serial: 1057
- DASY52 52.10.0(1446); SEMCAD X 14.6.10(7417)

Configuration Head for IC-F1100DT/Head Front, P=5W, d=25mm/Zoom Scan (7x7x7) (7x7x7)/Cube 0: Measurement grid: dx=5mm, dy=5mm, dz=5mm
Reference Value = 16.82 V/m; Power Drift = -0.50 dB
Peak SAR (extrapolated) = 0.428 W/kg
SAR(1 g) = 0.301 W/kg; SAR(10 g) = 0.228 W/kg (SAR corrected for target medium)
Maximum value of SAR (measured) = 0.335 W/kg

Configuration Head for IC-F1100DT/Head Front, P=5W, d=25mm/Area Scan (61x101x1): Interpolated grid: dx=1.500 mm, dy=1.500 mm
Maximum value of SAR (interpolated) = 0.348 W/kg

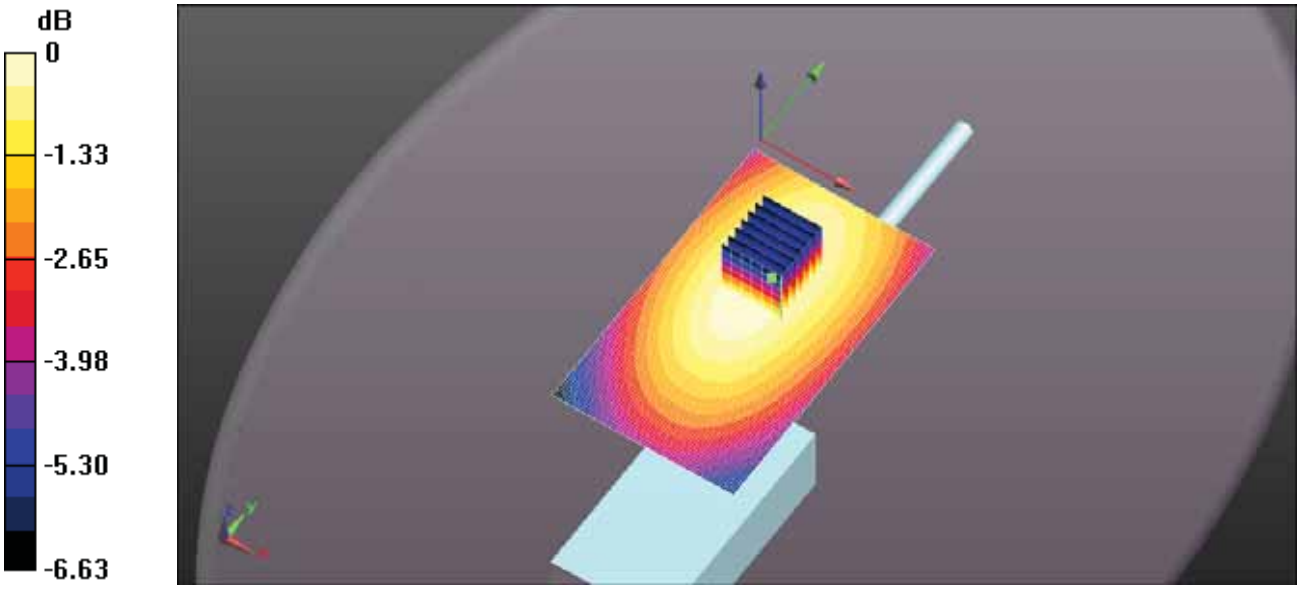

0 dB = 0.335 W/kg = -4.75 dBW/kg

Test Laboratory: Ultratech Group of Labs

FILE NAME: ICOM-489Q HEAD FA-SC61VC 174MM 167.7MHZ.DA52:0

DUT: IC-F1100DT; Type: VHF Receiver; Serial: 32000201-0

Communication System: UID 10000, CW; Frequency: 167.7 MHz; Duty Cycle: 1:1
Medium parameters used: f = 168 MHz; σ = 0.81 S/m; ε_r = 54.329; ρ = 1000 kg/m^3 ; Phantom section: Flat Section ; Measurement Standard: DASY5 (IEEE/IEC/ANSI C63.19-2011)

DASY Configuration:

- Probe: ES3DV3 - SN3250; ConvF(7.64, 7.64, 7.64); Calibrated: 3/13/2018;
- Sensor-Surface: 3mm (Mechanical Surface Detection)
- Electronics: DAE4 Sn874; Calibrated: 8/21/2017
- Phantom: ELI 4.0; Type: QD OVA 001 BB; Serial: 1057
- DASY52 52.10.0(1446); SEMCAD X 14.6.10(7417)

Configuration Head for IC-F1100DT/Head Front, P=5W, d=25mm/Zoom Scan (7x7x7) (8x7x7)/Cube 0: Measurement grid: dx=5mm, dy=5mm, dz=5mm
Reference Value = 10.14 V/m; Power Drift = 0.53 dB
Peak SAR (extrapolated) = 0.215 W/kg
SAR(1 g) = 0.150 W/kg; SAR(10 g) = 0.114 W/kg (SAR corrected for target medium)
Maximum value of SAR (measured) = 0.167 W/kg

Configuration Head for IC-F1100DT/Head Front, P=5W, d=25mm/Area Scan (61x101x1): Interpolated grid: dx=1.500 mm, dy=1.500 mm
Maximum value of SAR (interpolated) = 0.150 W/kg

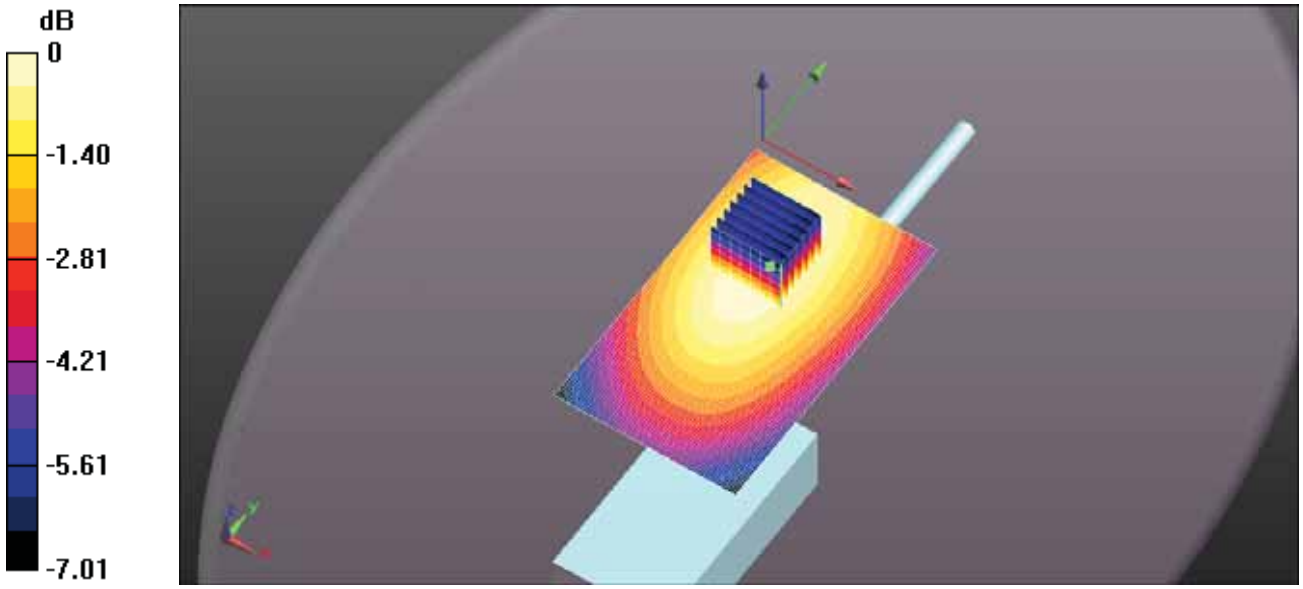

0 dB = 0.167 W/kg = -7.77 dBW/kg

Test Laboratory: Ultratech Group of Labs

FILE NAME: ICOM-489Q HEAD FA-SC61VC 174MM 174MHZ.DA52:0

DUT: IC-F1100DT; Type: VHF Receiver; Serial: 32000201-0

Communication System: UID 10000, CW; Frequency: 174 MHz; Duty Cycle: 1:1
Medium parameters used: f = 174 MHz; σ = 0.818 S/m; ε_r = 54.228; ρ = 1000 kg/m^3 ; Phantom section: Flat Section ; Measurement Standard: DASY5 (IEEE/IEC/ANSI C63.19-2011)

DASY Configuration:

- Probe: ES3DV3 - SN3250; ConvF(7.64, 7.64, 7.64); Calibrated: 3/13/2018;
- Sensor-Surface: 3mm (Mechanical Surface Detection)
- Electronics: DAE4 Sn874; Calibrated: 8/21/2017
- Phantom: ELI 4.0; Type: QD OVA 001 BB; Serial: 1057
- DASY52 52.10.0(1446); SEMCAD X 14.6.10(7417)

Configuration Head for IC-F1100DT/Head Front, P=5W, d=25mm/Zoom Scan (7x7x7) (11x7x7)/Cube 0: Measurement grid: dx=5mm, dy=5mm, dz=5mm
Reference Value = 7.300 V/m; Power Drift = -1.93 dB
Peak SAR (extrapolated) = 0.245 W/kg
SAR(1 g) = 0.113 W/kg; SAR(10 g) = 0.083 W/kg (SAR corrected for target medium)
Maximum value of SAR (measured) = 0.127 W/kg

Configuration Head for IC-F1100DT/Head Front, P=5W, d=25mm/Area Scan (61x101x1): Interpolated grid: dx=1.500 mm, dy=1.500 mm
Maximum value of SAR (interpolated) = 0.0834 W/kg

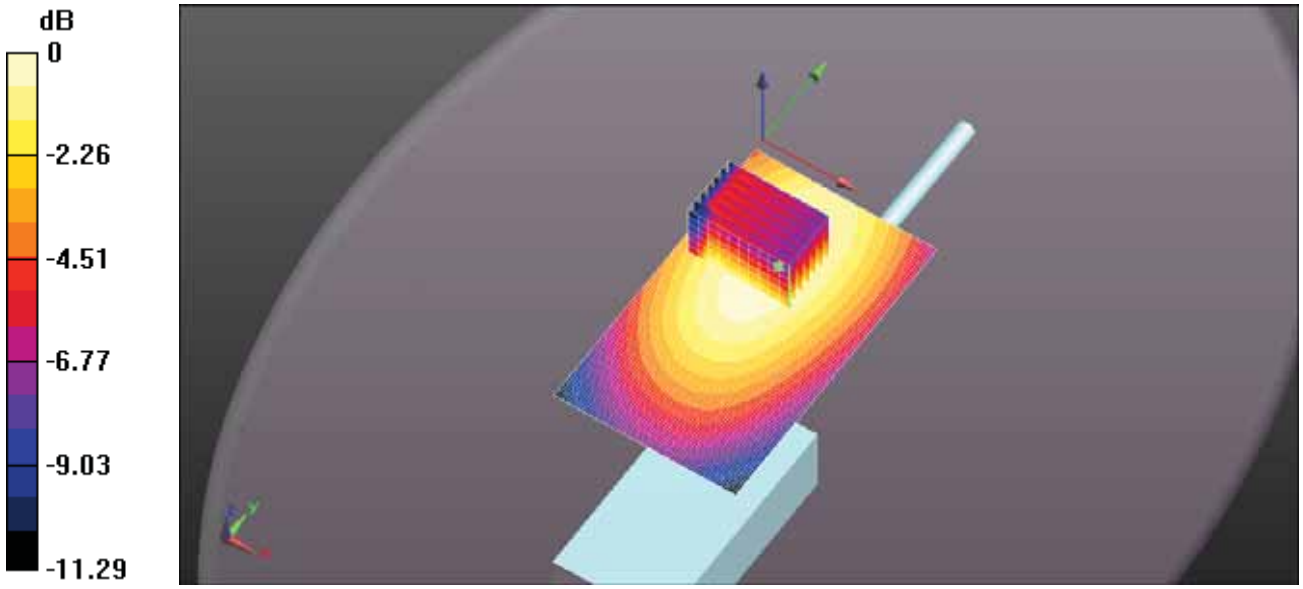

0 dB = 0.127 W/kg = -8.97 dBW/kg

Test Laboratory: Ultratech Group of Labs

FILE NAME: ICOM-489Q HEAD FA-SC61VC 169MM 136MHZ.DA52:0

DUT: IC-F1100DT; Type: VHF Receiver; Serial: 32000201-0

Communication System: UID 10000, CW; Frequency: 136 MHz; Duty Cycle: 1:1
Medium parameters used: f = 136 MHz; σ = 0.773 S/m; ε_r = 54.298; ρ = 1000 kg/m^3 ; Phantom section: Flat Section ; Measurement Standard: DASY5 (IEEE/IEC/ANSI C63.19-2011)

DASY Configuration:

- Probe: ES3DV3 - SN3250; ConvF(7.64, 7.64, 7.64); Calibrated: 3/13/2018;
- Sensor-Surface: 3mm (Mechanical Surface Detection)
- Electronics: DAE4 Sn874; Calibrated: 8/21/2017
- Phantom: ELI 4.0; Type: QD OVA 001 BB; Serial: 1057
- DASY52 52.10.0(1446); SEMCAD X 14.6.10(7417)

Configuration Head for IC-F1100DT/Head Front, P=5W, d=25mm/Zoom Scan (7x7x7) (7x7x7)/Cube 0: Measurement grid: dx=5mm, dy=5mm, dz=5mm
Reference Value = 32.28 V/m; Power Drift = -0.48 dB
Peak SAR (extrapolated) = 1.32 W/kg
SAR(1 g) = 0.929 W/kg; SAR(10 g) = 0.709 W/kg (SAR corrected for target medium)
Maximum value of SAR (measured) = 1.03 W/kg

Configuration Head for IC-F1100DT/Head Front, P=5W, d=25mm/Area Scan (61x101x1): Interpolated grid: dx=1.500 mm, dy=1.500 mm
Maximum value of SAR (interpolated) = 1.05 W/kg

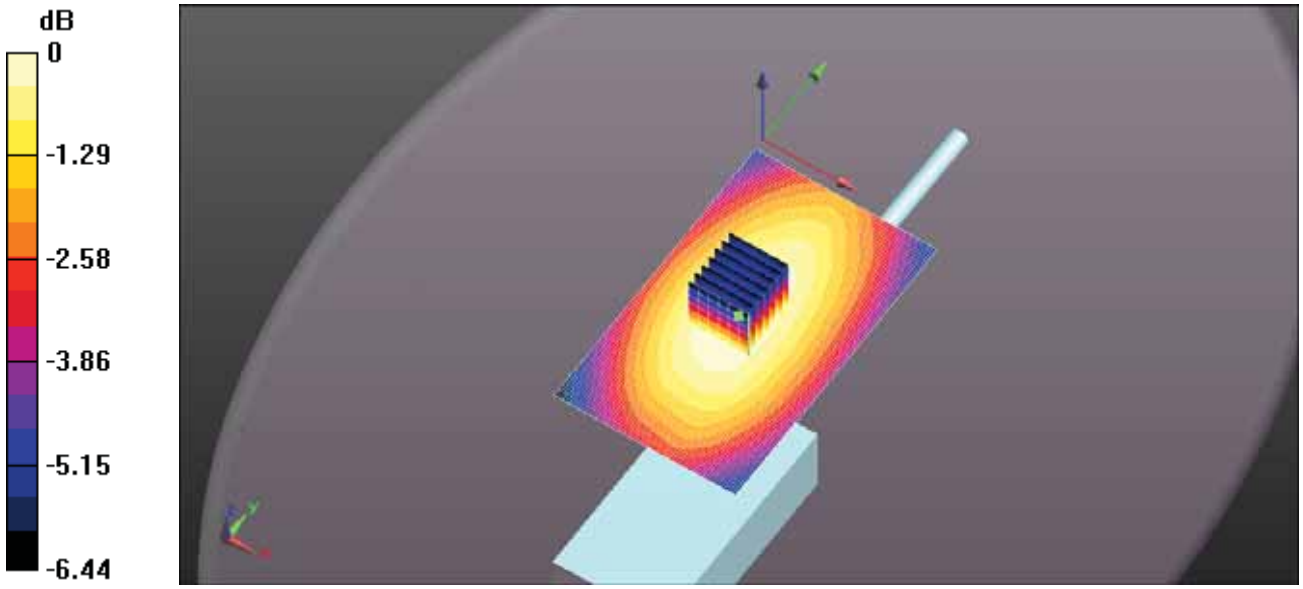

0 dB = 1.03 W/kg = 0.13 dBW/kg

Test Laboratory: Ultratech Group of Labs

FILE NAME: ICOM-489Q HEAD FA-SC61VC 169MM 142.3MHZ.DA52:0

DUT: IC-F1100DT; Type: VHF Receiver; Serial: 32000201-0

Communication System: UID 10000, CW; Frequency: 142.3 MHz; Duty Cycle: 1:1
Medium parameters used (interpolated): f = 142.3 MHz; σ = 0.78 S/m; ε_r = 54.488; ρ = 1000 kg/m^3 ;
Phantom section: Flat Section ; Measurement Standard: DASY5 (IEEE/IEC/ANSI C63.19-2011)

DASY Configuration:

- Probe: ES3DV3 - SN3250; ConvF(7.64, 7.64, 7.64); Calibrated: 3/13/2018;
- Sensor-Surface: 3mm (Mechanical Surface Detection)
- Electronics: DAE4 Sn874; Calibrated: 8/21/2017
- Phantom: ELI 4.0; Type: QD OVA 001 BB; Serial: 1057
- DASY52 52.10.0(1446); SEMCAD X 14.6.10(7417)

Configuration Head for IC-F1100DT/Head Front, P=5W, d=25mm/Zoom Scan (7x7x7) (7x7x7)/Cube 0: Measurement grid: dx=5mm, dy=5mm, dz=5mm
Reference Value = 39.28 V/m; Power Drift = -0.80 dB
Peak SAR (extrapolated) = 1.87 W/kg
SAR(1 g) = 1.32 W/kg; SAR(10 g) = 1.01 W/kg (SAR corrected for target medium)
Maximum value of SAR (measured) = 1.47 W/kg
Configuration Head for IC-F1100DT/Head Front, P=5W, d=25mm/Area Scan (61x101x1): Interpolated grid: dx=1.500 mm, dy=1.500 mm
Maximum value of SAR (interpolated) = 1.52 W/kg

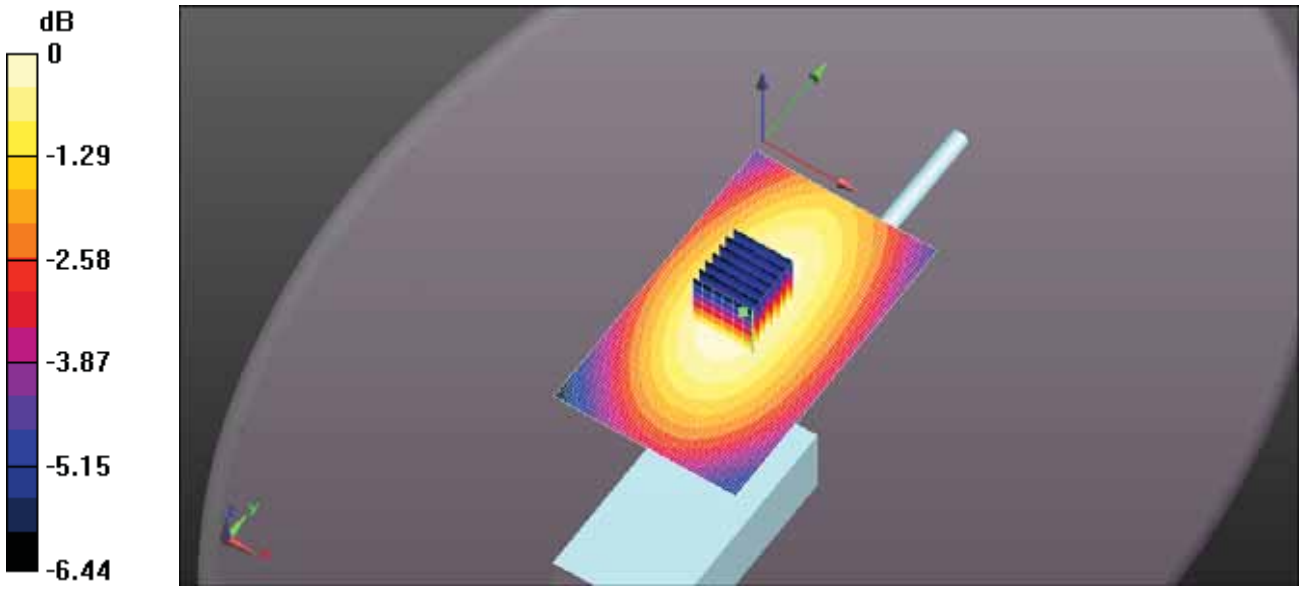

0 dB = 1.47 W/kg = 1.67 dBW/kg

Test Laboratory: Ultratech Group of Labs

FILE NAME: ICOM-489Q HEAD FA-SC61VC 169MM 148.7MHZ.DA52:0

DUT: IC-F1100DT; Type: VHF Receiver; Serial: 32000201-0

Communication System: UID 10000, CW; Frequency: 148.7 MHz; Duty Cycle: 1:1
Medium parameters used (interpolated): f = 148.7 MHz; σ = 0.787 S/m; ε_r = 54.353; ρ = 1000 kg/m^3 ;
Phantom section: Flat Section ; Measurement Standard: DASY5 (IEEE/IEC/ANSI C63.19-2011)

DASY Configuration:

- Probe: ES3DV3 - SN3250; ConvF(7.64, 7.64, 7.64); Calibrated: 3/13/2018;
- Sensor-Surface: 3mm (Mechanical Surface Detection)
- Electronics: DAE4 Sn874; Calibrated: 8/21/2017
- Phantom: ELI 4.0; Type: QD OVA 001 BB; Serial: 1057
- DASY52 52.10.0(1446); SEMCAD X 14.6.10(7417)

Configuration Head for IC-F1100DT/Head Front, P=5W, d=25mm/Zoom Scan (7x7x7) (7x8x7)/Cube 0: Measurement grid: dx=5mm, dy=5mm, dz=5mm
Reference Value = 31.61 V/m; Power Drift = -0.18 dB
Peak SAR (extrapolated) = 1.47 W/kg
SAR(1 g) = 1.04 W/kg; SAR(10 g) = 0.797 W/kg (SAR corrected for target medium)
Maximum value of SAR (measured) = 1.15 W/kg
Configuration Head for IC-F1100DT/Head Front, P=5W, d=25mm/Area Scan (61x101x1): Interpolated grid: dx=1.500 mm, dy=1.500 mm
Maximum value of SAR (interpolated) = 1.18 W/kg

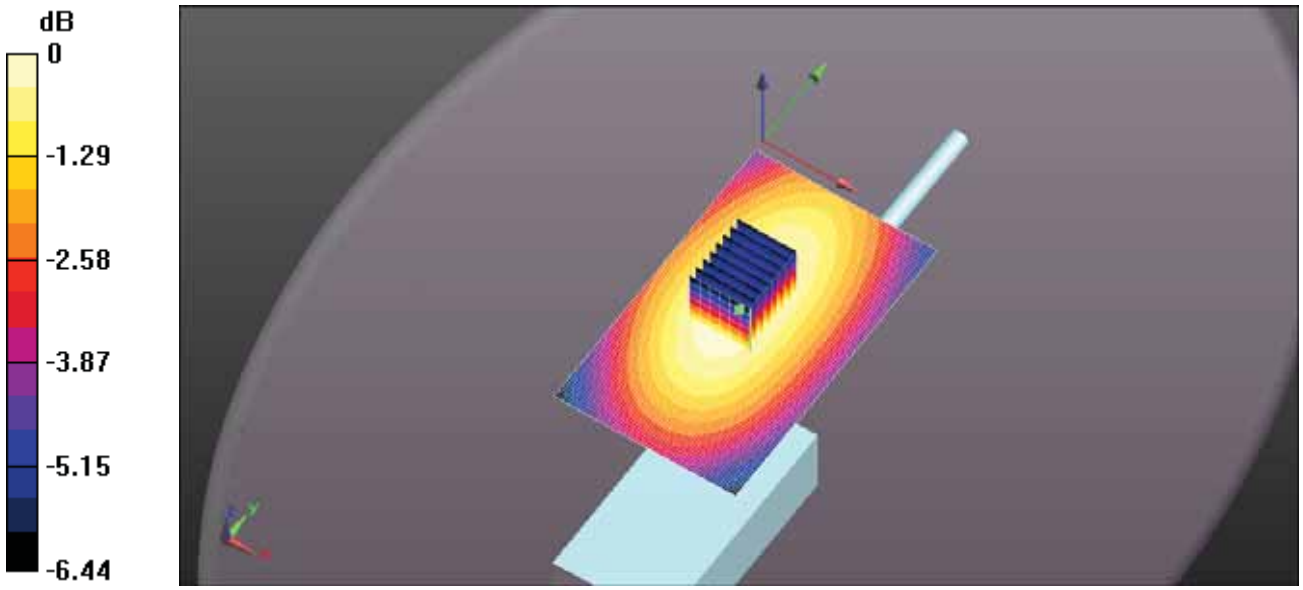

0 dB = 1.15 W/kg = 0.62 dBW/kg

Test Laboratory: Ultratech Group of Labs

FILE NAME: ICOM-489Q HEAD FA-SC61VC 169MM 155MHZ.DA52:0

DUT: IC-F1100DT; Type: VHF Receiver; Serial: 32000201-0

Communication System: UID 10000, CW; Frequency: 155 MHz; Duty Cycle: 1:1
Medium parameters used (interpolated): f = 155 MHz; σ = 0.795 S/m; ε_r = 54.309; ρ = 1000 kg/m^3 ;
Phantom section: Flat Section ; Measurement Standard: DASY5 (IEEE/IEC/ANSI C63.19-2011)

DASY Configuration:

- Probe: ES3DV3 - SN3250; ConvF(7.64, 7.64, 7.64); Calibrated: 3/13/2018;
- Sensor-Surface: 3mm (Mechanical Surface Detection)
- Electronics: DAE4 Sn874; Calibrated: 8/21/2017
- Phantom: ELI 4.0; Type: QD OVA 001 BB; Serial: 1057
- DASY52 52.10.0(1446); SEMCAD X 14.6.10(7417)

Configuration Head for IC-F1100DT/Head Front, P=5W, d=25mm/Zoom Scan (7x7x7) (7x7x7)/Cube 0: Measurement grid: dx=5mm, dy=5mm, dz=5mm
Reference Value = 23.32 V/m; Power Drift = -0.83 dB
Peak SAR (extrapolated) = 0.717 W/kg
SAR(1 g) = 0.510 W/kg; SAR(10 g) = 0.391 W/kg (SAR corrected for target medium)
Maximum value of SAR (measured) = 0.565 W/kg
Configuration Head for IC-F1100DT/Head Front, P=5W, d=25mm/Area Scan (61x101x1): Interpolated grid: dx=1.500 mm, dy=1.500 mm
Maximum value of SAR (interpolated) = 0.600 W/kg

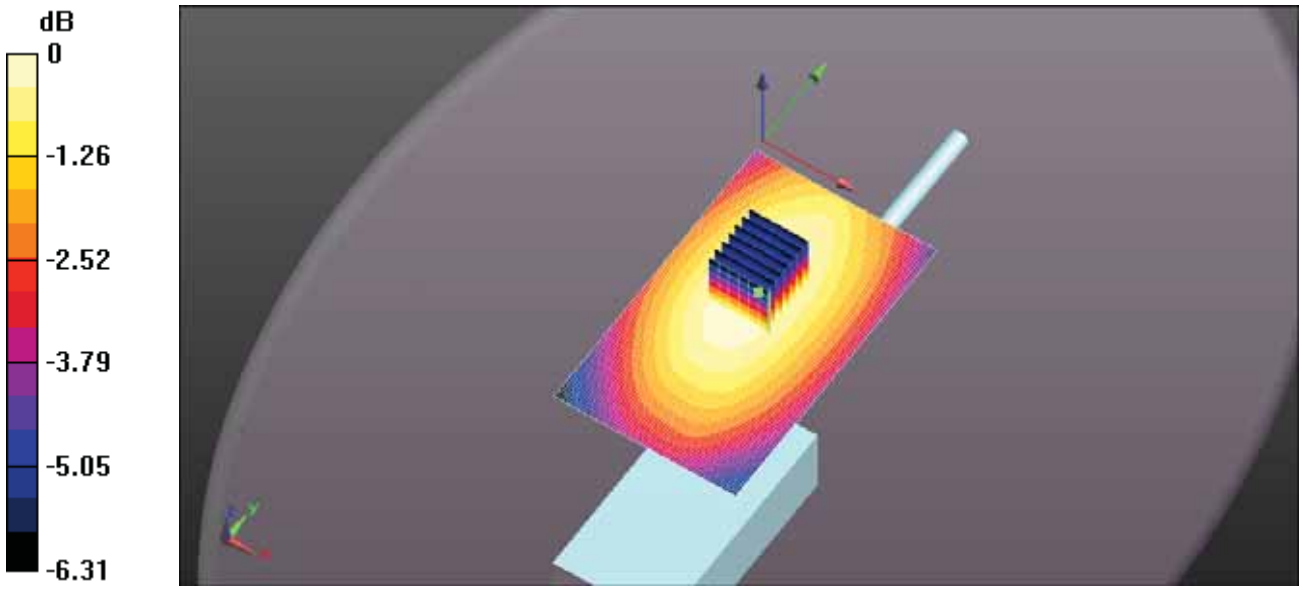

0 dB = 0.565 W/kg = -2.48 dBW/kg

Test Laboratory: Ultratech Group of Labs

FILE NAME: ICOM-489Q HEAD FA-SC61VC 169MM 161.3MHZ.DA52:0

DUT: IC-F1100DT; Type: VHF Receiver; Serial: 32000201-0

Communication System: UID 10000, CW; Frequency: 161.3 MHz; Duty Cycle: 1:1
Medium parameters used: f = 162 MHz; σ = 0.803 S/m; ε_r = 54.448; ρ = 1000 kg/m^3 ; Phantom section: Flat Section ; Measurement Standard: DASY5 (IEEE/IEC/ANSI C63.19-2011)

DASY Configuration:

- Probe: ES3DV3 - SN3250; ConvF(7.64, 7.64, 7.64); Calibrated: 3/13/2018;
- Sensor-Surface: 3mm (Mechanical Surface Detection)
- Electronics: DAE4 Sn874; Calibrated: 8/21/2017
- Phantom: ELI 4.0; Type: QD OVA 001 BB; Serial: 1057
- DASY52 52.10.0(1446); SEMCAD X 14.6.10(7417)

Configuration Head for IC-F1100DT/Head Front, P=5W, d=25mm/Zoom Scan (7x7x7) (7x7x7)/Cube 0: Measurement grid: dx=5mm, dy=5mm, dz=5mm
Reference Value = 18.12 V/m; Power Drift = -0.79 dB
Peak SAR (extrapolated) = 0.457 W/kg
SAR(1 g) = 0.324 W/kg; SAR(10 g) = 0.247 W/kg (SAR corrected for target medium)
Maximum value of SAR (measured) = 0.359 W/kg

Configuration Head for IC-F1100DT/Head Front, P=5W, d=25mm/Area Scan (61x101x1): Interpolated grid: dx=1.500 mm, dy=1.500 mm
Maximum value of SAR (interpolated) = 0.379 W/kg

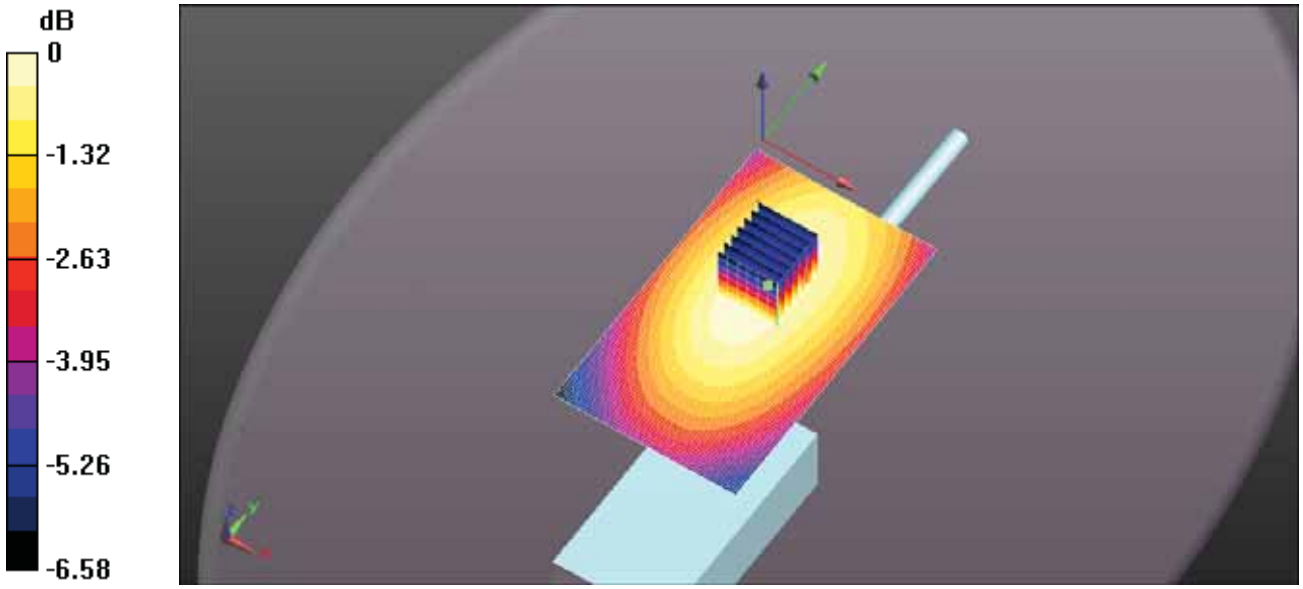

0 dB = 0.359 W/kg = -4.45 dBW/kg

Test Laboratory: Ultratech Group of Labs

FILE NAME: ICOM-489Q HEAD FA-SC61VC 169MM 167.7MHZ.DA52:0

DUT: IC-F1100DT; Type: VHF Receiver; Serial: 32000201-0

Communication System: UID 10000, CW; Frequency: 167.7 MHz; Duty Cycle: 1:1
Medium parameters used: f = 168 MHz; σ = 0.81 S/m; ε_r = 54.329; ρ = 1000 kg/m^3 ; Phantom section: Flat Section ; Measurement Standard: DASY5 (IEEE/IEC/ANSI C63.19-2011)

DASY Configuration:

- Probe: ES3DV3 - SN3250; ConvF(7.64, 7.64, 7.64); Calibrated: 3/13/2018;
- Sensor-Surface: 3mm (Mechanical Surface Detection)
- Electronics: DAE4 Sn874; Calibrated: 8/21/2017
- Phantom: ELI 4.0; Type: QD OVA 001 BB; Serial: 1057
- DASY52 52.10.0(1446); SEMCAD X 14.6.10(7417)

Configuration Head for IC-F1100DT/Head Front, P=5W, d=25mm/Zoom Scan (7x7x7) (7x7x7)/Cube 0: Measurement grid: dx=5mm, dy=5mm, dz=5mm
Reference Value = 11.11 V/m; Power Drift = 0.25 dB
Peak SAR (extrapolated) = 0.233 W/kg
SAR(1 g) = 0.164 W/kg; SAR(10 g) = 0.125 W/kg (SAR corrected for target medium)
Maximum value of SAR (measured) = 0.182 W/kg

Configuration Head for IC-F1100DT/Head Front, P=5W, d=25mm/Area Scan (61x101x1): Interpolated grid: dx=1.500 mm, dy=1.500 mm
Maximum value of SAR (interpolated) = 0.168 W/kg

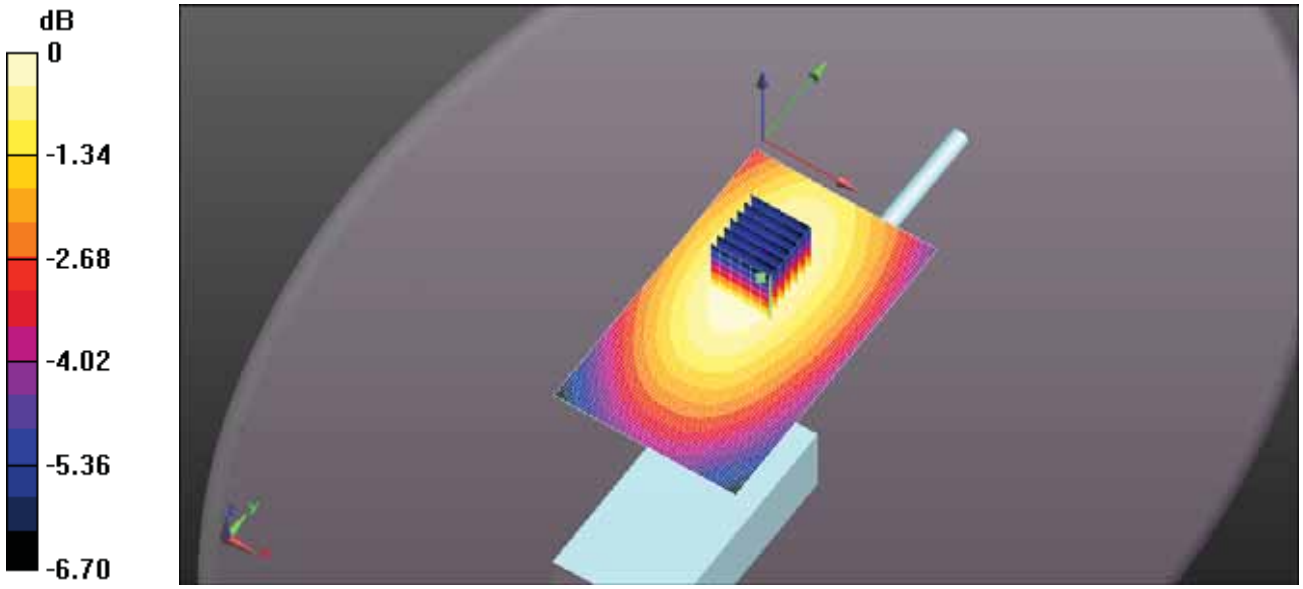

0 dB = 0.182 W/kg = -7.40 dBW/kg

Test Laboratory: Ultratech Group of Labs

FILE NAME: ICOM-489Q HEAD FA-SC61VC 169MM 174MHZ.DA52:0

DUT: IC-F1100DT; Type: VHF Receiver; Serial: 32000201-0

Communication System: UID 10000, CW; Frequency: 174 MHz; Duty Cycle: 1:1
Medium parameters used: f = 174 MHz; σ = 0.818 S/m; ε_r = 54.228; ρ = 1000 kg/m^3 ; Phantom section: Flat Section ; Measurement Standard: DASY5 (IEEE/IEC/ANSI C63.19-2011)

DASY Configuration:

- Probe: ES3DV3 - SN3250; ConvF(7.64, 7.64, 7.64); Calibrated: 3/13/2018;
- Sensor-Surface: 3mm (Mechanical Surface Detection)
- Electronics: DAE4 Sn874; Calibrated: 8/21/2017
- Phantom: ELI 4.0; Type: QD OVA 001 BB; Serial: 1057
- DASY52 52.10.0(1446); SEMCAD X 14.6.10(7417)

Configuration Head for IC-F1100DT/Head Front, P=5W, d=25mm/Zoom Scan (7x7x7) (9x7x7)/Cube 0: Measurement grid: dx=5mm, dy=5mm, dz=5mm
Reference Value = 7.961 V/m; Power Drift = 1.05 dB
Peak SAR (extrapolated) = 0.136 W/kg
SAR(1 g) = 0.095 W/kg; SAR(10 g) = 0.072 W/kg (SAR corrected for target medium)
Maximum value of SAR (measured) = 0.107 W/kg

Configuration Head for IC-F1100DT/Head Front, P=5W, d=25mm/Area Scan (61x101x1): Interpolated grid: dx=1.500 mm, dy=1.500 mm
Maximum value of SAR (interpolated) = 0.0881 W/kg

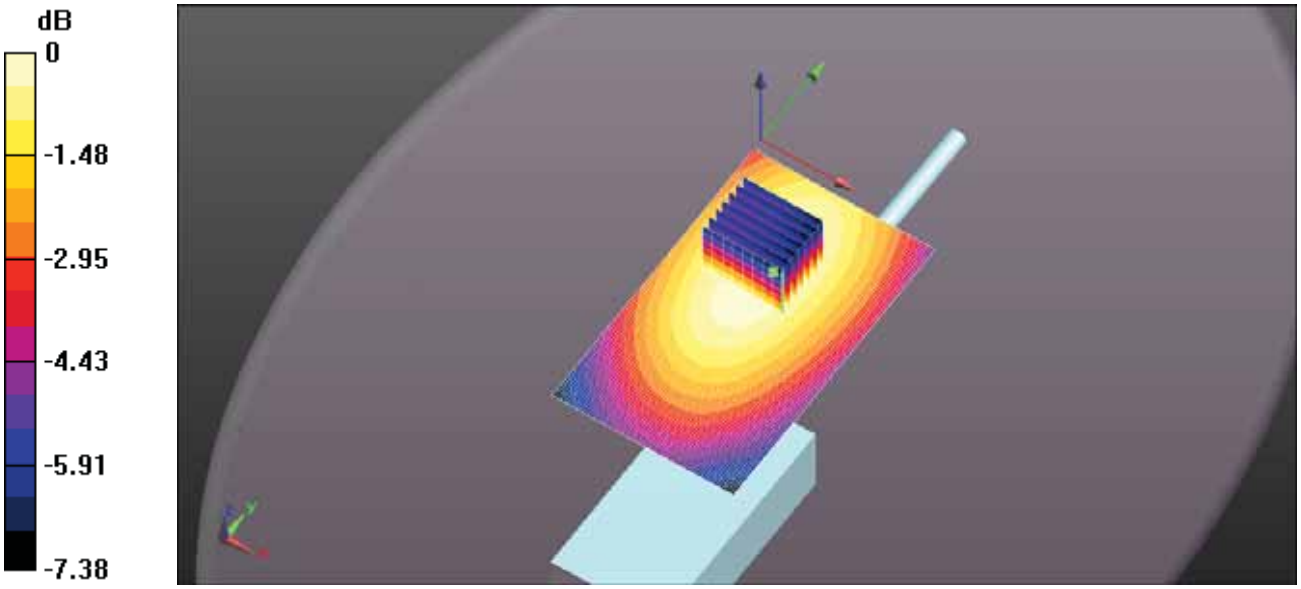

0 dB = 0.107 W/kg = -9.72 dBW/kg

Test Laboratory: Ultratech Group of Labs

FILE NAME: ICOM-489Q HEAD FA-SC61VC 163MM 136MHZ.DA52:0

DUT: IC-F1100DT; Type: VHF Receiver; Serial: 32000201-0

Communication System: UID 10000, CW; Frequency: 136 MHz; Duty Cycle: 1:1
Medium parameters used: f = 136 MHz; σ = 0.773 S/m; ε_r = 54.298; ρ = 1000 kg/m^3 ; Phantom section: Flat Section ; Measurement Standard: DASY5 (IEEE/IEC/ANSI C63.19-2011)

DASY Configuration:

- Probe: ES3DV3 - SN3250; ConvF(7.64, 7.64, 7.64); Calibrated: 3/13/2018;
- Sensor-Surface: 3mm (Mechanical Surface Detection)
- Electronics: DAE4 Sn874; Calibrated: 8/21/2017
- Phantom: ELI 4.0; Type: QD OVA 001 BB; Serial: 1057
- DASY52 52.10.0(1446); SEMCAD X 14.6.10(7417)

Configuration Head for IC-F1100DT/Head Front, P=5W, d=25mm/Zoom Scan (7x7x7) (7x7x7)/Cube 0: Measurement grid: dx=5mm, dy=5mm, dz=5mm
Reference Value = 22.59 V/m; Power Drift = 0.29 dB
Peak SAR (extrapolated) = 0.769 W/kg
SAR(1 g) = 0.539 W/kg; SAR(10 g) = 0.411 W/kg (SAR corrected for target medium)
Maximum value of SAR (measured) = 0.599 W/kg

Configuration Head for IC-F1100DT/Head Front, P=5W, d=25mm/Area Scan (61x101x1): Interpolated grid: dx=1.500 mm, dy=1.500 mm
Maximum value of SAR (interpolated) = 0.555 W/kg

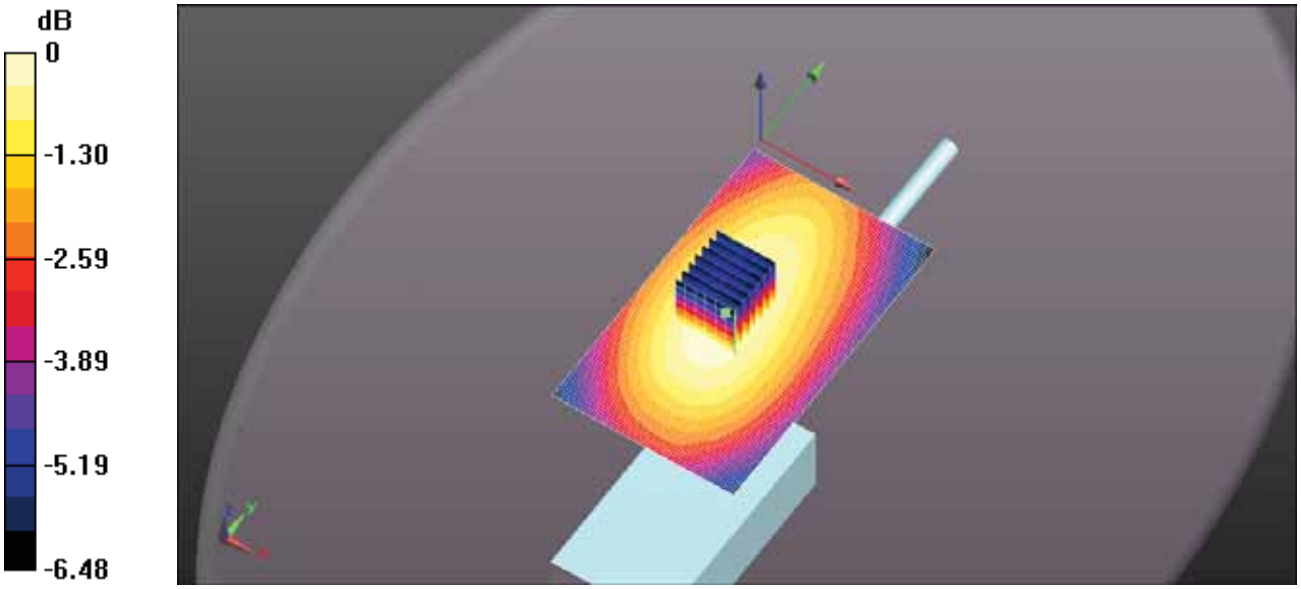

0 dB = 0.599 W/kg = -2.22 dBW/kg

Test Laboratory: Ultratech Group of Labs

FILE NAME: ICOM-489Q HEAD FA-SC61VC 163MM 142.3MHZ.DA52:0

DUT: IC-F1100DT; Type: VHF Receiver; Serial: 32000201-0

Communication System: UID 10000, CW; Frequency: 142.3 MHz; Duty Cycle: 1:1
Medium parameters used (interpolated): f = 142.3 MHz; σ = 0.78 S/m; ε_r = 54.488; ρ = 1000 kg/m^3 ;
Phantom section: Flat Section ; Measurement Standard: DASY5 (IEEE/IEC/ANSI C63.19-2011)

DASY Configuration:

- Probe: ES3DV3 - SN3250; ConvF(7.64, 7.64, 7.64); Calibrated: 3/13/2018;
- Sensor-Surface: 3mm (Mechanical Surface Detection)
- Electronics: DAE4 Sn874; Calibrated: 8/21/2017
- Phantom: ELI 4.0; Type: QD OVA 001 BB; Serial: 1057
- DASY52 52.10.0(1446); SEMCAD X 14.6.10(7417)

Configuration Head for IC-F1100DT/Head Front, P=5W, d=25mm/Zoom Scan (7x7x7) (7x7x7)/Cube 0: Measurement grid: dx=5mm, dy=5mm, dz=5mm
Reference Value = 30.08 V/m; Power Drift = -0.43 dB
Peak SAR (extrapolated) = 1.15 W/kg
SAR(1 g) = 0.810 W/kg; SAR(10 g) = 0.619 W/kg (SAR corrected for target medium)
Maximum value of SAR (measured) = 0.899 W/kg
Configuration Head for IC-F1100DT/Head Front, P=5W, d=25mm/Area Scan (61x101x1): Interpolated grid: dx=1.500 mm, dy=1.500 mm
Maximum value of SAR (interpolated) = 0.925 W/kg

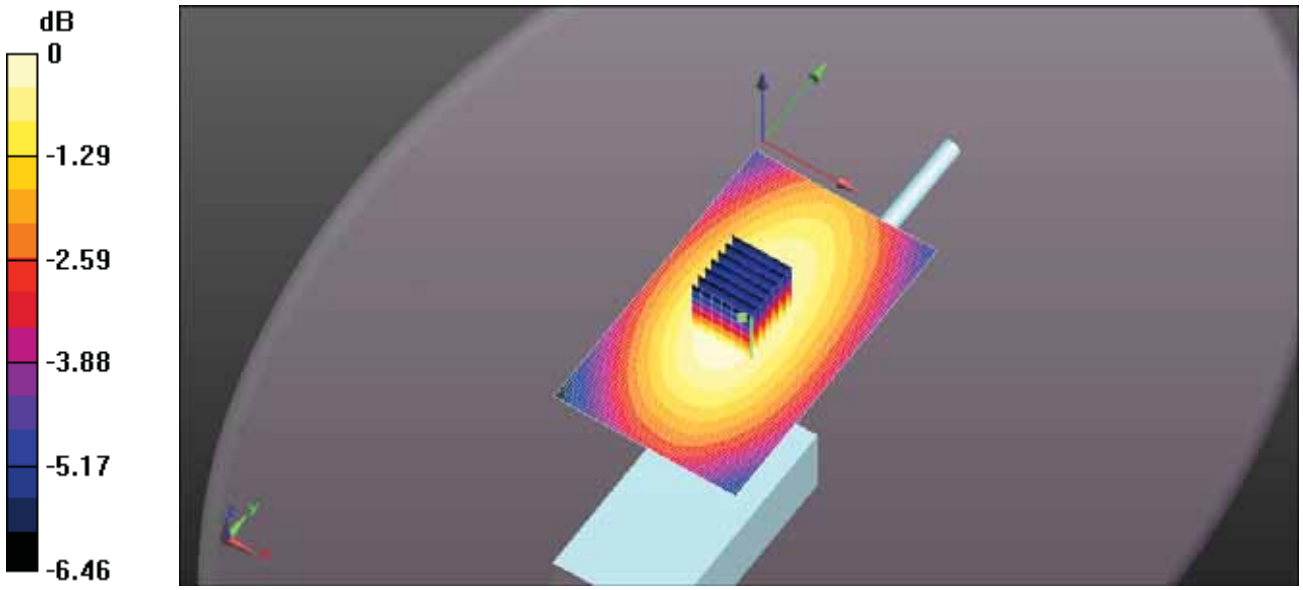

0 dB = 0.899 W/kg = -0.46 dBW/kg

Test Laboratory: Ultratech Group of Labs

FILE NAME: ICOM-489Q HEAD FA-SC61VC 163MM 148.7MHZ.DA52:0

DUT: IC-F1100DT; Type: VHF Receiver; Serial: 32000201-0

Communication System: UID 10000, CW; Frequency: 148.7 MHz; Duty Cycle: 1:1
Medium parameters used (interpolated): f = 148.7 MHz; σ = 0.787 S/m; ε_r = 54.353; ρ = 1000 kg/m^3 ;
Phantom section: Flat Section ; Measurement Standard: DASY5 (IEEE/IEC/ANSI C63.19-2011)

DASY Configuration:

- Probe: ES3DV3 - SN3250; ConvF(7.64, 7.64, 7.64); Calibrated: 3/13/2018;
- Sensor-Surface: 3mm (Mechanical Surface Detection)
- Electronics: DAE4 Sn874; Calibrated: 8/21/2017
- Phantom: ELI 4.0; Type: QD OVA 001 BB; Serial: 1057
- DASY52 52.10.0(1446); SEMCAD X 14.6.10(7417)

Configuration Head for IC-F1100DT/Head Front, P=5W, d=25mm/Zoom Scan (7x7x7) (7x7x7)/Cube 0: Measurement grid: dx=5mm, dy=5mm, dz=5mm
Reference Value = 45.30 V/m; Power Drift = -1.76 dB
Peak SAR (extrapolated) = 1.96 W/kg
SAR(1 g) = 1.36 W/kg; SAR(10 g) = 1.03 W/kg (SAR corrected for target medium)
Maximum value of SAR (measured) = 1.52 W/kg
Configuration Head for IC-F1100DT/Head Front, P=5W, d=25mm/Area Scan (61x101x1): Interpolated grid: dx=1.500 mm, dy=1.500 mm
Maximum value of SAR (interpolated) = 1.70 W/kg

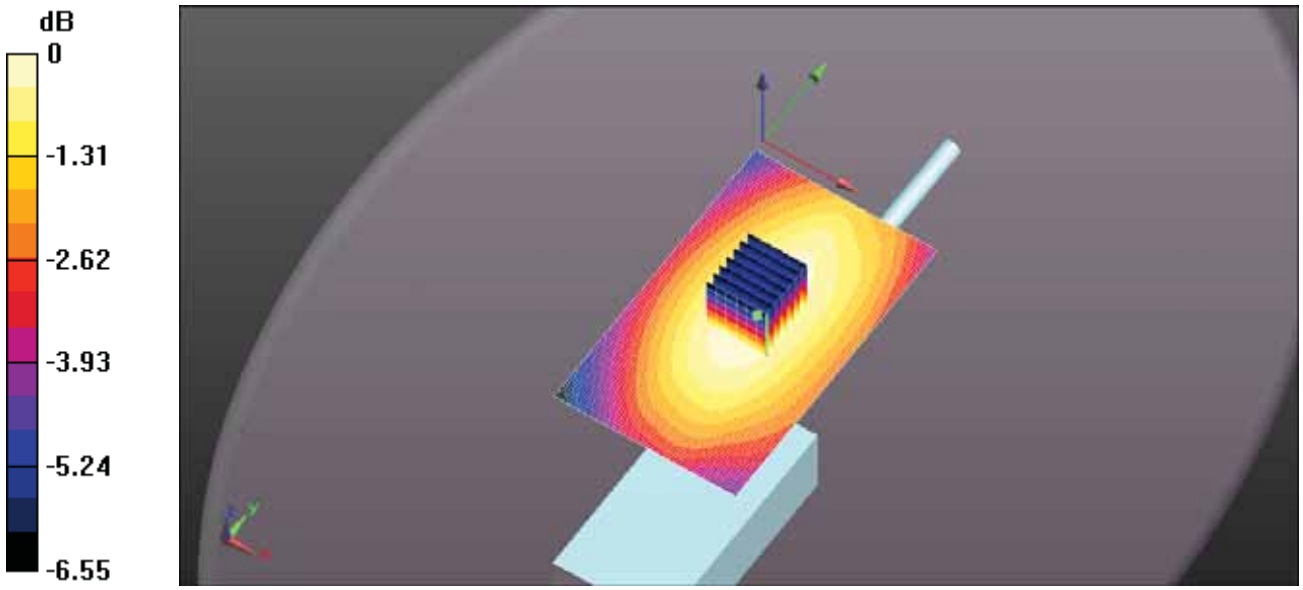

0 dB = 1.52 W/kg = 1.81 dBW/kg

Test Laboratory: Ultratech Group of Labs

FILE NAME: ICOM-489Q HEAD FA-SC61VC 163MM 155MHZ.DA52:0

DUT: IC-F1100DT; Type: VHF Receiver; Serial: 32000201-0

Communication System: UID 10000, CW; Frequency: 155 MHz; Duty Cycle: 1:1
Medium parameters used (interpolated): f = 155 MHz; σ = 0.795 S/m; ε_r = 54.309; ρ = 1000 kg/m^3 ;
Phantom section: Flat Section ; Measurement Standard: DASY5 (IEEE/IEC/ANSI C63.19-2011)

DASY Configuration:

- Probe: ES3DV3 - SN3250; ConvF(7.64, 7.64, 7.64); Calibrated: 3/13/2018;
- Sensor-Surface: 3mm (Mechanical Surface Detection)
- Electronics: DAE4 Sn874; Calibrated: 8/21/2017
- Phantom: ELI 4.0; Type: QD OVA 001 BB; Serial: 1057
- DASY52 52.10.0(1446); SEMCAD X 14.6.10(7417)

Configuration Head for IC-F1100DT/Head Front, P=5W, d=25mm/Zoom Scan (7x7x7) (7x7x7)/Cube 0: Measurement grid: dx=5mm, dy=5mm, dz=5mm
Reference Value = 31.65 V/m; Power Drift = -0.71 dB
Peak SAR (extrapolated) = 1.35 W/kg
SAR(1 g) = 0.940 W/kg; SAR(10 g) = 0.713 W/kg (SAR corrected for target medium)
Maximum value of SAR (measured) = 1.05 W/kg
Configuration Head for IC-F1100DT/Head Front, P=5W, d=25mm/Area Scan (61x101x1): Interpolated grid: dx=1.500 mm, dy=1.500 mm
Maximum value of SAR (interpolated) = 1.09 W/kg

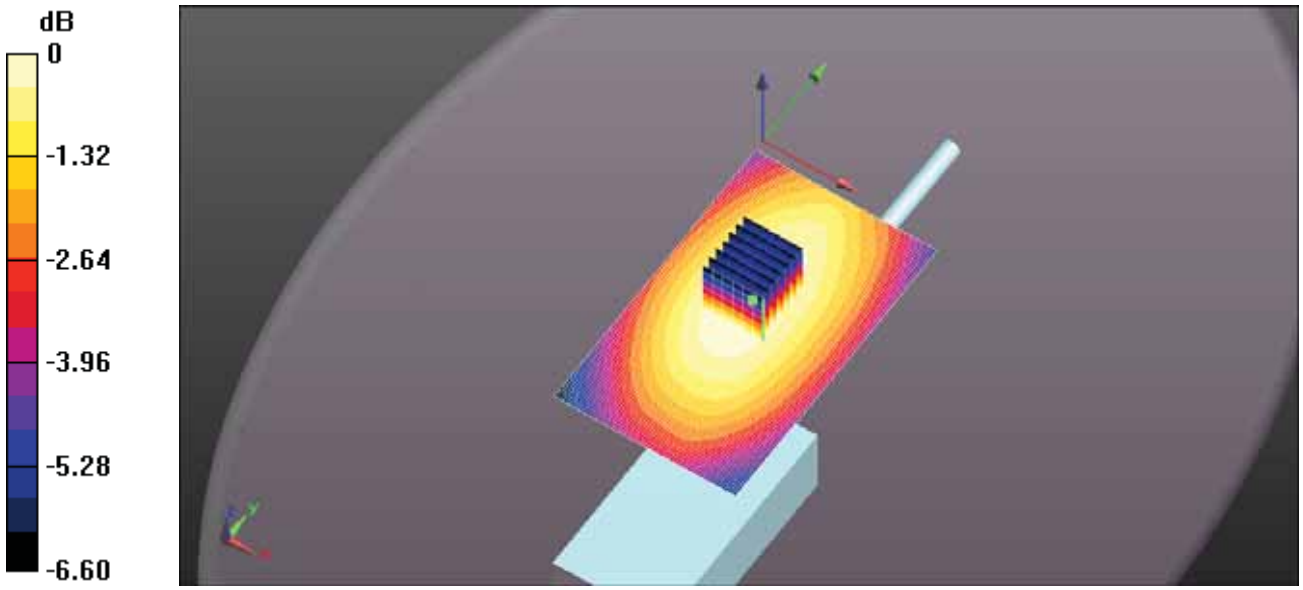

0 dB = 1.05 W/kg = 0.19 dBW/kg

Test Laboratory: Ultratech Group of Labs

FILE NAME: ICOM-489Q HEAD FA-SC61VC 163MM 161.3MHZ.DA52:0

DUT: IC-F1100DT; Type: VHF Receiver; Serial: 32000201-0

Communication System: UID 10000, CW; Frequency: 161.3 MHz; Duty Cycle: 1:1
Medium parameters used: f = 162 MHz; σ = 0.803 S/m; ε_r = 54.448; ρ = 1000 kg/m^3 ; Phantom section: Flat Section ; Measurement Standard: DASY5 (IEEE/IEC/ANSI C63.19-2011)

DASY Configuration:

- Probe: ES3DV3 - SN3250; ConvF(7.64, 7.64, 7.64); Calibrated: 3/13/2018;
- Sensor-Surface: 3mm (Mechanical Surface Detection)
- Electronics: DAE4 Sn874; Calibrated: 8/21/2017
- Phantom: ELI 4.0; Type: QD OVA 001 BB; Serial: 1057
- DASY52 52.10.0(1446); SEMCAD X 14.6.10(7417)

Configuration Head for IC-F1100DT/Head Front, P=5W, d=25mm/Zoom Scan (7x7x7) (7x7x7)/Cube 0: Measurement grid: dx=5mm, dy=5mm, dz=5mm
Reference Value = 24.18 V/m; Power Drift = -0.98 dB
Peak SAR (extrapolated) = 0.801 W/kg
SAR(1 g) = 0.558 W/kg; SAR(10 g) = 0.423 W/kg (SAR corrected for target medium)
Maximum value of SAR (measured) = 0.622 W/kg

Configuration Head for IC-F1100DT/Head Front, P=5W, d=25mm/Area Scan (61x101x1): Interpolated grid: dx=1.500 mm, dy=1.500 mm
Maximum value of SAR (interpolated) = 0.649 W/kg

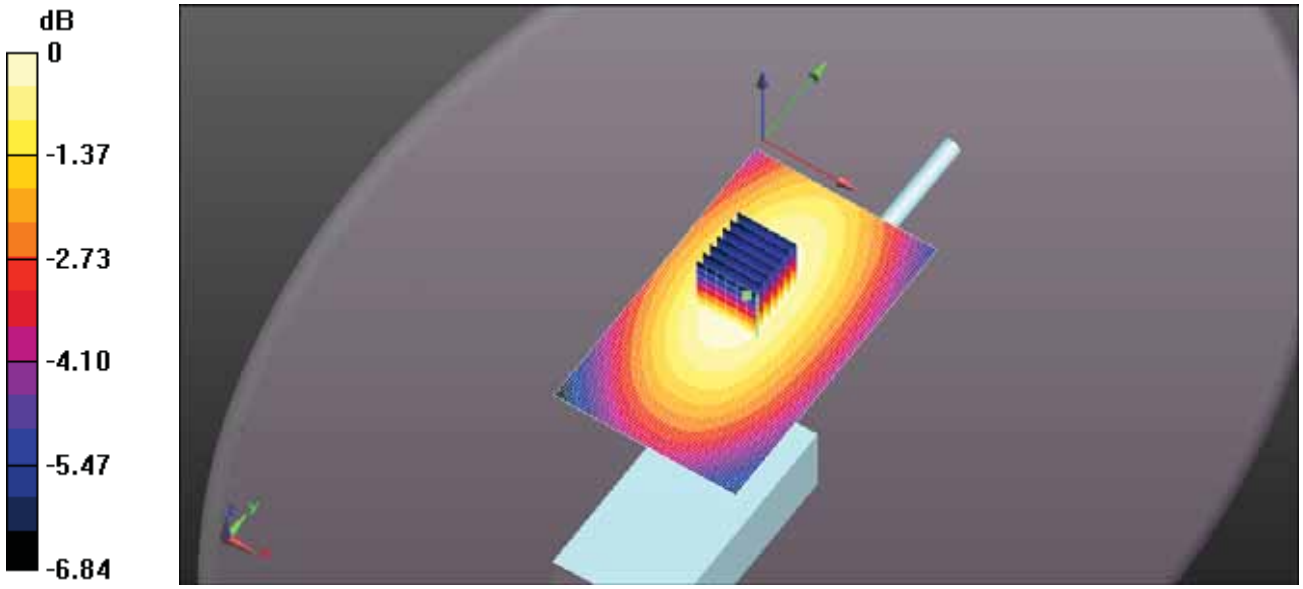

0 dB = 0.622 W/kg = -2.06 dBW/kg

Test Laboratory: Ultratech Group of Labs

FILE NAME: ICOM-489Q HEAD FA-SC61VC 163MM 167.7MHZ.DA52:0

DUT: IC-F1100DT; Type: VHF Receiver; Serial: 32000201-0

Communication System: UID 10000, CW; Frequency: 167.7 MHz; Duty Cycle: 1:1
Medium parameters used: f = 168 MHz; σ = 0.81 S/m; ε_r = 54.329; ρ = 1000 kg/m^3 ; Phantom section: Flat Section ; Measurement Standard: DASY5 (IEEE/IEC/ANSI C63.19-2011)

DASY Configuration:

- Probe: ES3DV3 - SN3250; ConvF(7.64, 7.64, 7.64); Calibrated: 3/13/2018;
- Sensor-Surface: 3mm (Mechanical Surface Detection)
- Electronics: DAE4 Sn874; Calibrated: 8/21/2017
- Phantom: ELI 4.0; Type: QD OVA 001 BB; Serial: 1057
- DASY52 52.10.0(1446); SEMCAD X 14.6.10(7417)

Configuration Head for IC-F1100DT/Head Front, P=5W, d=25mm/Zoom Scan (7x7x7) (7x7x7)/Cube 0: Measurement grid: dx=5mm, dy=5mm, dz=5mm
Reference Value = 15.52 V/m; Power Drift = 0.16 dB
Peak SAR (extrapolated) = 0.419 W/kg
SAR(1 g) = 0.294 W/kg; SAR(10 g) = 0.222 W/kg (SAR corrected for target medium)
Maximum value of SAR (measured) = 0.327 W/kg

Configuration Head for IC-F1100DT/Head Front, P=5W, d=25mm/Area Scan (61x101x1): Interpolated grid: dx=1.500 mm, dy=1.500 mm
Maximum value of SAR (interpolated) = 0.308 W/kg

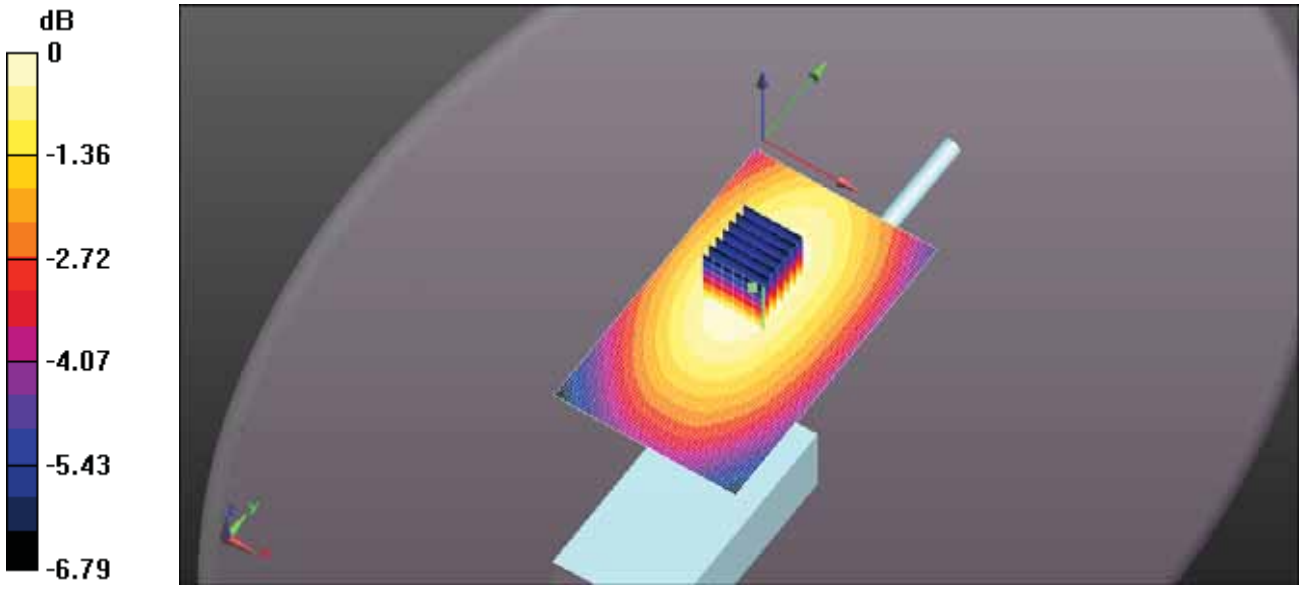

0 dB = 0.327 W/kg = -4.86 dBW/kg

Test Laboratory: Ultratech Group of Labs

FILE NAME: ICOM-489Q HEAD FA-SC61VC 163MM 174MHZ.DA52:0

DUT: IC-F1100DT; Type: VHF Receiver; Serial: 32000201-0

Communication System: UID 10000, CW; Frequency: 174 MHz; Duty Cycle: 1:1
Medium parameters used: f = 174 MHz; σ = 0.818 S/m; ε_r = 54.228; ρ = 1000 kg/m^3 ; Phantom section: Flat Section ; Measurement Standard: DASY5 (IEEE/IEC/ANSI C63.19-2011)

DASY Configuration:

- Probe: ES3DV3 - SN3250; ConvF(7.64, 7.64, 7.64); Calibrated: 3/13/2018;
- Sensor-Surface: 3mm (Mechanical Surface Detection)
- Electronics: DAE4 Sn874; Calibrated: 8/21/2017
- Phantom: ELI 4.0; Type: QD OVA 001 BB; Serial: 1057
- DASY52 52.10.0(1446); SEMCAD X 14.6.10(7417)

Configuration Head for IC-F1100DT/Head Front, P=5W, d=25mm/Zoom Scan (7x7x7) (8x7x7)/Cube 0: Measurement grid: dx=5mm, dy=5mm, dz=5mm
Reference Value = 9.887 V/m; Power Drift = 1.06 dB
Peak SAR (extrapolated) = 0.204 W/kg
SAR(1 g) = 0.143 W/kg; SAR(10 g) = 0.108 W/kg (SAR corrected for target medium)
Maximum value of SAR (measured) = 0.159 W/kg

Configuration Head for IC-F1100DT/Head Front, P=5W, d=25mm/Area Scan (61x101x1): Interpolated grid: dx=1.500 mm, dy=1.500 mm
Maximum value of SAR (interpolated) = 0.140 W/kg

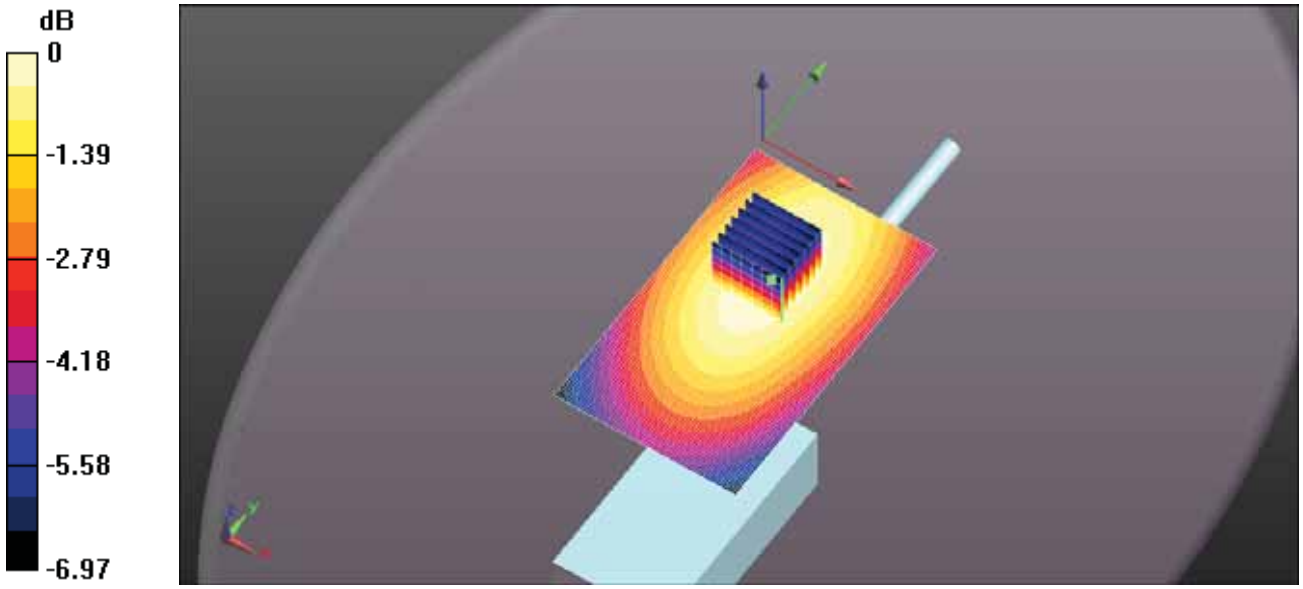

0 dB = 0.159 W/kg = -7.98 dBW/kg

Test Laboratory: Ultratech Group of Labs

FILE NAME: ICOM-489Q HEAD FA-SC61VC 157MM 136MHZ.DA52:0

DUT: IC-F1100DT; Type: VHF Receiver; Serial: 32000201-0

Communication System: UID 10000, CW; Frequency: 136 MHz; Duty Cycle: 1:1
Medium parameters used: f = 136 MHz; σ = 0.773 S/m; ε_r = 54.298; ρ = 1000 kg/m^3 ; Phantom section: Flat Section ; Measurement Standard: DASY5 (IEEE/IEC/ANSI C63.19-2011)

DASY Configuration:

- Probe: ES3DV3 - SN3250; ConvF(7.64, 7.64, 7.64); Calibrated: 3/13/2018;
- Sensor-Surface: 3mm (Mechanical Surface Detection)
- Electronics: DAE4 Sn874; Calibrated: 8/21/2017
- Phantom: ELI 4.0; Type: QD OVA 001 BB; Serial: 1057
- DASY52 52.10.0(1446); SEMCAD X 14.6.10(7417)

Configuration Head for IC-F1100DT/Head Front, P=5W, d=25mm/Zoom Scan (7x7x7) (7x7x7)/Cube 0: Measurement grid: dx=5mm, dy=5mm, dz=5mm
Reference Value = 17.97 V/m; Power Drift = 0.85 dB
Peak SAR (extrapolated) = 0.515 W/kg
SAR(1 g) = 0.363 W/kg; SAR(10 g) = 0.276 W/kg (SAR corrected for target medium)
Maximum value of SAR (measured) = 0.403 W/kg

Configuration Head for IC-F1100DT/Head Front, P=5W, d=25mm/Area Scan (61x101x1): Interpolated grid: dx=1.500 mm, dy=1.500 mm
Maximum value of SAR (interpolated) = 0.350 W/kg

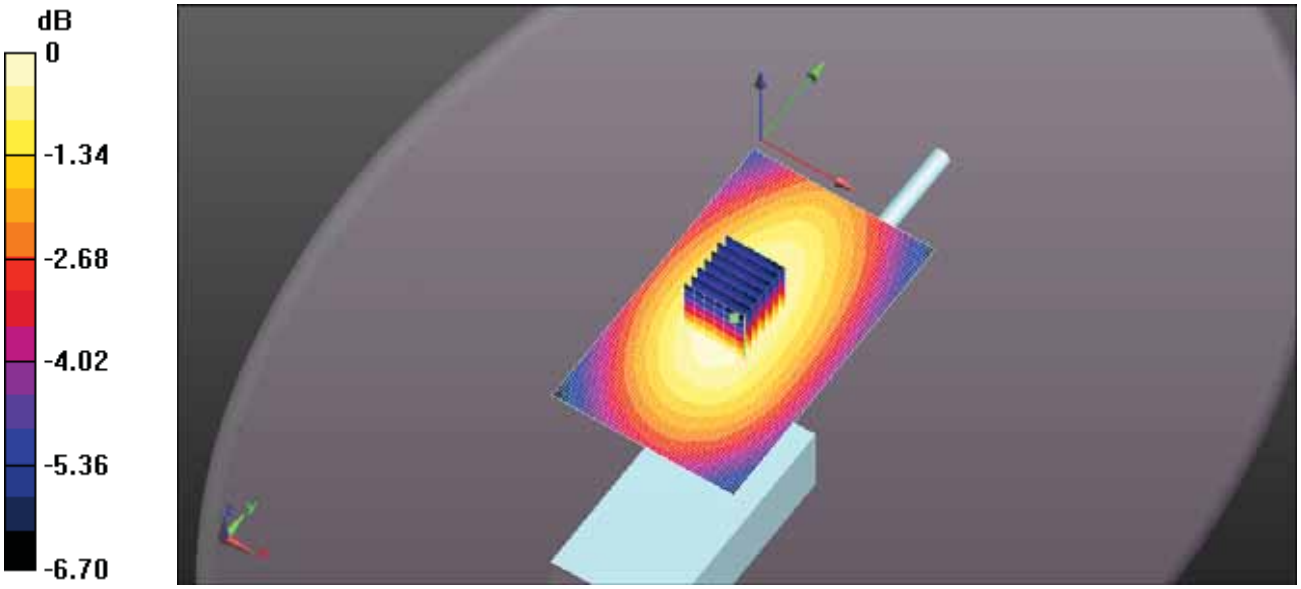

0 dB = 0.403 W/kg = -3.95 dBW/kg

Test Laboratory: Ultratech Group of Labs

FILE NAME: ICOM-489Q HEAD FA-SC61VC 157MM 142.3MHZ.DA52:0

DUT: IC-F1100DT; Type: VHF Receiver; Serial: 32000201-0

Communication System: UID 10000, CW; Frequency: 142.3 MHz; Duty Cycle: 1:1
Medium parameters used (interpolated): f = 142.3 MHz; σ = 0.78 S/m; ε_r = 54.488; ρ = 1000 kg/m^3 ;
Phantom section: Flat Section ; Measurement Standard: DASY5 (IEEE/IEC/ANSI C63.19-2011)

DASY Configuration:

- Probe: ES3DV3 - SN3250; ConvF(7.64, 7.64, 7.64); Calibrated: 3/13/2018;
- Sensor-Surface: 3mm (Mechanical Surface Detection)
- Electronics: DAE4 Sn874; Calibrated: 8/21/2017
- Phantom: ELI 4.0; Type: QD OVA 001 BB; Serial: 1057
- DASY52 52.10.0(1446); SEMCAD X 14.6.10(7417)

Configuration Head for IC-F1100DT/Head Front, P=5W, d=25mm/Zoom Scan (7x7x7) (7x7x7)/Cube 0: Measurement grid: dx=5mm, dy=5mm, dz=5mm
Reference Value = 25.10 V/m; Power Drift = -0.61 dB
Peak SAR (extrapolated) = 0.731 W/kg
SAR(1 g) = 0.516 W/kg; SAR(10 g) = 0.394 W/kg (SAR corrected for target medium)
Maximum value of SAR (measured) = 0.573 W/kg
Configuration Head for IC-F1100DT/Head Front, P=5W, d=25mm/Area Scan (61x101x1): Interpolated grid: dx=1.500 mm, dy=1.500 mm
Maximum value of SAR (interpolated) = 0.602 W/kg

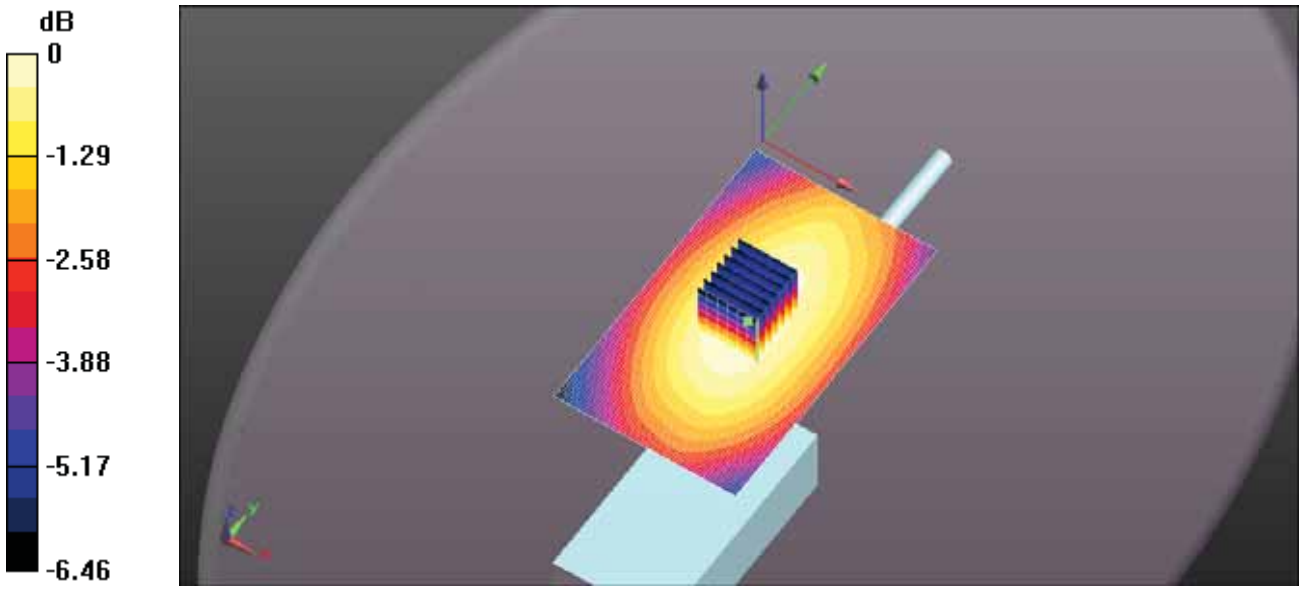

0 dB = 0.573 W/kg = -2.42 dBW/kg

Test Laboratory: Ultratech Group of Labs

FILE NAME: ICOM-489Q HEAD FA-SC61VC 157MM 148.7MHZ.DA52:0

DUT: IC-F1100DT; Type: VHF Receiver; Serial: 32000201-0

Communication System: UID 10000, CW; Frequency: 148.7 MHz; Duty Cycle: 1:1
Medium parameters used (interpolated): f = 148.7 MHz; σ = 0.787 S/m; ε_r = 54.353; ρ = 1000 kg/m^3 ;
Phantom section: Flat Section ; Measurement Standard: DASY5 (IEEE/IEC/ANSI C63.19-2011)

DASY Configuration:

- Probe: ES3DV3 - SN3250; ConvF(7.64, 7.64, 7.64); Calibrated: 3/13/2018;
- Sensor-Surface: 3mm (Mechanical Surface Detection)
- Electronics: DAE4 Sn874; Calibrated: 8/21/2017
- Phantom: ELI 4.0; Type: QD OVA 001 BB; Serial: 1057
- DASY52 52.10.0(1446); SEMCAD X 14.6.10(7417)

Configuration Head for IC-F1100DT/Head Front, P=5W, d=25mm/Zoom Scan (7x7x7) (7x7x7)/Cube 0: Measurement grid: dx=5mm, dy=5mm, dz=5mm
Reference Value = 34.85 V/m; Power Drift = -0.97 dB
Peak SAR (extrapolated) = 1.40 W/kg
SAR(1 g) = 0.990 W/kg; SAR(10 g) = 0.756 W/kg (SAR corrected for target medium)
Maximum value of SAR (measured) = 1.10 W/kg
Configuration Head for IC-F1100DT/Head Front, P=5W, d=25mm/Area Scan (61x101x1): Interpolated grid: dx=1.500 mm, dy=1.500 mm
Maximum value of SAR (interpolated) = 1.17 W/kg

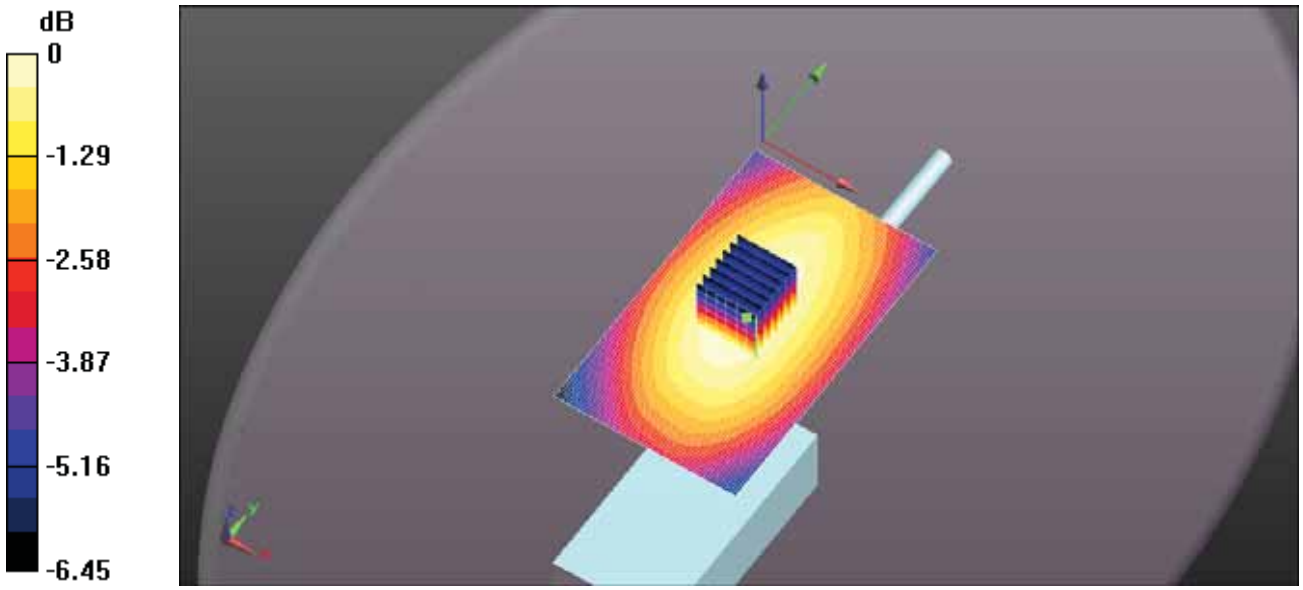

0 dB = 1.10 W/kg = 0.40 dBW/kg

Test Laboratory: Ultratech Group of Labs

FILE NAME: ICOM-489Q HEAD FA-SC61VC 157MM 155MHZ.DA52:0

DUT: IC-F1100DT; Type: VHF Receiver; Serial: 32000201-0

Communication System: UID 10000, CW; Frequency: 155 MHz; Duty Cycle: 1:1
Medium parameters used (interpolated): f = 155 MHz; σ = 0.795 S/m; ε_r = 54.309; ρ = 1000 kg/m^3 ;
Phantom section: Flat Section ; Measurement Standard: DASY5 (IEEE/IEC/ANSI C63.19-2011)

DASY Configuration:

- Probe: ES3DV3 - SN3250; ConvF(7.64, 7.64, 7.64); Calibrated: 3/13/2018;
- Sensor-Surface: 3mm (Mechanical Surface Detection)
- Electronics: DAE4 Sn874; Calibrated: 8/21/2017
- Phantom: ELI 4.0; Type: QD OVA 001 BB; Serial: 1057
- DASY52 52.10.0(1446); SEMCAD X 14.6.10(7417)

Configuration Head for IC-F1100DT/Head Front, P=5W, d=25mm/Zoom Scan (7x7x7) (7x7x7)/Cube 0: Measurement grid: dx=5mm, dy=5mm, dz=5mm
Reference Value = 40.04 V/m; Power Drift = -0.60 dB
Peak SAR (extrapolated) = 2.02 W/kg
SAR(1 g) = 1.42 W/kg; SAR(10 g) = 1.08 W/kg (SAR corrected for target medium)
Maximum value of SAR (measured) = 1.58 W/kg
Configuration Head for IC-F1100DT/Head Front, P=5W, d=25mm/Area Scan (61x101x1): Interpolated grid: dx=1.500 mm, dy=1.500 mm
Maximum value of SAR (interpolated) = 1.64 W/kg

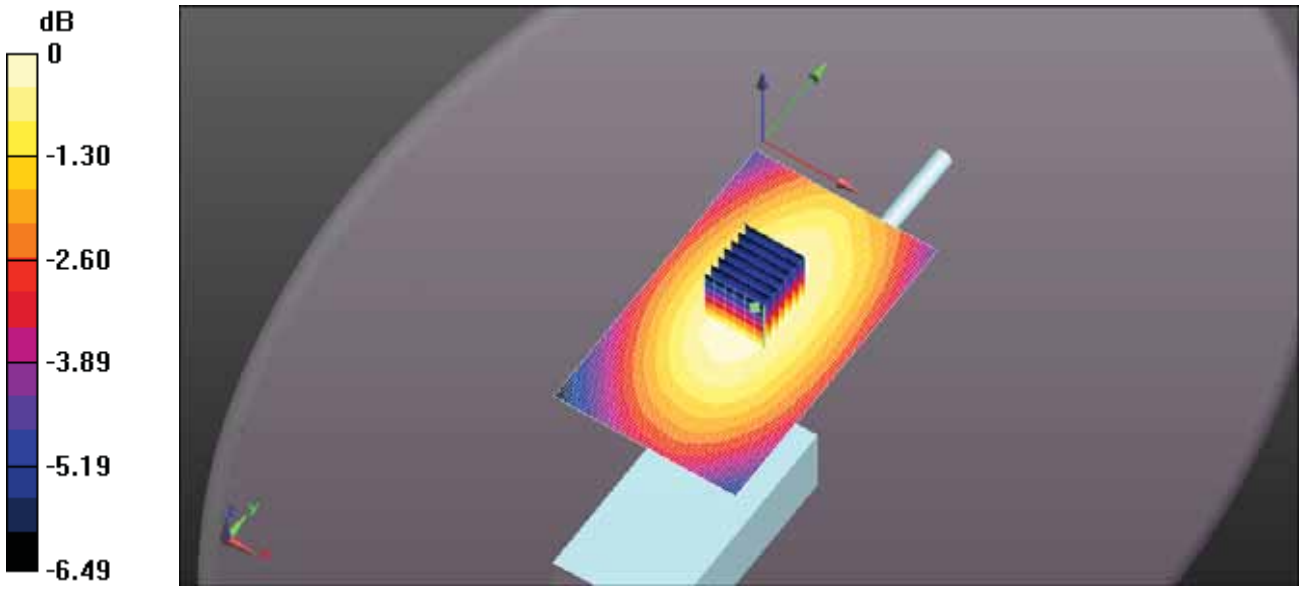

0 dB = 1.58 W/kg = 1.99 dBW/kg

Test Laboratory: Ultratech Group of Labs

FILE NAME: ICOM-489Q HEAD FA-SC61VC 157MM 161.3MHZ.DA52:0

DUT: IC-F1100DT; Type: VHF Receiver; Serial: 32000201-0

Communication System: UID 10000, CW; Frequency: 161.3 MHz; Duty Cycle: 1:1
Medium parameters used: f = 162 MHz; σ = 0.803 S/m; ε_r = 54.448; ρ = 1000 kg/m^3 ; Phantom section: Flat Section ; Measurement Standard: DASY5 (IEEE/IEC/ANSI C63.19-2011)

DASY Configuration:

- Probe: ES3DV3 - SN3250; ConvF(7.64, 7.64, 7.64); Calibrated: 3/13/2018;
- Sensor-Surface: 3mm (Mechanical Surface Detection)
- Electronics: DAE4 Sn874; Calibrated: 8/21/2017
- Phantom: ELI 4.0; Type: QD OVA 001 BB; Serial: 1057
- DASY52 52.10.0(1446); SEMCAD X 14.6.10(7417)

Configuration Head for IC-F1100DT/Head Front, P=5W, d=25mm/Zoom Scan (7x7x7) (7x7x7)/Cube 0: Measurement grid: dx=5mm, dy=5mm, dz=5mm
Reference Value = 32.82 V/m; Power Drift = -0.67 dB
Peak SAR (extrapolated) = 1.38 W/kg
SAR(1 g) = 0.974 W/kg; SAR(10 g) = 0.742 W/kg (SAR corrected for target medium)
Maximum value of SAR (measured) = 1.08 W/kg

Configuration Head for IC-F1100DT/Head Front, P=5W, d=25mm/Area Scan (61x101x1): Interpolated grid: dx=1.500 mm, dy=1.500 mm
Maximum value of SAR (interpolated) = 1.13 W/kg

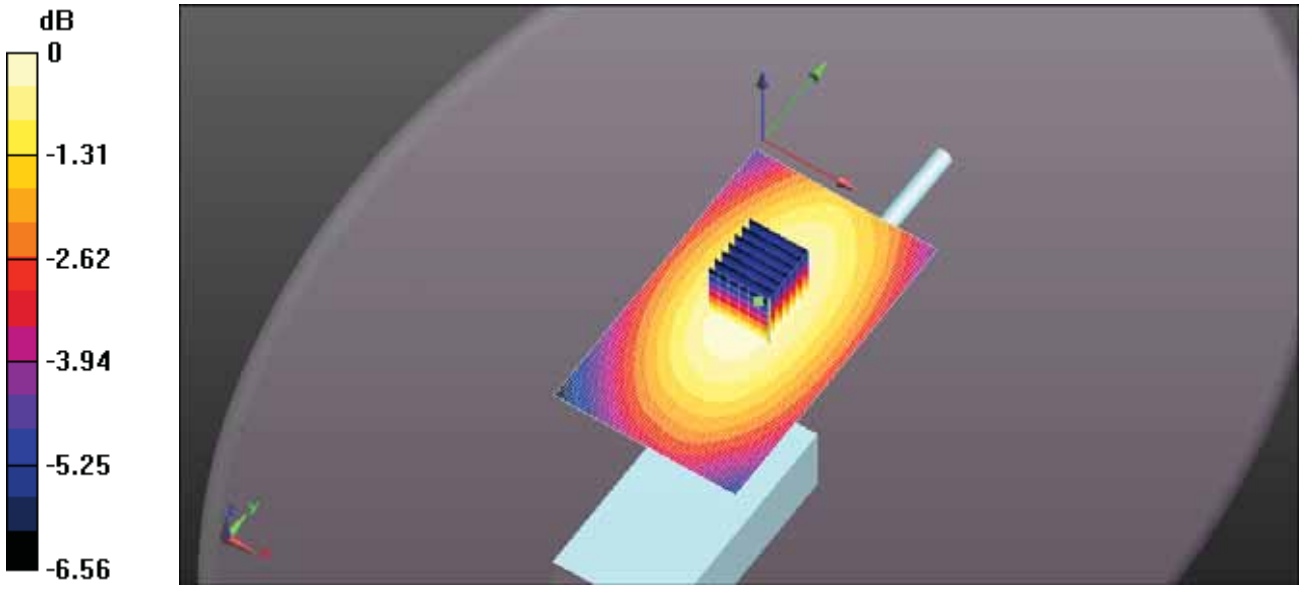

0 dB = 1.08 W/kg = 0.35 dBW/kg

Test Laboratory: Ultratech Group of Labs

FILE NAME: ICOM-489Q HEAD FA-SC61VC 157MM 167.7MHZ.DA52:0

DUT: IC-F1100DT; Type: VHF Receiver; Serial: 32000201-0

Communication System: UID 10000, CW; Frequency: 167.7 MHz; Duty Cycle: 1:1
Medium parameters used: f = 168 MHz; σ = 0.81 S/m; ε_r = 54.329; ρ = 1000 kg/m^3 ; Phantom section: Flat Section ; Measurement Standard: DASY5 (IEEE/IEC/ANSI C63.19-2011)

DASY Configuration:

- Probe: ES3DV3 - SN3250; ConvF(7.64, 7.64, 7.64); Calibrated: 3/13/2018;
- Sensor-Surface: 3mm (Mechanical Surface Detection)
- Electronics: DAE4 Sn874; Calibrated: 8/21/2017
- Phantom: ELI 4.0; Type: QD OVA 001 BB; Serial: 1057
- DASY52 52.10.0(1446); SEMCAD X 14.6.10(7417)

Configuration Head for IC-F1100DT/Head Front, P=5W, d=25mm/Zoom Scan (7x7x7) (7x7x7)/Cube 0: Measurement grid: dx=5mm, dy=5mm, dz=5mm
Reference Value = 22.41 V/m; Power Drift = -0.10 dB
Peak SAR (extrapolated) = 0.765 W/kg
SAR(1 g) = 0.534 W/kg; SAR(10 g) = 0.404 W/kg (SAR corrected for target medium)
Maximum value of SAR (measured) = 0.597 W/kg

Configuration Head for IC-F1100DT/Head Front, P=5W, d=25mm/Area Scan (61x101x1): Interpolated grid: dx=1.500 mm, dy=1.500 mm
Maximum value of SAR (interpolated) = 0.583 W/kg

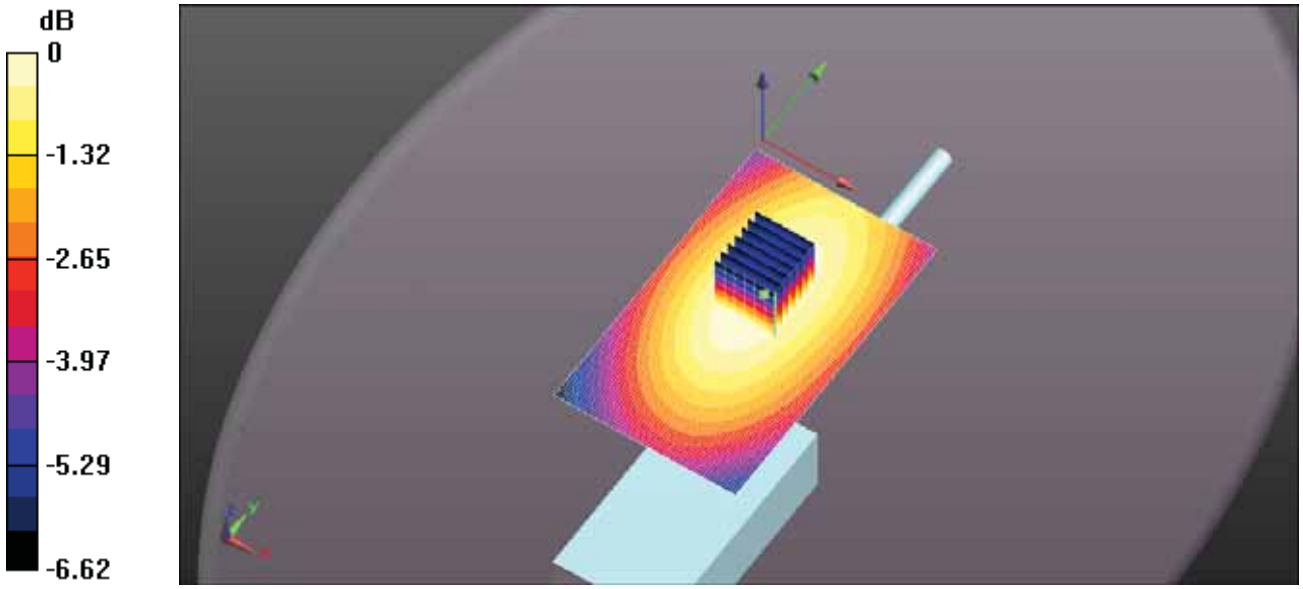

0 dB = 0.597 W/kg = -2.24 dBW/kg

Test Laboratory: Ultratech Group of Labs

FILE NAME: ICOM-489Q HEAD FA-SC61VC 157MM 174MHZ.DA52:0

DUT: IC-F1100DT; Type: VHF Receiver; Serial: 32000201-0

Communication System: UID 10000, CW; Frequency: 174 MHz; Duty Cycle: 1:1
Medium parameters used: f = 174 MHz; σ = 0.818 S/m; ε_r = 54.228; ρ = 1000 kg/m^3 ; Phantom section: Flat Section ; Measurement Standard: DASY5 (IEEE/IEC/ANSI C63.19-2011)

DASY Configuration:

- Probe: ES3DV3 - SN3250; ConvF(7.64, 7.64, 7.64); Calibrated: 3/13/2018;
- Sensor-Surface: 3mm (Mechanical Surface Detection)
- Electronics: DAE4 Sn874; Calibrated: 8/21/2017
- Phantom: ELI 4.0; Type: QD OVA 001 BB; Serial: 1057
- DASY52 52.10.0(1446); SEMCAD X 14.6.10(7417)

Configuration Head for IC-F1100DT/Head Front, P=5W, d=25mm/Zoom Scan (7x7x7) (9x13x7)/Cube 0: Measurement grid: dx=5mm, dy=5mm, dz=5mm
Reference Value = 14.21 V/m; Power Drift = 1.37 dB
Peak SAR (extrapolated) = 0.412 W/kg
SAR(1 g) = 0.284 W/kg; SAR(10 g) = 0.213 W/kg (SAR corrected for target medium)
Maximum value of SAR (measured) = 0.317 W/kg

Configuration Head for IC-F1100DT/Head Front, P=5W, d=25mm/Area Scan (61x101x1): Interpolated grid: dx=1.500 mm, dy=1.500 mm
Maximum value of SAR (interpolated) = 0.250 W/kg

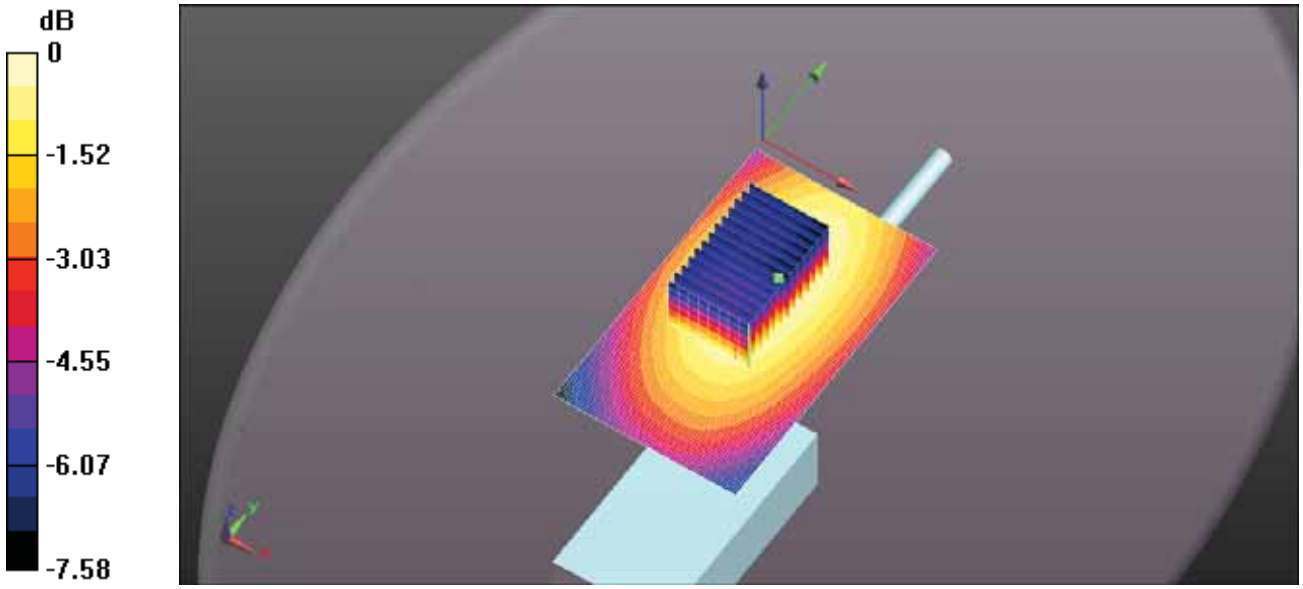

0 dB = 0.317 W/kg = -4.99 dBW/kg

Test Laboratory: Ultratech Group of Labs

FILE NAME: ICOM-489Q HEAD FA-SC61VC 151MM 136MHZ.DA52:0

DUT: IC-F1100DT; Type: VHF Receiver; Serial: 32000201-0

Communication System: UID 10000, CW; Frequency: 136 MHz; Duty Cycle: 1:1
Medium parameters used: f = 136 MHz; σ = 0.773 S/m; ε_r = 54.298; ρ = 1000 kg/m^3 ; Phantom section: Flat Section ; Measurement Standard: DASY5 (IEEE/IEC/ANSI C63.19-2011)

DASY Configuration:

- Probe: ES3DV3 - SN3250; ConvF(7.64, 7.64, 7.64); Calibrated: 3/13/2018;
- Sensor-Surface: 3mm (Mechanical Surface Detection)
- Electronics: DAE4 Sn874; Calibrated: 8/21/2017
- Phantom: ELI 4.0; Type: QD OVA 001 BB; Serial: 1057
- DASY52 52.10.0(1446); SEMCAD X 14.6.10(7417)

Configuration Head for IC-F1100DT/Head Front, P=5W, d=25mm/Zoom Scan (7x7x7) (7x7x7)/Cube 0: Measurement grid: dx=5mm, dy=5mm, dz=5mm
Reference Value = 12.43 V/m; Power Drift = 1.11 dB
Peak SAR (extrapolated) = 0.250 W/kg
SAR(1 g) = 0.175 W/kg; SAR(10 g) = 0.133 W/kg (SAR corrected for target medium)
Maximum value of SAR (measured) = 0.194 W/kg

Configuration Head for IC-F1100DT/Head Front, P=5W, d=25mm/Area Scan (61x101x1): Interpolated grid: dx=1.500 mm, dy=1.500 mm
Maximum value of SAR (interpolated) = 0.164 W/kg

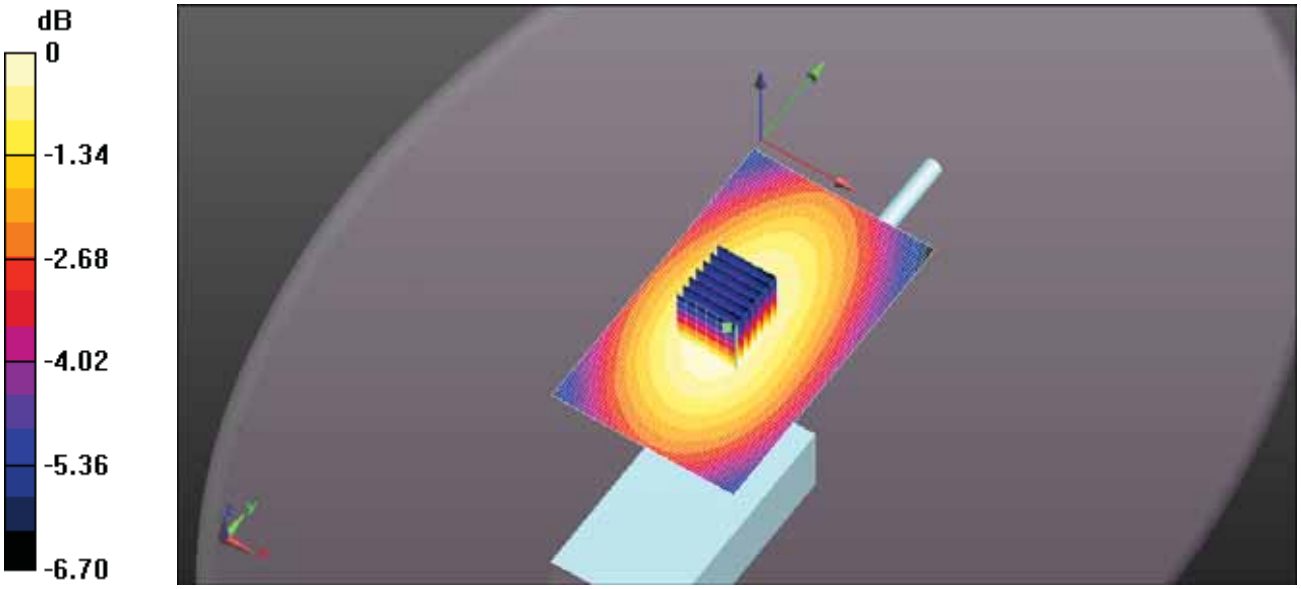

0 dB = 0.194 W/kg = -7.11 dBW/kg

Test Laboratory: Ultratech Group of Labs

FILE NAME: ICOM-489Q HEAD FA-SC61VC 151MM 142.3MHZ.DA52:0

DUT: IC-F1100DT; Type: VHF Receiver; Serial: 32000201-0

Communication System: UID 10000, CW; Frequency: 142.3 MHz; Duty Cycle: 1:1
Medium parameters used (interpolated): f = 142.3 MHz; σ = 0.78 S/m; ε_r = 54.488; ρ = 1000 kg/m^3 ;
Phantom section: Flat Section ; Measurement Standard: DASY5 (IEEE/IEC/ANSI C63.19-2011)

DASY Configuration:

- Probe: ES3DV3 - SN3250; ConvF(7.64, 7.64, 7.64); Calibrated: 3/13/2018;
- Sensor-Surface: 3mm (Mechanical Surface Detection)
- Electronics: DAE4 Sn874; Calibrated: 8/21/2017
- Phantom: ELI 4.0; Type: QD OVA 001 BB; Serial: 1057
- DASY52 52.10.0(1446); SEMCAD X 14.6.10(7417)

Configuration Head for IC-F1100DT/Head Front, P=5W, d=25mm/Zoom Scan (7x7x7) (7x7x7)/Cube 0: Measurement grid: dx=5mm, dy=5mm, dz=5mm
Reference Value = 16.08 V/m; Power Drift = -0.43 dB
Peak SAR (extrapolated) = 0.316 W/kg
SAR(1 g) = 0.222 W/kg; SAR(10 g) = 0.169 W/kg (SAR corrected for target medium)
Maximum value of SAR (measured) = 0.247 W/kg
Configuration Head for IC-F1100DT/Head Front, P=5W, d=25mm/Area Scan (61x101x1): Interpolated grid: dx=1.500 mm, dy=1.500 mm
Maximum value of SAR (interpolated) = 0.251 W/kg

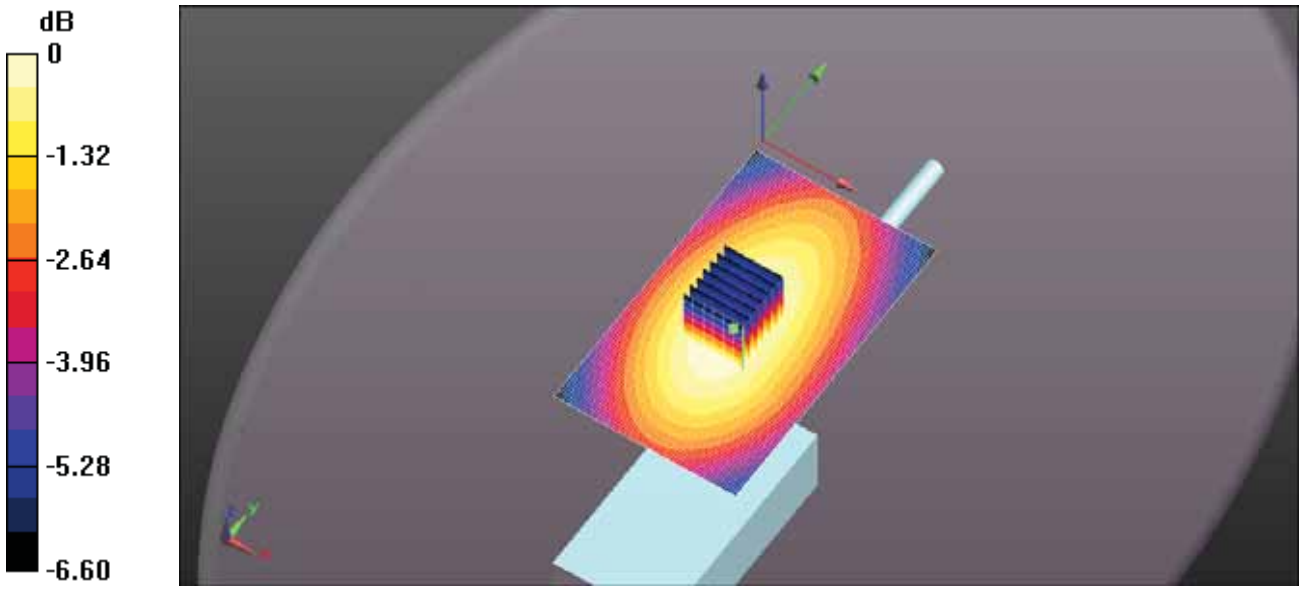

0 dB = 0.247 W/kg = -6.08 dBW/kg

Test Laboratory: Ultratech Group of Labs

FILE NAME: ICOM-489Q HEAD FA-SC61VC 151MM 148.7MHZ.DA52:0

DUT: IC-F1100DT; Type: VHF Receiver; Serial: 32000201-0

Communication System: UID 10000, CW; Frequency: 148.7 MHz; Duty Cycle: 1:1
Medium parameters used (interpolated): f = 148.7 MHz; σ = 0.787 S/m; ε_r = 54.353; ρ = 1000 kg/m^3 ;
Phantom section: Flat Section ; Measurement Standard: DASY5 (IEEE/IEC/ANSI C63.19-2011)

DASY Configuration:

- Probe: ES3DV3 - SN3250; ConvF(7.64, 7.64, 7.64); Calibrated: 3/13/2018;
- Sensor-Surface: 3mm (Mechanical Surface Detection)
- Electronics: DAE4 Sn874; Calibrated: 8/21/2017
- Phantom: ELI 4.0; Type: QD OVA 001 BB; Serial: 1057
- DASY52 52.10.0(1446); SEMCAD X 14.6.10(7417)

Configuration Head for IC-F1100DT/Head Front, P=5W, d=25mm/Zoom Scan (7x7x7) (7x7x7)/Cube 0: Measurement grid: dx=5mm, dy=5mm, dz=5mm
Reference Value = 19.47 V/m; Power Drift = -0.56 dB
Peak SAR (extrapolated) = 0.452 W/kg
SAR(1 g) = 0.317 W/kg; SAR(10 g) = 0.241 W/kg (SAR corrected for target medium)
Maximum value of SAR (measured) = 0.352 W/kg
Configuration Head for IC-F1100DT/Head Front, P=5W, d=25mm/Area Scan (61x101x1): Interpolated grid: dx=1.500 mm, dy=1.500 mm
Maximum value of SAR (interpolated) = 0.364 W/kg

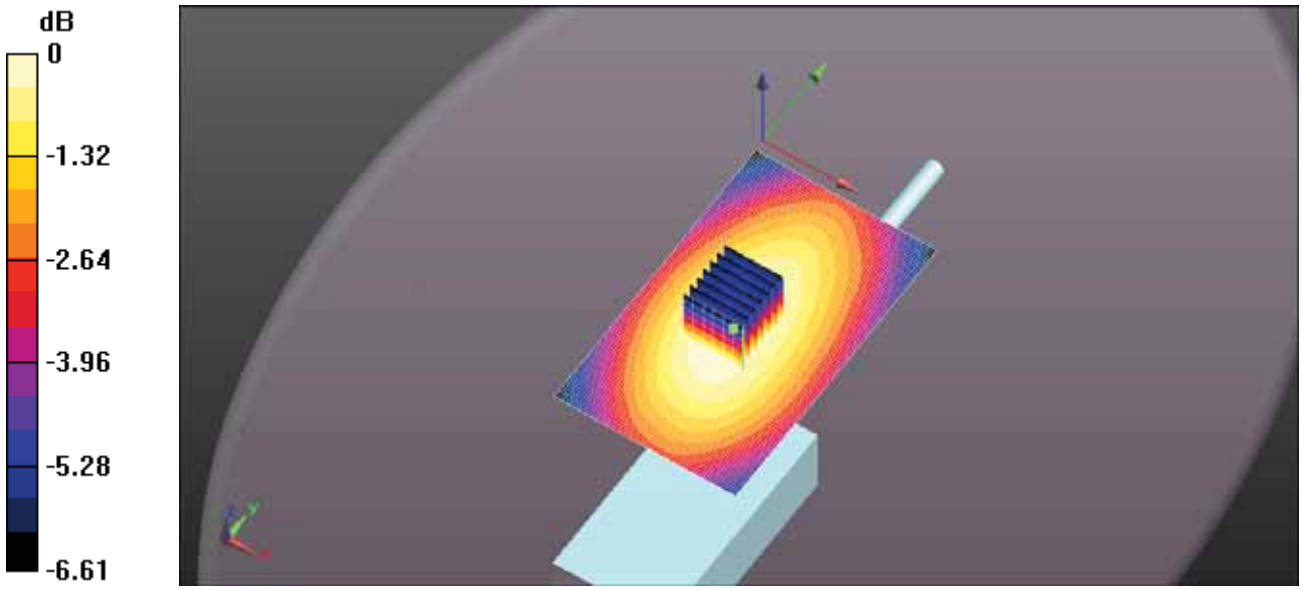

0 dB = 0.352 W/kg = -4.53 dBW/kg

Test Laboratory: Ultratech Group of Labs

FILE NAME: ICOM-489Q HEAD FA-SC61VC 151MM 155MHZ.DA52:0

DUT: IC-F1100DT; Type: VHF Receiver; Serial: 32000201-0

Communication System: UID 10000, CW; Frequency: 155 MHz; Duty Cycle: 1:1
Medium parameters used (interpolated): f = 155 MHz; σ = 0.795 S/m; ε_r = 54.309; ρ = 1000 kg/m^3 ;
Phantom section: Flat Section ; Measurement Standard: DASY5 (IEEE/IEC/ANSI C63.19-2011)

DASY Configuration:

- Probe: ES3DV3 - SN3250; ConvF(7.64, 7.64, 7.64); Calibrated: 3/13/2018;
- Sensor-Surface: 3mm (Mechanical Surface Detection)
- Electronics: DAE4 Sn874; Calibrated: 8/21/2017
- Phantom: ELI 4.0; Type: QD OVA 001 BB; Serial: 1057
- DASY52 52.10.0(1446); SEMCAD X 14.6.10(7417)

Configuration Head for IC-F1100DT/Head Front, P=5W, d=25mm/Zoom Scan (7x7x7) (7x7x7)/Cube 0: Measurement grid: dx=5mm, dy=5mm, dz=5mm
Reference Value = 24.93 V/m; Power Drift = -0.10 dB
Peak SAR (extrapolated) = 0.840 W/kg
SAR(1 g) = 0.587 W/kg; SAR(10 g) = 0.445 W/kg (SAR corrected for target medium)
Maximum value of SAR (measured) = 0.652 W/kg
Configuration Head for IC-F1100DT/Head Front, P=5W, d=25mm/Area Scan (61x101x1): Interpolated grid: dx=1.500 mm, dy=1.500 mm
Maximum value of SAR (interpolated) = 0.643 W/kg

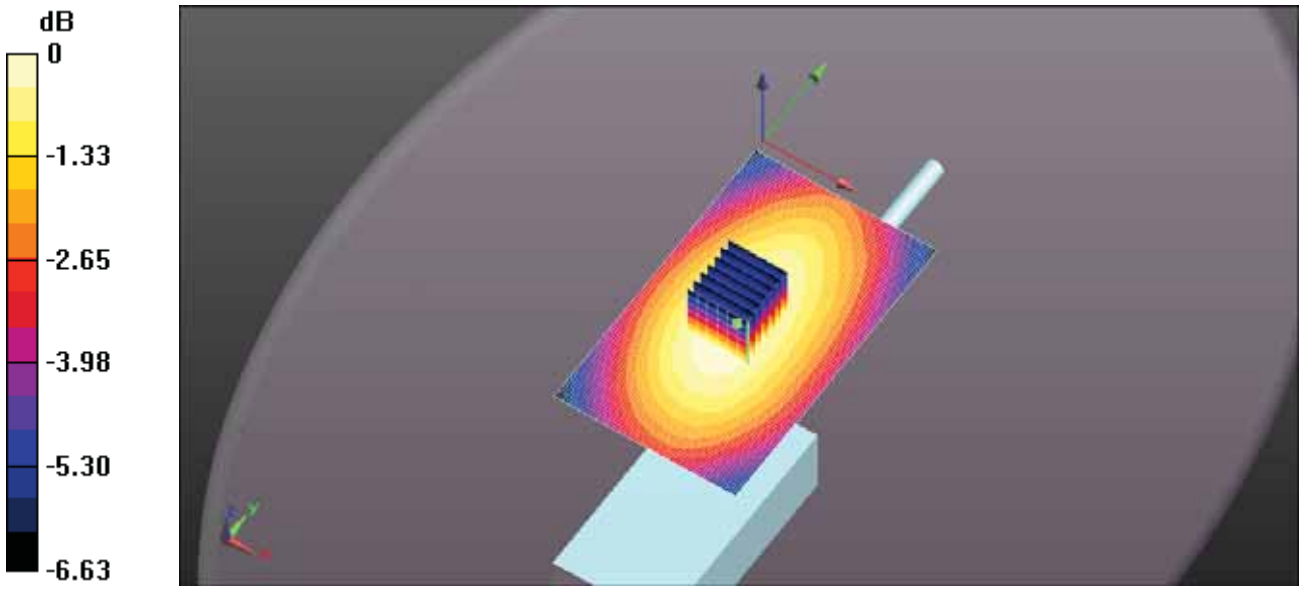

0 dB = 0.652 W/kg = -1.86 dBW/kg

Test Laboratory: Ultratech Group of Labs

FILE NAME: ICOM-489Q HEAD FA-SC61VC 151MM 161.3MHZ.DA52:0

DUT: IC-F1100DT; Type: VHF Receiver; Serial: 32000201-0

Communication System: UID 10000, CW; Frequency: 161.3 MHz; Duty Cycle: 1:1
Medium parameters used: f = 162 MHz; σ = 0.803 S/m; ε_r = 54.448; ρ = 1000 kg/m^3 ; Phantom section: Flat Section ; Measurement Standard: DASY5 (IEEE/IEC/ANSI C63.19-2011)

DASY Configuration:

- Probe: ES3DV3 - SN3250; ConvF(7.64, 7.64, 7.64); Calibrated: 3/13/2018;
- Sensor-Surface: 3mm (Mechanical Surface Detection)
- Electronics: DAE4 Sn874; Calibrated: 8/21/2017
- Phantom: ELI 4.0; Type: QD OVA 001 BB; Serial: 1057
- DASY52 52.10.0(1446); SEMCAD X 14.6.10(7417)

Configuration Head for IC-F1100DT/Head Front, P=5W, d=25mm/Zoom Scan (7x7x7) (7x7x7)/Cube 0: Measurement grid: dx=5mm, dy=5mm, dz=5mm
Reference Value = 32.37 V/m; Power Drift = 0.19 dB
Peak SAR (extrapolated) = 1.55 W/kg
SAR(1 g) = 1.07 W/kg; SAR(10 g) = 0.808 W/kg (SAR corrected for target medium)
Maximum value of SAR (measured) = 1.20 W/kg

Configuration Head for IC-F1100DT/Head Front, P=5W, d=25mm/Area Scan (61x101x1): Interpolated grid: dx=1.500 mm, dy=1.500 mm
Maximum value of SAR (interpolated) = 1.13 W/kg

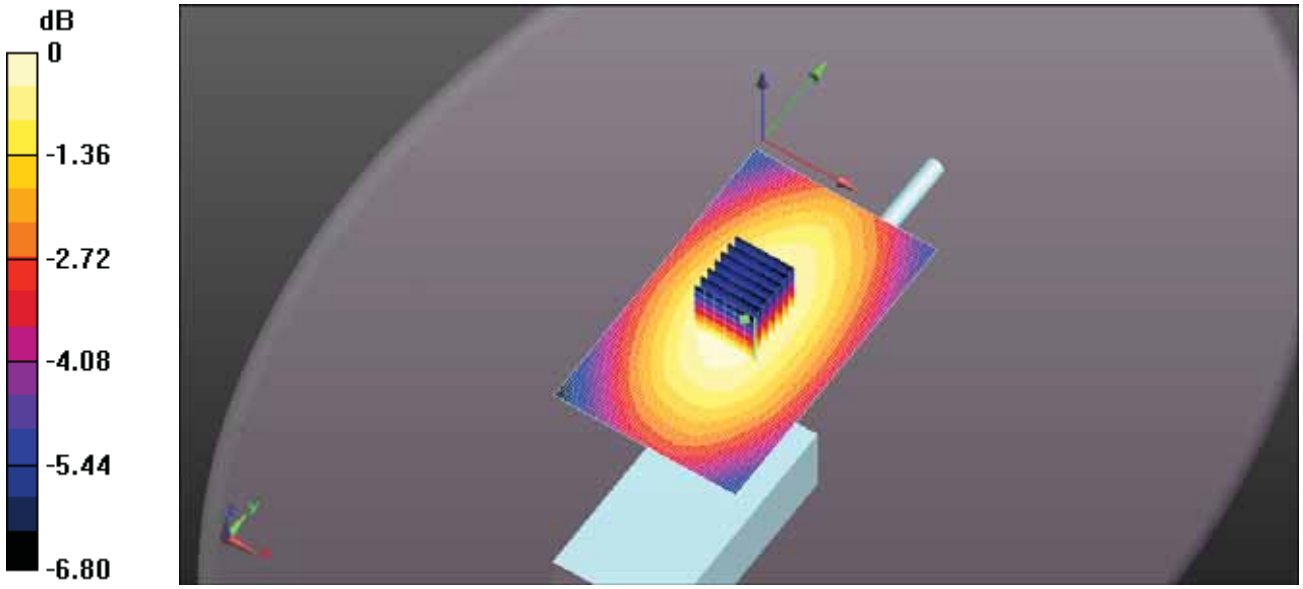

0 dB = 1.20 W/kg = 0.79 dBW/kg

Test Laboratory: Ultratech Group of Labs

FILE NAME: ICOM-489Q HEAD FA-SC61VC 151MM 167.7MHZ.DA52:0

DUT: IC-F1100DT; Type: VHF Receiver; Serial: 32000201-0

Communication System: UID 10000, CW; Frequency: 167.7 MHz; Duty Cycle: 1:1
Medium parameters used: f = 168 MHz; σ = 0.81 S/m; ε_r = 54.329; ρ = 1000 kg/m^3 ; Phantom section: Flat Section ; Measurement Standard: DASY5 (IEEE/IEC/ANSI C63.19-2011)

DASY Configuration:

- Probe: ES3DV3 - SN3250; ConvF(7.64, 7.64, 7.64); Calibrated: 3/13/2018;
- Sensor-Surface: 3mm (Mechanical Surface Detection)
- Electronics: DAE4 Sn874; Calibrated: 8/21/2017
- Phantom: ELI 4.0; Type: QD OVA 001 BB; Serial: 1057
- DASY52 52.10.0(1446); SEMCAD X 14.6.10(7417)

Configuration Head for IC-F1100DT/Head Front, P=5W, d=25mm/Zoom Scan (7x7x7) (7x7x7)/Cube 0: Measurement grid: dx=5mm, dy=5mm, dz=5mm
Reference Value = 52.49 V/m; Power Drift = -0.29 dB
Peak SAR (extrapolated) = 3.97 W/kg
SAR(1 g) = 2.76 W/kg; SAR(10 g) = 2.07 W/kg (SAR corrected for target medium)
Maximum value of SAR (measured) = 3.08 W/kg

Configuration Head for IC-F1100DT/Head Front, P=5W, d=25mm/Area Scan (61x101x1): Interpolated grid: dx=1.500 mm, dy=1.500 mm
Maximum value of SAR (interpolated) = 3.14 W/kg

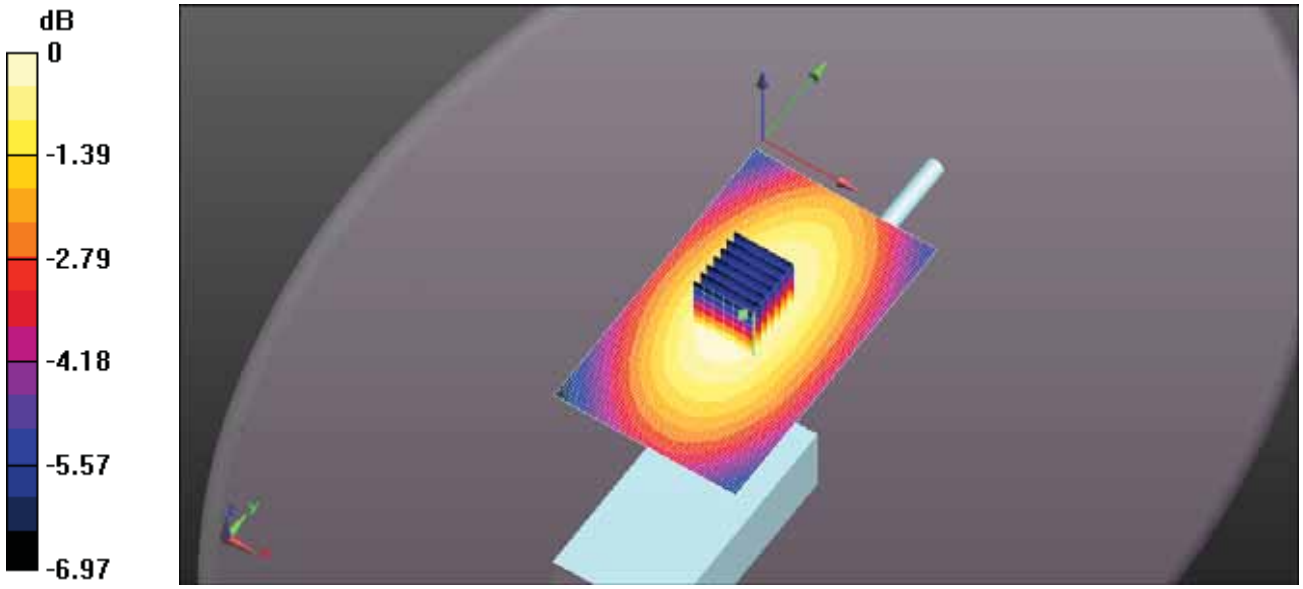

0 dB = 3.08 W/kg = 4.89 dBW/kg

Test Laboratory: Ultratech Group of Labs

FILE NAME: ICOM-489Q HEAD FA-SC61VC 151MM 174MHZ.DA52:0

DUT: IC-F1100DT; Type: VHF Receiver; Serial: 32000201-0

Communication System: UID 10000, CW; Frequency: 174 MHz; Duty Cycle: 1:1
Medium parameters used: f = 174 MHz; σ = 0.818 S/m; ε_r = 54.228; ρ = 1000 kg/m^3 ; Phantom section: Flat Section ; Measurement Standard: DASY5 (IEEE/IEC/ANSI C63.19-2011)

DASY Configuration:

- Probe: ES3DV3 - SN3250; ConvF(7.64, 7.64, 7.64); Calibrated: 3/13/2018;
- Sensor-Surface: 3mm (Mechanical Surface Detection)
- Electronics: DAE4 Sn874; Calibrated: 8/21/2017
- Phantom: ELI 4.0; Type: QD OVA 001 BB; Serial: 1057
- DASY52 52.10.0(1446); SEMCAD X 14.6.10(7417)

Configuration Head for IC-F1100DT/Head Front, P=5W, d=25mm/Zoom Scan (7x7x7) (7x7x7)/Cube 0: Measurement grid: dx=5mm, dy=5mm, dz=5mm
Reference Value = 42.32 V/m; Power Drift = -0.39 dB
Peak SAR (extrapolated) = 2.50 W/kg
SAR(1 g) = 1.73 W/kg; SAR(10 g) = 1.29 W/kg (SAR corrected for target medium)
Maximum value of SAR (measured) = 1.93 W/kg

Configuration Head for IC-F1100DT/Head Front, P=5W, d=25mm/Area Scan (61x101x1): Interpolated grid: dx=1.500 mm, dy=1.500 mm
Maximum value of SAR (interpolated) = 1.98 W/kg

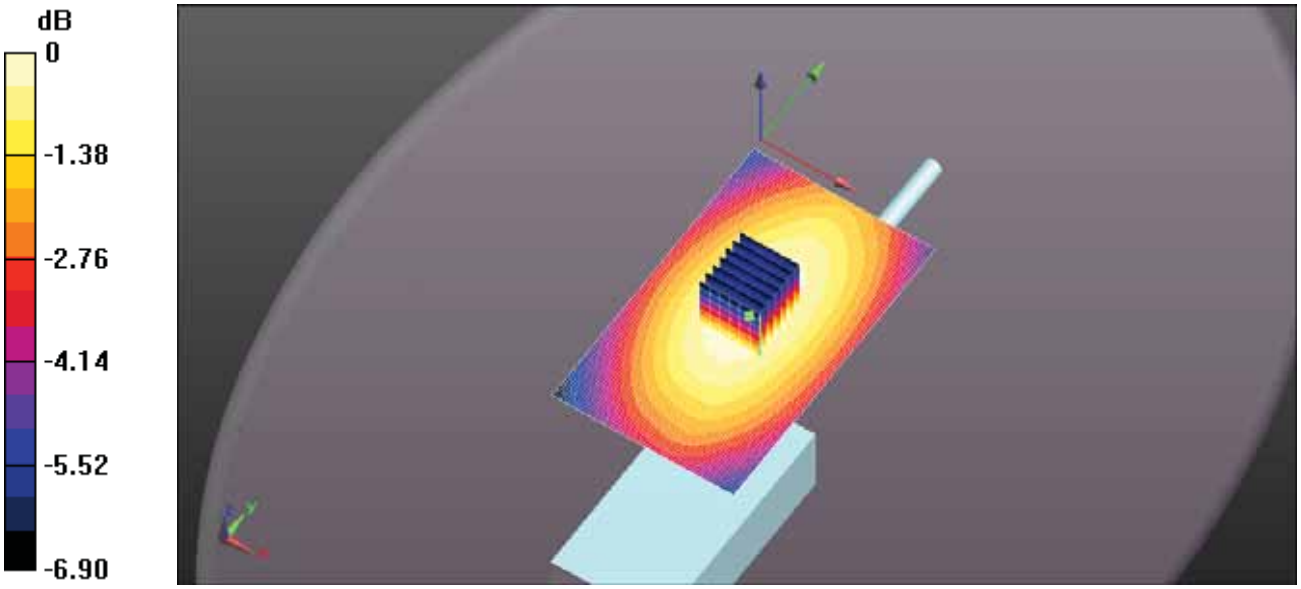

0 dB = 1.93 W/kg = 2.85 dBW/kg

Test Laboratory: Ultratech Group of Labs

FILE NAME: ICOM-489Q HEAD FA-SC61VC 146MM 136MHZ.DA52:0

DUT: IC-F1100DT; Type: VHF Receiver; Serial: 32000201-0

Communication System: UID 10000, CW; Frequency: 136 MHz; Duty Cycle: 1:1
Medium parameters used: f = 136 MHz; σ = 0.773 S/m; ε_r = 54.298; ρ = 1000 kg/m^3 ; Phantom section: Flat Section ; Measurement Standard: DASY5 (IEEE/IEC/ANSI C63.19-2011)

DASY Configuration:

- Probe: ES3DV3 - SN3250; ConvF(7.64, 7.64, 7.64); Calibrated: 3/13/2018;
- Sensor-Surface: 3mm (Mechanical Surface Detection)
- Electronics: DAE4 Sn874; Calibrated: 8/21/2017
- Phantom: ELI 4.0; Type: QD OVA 001 BB; Serial: 1057
- DASY52 52.10.0(1446); SEMCAD X 14.6.10(7417)

Configuration Head for IC-F1100DT/Head Front, P=5W, d=25mm/Zoom Scan (7x7x7) (7x7x7)/Cube 0: Measurement grid: dx=5mm, dy=5mm, dz=5mm
Reference Value = 12.45 V/m; Power Drift = 1.08 dB
Peak SAR (extrapolated) = 0.253 W/kg
SAR(1 g) = 0.175 W/kg; SAR(10 g) = 0.132 W/kg (SAR corrected for target medium)
Maximum value of SAR (measured) = 0.196 W/kg

Configuration Head for IC-F1100DT/Head Front, P=5W, d=25mm/Area Scan (61x101x1): Interpolated grid: dx=1.500 mm, dy=1.500 mm
Maximum value of SAR (interpolated) = 0.169 W/kg

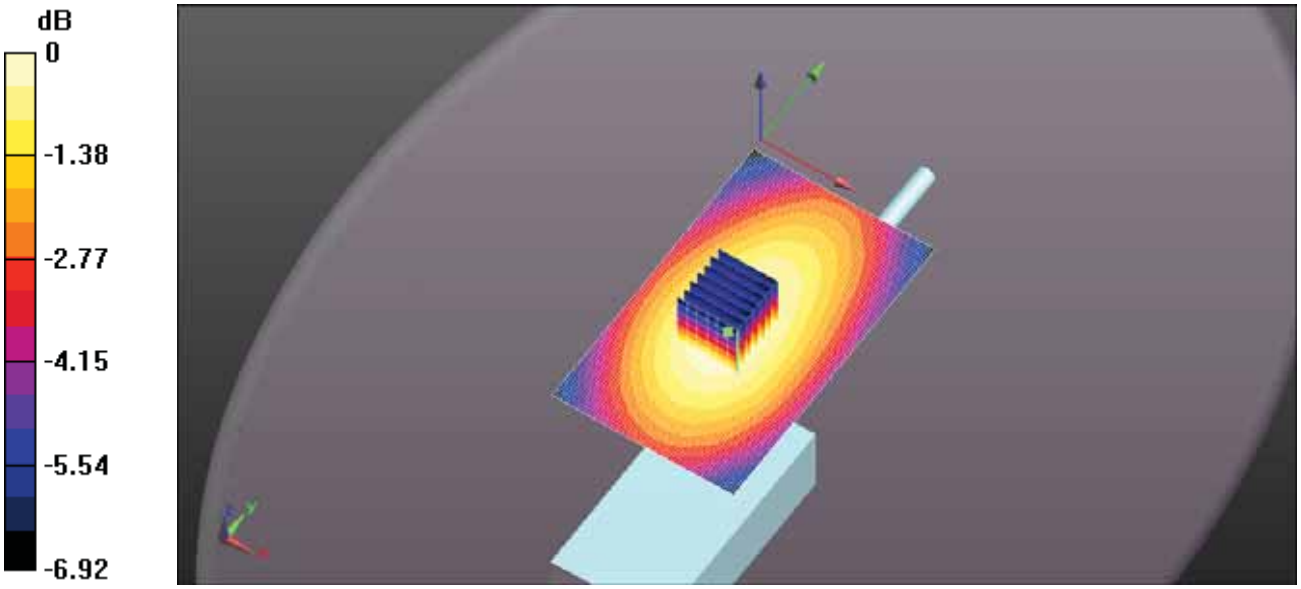

0 dB = 0.196 W/kg = -7.09 dBW/kg

Test Laboratory: Ultratech Group of Labs

FILE NAME: ICOM-489Q HEAD FA-SC61VC 146MM 142.3MHZ.DA52:0

DUT: IC-F1100DT; Type: VHF Receiver; Serial: 32000201-0

Communication System: UID 10000, CW; Frequency: 142.3 MHz; Duty Cycle: 1:1
Medium parameters used (interpolated): f = 142.3 MHz; σ = 0.78 S/m; ε_r = 54.488; ρ = 1000 kg/m^3 ;
Phantom section: Flat Section ; Measurement Standard: DASY5 (IEEE/IEC/ANSI C63.19-2011)

DASY Configuration:

- Probe: ES3DV3 - SN3250; ConvF(7.64, 7.64, 7.64); Calibrated: 3/13/2018;
- Sensor-Surface: 3mm (Mechanical Surface Detection)
- Electronics: DAE4 Sn874; Calibrated: 8/21/2017
- Phantom: ELI 4.0; Type: QD OVA 001 BB; Serial: 1057
- DASY52 52.10.0(1446); SEMCAD X 14.6.10(7417)

Configuration Head for IC-F1100DT/Head Front, P=5W, d=25mm/Zoom Scan (7x7x7) (7x7x7)/Cube 0: Measurement grid: dx=5mm, dy=5mm, dz=5mm
Reference Value = 17.11 V/m; Power Drift = -0.59 dB
Peak SAR (extrapolated) = 0.344 W/kg
SAR(1 g) = 0.239 W/kg; SAR(10 g) = 0.181 W/kg (SAR corrected for target medium)
Maximum value of SAR (measured) = 0.267 W/kg
Configuration Head for IC-F1100DT/Head Front, P=5W, d=25mm/Area Scan (61x101x1): Interpolated grid: dx=1.500 mm, dy=1.500 mm
Maximum value of SAR (interpolated) = 0.282 W/kg

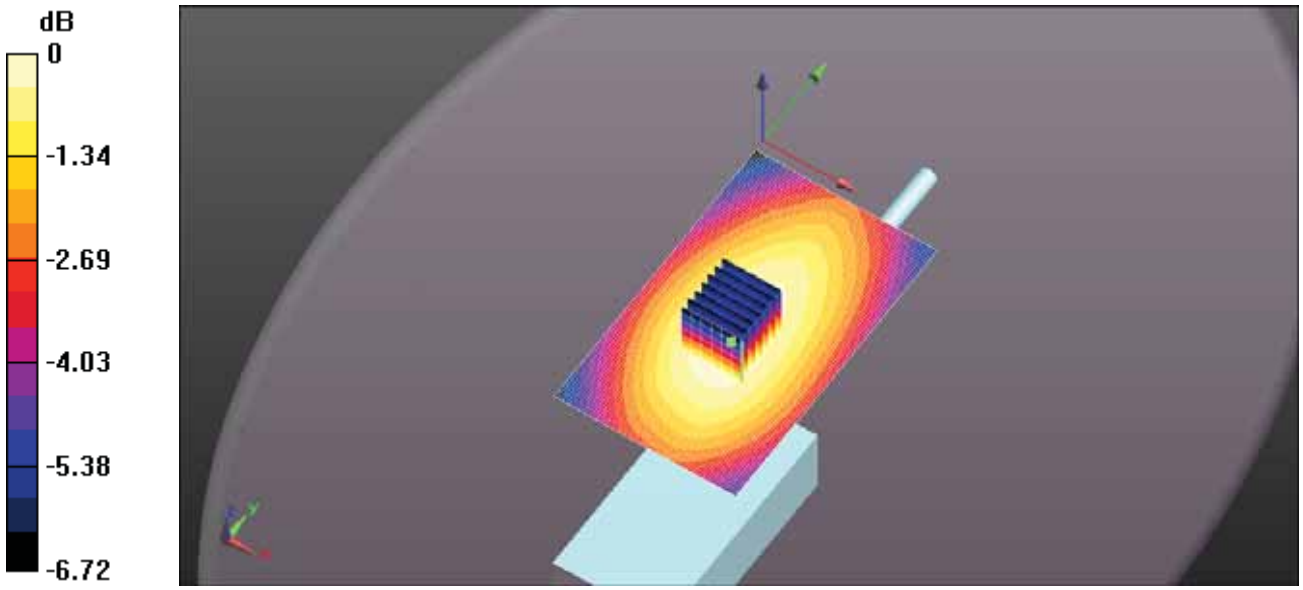

0 dB = 0.267 W/kg = -5.74 dBW/kg

Test Laboratory: Ultratech Group of Labs

FILE NAME: ICOM-489Q HEAD FA-SC61VC 146MM 148.7MHZ.DA52:0

DUT: IC-F1100DT; Type: VHF Receiver; Serial: 32000201-0

Communication System: UID 10000, CW; Frequency: 148.7 MHz; Duty Cycle: 1:1
Medium parameters used (interpolated): f = 148.7 MHz; σ = 0.787 S/m; ε_r = 54.353; ρ = 1000 kg/m^3 ;
Phantom section: Flat Section ; Measurement Standard: DASY5 (IEEE/IEC/ANSI C63.19-2011)

DASY Configuration:

- Probe: ES3DV3 - SN3250; ConvF(7.64, 7.64, 7.64); Calibrated: 3/13/2018;
- Sensor-Surface: 3mm (Mechanical Surface Detection)
- Electronics: DAE4 Sn874; Calibrated: 8/21/2017
- Phantom: ELI 4.0; Type: QD OVA 001 BB; Serial: 1057
- DASY52 52.10.0(1446); SEMCAD X 14.6.10(7417)

Configuration Head for IC-F1100DT/Head Front, P=5W, d=25mm/Zoom Scan (7x7x7) (7x7x7)/Cube 0: Measurement grid: dx=5mm, dy=5mm, dz=5mm
Reference Value = 20.33 V/m; Power Drift = -0.81 dB
Peak SAR (extrapolated) = 0.477 W/kg
SAR(1 g) = 0.331 W/kg; SAR(10 g) = 0.250 W/kg (SAR corrected for target medium)
Maximum value of SAR (measured) = 0.369 W/kg
Configuration Head for IC-F1100DT/Head Front, P=5W, d=25mm/Area Scan (61x101x1): Interpolated grid: dx=1.500 mm, dy=1.500 mm
Maximum value of SAR (interpolated) = 0.396 W/kg

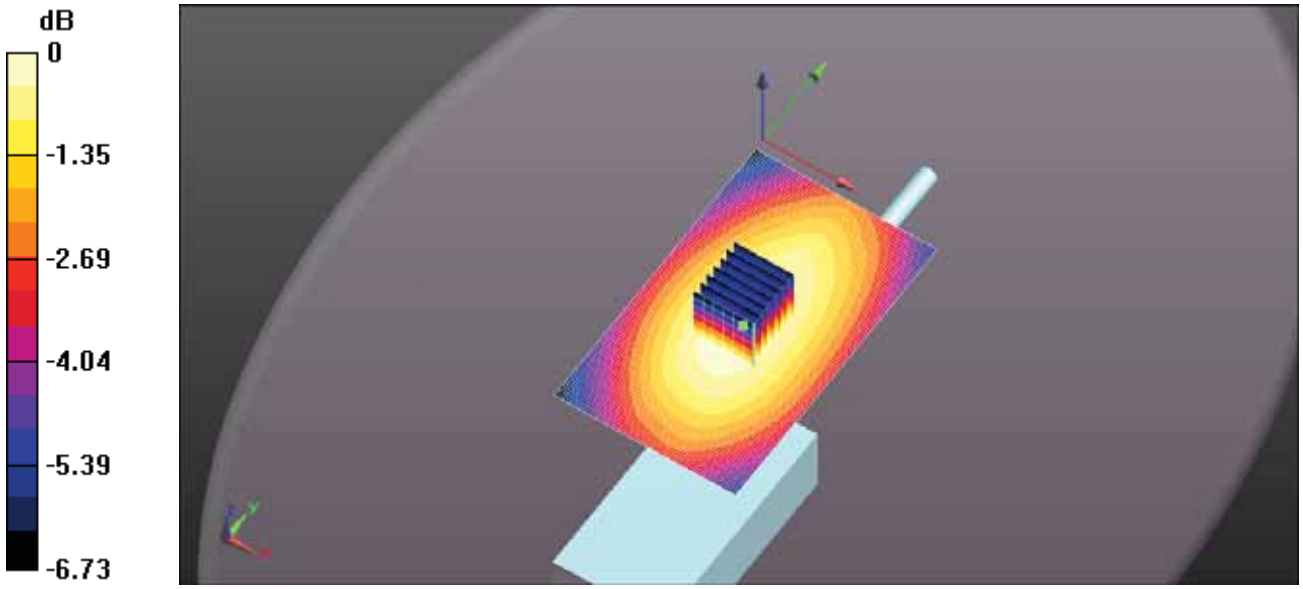

0 dB = 0.369 W/kg = -4.33 dBW/kg

Test Laboratory: Ultratech Group of Labs

FILE NAME: ***ICOM-489Q HEAD FA-SC61VC 146MM 155MHZ.DA52:0***

DUT: IC-F1100DT; Type: VHF Receiver; Serial: 32000201-0

Communication System: UID 10000, CW; Frequency: 155 MHz; Duty Cycle: 1:1
Medium parameters used (interpolated): f = 155 MHz; σ = 0.795 S/m; ε_r = 54.309; ρ = 1000 kg/m^3 ;
Phantom section: Flat Section ; Measurement Standard: DASY5 (IEEE/IEC/ANSI C63.19-2011)

DASY Configuration:

- Probe: ES3DV3 - SN3250; ConvF(7.64, 7.64, 7.64); Calibrated: 3/13/2018;
- Sensor-Surface: 3mm (Mechanical Surface Detection)
- Electronics: DAE4 Sn874; Calibrated: 8/21/2017
- Phantom: ELI 4.0; Type: QD OVA 001 BB; Serial: 1057
- DASY52 52.10.0(1446); SEMCAD X 14.6.10(7417)

Configuration Head for IC-F1100DT/Head Front, P=5W, d=25mm/Zoom Scan (7x7x7) (7x7x7)/Cube 0: Measurement grid: dx=5mm, dy=5mm, dz=5mm
Reference Value = 26.70 V/m; Power Drift = -0.46 dB
Peak SAR (extrapolated) = 0.869 W/kg
SAR(1 g) = 0.603 W/kg; SAR(10 g) = 0.458 W/kg (SAR corrected for target medium)
Maximum value of SAR (measured) = 0.675 W/kg
Configuration Head for IC-F1100DT/Head Front, P=5W, d=25mm/Area Scan (61x101x1): Interpolated grid: dx=1.500 mm, dy=1.500 mm
Maximum value of SAR (interpolated) = 0.676 W/kg

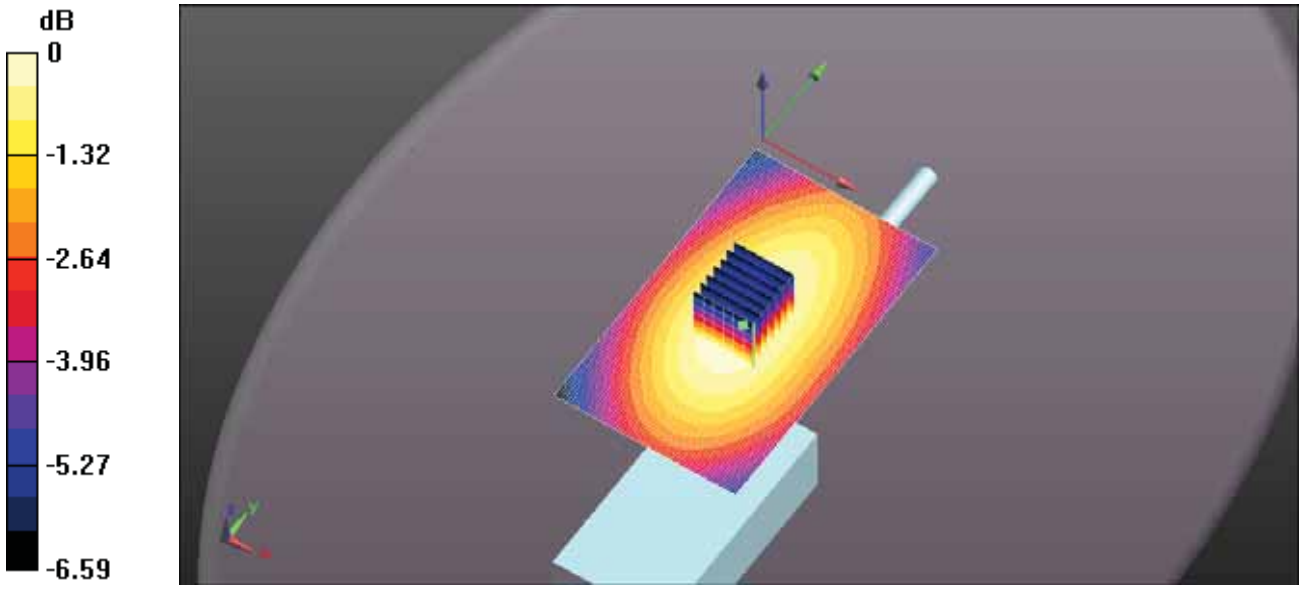

0 dB = 0.675 W/kg = -1.71 dBW/kg

Test Laboratory: Ultratech Group of Labs

FILE NAME: ***ICOM-489Q HEAD FA-SC61VC 146MM 161.3MHZ.DA52:0***

DUT: IC-F1100DT; Type: VHF Receiver; Serial: 32000201-0

Communication System: UID 10000, CW; Frequency: 161.3 MHz; Duty Cycle: 1:1
Medium parameters used: f = 162 MHz; σ = 0.803 S/m; ε_r = 54.448; ρ = 1000 kg/m^3 ; Phantom section: Flat Section ; Measurement Standard: DASY5 (IEEE/IEC/ANSI C63.19-2011)

DASY Configuration:

- Probe: ES3DV3 - SN3250; ConvF(7.64, 7.64, 7.64); Calibrated: 3/13/2018;
- Sensor-Surface: 3mm (Mechanical Surface Detection)
- Electronics: DAE4 Sn874; Calibrated: 8/21/2017
- Phantom: ELI 4.0; Type: QD OVA 001 BB; Serial: 1057
- DASY52 52.10.0(1446); SEMCAD X 14.6.10(7417)

Configuration Head for IC-F1100DT/Head Front, P=5W, d=25mm/Zoom Scan (7x7x7) (7x7x7)/Cube 0: Measurement grid: dx=5mm, dy=5mm, dz=5mm
Reference Value = 32.17 V/m; Power Drift = -0.30 dB
Peak SAR (extrapolated) = 1.38 W/kg
SAR(1 g) = 0.964 W/kg; SAR(10 g) = 0.730 W/kg (SAR corrected for target medium)
Maximum value of SAR (measured) = 1.08 W/kg
Configuration Head for IC-F1100DT/Head Front, P=5W, d=25mm/Area Scan (61x101x1): Interpolated grid: dx=1.500 mm, dy=1.500 mm
Maximum value of SAR (interpolated) = 1.09 W/kg

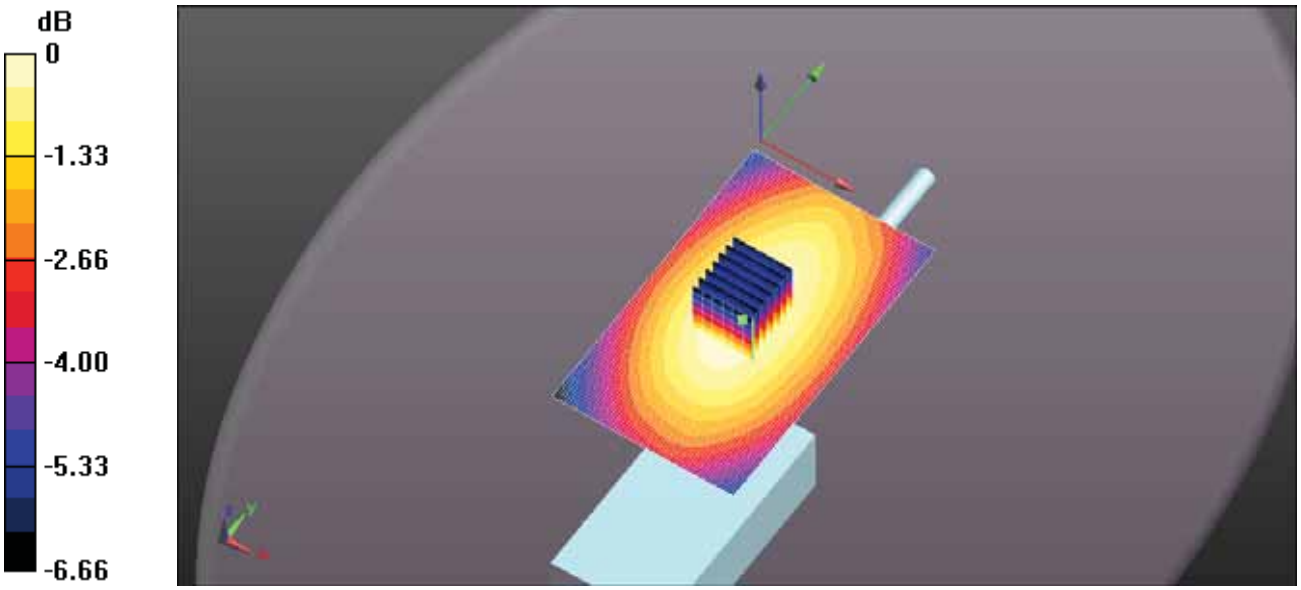

0 dB = 1.08 W/kg = 0.31 dBW/kg

Test Laboratory: Ultratech Group of Labs

FILE NAME: ICOM-489Q HEAD FA-SC61VC 146MM 167.7MHZ.DA52:0

DUT: IC-F1100DT; Type: VHF Receiver; Serial: 32000201-0

Communication System: UID 10000, CW; Frequency: 167.7 MHz; Duty Cycle: 1:1
Medium parameters used: f = 168 MHz; σ = 0.81 S/m; ε_r = 54.329; ρ = 1000 kg/m^3 ; Phantom section: Flat Section ; Measurement Standard: DASY5 (IEEE/IEC/ANSI C63.19-2011)

DASY Configuration:

- Probe: ES3DV3 - SN3250; ConvF(7.64, 7.64, 7.64); Calibrated: 3/13/2018;
- Sensor-Surface: 3mm (Mechanical Surface Detection)
- Electronics: DAE4 Sn874; Calibrated: 8/21/2017
- Phantom: ELI 4.0; Type: QD OVA 001 BB; Serial: 1057
- DASY52 52.10.0(1446); SEMCAD X 14.6.10(7417)

Configuration Head for IC-F1100DT/Head Front, P=5W, d=25mm/Zoom Scan (7x7x7) (7x7x7)/Cube 0: Measurement grid: dx=5mm, dy=5mm, dz=5mm
Reference Value = 40.51 V/m; Power Drift = -0.41 dB
Peak SAR (extrapolated) = 2.17 W/kg
SAR(1 g) = 1.51 W/kg; SAR(10 g) = 1.14 W/kg (SAR corrected for target medium)
Maximum value of SAR (measured) = 1.68 W/kg

Configuration Head for IC-F1100DT/Head Front, P=5W, d=25mm/Area Scan (61x101x1): Interpolated grid: dx=1.500 mm, dy=1.500 mm
Maximum value of SAR (interpolated) = 1.71 W/kg

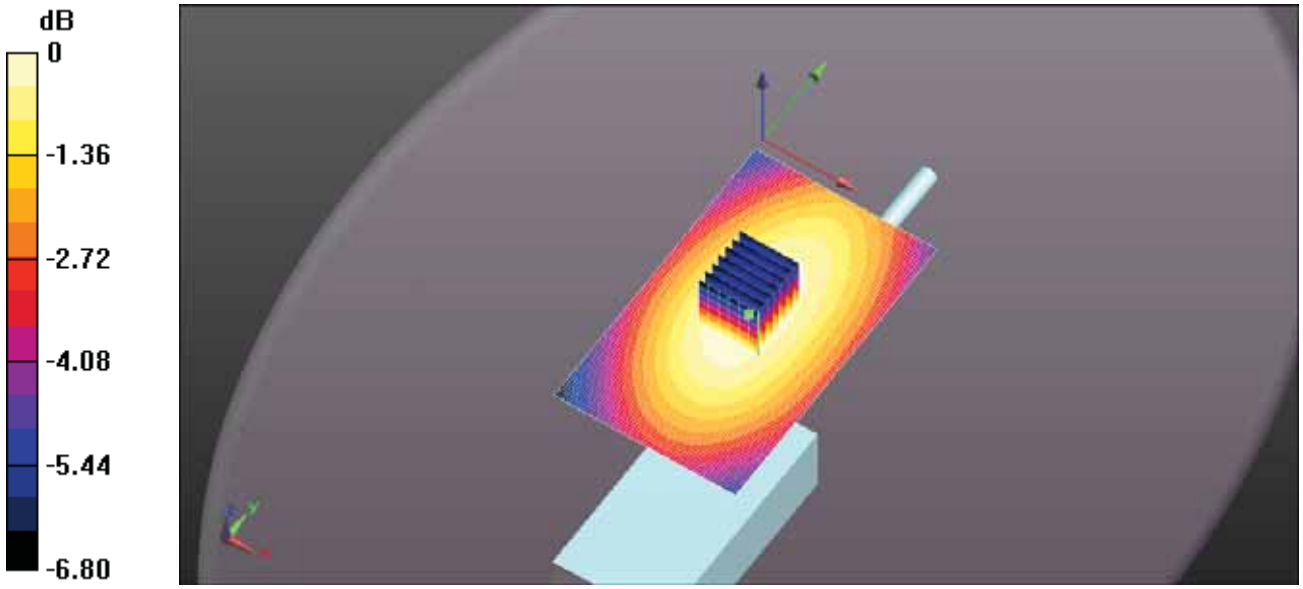

0 dB = 1.68 W/kg = 2.27 dBW/kg

Test Laboratory: Ultratech Group of Labs

FILE NAME: ICOM-489Q HEAD FA-SC61VC 146MM 174MHZ.DA52:0

DUT: IC-F1100DT; Type: VHF Receiver; Serial: 32000201-0

Communication System: UID 10000, CW; Frequency: 174 MHz; Duty Cycle: 1:1
Medium parameters used: f = 174 MHz; σ = 0.818 S/m; ε_r = 54.228; ρ = 1000 kg/m^3 ; Phantom section: Flat Section ; Measurement Standard: DASY5 (IEEE/IEC/ANSI C63.19-2011)

DASY Configuration:

- Probe: ES3DV3 - SN3250; ConvF(7.64, 7.64, 7.64); Calibrated: 3/13/2018;
- Sensor-Surface: 3mm (Mechanical Surface Detection)
- Electronics: DAE4 Sn874; Calibrated: 8/21/2017
- Phantom: ELI 4.0; Type: QD OVA 001 BB; Serial: 1057
- DASY52 52.10.0(1446); SEMCAD X 14.6.10(7417)

Configuration Head for IC-F1100DT/Head Front, P=5W, d=25mm/Zoom Scan (7x7x7) (7x7x7)/Cube 0: Measurement grid: dx=5mm, dy=5mm, dz=5mm
Reference Value = 27.15 V/m; Power Drift = -0.16 dB
Peak SAR (extrapolated) = 1.09 W/kg
SAR(1 g) = 0.765 W/kg; SAR(10 g) = 0.578 W/kg (SAR corrected for target medium)
Maximum value of SAR (measured) = 0.851 W/kg

Configuration Head for IC-F1100DT/Head Front, P=5W, d=25mm/Area Scan (61x101x1): Interpolated grid: dx=1.500 mm, dy=1.500 mm
Maximum value of SAR (interpolated) = 0.826 W/kg

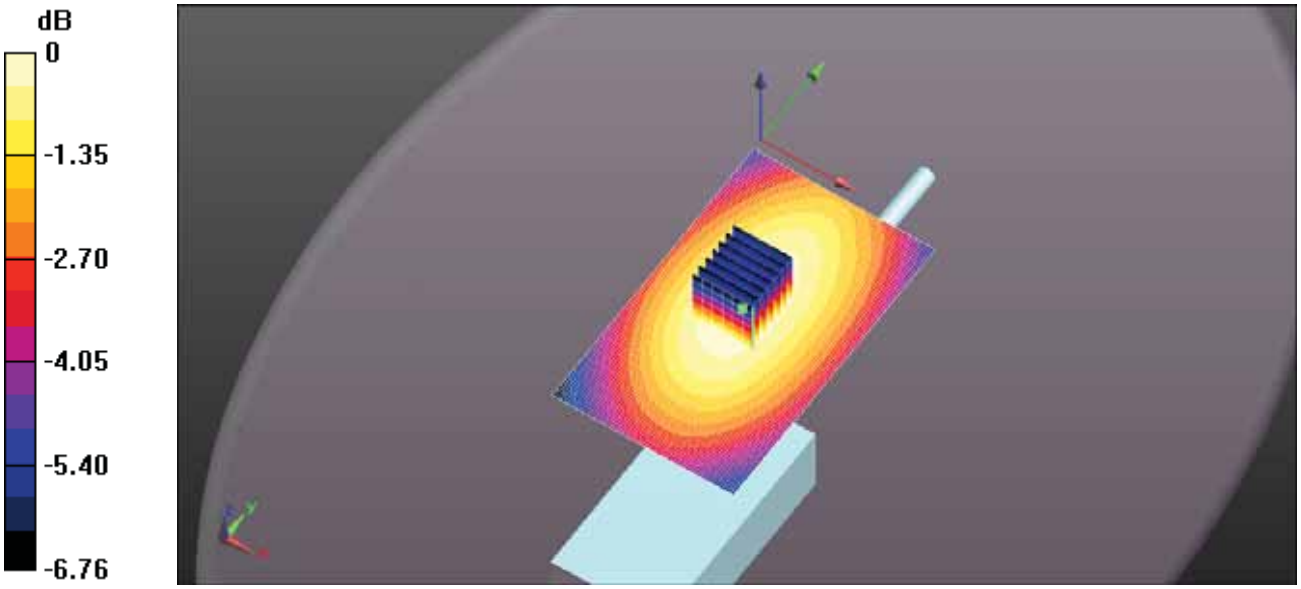

0 dB = 0.851 W/kg = -0.70 dBW/kg

Test Laboratory: Ultratech Group of Labs

FILE NAME: ICOM-489Q HEAD FA-SC61VC 141MM 136MHZ.DA52:0

DUT: IC-F1100DT; Type: VHF Receiver; Serial: 32000201-0

Communication System: UID 10000, CW; Frequency: 136 MHz; Duty Cycle: 1:1
Medium parameters used: f = 136 MHz; σ = 0.773 S/m; ε_r = 54.298; ρ = 1000 kg/m^3 ; Phantom section: Flat Section ; Measurement Standard: DASY5 (IEEE/IEC/ANSI C63.19-2011)

DASY Configuration:

- Probe: ES3DV3 - SN3250; ConvF(7.64, 7.64, 7.64); Calibrated: 3/13/2018;
- Sensor-Surface: 3mm (Mechanical Surface Detection)
- Electronics: DAE4 Sn874; Calibrated: 8/21/2017
- Phantom: ELI 4.0; Type: QD OVA 001 BB; Serial: 1057
- DASY52 52.10.0(1446); SEMCAD X 14.6.10(7417)

Configuration Head for IC-F1100DT/Head Front, P=5W, d=25mm/Zoom Scan (7x7x7) (7x7x7)/Cube 0: Measurement grid: dx=5mm, dy=5mm, dz=5mm
Reference Value = 10.75 V/m; Power Drift = 0.94 dB
Peak SAR (extrapolated) = 0.181 W/kg
SAR(1 g) = 0.127 W/kg; SAR(10 g) = 0.096 W/kg (SAR corrected for target medium)
Maximum value of SAR (measured) = 0.141 W/kg

Configuration Head for IC-F1100DT/Head Front, P=5W, d=25mm/Area Scan (61x101x1): Interpolated grid: dx=1.500 mm, dy=1.500 mm
Maximum value of SAR (interpolated) = 0.124 W/kg

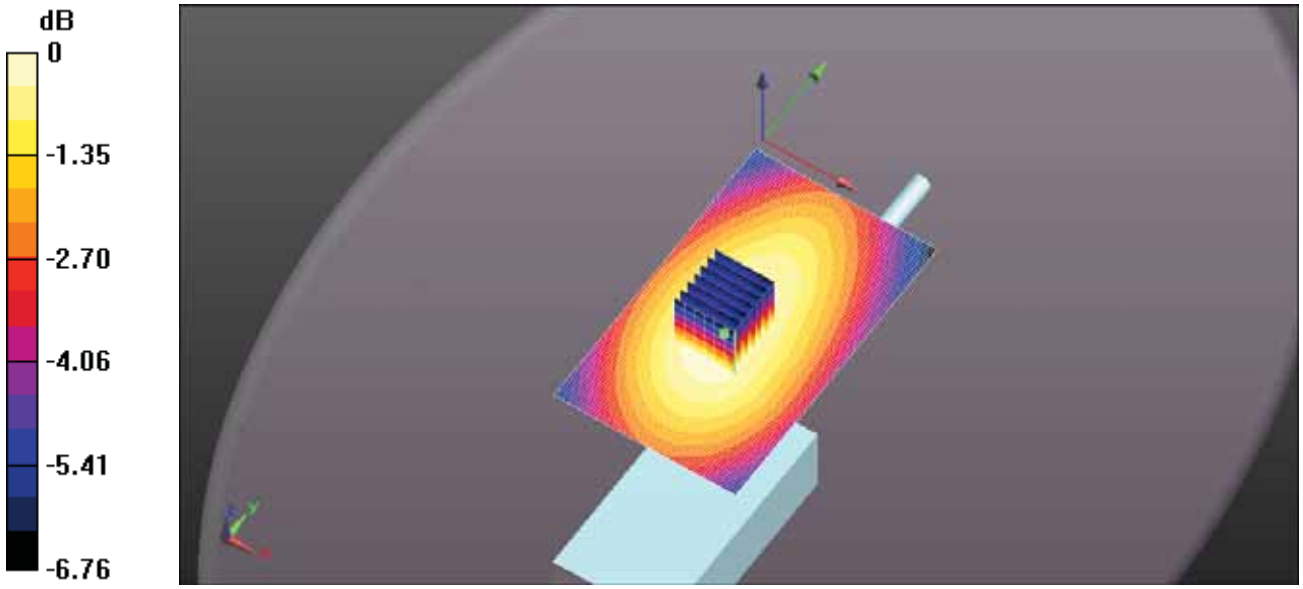

0 dB = 0.141 W/kg = -8.52 dBW/kg

Test Laboratory: Ultratech Group of Labs

FILE NAME: ICOM-489Q HEAD FA-SC61VC 141MM 142.3MHZ.DA52:0

DUT: IC-F1100DT; Type: VHF Receiver; Serial: 32000201-0

Communication System: UID 10000, CW; Frequency: 142.3 MHz; Duty Cycle: 1:1
Medium parameters used (interpolated): f = 142.3 MHz; σ = 0.78 S/m; ε_r = 54.488; ρ = 1000 kg/m^3 ;
Phantom section: Flat Section ; Measurement Standard: DASY5 (IEEE/IEC/ANSI C63.19-2011)

DASY Configuration:

- Probe: ES3DV3 - SN3250; ConvF(7.64, 7.64, 7.64); Calibrated: 3/13/2018;
- Sensor-Surface: 3mm (Mechanical Surface Detection)
- Electronics: DAE4 Sn874; Calibrated: 8/21/2017
- Phantom: ELI 4.0; Type: QD OVA 001 BB; Serial: 1057
- DASY52 52.10.0(1446); SEMCAD X 14.6.10(7417)

Configuration Head for IC-F1100DT/Head Front, P=5W, d=25mm/Zoom Scan (7x7x7) (7x7x7)/Cube 0: Measurement grid: dx=5mm, dy=5mm, dz=5mm
Reference Value = 13.11 V/m; Power Drift = -0.11 dB
Peak SAR (extrapolated) = 0.224 W/kg
SAR(1 g) = 0.157 W/kg; SAR(10 g) = 0.119 W/kg (SAR corrected for target medium)
Maximum value of SAR (measured) = 0.175 W/kg

Configuration Head for IC-F1100DT/Head Front, P=5W, d=25mm/Area Scan (61x101x1): Interpolated grid: dx=1.500 mm, dy=1.500 mm
Maximum value of SAR (interpolated) = 0.176 W/kg

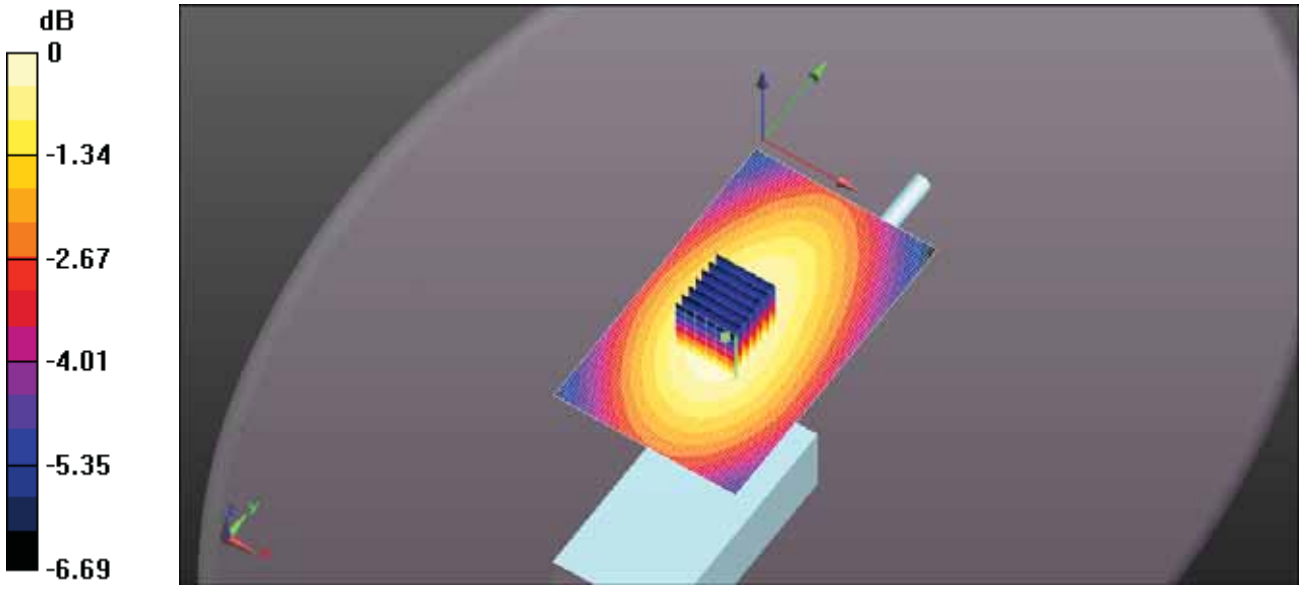

0 dB = 0.175 W/kg = -7.57 dBW/kg

Test Laboratory: Ultratech Group of Labs

FILE NAME: ICOM-489Q HEAD FA-SC61VC 141MM 148.7MHZ.DA52:0

DUT: IC-F1100DT; Type: VHF Receiver; Serial: 32000201-0

Communication System: UID 10000, CW; Frequency: 148.7 MHz; Duty Cycle: 1:1
Medium parameters used (interpolated): f = 148.7 MHz; σ = 0.787 S/m; ε_r = 54.353; ρ = 1000 kg/m^3 ;
Phantom section: Flat Section ; Measurement Standard: DASY5 (IEEE/IEC/ANSI C63.19-2011)

DASY Configuration:

- Probe: ES3DV3 - SN3250; ConvF(7.64, 7.64, 7.64); Calibrated: 3/13/2018;
- Sensor-Surface: 3mm (Mechanical Surface Detection)
- Electronics: DAE4 Sn874; Calibrated: 8/21/2017
- Phantom: ELI 4.0; Type: QD OVA 001 BB; Serial: 1057
- DASY52 52.10.0(1446); SEMCAD X 14.6.10(7417)

Configuration Head for IC-F1100DT/Head Front, P=5W, d=25mm/Zoom Scan (7x7x7) (7x8x7)/Cube 0: Measurement grid: dx=5mm, dy=5mm, dz=5mm
Reference Value = 15.48 V/m; Power Drift = -0.32 dB
Peak SAR (extrapolated) = 0.292 W/kg
SAR(1 g) = 0.205 W/kg; SAR(10 g) = 0.156 W/kg (SAR corrected for target medium)
Maximum value of SAR (measured) = 0.229 W/kg

Configuration Head for IC-F1100DT/Head Front, P=5W, d=25mm/Area Scan (61x101x1): Interpolated grid: dx=1.500 mm, dy=1.500 mm
Maximum value of SAR (interpolated) = 0.233 W/kg

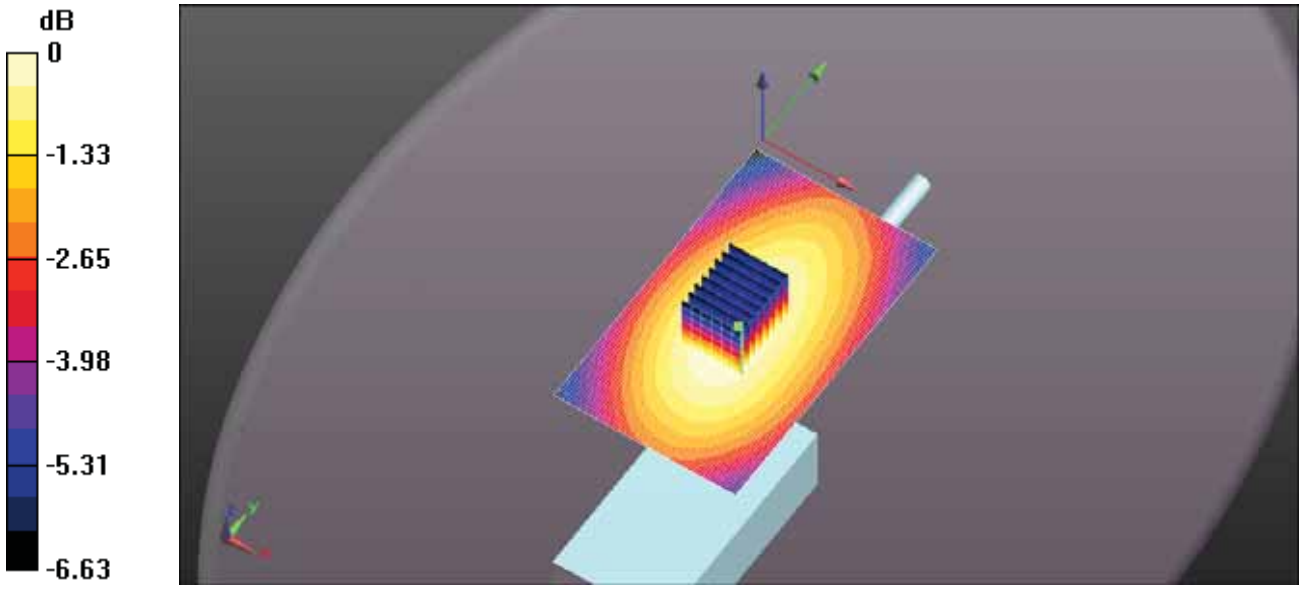

0 dB = 0.229 W/kg = -6.41 dBW/kg

Test Laboratory: Ultratech Group of Labs

FILE NAME: ICOM-489Q HEAD FA-SC61VC 141MM 155MHZ.DA52:0

DUT: IC-F1100DT; Type: VHF Receiver; Serial: 32000201-0

Communication System: UID 10000, CW; Frequency: 155 MHz; Duty Cycle: 1:1
Medium parameters used (interpolated): f = 155 MHz; σ = 0.795 S/m; ε_r = 54.309; ρ = 1000 kg/m^3 ;
Phantom section: Flat Section ; Measurement Standard: DASY5 (IEEE/IEC/ANSI C63.19-2011)

DASY Configuration:

- Probe: ES3DV3 - SN3250; ConvF(7.64, 7.64, 7.64); Calibrated: 3/13/2018;
- Sensor-Surface: 3mm (Mechanical Surface Detection)
- Electronics: DAE4 Sn874; Calibrated: 8/21/2017
- Phantom: ELI 4.0; Type: QD OVA 001 BB; Serial: 1057
- DASY52 52.10.0(1446); SEMCAD X 14.6.10(7417)

Configuration Head for IC-F1100DT/Head Front, P=5W, d=25mm/Zoom Scan (7x7x7) (7x7x7)/Cube 0: Measurement grid: dx=5mm, dy=5mm, dz=5mm
Reference Value = 22.43 V/m; Power Drift = -1.07 dB
Peak SAR (extrapolated) = 0.547 W/kg
SAR(1 g) = 0.385 W/kg; SAR(10 g) = 0.293 W/kg (SAR corrected for target medium)
Maximum value of SAR (measured) = 0.428 W/kg

Configuration Head for IC-F1100DT/Head Front, P=5W, d=25mm/Area Scan (61x101x1): Interpolated grid: dx=1.500 mm, dy=1.500 mm
Maximum value of SAR (interpolated) = 0.449 W/kg

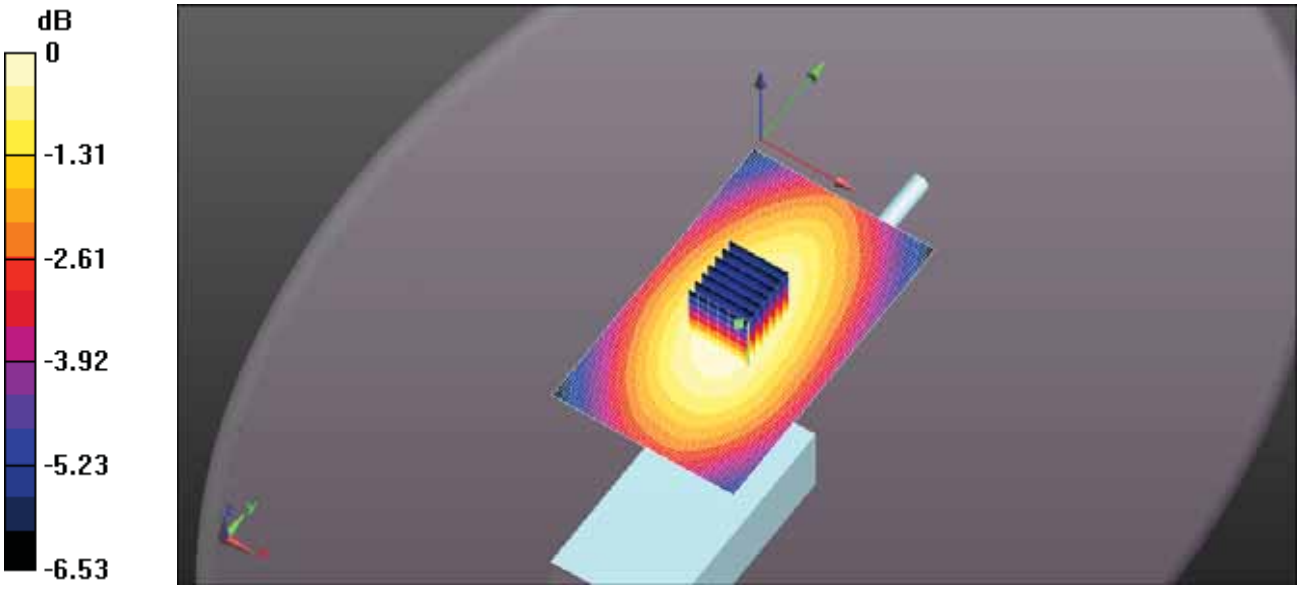

0 dB = 0.428 W/kg = -3.69 dBW/kg

Test Laboratory: Ultratech Group of Labs

FILE NAME: ICOM-489Q HEAD FA-SC61VC 141MM 161.3MHZ.DA52:0

DUT: IC-F1100DT; Type: VHF Receiver; Serial: 32000201-0

Communication System: UID 10000, CW; Frequency: 161.3 MHz; Duty Cycle: 1:1
Medium parameters used: f = 162 MHz; σ = 0.803 S/m; ε_r = 54.448; ρ = 1000 kg/m^3 ; Phantom section: Flat Section ; Measurement Standard: DASY5 (IEEE/IEC/ANSI C63.19-2011)

DASY Configuration:

- Probe: ES3DV3 - SN3250; ConvF(7.64, 7.64, 7.64); Calibrated: 3/13/2018;
- Sensor-Surface: 3mm (Mechanical Surface Detection)
- Electronics: DAE4 Sn874; Calibrated: 8/21/2017
- Phantom: ELI 4.0; Type: QD OVA 001 BB; Serial: 1057
- DASY52 52.10.0(1446); SEMCAD X 14.6.10(7417)

Configuration Head for IC-F1100DT/Head Front, P=5W, d=25mm/Zoom Scan (7x7x7) (7x7x7)/Cube 0: Measurement grid: dx=5mm, dy=5mm, dz=5mm
Reference Value = 22.15 V/m; Power Drift = 0.18 dB
Peak SAR (extrapolated) = 0.720 W/kg
SAR(1 g) = 0.504 W/kg; SAR(10 g) = 0.381 W/kg (SAR corrected for target medium)
Maximum value of SAR (measured) = 0.562 W/kg

Configuration Head for IC-F1100DT/Head Front, P=5W, d=25mm/Area Scan (61x101x1): Interpolated grid: dx=1.500 mm, dy=1.500 mm
Maximum value of SAR (interpolated) = 0.535 W/kg

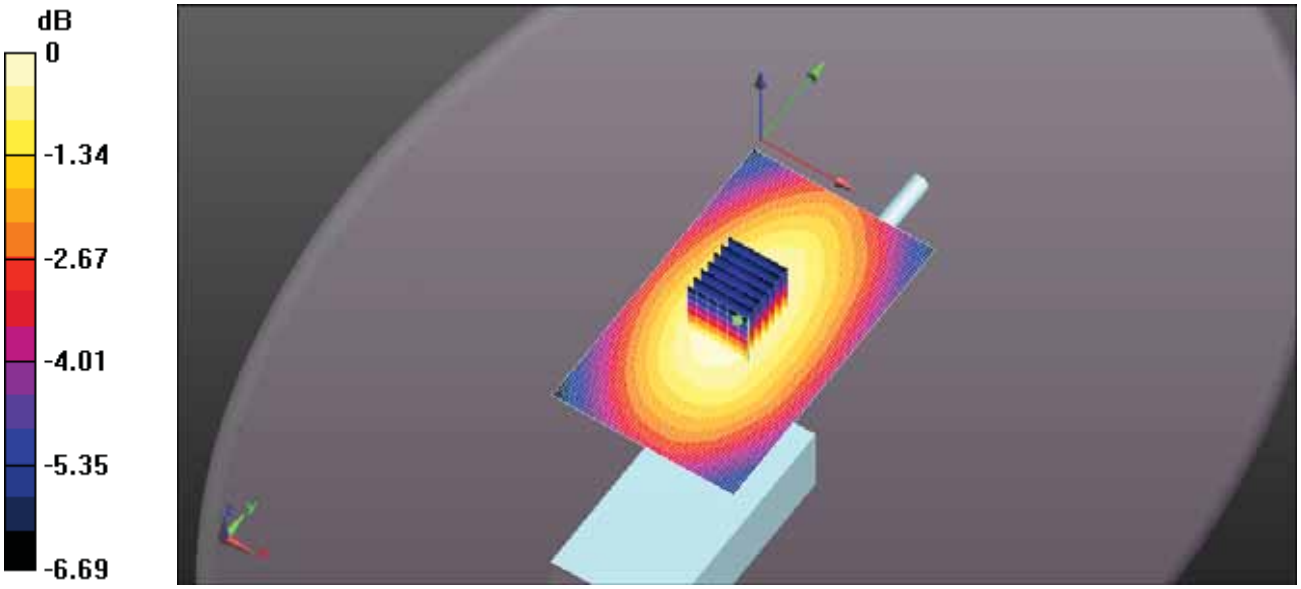

0 dB = 0.562 W/kg = -2.51 dBW/kg

Test Laboratory: Ultratech Group of Labs

FILE NAME: ICOM-489Q HEAD FA-SC61VC 141MM 167.7MHZ.DA52:0

DUT: IC-F1100DT; Type: VHF Receiver; Serial: 32000201-0

Communication System: UID 10000, CW; Frequency: 167.7 MHz; Duty Cycle: 1:1
Medium parameters used: f = 168 MHz; σ = 0.81 S/m; ε_r = 54.329; ρ = 1000 kg/m^3 ; Phantom section: Flat Section ; Measurement Standard: DASY5 (IEEE/IEC/ANSI C63.19-2011)

DASY Configuration:

- Probe: ES3DV3 - SN3250; ConvF(7.64, 7.64, 7.64); Calibrated: 3/13/2018;
- Sensor-Surface: 3mm (Mechanical Surface Detection)
- Electronics: DAE4 Sn874; Calibrated: 8/21/2017
- Phantom: ELI 4.0; Type: QD OVA 001 BB; Serial: 1057
- DASY52 52.10.0(1446); SEMCAD X 14.6.10(7417)

Configuration Head for IC-F1100DT/Head Front, P=5W, d=25mm/Zoom Scan (7x7x7) (7x7x7)/Cube 0: Measurement grid: dx=5mm, dy=5mm, dz=5mm
Reference Value = 30.60 V/m; Power Drift = 0.35 dB
Peak SAR (extrapolated) = 1.38 W/kg
SAR(1 g) = 0.971 W/kg; SAR(10 g) = 0.736 W/kg (SAR corrected for target medium)
Maximum value of SAR (measured) = 1.08 W/kg

Configuration Head for IC-F1100DT/Head Front, P=5W, d=25mm/Area Scan (61x101x1): Interpolated grid: dx=1.500 mm, dy=1.500 mm
Maximum value of SAR (interpolated) = 1.02 W/kg

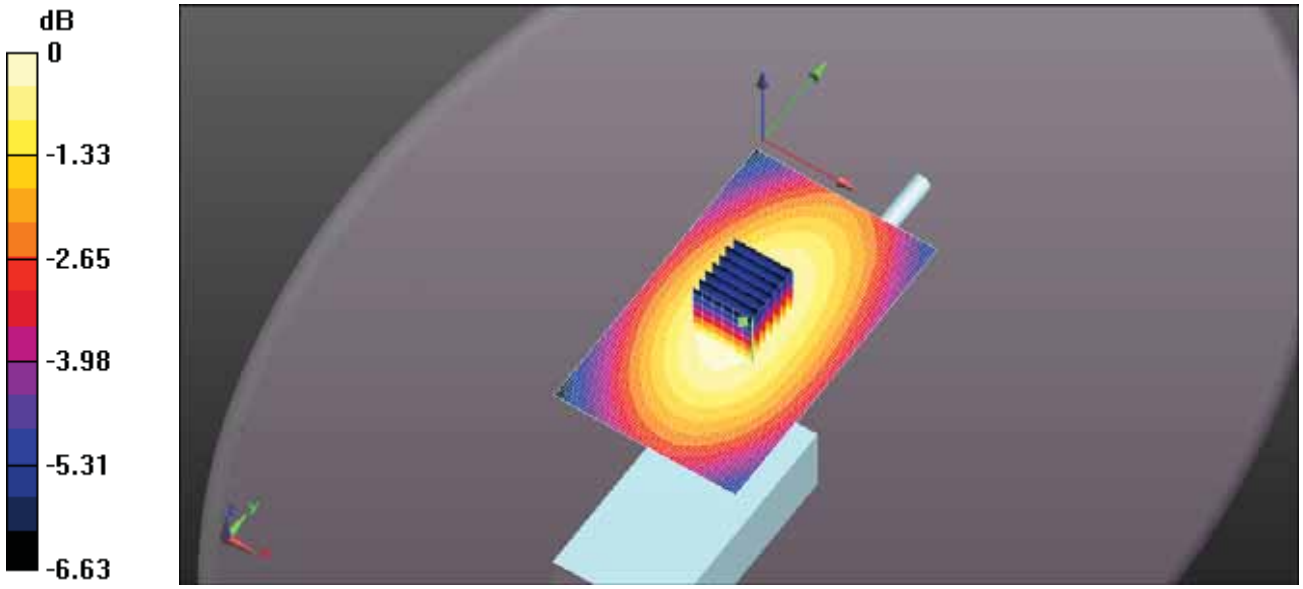

0 dB = 1.08 W/kg = 0.34 dBW/kg

Test Laboratory: Ultratech Group of Labs

FILE NAME: ICOM-489Q HEAD FA-SC61VC 141MM 174MHZ.DA52:0

DUT: IC-F1100DT; Type: VHF Receiver; Serial: 32000201-0

Communication System: UID 10000, CW; Frequency: 174 MHz; Duty Cycle: 1:1
Medium parameters used: f = 174 MHz; σ = 0.818 S/m; ε_r = 54.228; ρ = 1000 kg/m^3 ; Phantom section: Flat Section ; Measurement Standard: DASY5 (IEEE/IEC/ANSI C63.19-2011)

DASY Configuration:

- Probe: ES3DV3 - SN3250; ConvF(7.64, 7.64, 7.64); Calibrated: 3/13/2018;
- Sensor-Surface: 3mm (Mechanical Surface Detection)
- Electronics: DAE4 Sn874; Calibrated: 8/21/2017
- Phantom: ELI 4.0; Type: QD OVA 001 BB; Serial: 1057
- DASY52 52.10.0(1446); SEMCAD X 14.6.10(7417)

Configuration Head for IC-F1100DT/Head Front, P=5W, d=25mm/Zoom Scan (7x7x7) (7x7x7)/Cube 0: Measurement grid: dx=5mm, dy=5mm, dz=5mm
Reference Value = 41.11 V/m; Power Drift = -0.45 dB
Peak SAR (extrapolated) = 2.23 W/kg
SAR(1 g) = 1.56 W/kg; SAR(10 g) = 1.18 W/kg (SAR corrected for target medium)
Maximum value of SAR (measured) = 1.74 W/kg

Configuration Head for IC-F1100DT/Head Front, P=5W, d=25mm/Area Scan (61x101x1): Interpolated grid: dx=1.500 mm, dy=1.500 mm
Maximum value of SAR (interpolated) = 1.76 W/kg

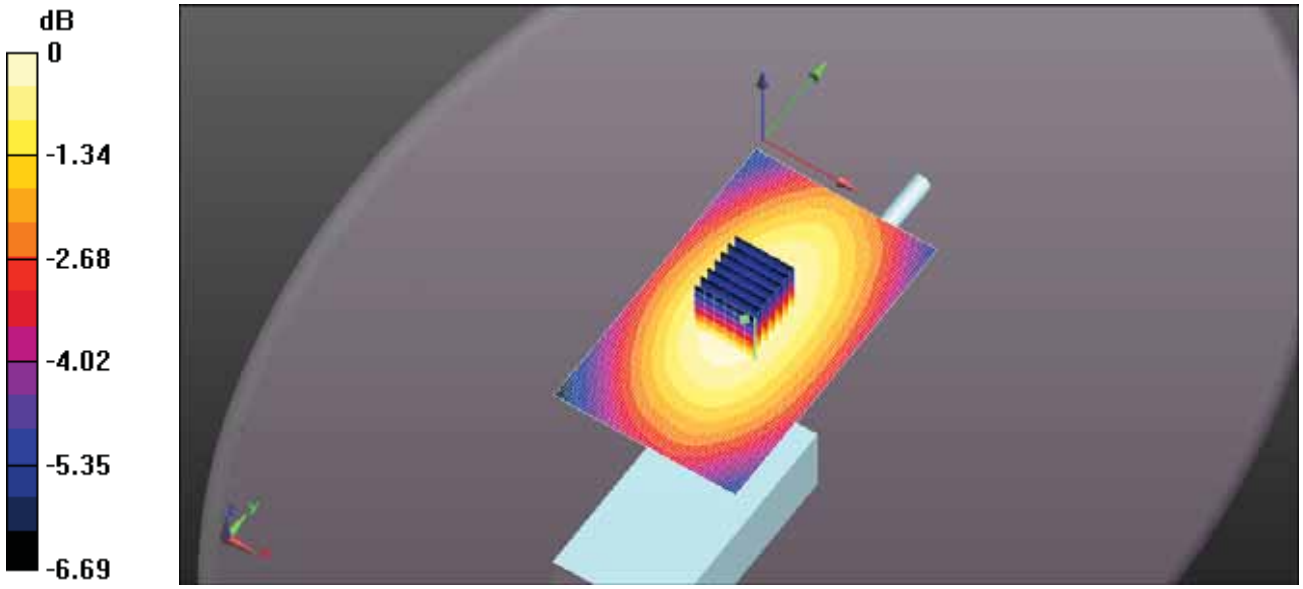

0 dB = 1.74 W/kg = 2.40 dBW/kg

Test Laboratory: Ultratech Group of Labs

FILE NAME: ICOM-489Q HEAD FA-SC61VC 137MM 136MHZ.DA52:0

DUT: IC-F1100DT; Type: VHF Receiver; Serial: 32000201-0

Communication System: UID 10000, CW; Frequency: 136 MHz; Duty Cycle: 1:1
Medium parameters used: f = 136 MHz; σ = 0.773 S/m; ε_r = 54.298; ρ = 1000 kg/m^3 ; Phantom section: Flat Section ; Measurement Standard: DASY5 (IEEE/IEC/ANSI C63.19-2011)

DASY Configuration:

- Probe: ES3DV3 - SN3250; ConvF(7.64, 7.64, 7.64); Calibrated: 3/13/2018;
- Sensor-Surface: 3mm (Mechanical Surface Detection)
- Electronics: DAE4 Sn874; Calibrated: 8/21/2017
- Phantom: ELI 4.0; Type: QD OVA 001 BB; Serial: 1057
- DASY52 52.10.0(1446); SEMCAD X 14.6.10(7417)

Configuration Head for IC-F1100DT/Head Front, P=5W, d=25mm/Zoom Scan (7x7x7) (7x7x7)/Cube 0: Measurement grid: dx=5mm, dy=5mm, dz=5mm
Reference Value = 10.21 V/m; Power Drift = 0.91 dB
Peak SAR (extrapolated) = 0.155 W/kg
SAR(1 g) = 0.108 W/kg; SAR(10 g) = 0.082 W/kg (SAR corrected for target medium)
Maximum value of SAR (measured) = 0.120 W/kg

Configuration Head for IC-F1100DT/Head Front, P=5W, d=25mm/Area Scan (61x101x1): Interpolated grid: dx=1.500 mm, dy=1.500 mm
Maximum value of SAR (interpolated) = 0.105 W/kg

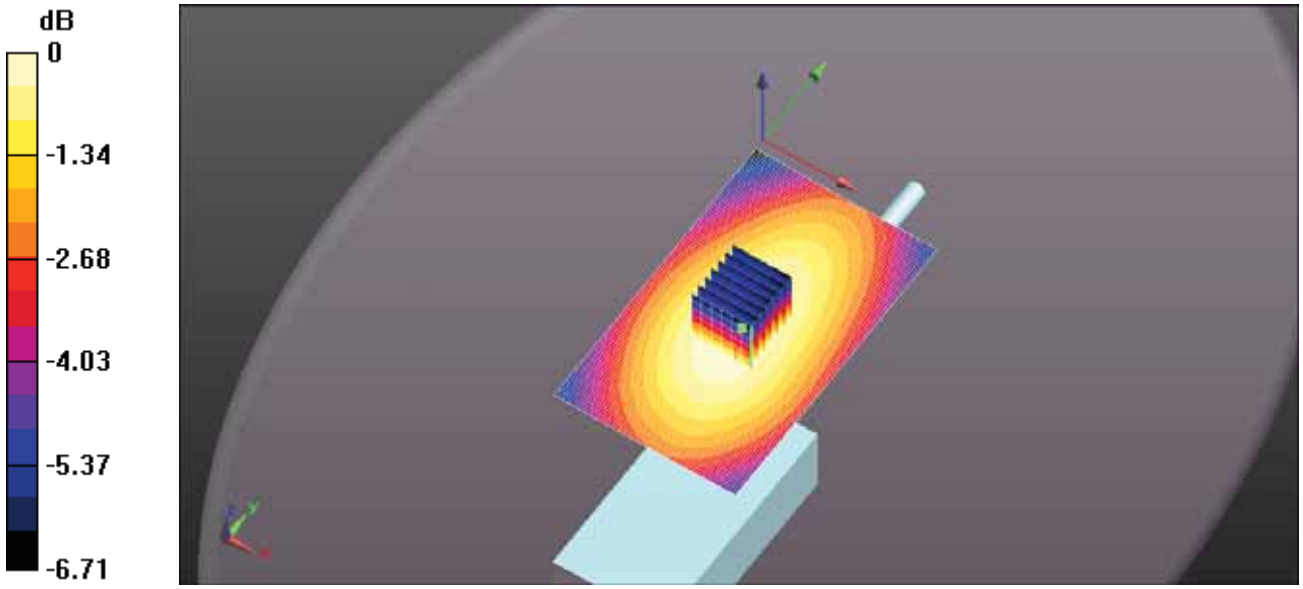

0 dB = 0.120 W/kg = -9.21 dBW/kg

Test Laboratory: Ultratech Group of Labs

FILE NAME: ICOM-489Q HEAD FA-SC61VC 137MM 142.3MHZ.DA52:0

DUT: IC-F1100DT; Type: VHF Receiver; Serial: 32000201-0

Communication System: UID 10000, CW; Frequency: 142.3 MHz; Duty Cycle: 1:1
Medium parameters used (interpolated): f = 142.3 MHz; σ = 0.78 S/m; ε_r = 54.488; ρ = 1000 kg/m^3 ;
Phantom section: Flat Section ; Measurement Standard: DASY5 (IEEE/IEC/ANSI C63.19-2011)

DASY Configuration:

- Probe: ES3DV3 - SN3250; ConvF(7.64, 7.64, 7.64); Calibrated: 3/13/2018;
- Sensor-Surface: 3mm (Mechanical Surface Detection)
- Electronics: DAE4 Sn874; Calibrated: 8/21/2017
- Phantom: ELI 4.0; Type: QD OVA 001 BB; Serial: 1057
- DASY52 52.10.0(1446); SEMCAD X 14.6.10(7417)

Configuration Head for IC-F1100DT/Head Front, P=5W, d=25mm/Zoom Scan (7x7x7) (7x7x7)/Cube 0: Measurement grid: dx=5mm, dy=5mm, dz=5mm
Reference Value = 12.55 V/m; Power Drift = -0.50 dB
Peak SAR (extrapolated) = 0.184 W/kg
SAR(1 g) = 0.129 W/kg; SAR(10 g) = 0.098 W/kg (SAR corrected for target medium)
Maximum value of SAR (measured) = 0.144 W/kg

Configuration Head for IC-F1100DT/Head Front, P=5W, d=25mm/Area Scan (61x101x1): Interpolated grid: dx=1.500 mm, dy=1.500 mm
Maximum value of SAR (interpolated) = 0.147 W/kg

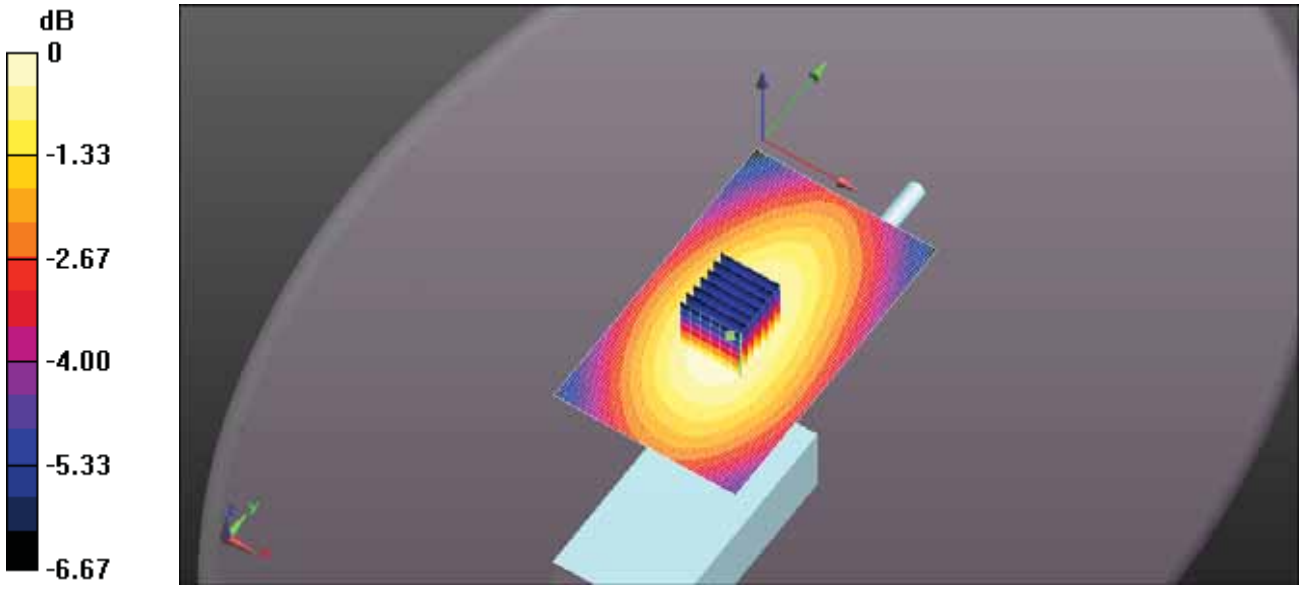

0 dB = 0.144 W/kg = -8.42 dBW/kg

Test Laboratory: Ultratech Group of Labs

FILE NAME: ICOM-489Q HEAD FA-SC61VC 137MM 148.7MHZ.DA52:0

DUT: IC-F1100DT; Type: VHF Receiver; Serial: 32000201-0

Communication System: UID 10000, CW; Frequency: 148.7 MHz; Duty Cycle: 1:1
Medium parameters used (interpolated): f = 148.7 MHz; σ = 0.787 S/m; ε_r = 54.353; ρ = 1000 kg/m^3 ;
Phantom section: Flat Section ; Measurement Standard: DASY5 (IEEE/IEC/ANSI C63.19-2011)

DASY Configuration:

- Probe: ES3DV3 - SN3250; ConvF(7.64, 7.64, 7.64); Calibrated: 3/13/2018;
- Sensor-Surface: 3mm (Mechanical Surface Detection)
- Electronics: DAE4 Sn874; Calibrated: 8/21/2017
- Phantom: ELI 4.0; Type: QD OVA 001 BB; Serial: 1057
- DASY52 52.10.0(1446); SEMCAD X 14.6.10(7417)

Configuration Head for IC-F1100DT/Head Front, P=5W, d=25mm/Zoom Scan (7x7x7) (7x7x7)/Cube 0: Measurement grid: dx=5mm, dy=5mm, dz=5mm
Reference Value = 13.89 V/m; Power Drift = -0.30 dB
Peak SAR (extrapolated) = 0.240 W/kg
SAR(1 g) = 0.168 W/kg; SAR(10 g) = 0.128 W/kg (SAR corrected for target medium)
Maximum value of SAR (measured) = 0.187 W/kg

Configuration Head for IC-F1100DT/Head Front, P=5W, d=25mm/Area Scan (61x101x1): Interpolated grid: dx=1.500 mm, dy=1.500 mm
Maximum value of SAR (interpolated) = 0.190 W/kg

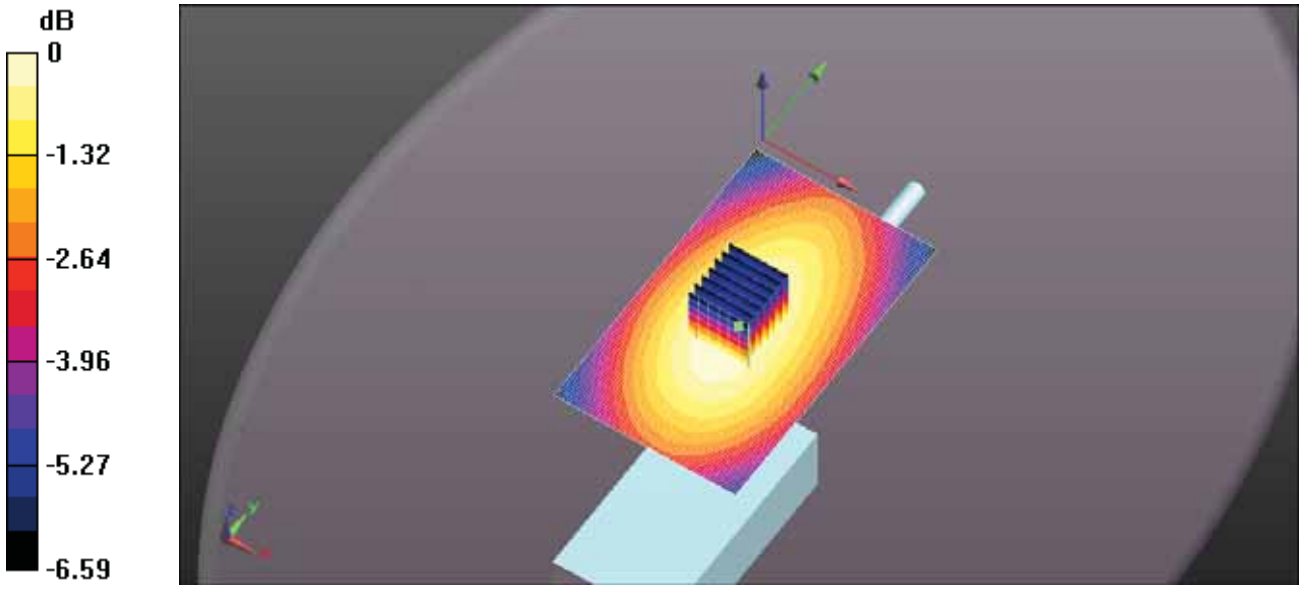

0 dB = 0.187 W/kg = -7.28 dBW/kg

Test Laboratory: Ultratech Group of Labs

FILE NAME: ICOM-489Q HEAD FA-SC61VC 137MM 155MHZ.DA52:0

DUT: IC-F1100DT; Type: VHF Receiver; Serial: 32000201-0

Communication System: UID 10000, CW; Frequency: 155 MHz; Duty Cycle: 1:1
Medium parameters used (interpolated): f = 155 MHz; σ = 0.795 S/m; ε_r = 54.309; ρ = 1000 kg/m^3 ;
Phantom section: Flat Section ; Measurement Standard: DASY5 (IEEE/IEC/ANSI C63.19-2011)

DASY Configuration:

- Probe: ES3DV3 - SN3250; ConvF(7.64, 7.64, 7.64); Calibrated: 3/13/2018;
- Sensor-Surface: 3mm (Mechanical Surface Detection)
- Electronics: DAE4 Sn874; Calibrated: 8/21/2017
- Phantom: ELI 4.0; Type: QD OVA 001 BB; Serial: 1057
- DASY52 52.10.0(1446); SEMCAD X 14.6.10(7417)

Configuration Head for IC-F1100DT/Head Front, P=5W, d=25mm/Zoom Scan (7x7x7) (7x7x7)/Cube 0: Measurement grid: dx=5mm, dy=5mm, dz=5mm
Reference Value = 18.86 V/m; Power Drift = -0.41 dB
Peak SAR (extrapolated) = 0.432 W/kg
SAR(1 g) = 0.301 W/kg; SAR(10 g) = 0.228 W/kg (SAR corrected for target medium)
Maximum value of SAR (measured) = 0.336 W/kg

Configuration Head for IC-F1100DT/Head Front, P=5W, d=25mm/Area Scan (61x101x1): Interpolated grid: dx=1.500 mm, dy=1.500 mm
Maximum value of SAR (interpolated) = 0.340 W/kg

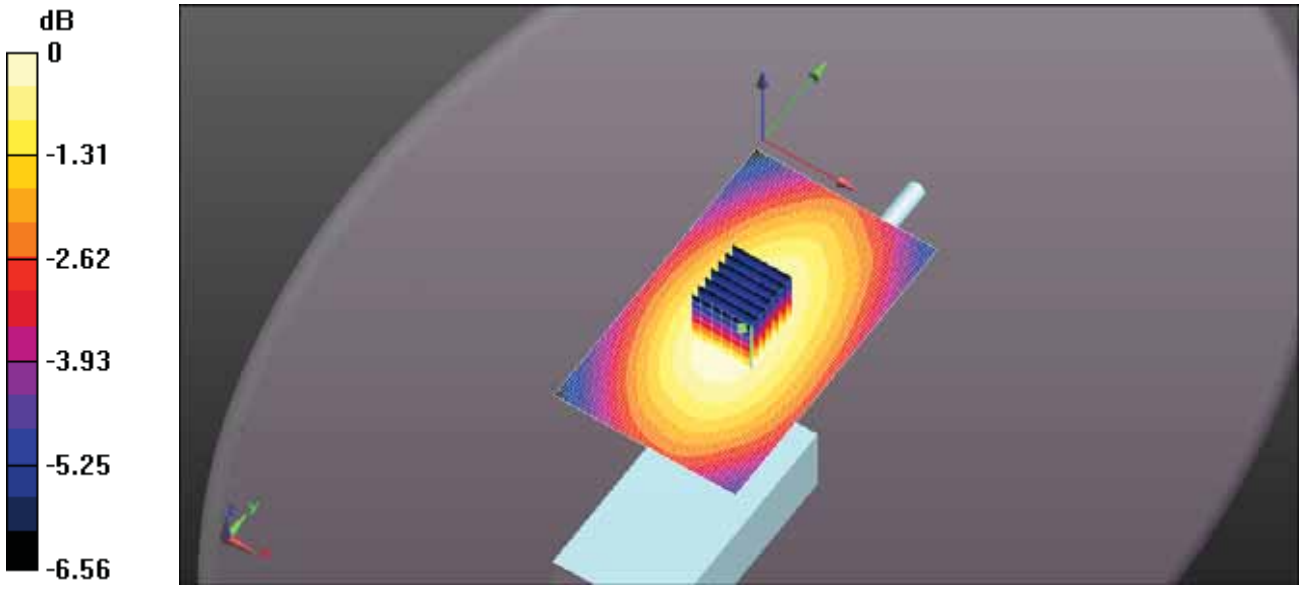

0 dB = 0.336 W/kg = -4.73 dBW/kg

Test Laboratory: Ultratech Group of Labs

FILE NAME: ICOM-489Q HEAD FA-SC61VC 137MM 161.3MHZ.DA52:0

DUT: IC-F1100DT; Type: VHF Receiver; Serial: 32000201-0

Communication System: UID 10000, CW; Frequency: 161.3 MHz; Duty Cycle: 1:1
Medium parameters used: f = 162 MHz; σ = 0.803 S/m; ε_r = 54.448; ρ = 1000 kg/m^3 ; Phantom section: Flat Section ; Measurement Standard: DASY5 (IEEE/IEC/ANSI C63.19-2011)

DASY Configuration:

- Probe: ES3DV3 - SN3250; ConvF(7.64, 7.64, 7.64); Calibrated: 3/13/2018;
- Sensor-Surface: 3mm (Mechanical Surface Detection)
- Electronics: DAE4 Sn874; Calibrated: 8/21/2017
- Phantom: ELI 4.0; Type: QD OVA 001 BB; Serial: 1057
- DASY52 52.10.0(1446); SEMCAD X 14.6.10(7417)

Configuration Head for IC-F1100DT/Head Front, P=5W, d=25mm/Zoom Scan (7x7x7) (7x7x7)/Cube 0: Measurement grid: dx=5mm, dy=5mm, dz=5mm
Reference Value = 19.57 V/m; Power Drift = 0.23 dB
Peak SAR (extrapolated) = 0.526 W/kg
SAR(1 g) = 0.367 W/kg; SAR(10 g) = 0.278 W/kg (SAR corrected for target medium)
Maximum value of SAR (measured) = 0.409 W/kg

Configuration Head for IC-F1100DT/Head Front, P=5W, d=25mm/Area Scan (61x101x1): Interpolated grid: dx=1.500 mm, dy=1.500 mm
Maximum value of SAR (interpolated) = 0.382 W/kg

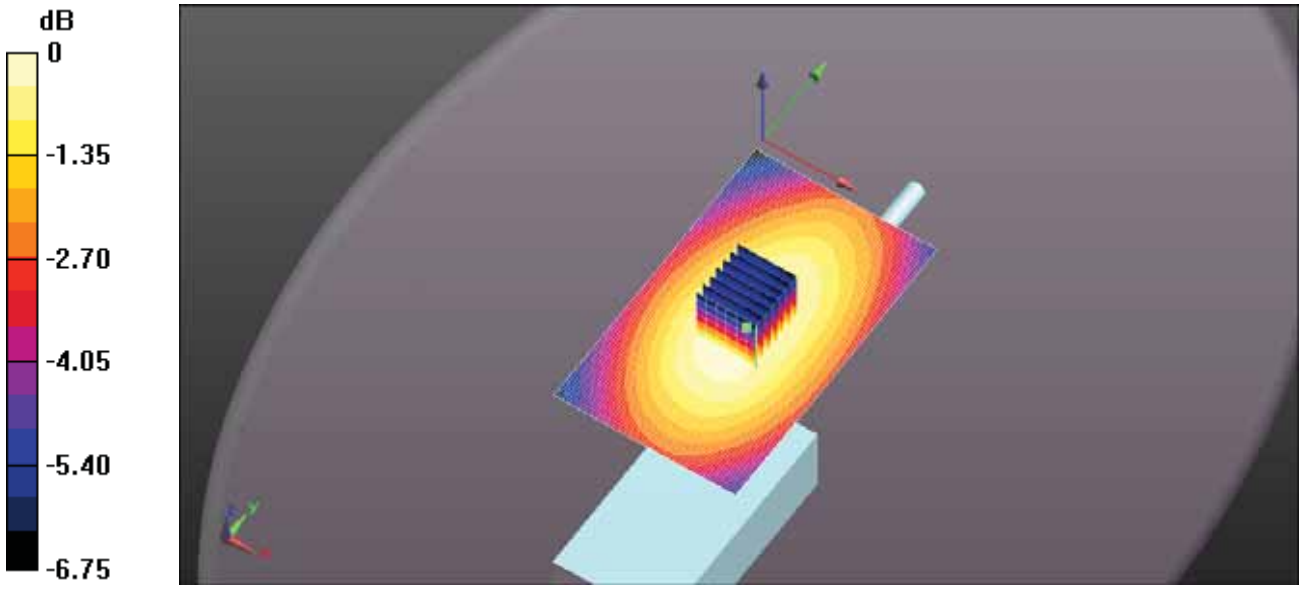

0 dB = 0.409 W/kg = -3.88 dBW/kg

Test Laboratory: Ultratech Group of Labs

FILE NAME: ICOM-489Q HEAD FA-SC61VC 137MM 167.7MHZ.DA52:0

DUT: IC-F1100DT; Type: VHF Receiver; Serial: 32000201-0

Communication System: UID 10000, CW; Frequency: 167.7 MHz; Duty Cycle: 1:1
Medium parameters used: f = 168 MHz; σ = 0.81 S/m; ε_r = 54.329; ρ = 1000 kg/m^3 ; Phantom section: Flat Section ; Measurement Standard: DASY5 (IEEE/IEC/ANSI C63.19-2011)

DASY Configuration:

- Probe: ES3DV3 - SN3250; ConvF(7.64, 7.64, 7.64); Calibrated: 3/13/2018;
- Sensor-Surface: 3mm (Mechanical Surface Detection)
- Electronics: DAE4 Sn874; Calibrated: 8/21/2017
- Phantom: ELI 4.0; Type: QD OVA 001 BB; Serial: 1057
- DASY52 52.10.0(1446); SEMCAD X 14.6.10(7417)

Configuration Head for IC-F1100DT/Head Front, P=5W, d=25mm/Zoom Scan (7x7x7) (7x7x7)/Cube 0: Measurement grid: dx=5mm, dy=5mm, dz=5mm
Reference Value = 25.15 V/m; Power Drift = 0.50 dB
Peak SAR (extrapolated) = 0.960 W/kg
SAR(1 g) = 0.669 W/kg; SAR(10 g) = 0.504 W/kg (SAR corrected for target medium)
Maximum value of SAR (measured) = 0.746 W/kg

Configuration Head for IC-F1100DT/Head Front, P=5W, d=25mm/Area Scan (61x101x1): Interpolated grid: dx=1.500 mm, dy=1.500 mm
Maximum value of SAR (interpolated) = 0.680 W/kg

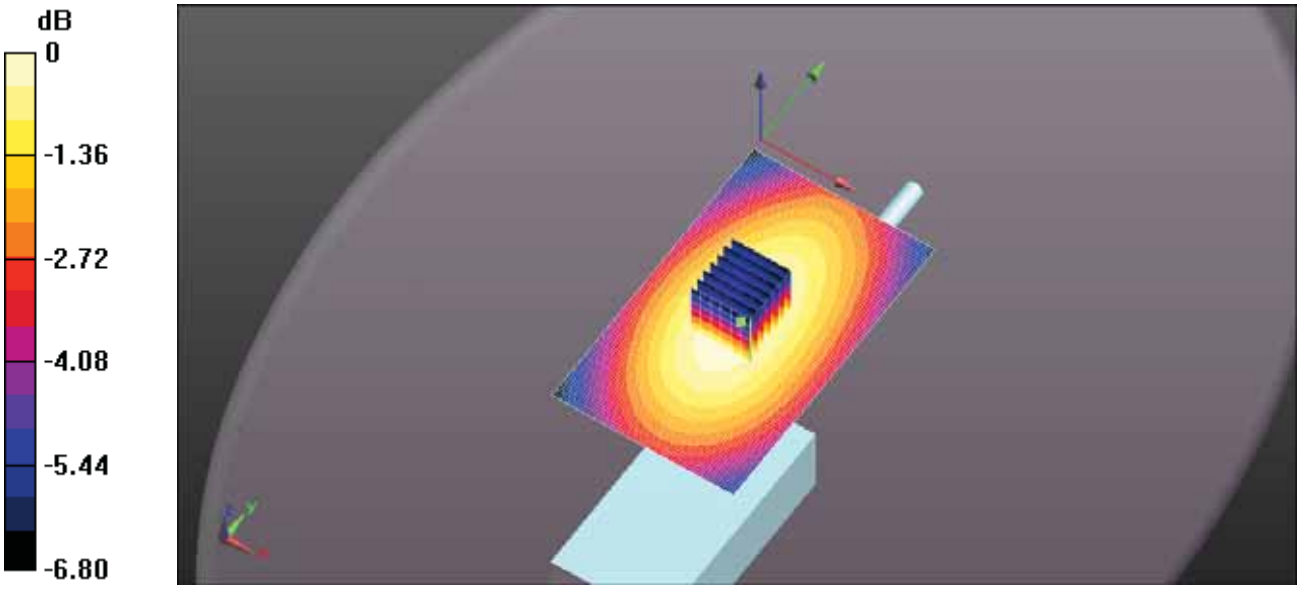

0 dB = 0.746 W/kg = -1.27 dBW/kg

Test Laboratory: Ultratech Group of Labs

FILE NAME: ICOM-489Q HEAD FA-SC61VC 137MM 174MHZ.DA52:0

DUT: IC-F1100DT; Type: VHF Receiver; Serial: 32000201-0

Communication System: UID 10000, CW; Frequency: 174 MHz; Duty Cycle: 1:1
Medium parameters used: f = 174 MHz; σ = 0.818 S/m; ε_r = 54.228; ρ = 1000 kg/m^3 ; Phantom section: Flat Section ; Measurement Standard: DASY5 (IEEE/IEC/ANSI C63.19-2011)

DASY Configuration:

- Probe: ES3DV3 - SN3250; ConvF(7.64, 7.64, 7.64); Calibrated: 3/13/2018;
- Sensor-Surface: 3mm (Mechanical Surface Detection)
- Electronics: DAE4 Sn874; Calibrated: 8/21/2017
- Phantom: ELI 4.0; Type: QD OVA 001 BB; Serial: 1057
- DASY52 52.10.0(1446); SEMCAD X 14.6.10(7417)

Configuration Head for IC-F1100DT/Head Front, P=5W, d=25mm/Zoom Scan (7x7x7) (7x7x7)/Cube 0: Measurement grid: dx=5mm, dy=5mm, dz=5mm
Reference Value = 37.49 V/m; Power Drift = -0.33 dB
Peak SAR (extrapolated) = 1.92 W/kg
SAR(1 g) = 1.34 W/kg; SAR(10 g) = 1.01 W/kg (SAR corrected for target medium)
Maximum value of SAR (measured) = 1.50 W/kg

Configuration Head for IC-F1100DT/Head Front, P=5W, d=25mm/Area Scan (61x101x1): Interpolated grid: dx=1.500 mm, dy=1.500 mm
Maximum value of SAR (interpolated) = 1.49 W/kg

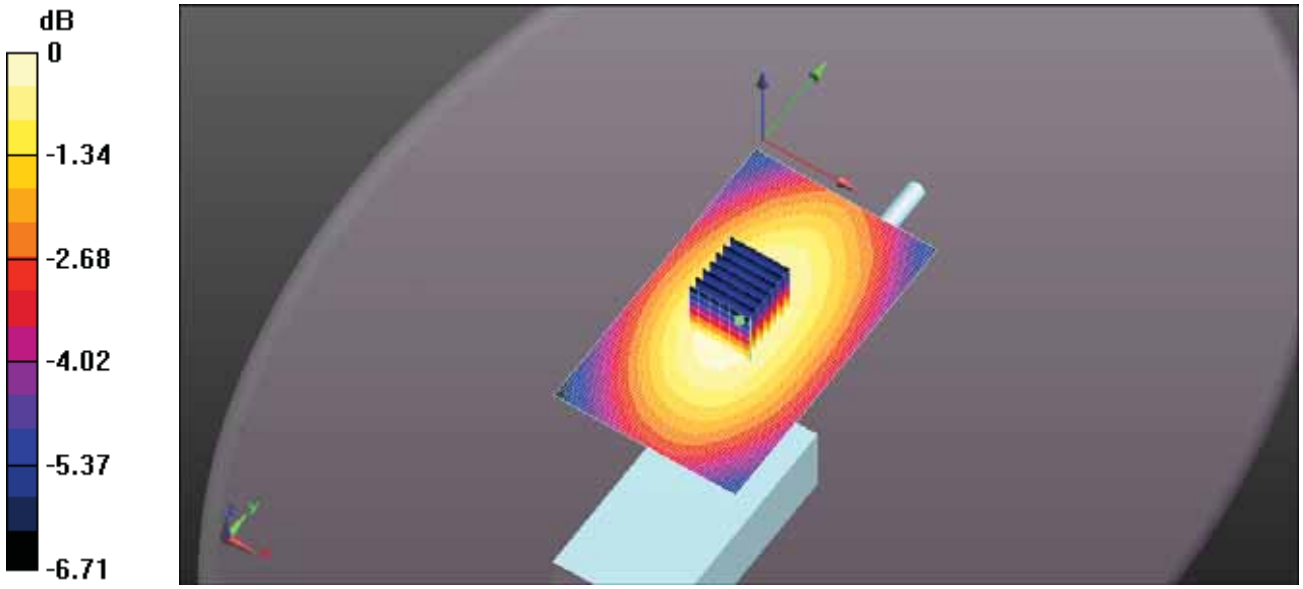

0 dB = 1.50 W/kg = 1.75 dBW/kg

Test Laboratory: Ultratech Group of Labs

FILE NAME: ICOM-489Q HEAD FA-SC61VC 133MM 136MHZ.DA52:0

DUT: IC-F1100DT; Type: VHF Receiver; Serial: 32000201-0

Communication System: UID 10000, CW; Frequency: 136 MHz; Duty Cycle: 1:1
Medium parameters used: f = 136 MHz; σ = 0.773 S/m; ε_r = 54.298; ρ = 1000 kg/m^3 ; Phantom section: Flat Section ; Measurement Standard: DASY5 (IEEE/IEC/ANSI C63.19-2011)

DASY Configuration:

- Probe: ES3DV3 - SN3250; ConvF(7.64, 7.64, 7.64); Calibrated: 3/13/2018;
- Sensor-Surface: 3mm (Mechanical Surface Detection)
- Electronics: DAE4 Sn874; Calibrated: 8/21/2017
- Phantom: ELI 4.0; Type: QD OVA 001 BB; Serial: 1057
- DASY52 52.10.0(1446); SEMCAD X 14.6.10(7417)

Configuration Head for IC-F1100DT/Head Front, P=5W, d=25mm/Zoom Scan (7x7x7) (7x7x7)/Cube 0: Measurement grid: dx=5mm, dy=5mm, dz=5mm
Reference Value = 10.39 V/m; Power Drift = -0.20 dB
Peak SAR (extrapolated) = 0.127 W/kg
SAR(1 g) = 0.089 W/kg; SAR(10 g) = 0.067 W/kg (SAR corrected for target medium)
Maximum value of SAR (measured) = 0.0985 W/kg

Configuration Head for IC-F1100DT/Head Front, P=5W, d=25mm/Area Scan (61x101x1): Interpolated grid: dx=1.500 mm, dy=1.500 mm
Maximum value of SAR (interpolated) = 0.0919 W/kg

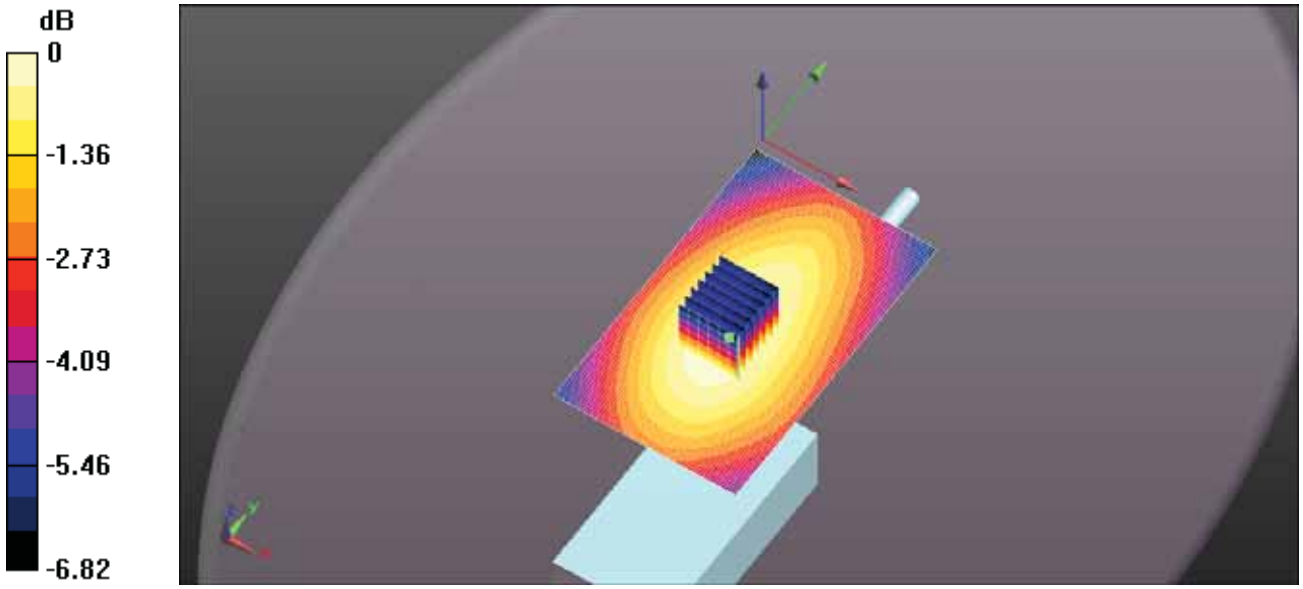

0 dB = 0.0985 W/kg = -10.06 dBW/kg

Test Laboratory: Ultratech Group of Labs

FILE NAME: ICOM-489Q HEAD FA-SC61VC 133MM 142.3MHZ.DA52:0

DUT: IC-F1100DT; Type: VHF Receiver; Serial: 32000201-0

Communication System: UID 10000, CW; Frequency: 142.3 MHz; Duty Cycle: 1:1
Medium parameters used (interpolated): f = 142.3 MHz; σ = 0.78 S/m; ε_r = 54.488; ρ = 1000 kg/m^3 ;
Phantom section: Flat Section ; Measurement Standard: DASY5 (IEEE/IEC/ANSI C63.19-2011)

DASY Configuration:

- Probe: ES3DV3 - SN3250; ConvF(7.64, 7.64, 7.64); Calibrated: 3/13/2018;
- Sensor-Surface: 3mm (Mechanical Surface Detection)
- Electronics: DAE4 Sn874; Calibrated: 8/21/2017
- Phantom: ELI 4.0; Type: QD OVA 001 BB; Serial: 1057
- DASY52 52.10.0(1446); SEMCAD X 14.6.10(7417)

Configuration Head for IC-F1100DT/Head Front, P=5W, d=25mm/Zoom Scan (7x7x7) (7x7x7)/Cube 0: Measurement grid: dx=5mm, dy=5mm, dz=5mm
Reference Value = 11.13 V/m; Power Drift = -0.02 dB
Peak SAR (extrapolated) = 0.158 W/kg
SAR(1 g) = 0.110 W/kg; SAR(10 g) = 0.084 W/kg (SAR corrected for target medium)
Maximum value of SAR (measured) = 0.123 W/kg

Configuration Head for IC-F1100DT/Head Front, P=5W, d=25mm/Area Scan (61x101x1): Interpolated grid: dx=1.500 mm, dy=1.500 mm
Maximum value of SAR (interpolated) = 0.123 W/kg

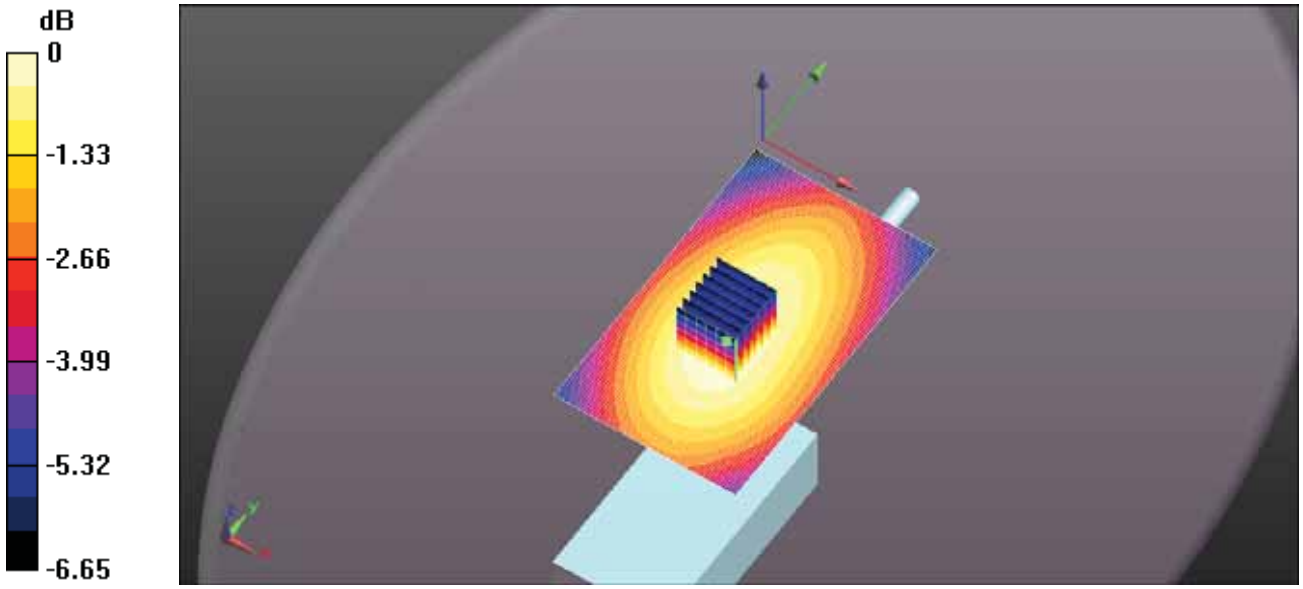

0 dB = 0.123 W/kg = -9.10 dBW/kg

Test Laboratory: Ultratech Group of Labs

FILE NAME: ICOM-489Q HEAD FA-SC61VC 133MM 148.7MHZ.DA52:0

DUT: IC-F1100DT; Type: VHF Receiver; Serial: 32000201-0

Communication System: UID 10000, CW; Frequency: 148.7 MHz; Duty Cycle: 1:1
Medium parameters used (interpolated): f = 148.7 MHz; σ = 0.787 S/m; ε_r = 54.353; ρ = 1000 kg/m^3 ;
Phantom section: Flat Section ; Measurement Standard: DASY5 (IEEE/IEC/ANSI C63.19-2011)

DASY Configuration:

- Probe: ES3DV3 - SN3250; ConvF(7.64, 7.64, 7.64); Calibrated: 3/13/2018;
- Sensor-Surface: 3mm (Mechanical Surface Detection)
- Electronics: DAE4 Sn874; Calibrated: 8/21/2017
- Phantom: ELI 4.0; Type: QD OVA 001 BB; Serial: 1057
- DASY52 52.10.0(1446); SEMCAD X 14.6.10(7417)

Configuration Head for IC-F1100DT/Head Front, P=5W, d=25mm/Zoom Scan (7x7x7) (7x7x7)/Cube 0: Measurement grid: dx=5mm, dy=5mm, dz=5mm
Reference Value = 12.60 V/m; Power Drift = -0.29 dB
Peak SAR (extrapolated) = 0.201 W/kg
SAR(1 g) = 0.141 W/kg; SAR(10 g) = 0.107 W/kg (SAR corrected for target medium)
Maximum value of SAR (measured) = 0.157 W/kg

Configuration Head for IC-F1100DT/Head Front, P=5W, d=25mm/Area Scan (61x101x1): Interpolated grid: dx=1.500 mm, dy=1.500 mm
Maximum value of SAR (interpolated) = 0.159 W/kg

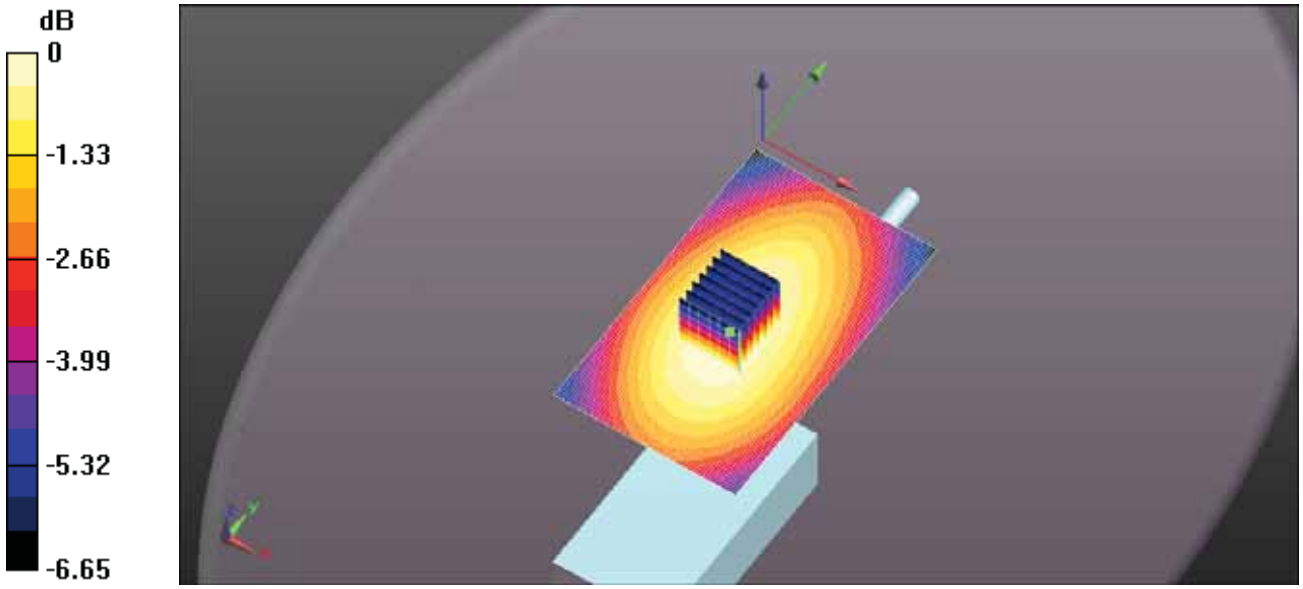

0 dB = 0.157 W/kg = -8.05 dBW/kg

Test Laboratory: Ultratech Group of Labs

FILE NAME: ICOM-489Q HEAD FA-SC61VC 133MM 155MHZ.DA52:0

DUT: IC-F1100DT; Type: VHF Receiver; Serial: 32000201-0

Communication System: UID 10000, CW; Frequency: 155 MHz; Duty Cycle: 1:1
Medium parameters used (interpolated): f = 155 MHz; σ = 0.795 S/m; ε_r = 54.309; ρ = 1000 kg/m^3 ;
Phantom section: Flat Section ; Measurement Standard: DASY5 (IEEE/IEC/ANSI C63.19-2011)

DASY Configuration:

- Probe: ES3DV3 - SN3250; ConvF(7.64, 7.64, 7.64); Calibrated: 3/13/2018;
- Sensor-Surface: 3mm (Mechanical Surface Detection)
- Electronics: DAE4 Sn874; Calibrated: 8/21/2017
- Phantom: ELI 4.0; Type: QD OVA 001 BB; Serial: 1057
- DASY52 52.10.0(1446); SEMCAD X 14.6.10(7417)

Configuration Head for IC-F1100DT/Head Front, P=5W, d=25mm/Zoom Scan (7x7x7) (7x7x7)/Cube 0: Measurement grid: dx=5mm, dy=5mm, dz=5mm
Reference Value = 17.37 V/m; Power Drift = -0.67 dB
Peak SAR (extrapolated) = 0.348 W/kg
SAR(1 g) = 0.244 W/kg; SAR(10 g) = 0.185 W/kg (SAR corrected for target medium)
Maximum value of SAR (measured) = 0.271 W/kg

Configuration Head for IC-F1100DT/Head Front, P=5W, d=25mm/Area Scan (61x101x1): Interpolated grid: dx=1.500 mm, dy=1.500 mm
Maximum value of SAR (interpolated) = 0.287 W/kg

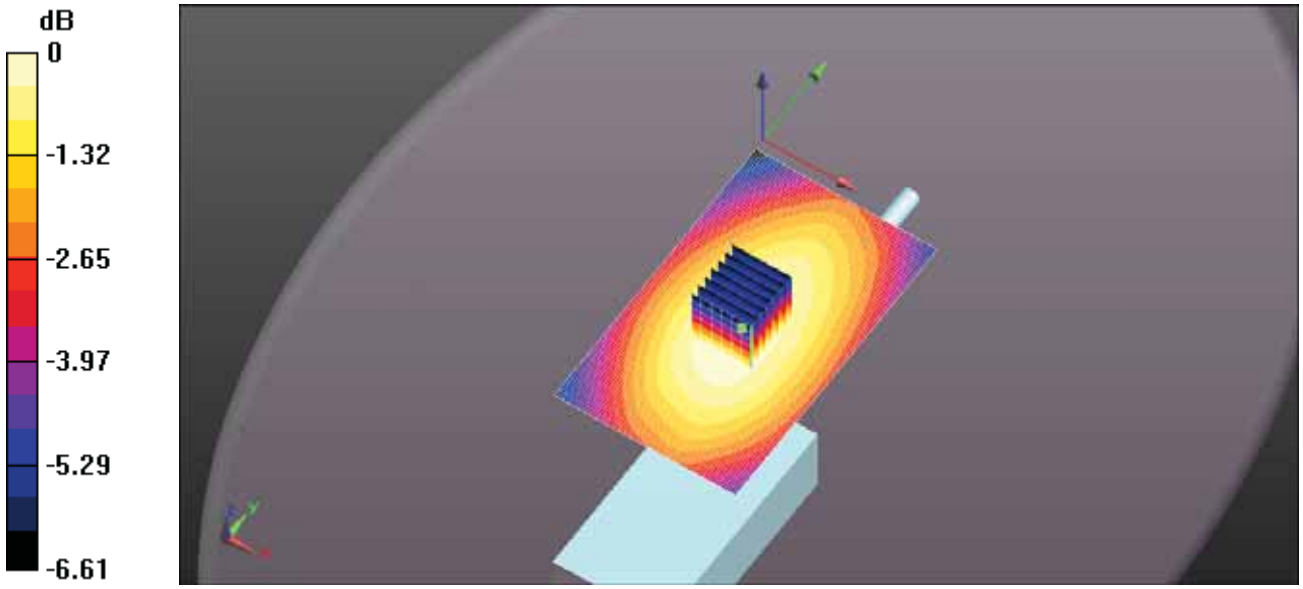

0 dB = 0.271 W/kg = -5.67 dBW/kg

Test Laboratory: Ultratech Group of Labs

FILE NAME: ICOM-489Q HEAD FA-SC61VC 133MM 161.3MHZ.DA52:0

DUT: IC-F1100DT; Type: VHF Receiver; Serial: 32000201-0

Communication System: UID 10000, CW; Frequency: 161.3 MHz; Duty Cycle: 1:1
Medium parameters used: f = 162 MHz; σ = 0.803 S/m; ε_r = 54.448; ρ = 1000 kg/m^3 ; Phantom section: Flat Section ; Measurement Standard: DASY5 (IEEE/IEC/ANSI C63.19-2011)

DASY Configuration:

- Probe: ES3DV3 - SN3250; ConvF(7.64, 7.64, 7.64); Calibrated: 3/13/2018;
- Sensor-Surface: 3mm (Mechanical Surface Detection)
- Electronics: DAE4 Sn874; Calibrated: 8/21/2017
- Phantom: ELI 4.0; Type: QD OVA 001 BB; Serial: 1057
- DASY52 52.10.0(1446); SEMCAD X 14.6.10(7417)

Configuration Head for IC-F1100DT/Head Front, P=5W, d=25mm/Zoom Scan (7x7x7) (7x7x7)/Cube 0: Measurement grid: dx=5mm, dy=5mm, dz=5mm
Reference Value = 16.53 V/m; Power Drift = 0.43 dB
Peak SAR (extrapolated) = 0.403 W/kg
SAR(1 g) = 0.282 W/kg; SAR(10 g) = 0.213 W/kg (SAR corrected for target medium)
Maximum value of SAR (measured) = 0.313 W/kg

Configuration Head for IC-F1100DT/Head Front, P=5W, d=25mm/Area Scan (61x101x1): Interpolated grid: dx=1.500 mm, dy=1.500 mm
Maximum value of SAR (interpolated) = 0.290 W/kg

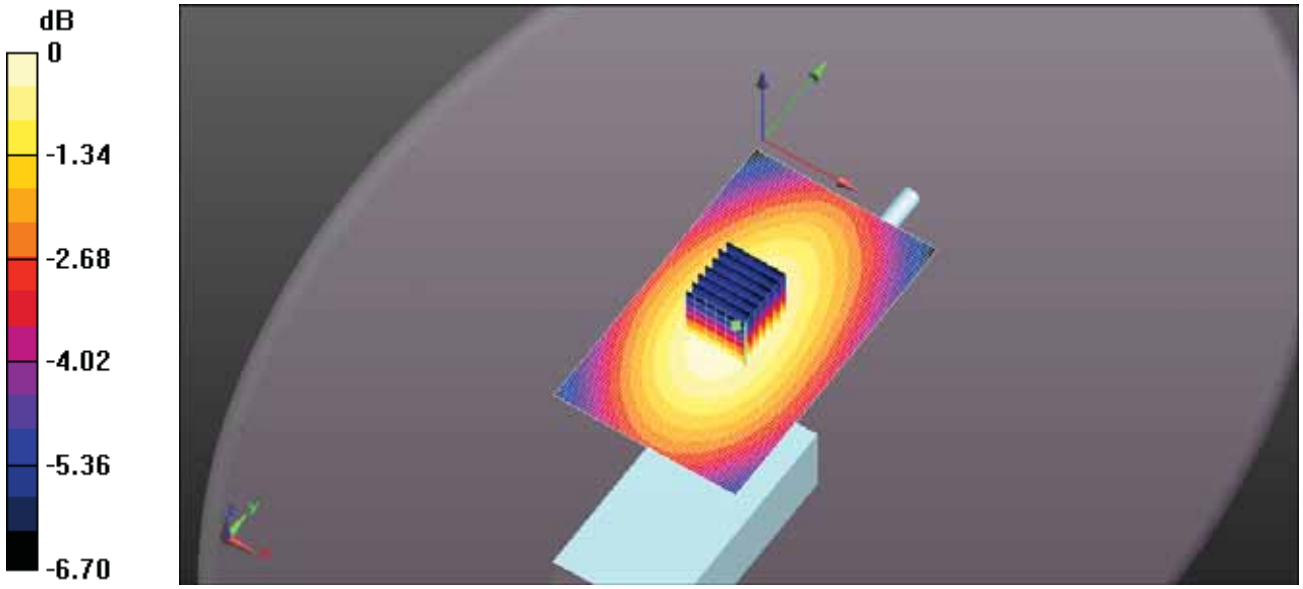

0 dB = 0.313 W/kg = -5.04 dBW/kg

Test Laboratory: Ultratech Group of Labs

FILE NAME: ICOM-489Q HEAD FA-SC61VC 133MM 167.7MHZ.DA52:0

DUT: IC-F1100DT; Type: VHF Receiver; Serial: 32000201-0

Communication System: UID 10000, CW; Frequency: 167.7 MHz; Duty Cycle: 1:1
Medium parameters used: f = 168 MHz; σ = 0.81 S/m; ε_r = 54.329; ρ = 1000 kg/m^3 ; Phantom section: Flat Section ; Measurement Standard: DASY5 (IEEE/IEC/ANSI C63.19-2011)

DASY Configuration:

- Probe: ES3DV3 - SN3250; ConvF(7.64, 7.64, 7.64); Calibrated: 3/13/2018;
- Sensor-Surface: 3mm (Mechanical Surface Detection)
- Electronics: DAE4 Sn874; Calibrated: 8/21/2017
- Phantom: ELI 4.0; Type: QD OVA 001 BB; Serial: 1057
- DASY52 52.10.0(1446); SEMCAD X 14.6.10(7417)

Configuration Head for IC-F1100DT/Head Front, P=5W, d=25mm/Zoom Scan (7x7x7) (7x7x7)/Cube 0: Measurement grid: dx=5mm, dy=5mm, dz=5mm
Reference Value = 20.85 V/m; Power Drift = 0.65 dB
Peak SAR (extrapolated) = 0.692 W/kg
SAR(1 g) = 0.482 W/kg; SAR(10 g) = 0.364 W/kg (SAR corrected for target medium)
Maximum value of SAR (measured) = 0.539 W/kg

Configuration Head for IC-F1100DT/Head Front, P=5W, d=25mm/Area Scan (61x101x1): Interpolated grid: dx=1.500 mm, dy=1.500 mm
Maximum value of SAR (interpolated) = 0.477 W/kg

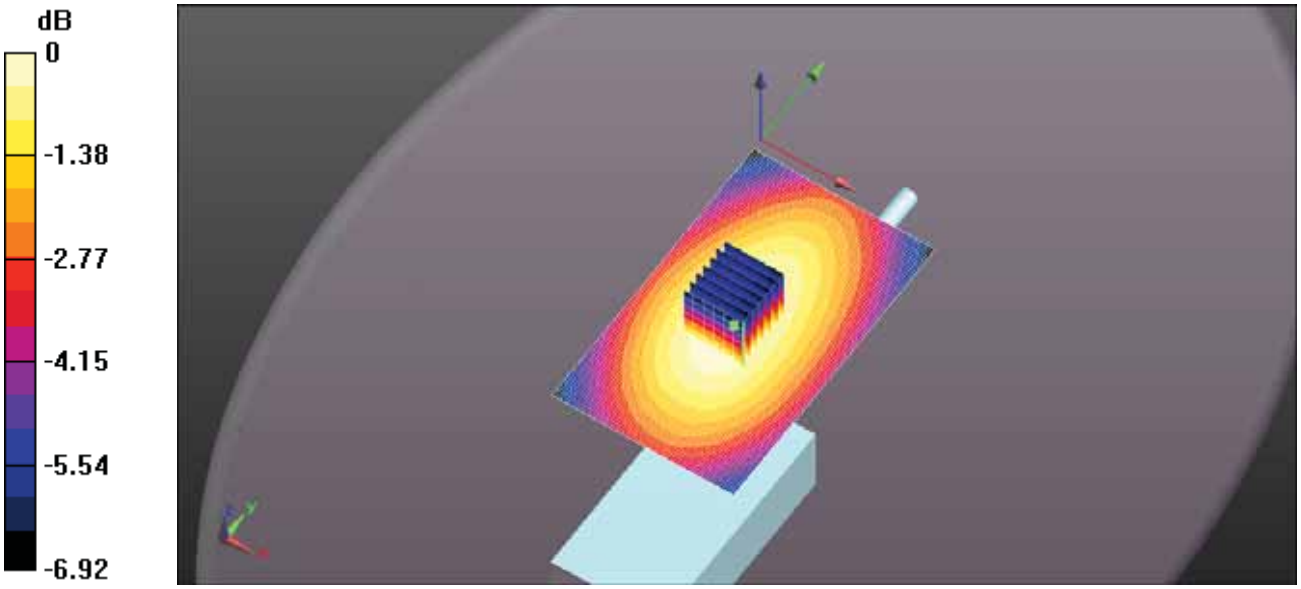

0 dB = 0.539 W/kg = -2.69 dBW/kg

Test Laboratory: Ultratech Group of Labs

FILE NAME: ICOM-489Q HEAD FA-SC61VC 133MM 174MHZ.DA52:0

DUT: IC-F1100DT; Type: VHF Receiver; Serial: 32000201-0

Communication System: UID 10000, CW; Frequency: 174 MHz; Duty Cycle: 1:1
Medium parameters used: f = 174 MHz; σ = 0.818 S/m; ε_r = 54.228; ρ = 1000 kg/m^3 ; Phantom section: Flat Section ; Measurement Standard: DASY5 (IEEE/IEC/ANSI C63.19-2011)

DASY Configuration:

- Probe: ES3DV3 - SN3250; ConvF(7.64, 7.64, 7.64); Calibrated: 3/13/2018;
- Sensor-Surface: 3mm (Mechanical Surface Detection)
- Electronics: DAE4 Sn874; Calibrated: 8/21/2017
- Phantom: ELI 4.0; Type: QD OVA 001 BB; Serial: 1057
- DASY52 52.10.0(1446); SEMCAD X 14.6.10(7417)

Configuration Head for IC-F1100DT/Head Front, P=5W, d=25mm/Zoom Scan (7x7x7) (7x7x7)/Cube 0: Measurement grid: dx=5mm, dy=5mm, dz=5mm
Reference Value = 30.70 V/m; Power Drift = 0.22 dB
Peak SAR (extrapolated) = 1.44 W/kg
SAR(1 g) = 1 W/kg; SAR(10 g) = 0.757 W/kg (SAR corrected for target medium)
Maximum value of SAR (measured) = 1.12 W/kg

Configuration Head for IC-F1100DT/Head Front, P=5W, d=25mm/Area Scan (61x101x1): Interpolated grid: dx=1.500 mm, dy=1.500 mm
Maximum value of SAR (interpolated) = 1.07 W/kg

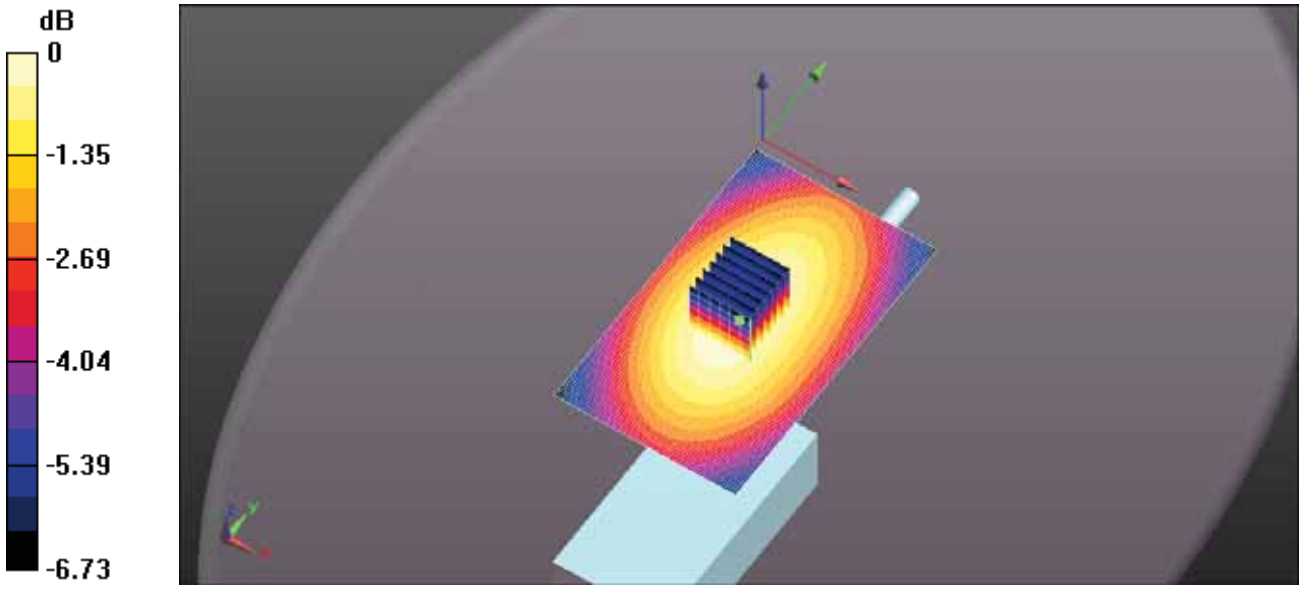

0 dB = 1.12 W/kg = 0.47 dBW/kg

EXHIBIT 3. BODY SAR MEASUREMENTS

Antenna	Power (W)	CH	CH. Freq	BODY SAR1g (W/Kg)	BODY SAR10g (W/Kg)	Power Drift
				BP-280	BP-280	
			(MHz)	2400mAh	2400mAh	(dBm)
FA-SC25V 136-150 MHz	4.88	1	136	0.35	0.26	-0.25
	5.29	5	143	0.20	0.15	0.05
	5.18	10	150	0.07	0.05	-0.34
FA-SC28V 148-162 MHz	5.28	8	148	0.30	0.23	-0.79
	4.88	11	155	0.09	0.06	-0.25
	4.85	15	162	0.03	0.02	0
FA-SC29V 160-174 MHz	4.88	13	160	0.09	0.07	-0.34
	4.80	16	167	0.15	0.10	1.26
	4.75	19	174	0.05	0.04	0.77
FA-SC55V 150-174 MHz	5.18	10	150	0.31	0.22	-0.43
	4.89	12	156	0.12	0.08	-0.27
	4.85	15	162	0.22	0.15	-0.15
	4.80	18	168	0.14	0.10	0.65
	4.75	19	174	0.14	0.11	0.73
FA-SC26VS 136-144 MHz	4.88	1	136	0.13	0.08	-1.55
	5.21	2	140	0.12	0.08	-0.44
	4.88	11	155	0.01	0.01	0.06
FA-SC27VS 142-150 MHz	5.27	3	142	0.24	0.16	-1.04
	5.28	7	146	0.14	0.09	-0.36
	5.18	10	150	0.09	0.06	-0.24
FA-SC56VS 150-162 MHz	5.18	10	150	0.06	0.04	-0.28
	4.89	12	156	0.03	0.02	0.06
	4.85	15	162	0.02	0.01	-0.56
FA-SC57VS 160-174 MHz	4.88	13	160	0.15	0.09	-0.74
	4.80	16	167	0.10	0.06	0.85
	4.75	19	174	0.09	0.06	0.76

Antenna	Power (W)	CH	CH. Freq	BODY SAR1g (W/Kg)	BODY SAR10g (W/Kg)	Power Drift
				BP-280	BP-280	
			(MHz)	2400mAh	2400mAh	(dBm)
FA-S61VC 136MHz 174mm	4.88	1	136	0.32	0.24	0.01
	5.29	4	142.3	0.16	0.12	-0.2
	5.24	9	148.7	0.08	0.06	-0.11
	4.88	11	155	0.05	0.03	-0.1
	4.88	14	161.3	0.02	0.01	-0.31
	4.79	17	167.7	0.06	0.05	0.83
	4.75	19	174	0.08	0.06	0.83
FA-S61VC 140MHz 169mm	4.88	1	136	0.30	0.22	-0.39
	5.29	4	142.3	0.16	0.12	-0.75
	5.24	9	148.7	0.08	0.06	-0.95
	4.88	11	155	0.04	0.03	-0.53
	4.88	14	161.3	0.03	0.02	-0.13
	4.79	17	167.7	0.06	0.05	-0.09
	4.75	19	174	0.41	0.31	0.03
FA-S61VC 145MHz 163mm	4.88	1	136	0.61	0.46	-0.06
	5.29	4	142.3	0.37	0.27	0.02
	5.24	9	148.7	0.23	0.17	0.01
	4.88	11	155	0.11	0.08	-0.1
	4.88	14	161.3	0.04	0.03	-0.11
	4.79	17	167.7	0.06	0.04	-1.9
	4.75	19	174	0.09	0.07	0.4
FA-S61VC 150MHz 157mm	4.88	1	136	0.53	0.39	-0.15
	5.29	4	142.3	0.44	0.32	-0.03
	5.24	9	148.7	0.29	0.22	-0.07
	4.88	11	155	0.09	0.06	-0.1
	4.88	14	161.3	0.22	0.15	0.18
	4.79	17	167.7	0.03	0.19	0.86
	4.75	19	174	0.14	0.10	0.56
FA-S61VC 155MHz 151mm	4.88	1	136	0.21	0.16	0.33
	5.29	4	142.3	0.25	0.18	-0.1
	5.24	9	148.7	0.41	0.30	-0.06
	4.88	11	155	0.29	0.21	-0.16
	4.88	14	161.3	0.15	0.10	-0.1
	4.79	17	167.7	0.60	0.45	1.91
	4.75	19	174	0.25	0.18	0.82

Antenna	Power (W)	CH	CH. Freq	BODY SAR1g (W/Kg)	BODY SAR10g (W/Kg)	Power Drift
				BP-280	BP-280	
			(MHz)	2400mAh	2400mAh	(dBm)
FA-S61VC 160MHz 146mm	4.88	1	136	0.19	0.14	0.21
	5.29	4	142.3	0.24	0.18	-0.16
	5.24	9	148.7	0.44	0.32	-0.02
	4.88	11	155	0.31	0.22	-0.16
	4.88	14	161.3	0.07	0.05	-0.22
	4.79	17	167.7	0.23	0.17	0.19
	4.75	19	174	0.17	0.13	1.08
FA-S61VC 165MHz 141mm	4.88	1	136	0.21	0.16	0.26
	5.29	4	142.3	0.23	0.17	-0.1
	5.24	9	148.7	0.24	0.18	-0.15
	4.88	11	155	0.37	0.27	-0.01
	4.88	14	161.3	0.17	0.12	-0.04
	4.79	17	167.7	0.11	0.11	0.4
	4.75	19	174	0.26	0.19	0.99
FA-S61VC 170MHz 137mm	4.88	1	136	0.11	0.08	0.48
	5.29	4	142.3	0.12	0.09	-0.09
	5.24	9	148.7	0.17	0.13	-0.17
	4.88	11	155	0.25	0.18	-0.06
	4.88	14	161.3	0.25	0.18	-0.25
	4.79	17	167.7	0.26	0.18	0.75
	4.75	19	174	0.19	0.13	0.49
FA-S61VC 175MHz 133mm	4.88	1	136	0.09	0.07	0.45
	5.29	4	142.3	0.10	0.08	-0.07
	5.24	9	148.7	0.14	0.10	-0.14
	4.88	11	155	0.22	0.16	-0.04
	4.88	14	161.3	0.21	0.15	-0.19
	4.79	17	167.7	0.43	0.33	0.79
	4.75	19	174	0.26	0.19	1.04

Test Laboratory: Ultratech Group of Labs

FILE NAME: ICOM-489Q BODY FA-SC25V 136MHZ BP-278.DA52:0

DUT: IC-F1100DT; Type: VHF Receiver; Serial: 32000201-0

Communication System: UID 10000, CW; Frequency: 136 MHz; Duty Cycle: 1:1
Medium parameters used: f = 136 MHz; σ = 0.835 S/m; ε_r = 63.621; ρ = 1000 kg/m^3 ; Phantom section: Flat Section ; Measurement Standard: DASY5 (IEEE/IEC/ANSI C63.19-2011)

DASY Configuration:

- Probe: ES3DV3 - SN3250; ConvF(7.29, 7.29, 7.29); Calibrated: 3/13/2018;
- Sensor-Surface: 3mm (Mechanical Surface Detection)
- Electronics: DAE4 Sn874; Calibrated: 8/21/2017
- Phantom: ELI 4.0; Type: QD OVA 001 BB; Serial: 1057
- DASY52 52.10.0(1446); SEMCAD X 14.6.10(7417)

Configuration Body for IC-F1100DT/Body Back, P=5W, d=0mm/Zoom Scan (7x7x7) (7x8x7)/Cube 0: Measurement grid: dx=5mm, dy=5mm, dz=5mm
Reference Value = 47.26 V/m; Power Drift = -0.75 dB
Peak SAR (extrapolated) = 2.42 W/kg
SAR(1 g) = 1.49 W/kg; SAR(10 g) = 1.07 W/kg (SAR corrected for target medium)
Maximum value of SAR (measured) = 1.69 W/kg

Configuration Body for IC-F1100DT/Body Back, P=5W, d=0mm/Area Scan (61x101x1):
Interpolated grid: dx=1.500 mm, dy=1.500 mm
Maximum value of SAR (interpolated) = 1.77 W/kg

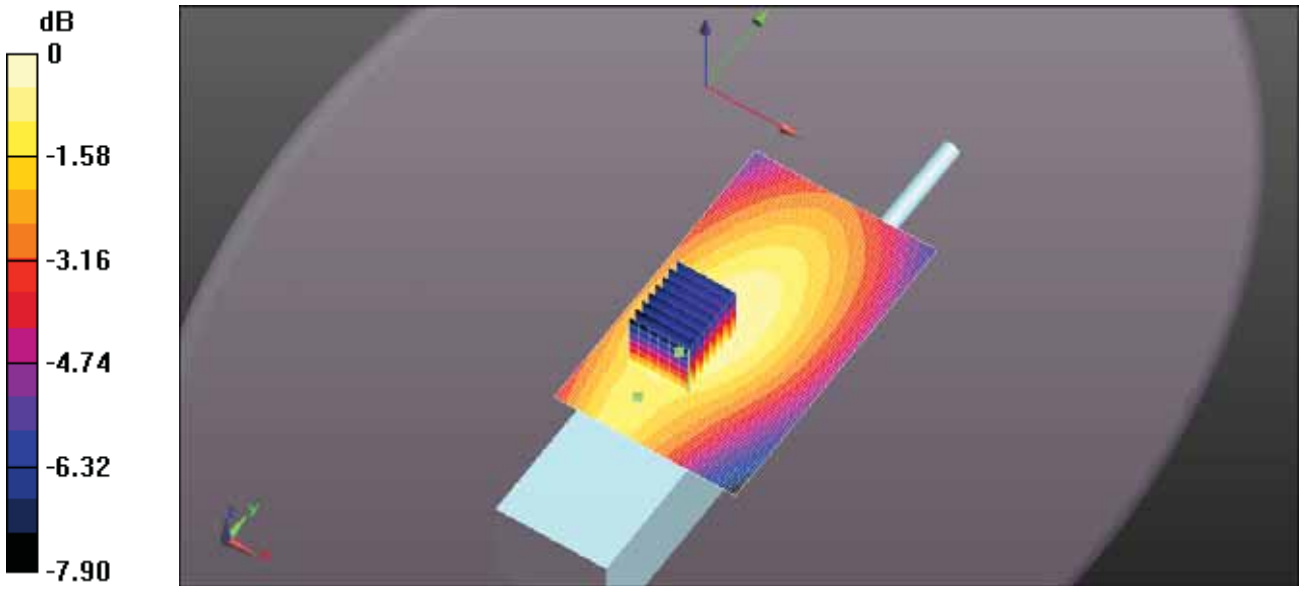

0 dB = 1.69 W/kg = 2.27 dBW/kg

Test Laboratory: Ultratech Group of Labs

FILE NAME: ICOM-489Q BODY FA-SC25V 136MHZ BP-279.DA52:0

DUT: IC-F1100DT; Type: VHF Receiver; Serial: 32000201-0

Communication System: UID 10000, CW; Frequency: 136 MHz; Duty Cycle: 1:1
Medium parameters used: f = 136 MHz; σ = 0.835 S/m; ε_r = 63.621; ρ = 1000 kg/m^3 ; Phantom section: Flat Section ; Measurement Standard: DASY5 (IEEE/IEC/ANSI C63.19-2011)

DASY Configuration:

- Probe: ES3DV3 - SN3250; ConvF(7.29, 7.29, 7.29); Calibrated: 3/13/2018;
- Sensor-Surface: 3mm (Mechanical Surface Detection)
- Electronics: DAE4 Sn874; Calibrated: 8/21/2017
- Phantom: ELI 4.0; Type: QD OVA 001 BB; Serial: 1057
- DASY52 52.10.0(1446); SEMCAD X 14.6.10(7417)

Configuration Body for IC-F1100DT/Body Back, P=5W, d=0mm/Zoom Scan (7x7x7) (7x7x7)/Cube 0: Measurement grid: dx=5mm, dy=5mm, dz=5mm
Reference Value = 47.71 V/m; Power Drift = -0.43 dB
Peak SAR (extrapolated) = 2.64 W/kg
SAR(1 g) = 1.62 W/kg; SAR(10 g) = 1.17 W/kg (SAR corrected for target medium)
Maximum value of SAR (measured) = 1.85 W/kg

Configuration Body for IC-F1100DT/Body Back, P=5W, d=0mm/Area Scan (61x111x1):
Interpolated grid: dx=1.500 mm, dy=1.500 mm
Maximum value of SAR (interpolated) = 1.87 W/kg

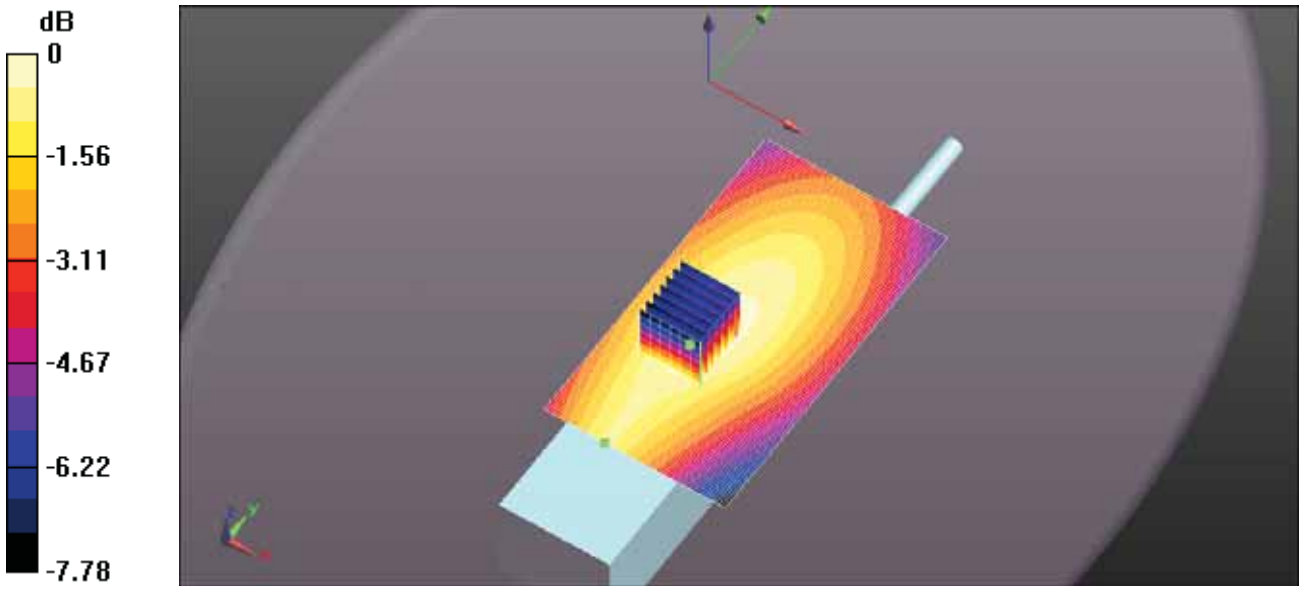

0 dB = 1.85 W/kg = 2.66 dBW/kg

Test Laboratory: Ultratech Group of Labs

FILE NAME: ICOM-489Q BODY FA-SC25V 136MHZ BP-280.DA52:0

DUT: IC-F1100DT; Type: VHF Receiver; Serial: 32000201-0

Communication System: UID 10000, CW; Frequency: 136 MHz; Duty Cycle: 1:1
Medium parameters used: f = 136 MHz; σ = 0.835 S/m; ε_r = 63.621; ρ = 1000 kg/m^3 ; Phantom section: Flat Section ; Measurement Standard: DASY5 (IEEE/IEC/ANSI C63.19-2011)

DASY Configuration:

- Probe: ES3DV3 - SN3250; ConvF(7.29, 7.29, 7.29); Calibrated: 3/13/2018;
- Sensor-Surface: 3mm (Mechanical Surface Detection)
- Electronics: DAE4 Sn874; Calibrated: 8/21/2017
- Phantom: ELI 4.0; Type: QD OVA 001 BB; Serial: 1057
- DASY52 52.10.0(1446); SEMCAD X 14.6.10(7417)

Configuration Body for IC-F1100DT/Body Back, P=5W, d=0mm/Zoom Scan (7x7x7) (8x8x7)/Cube 0: Measurement grid: dx=5mm, dy=5mm, dz=5mm
Reference Value = 51.36 V/m; Power Drift = -0.68 dB
Peak SAR (extrapolated) = 2.76 W/kg
SAR(1 g) = 1.74 W/kg; SAR(10 g) = 1.28 W/kg (SAR corrected for target medium)
Maximum value of SAR (measured) = 1.97 W/kg

Configuration Body for IC-F1100DT/Body Back, P=5W, d=0mm/Area Scan (61x111x1):
Interpolated grid: dx=1.500 mm, dy=1.500 mm
Maximum value of SAR (interpolated) = 2.02 W/kg

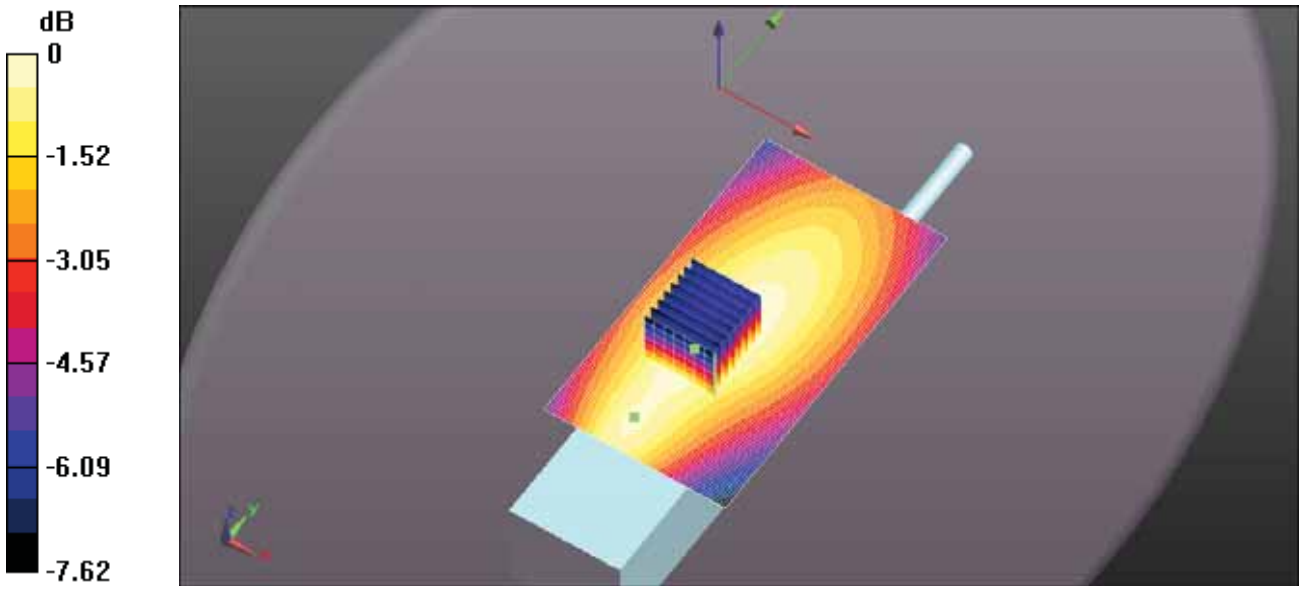

0 dB = 1.97 W/kg = 2.94 dBW/kg

Test Laboratory: Ultratech Group of Labs

FILE NAME: ICOM-489Q BODY FA-SC25V 136MHZ BP-280 HM-158LA.DA52:0

DUT: IC-F1100DT; Type: VHF Receiver; Serial: 32000201-0

Communication System: UID 10000, CW; Frequency: 136 MHz; Duty Cycle: 1:1
Medium parameters used: f = 136 MHz; σ = 0.835 S/m; ε_r = 63.621; ρ = 1000 kg/m^3 ; Phantom section: Flat Section ; Measurement Standard: DASY5 (IEEE/IEC/ANSI C63.19-2011)

DASY Configuration:

- Probe: ES3DV3 - SN3250; ConvF(7.29, 7.29, 7.29); Calibrated: 3/13/2018;
- Sensor-Surface: 3mm (Mechanical Surface Detection)
- Electronics: DAE4 Sn874; Calibrated: 8/21/2017
- Phantom: ELI 4.0; Type: QD OVA 001 BB; Serial: 1057
- DASY52 52.10.0(1446); SEMCAD X 14.6.10(7417)

Configuration Body for IC-F1100DT/Body Back, P=5W, d=0mm/Zoom Scan (7x7x7) (7x8x7)/Cube 0: Measurement grid: dx=5mm, dy=5mm, dz=5mm
Reference Value = 20.52 V/m; Power Drift = -0.59 dB
Peak SAR (extrapolated) = 0.504 W/kg
SAR(1 g) = 0.339 W/kg; SAR(10 g) = 0.248 W/kg (SAR corrected for target medium)
Maximum value of SAR (measured) = 0.382 W/kg

Configuration Body for IC-F1100DT/Body Back, P=5W, d=0mm/Area Scan (61x111x1):
Interpolated grid: dx=1.500 mm, dy=1.500 mm
Maximum value of SAR (interpolated) = 0.384 W/kg

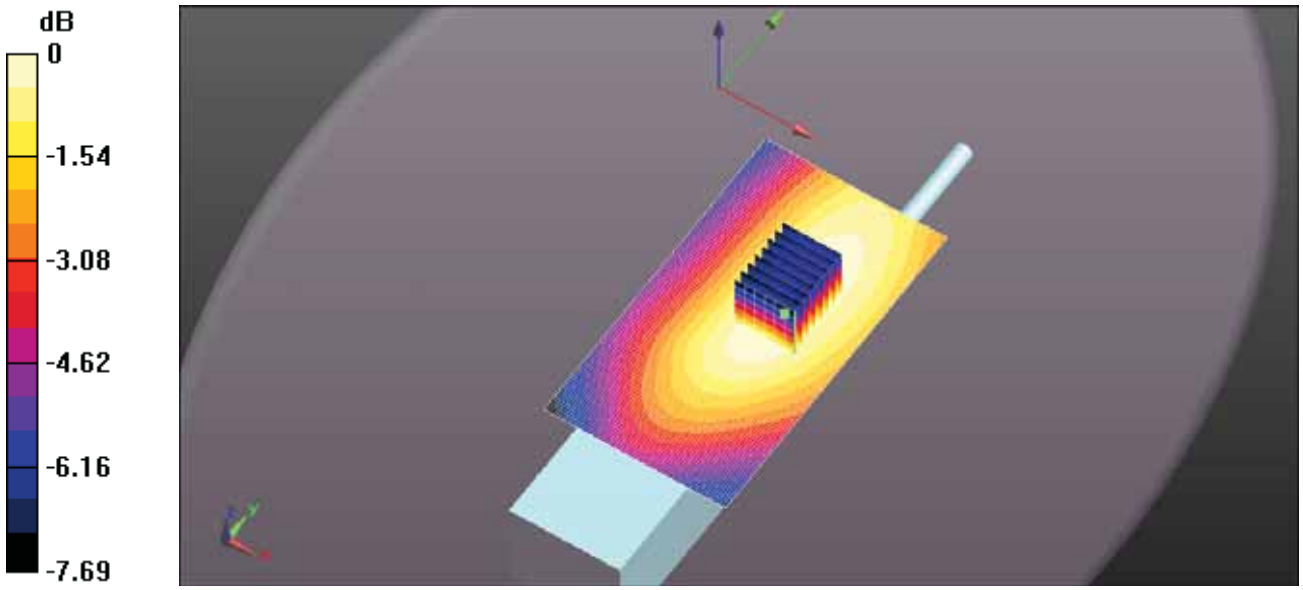

0 dB = 0.382 W/kg = -4.18 dBW/kg

Test Laboratory: Ultratech Group of Labs

FILE NAME: ICOM-489Q BODY FA-SC25V 136MHZ BP-280 HS-94.DA52:0

DUT: IC-F1100DT; Type: VHF Receiver; Serial: 32000201-0

Communication System: UID 10000, CW; Frequency: 136 MHz; Duty Cycle: 1:1
Medium parameters used: f = 136 MHz; σ = 0.835 S/m; ε_r = 63.621; ρ = 1000 kg/m^3 ; Phantom section: Flat Section ; Measurement Standard: DASY5 (IEEE/IEC/ANSI C63.19-2011)

DASY Configuration:

- Probe: ES3DV3 - SN3250; ConvF(7.29, 7.29, 7.29); Calibrated: 3/13/2018;
- Sensor-Surface: 3mm (Mechanical Surface Detection)
- Electronics: DAE4 Sn874; Calibrated: 8/21/2017
- Phantom: ELI 4.0; Type: QD OVA 001 BB; Serial: 1057
- DASY52 52.10.0(1446); SEMCAD X 14.6.10(7417)

Configuration Body for IC-F1100DT/Body Back, P=5W, d=0mm/Zoom Scan (7x7x7) (7x7x7)/Cube 0: Measurement grid: dx=5mm, dy=5mm, dz=5mm
Reference Value = 34.74 V/m; Power Drift = -0.25 dB
Peak SAR (extrapolated) = 1.32 W/kg
SAR(1 g) = 0.901 W/kg; SAR(10 g) = 0.668 W/kg (SAR corrected for target medium)
Maximum value of SAR (measured) = 1.02 W/kg

Configuration Body for IC-F1100DT/Body Back, P=5W, d=0mm/Area Scan (61x111x1):
Interpolated grid: dx=1.500 mm, dy=1.500 mm
Maximum value of SAR (interpolated) = 1.01 W/kg

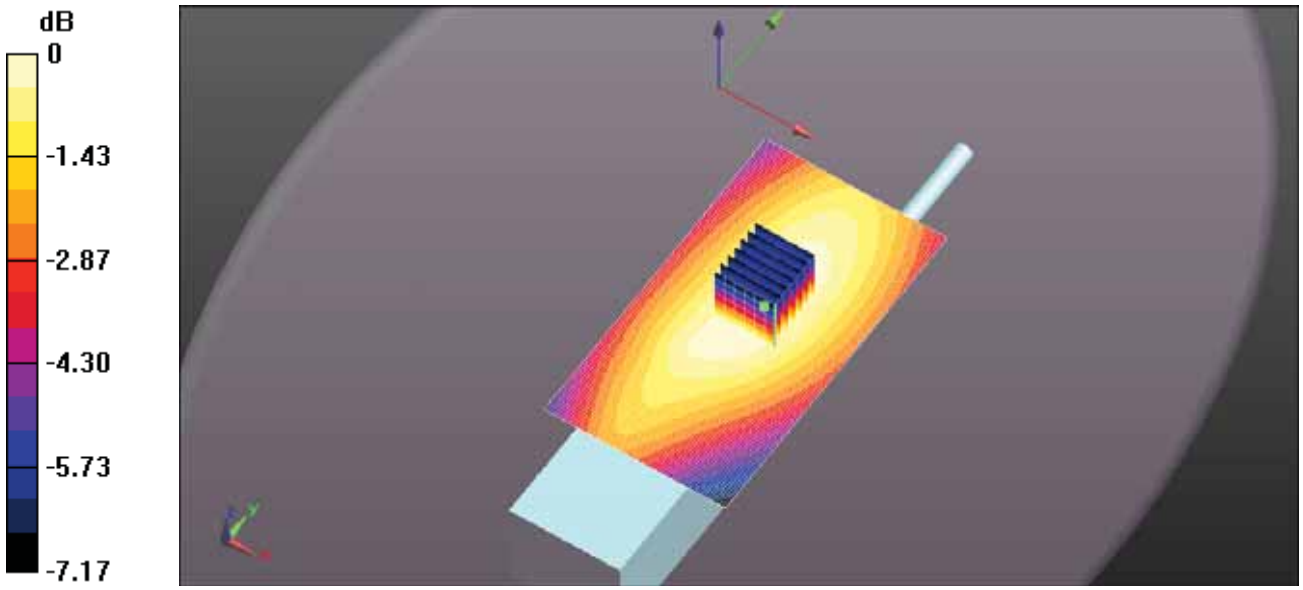

0 dB = 1.02 W/kg = 0.07 dBW/kg

Test Laboratory: Ultratech Group of Labs

FILE NAME: ICOM-489Q BODY FA-SC25V 143MHZ.DA52:0

DUT: IC-F1100DT; Type: VHF Receiver; Serial: 32000201-0

Communication System: UID 10000, CW; Frequency: 143 MHz; Duty Cycle: 1:1
Medium parameters used (interpolated): f = 143 MHz; σ = 0.836 S/m; ε_r = 63.765; ρ = 1000 kg/m^3 ;
Phantom section: Flat Section ; Measurement Standard: DASY5 (IEEE/IEC/ANSI C63.19-2011)

DASY Configuration:

- Probe: ES3DV3 - SN3250; ConvF(7.29, 7.29, 7.29); Calibrated: 3/13/2018;
- Sensor-Surface: 3mm (Mechanical Surface Detection)
- Electronics: DAE4 Sn874; Calibrated: 8/21/2017
- Phantom: ELI 4.0; Type: QD OVA 001 BB; Serial: 1057
- DASY52 52.10.0(1446); SEMCAD X 14.6.10(7417)

Configuration Body for IC-F1100DT/Body Back, P=5W, d=0mm/Zoom Scan (7x7x7) (7x7x7)/Cube 0: Measurement grid: dx=5mm, dy=5mm, dz=5mm
Reference Value = 25.12 V/m; Power Drift = 0.05 dB
Peak SAR (extrapolated) = 0.767 W/kg
SAR(1 g) = 0.524 W/kg; SAR(10 g) = 0.387 W/kg (SAR corrected for target medium)
Maximum value of SAR (measured) = 0.587 W/kg

Configuration Body for IC-F1100DT/Body Back, P=5W, d=0mm/Area Scan (61x111x1):
Interpolated grid: dx=1.500 mm, dy=1.500 mm
Maximum value of SAR (interpolated) = 0.582 W/kg

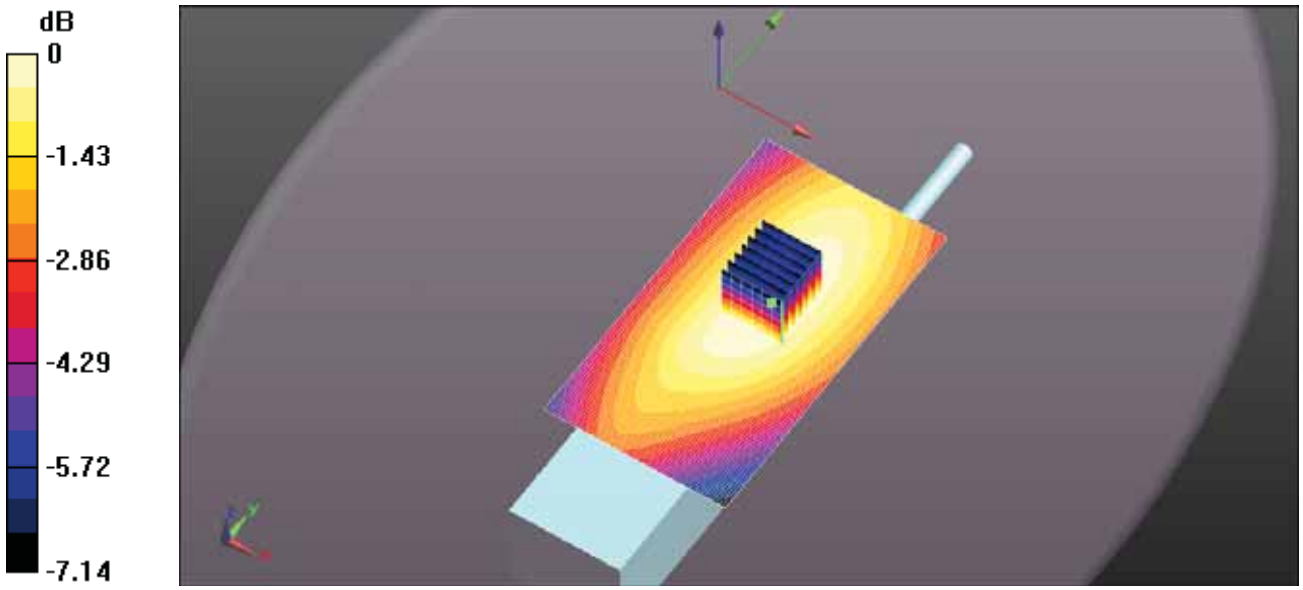

0 dB = 0.587 W/kg = -2.31 dBW/kg

Test Laboratory: Ultratech Group of Labs

FILE NAME: ICOM-489Q BODY FA-SC25V 150MHZ.DA52:0

DUT: IC-F1100DT; Type: VHF Receiver; Serial: 32000201-0

Communication System: UID 10000, CW; Frequency: 150 MHz; Duty Cycle: 1:1
Medium parameters used: f = 150 MHz; σ = 0.837 S/m; ε_r = 63.795; ρ = 1000 kg/m^3 ; Phantom section: Flat Section ; Measurement Standard: DASY5 (IEEE/IEC/ANSI C63.19-2011)

DASY Configuration:

- Probe: ES3DV3 - SN3250; ConvF(7.29, 7.29, 7.29); Calibrated: 3/13/2018;
- Sensor-Surface: 3mm (Mechanical Surface Detection)
- Electronics: DAE4 Sn874; Calibrated: 8/21/2017
- Phantom: ELI 4.0; Type: QD OVA 001 BB; Serial: 1057
- DASY52 52.10.0(1446); SEMCAD X 14.6.10(7417)

Configuration Body for IC-F1100DT/Body Back, P=5W, d=0mm/Zoom Scan (7x7x7) (7x8x7)/Cube 0: Measurement grid: dx=5mm, dy=5mm, dz=5mm
Reference Value = 15.62 V/m; Power Drift = -0.34 dB
Peak SAR (extrapolated) = 0.308 W/kg
SAR(1 g) = 0.203 W/kg; SAR(10 g) = 0.149 W/kg (SAR corrected for target medium)
Maximum value of SAR (measured) = 0.236 W/kg

Configuration Body for IC-F1100DT/Body Back, P=5W, d=0mm/Area Scan (61x111x1):
Interpolated grid: dx=1.500 mm, dy=1.500 mm
Maximum value of SAR (interpolated) = 0.237 W/kg

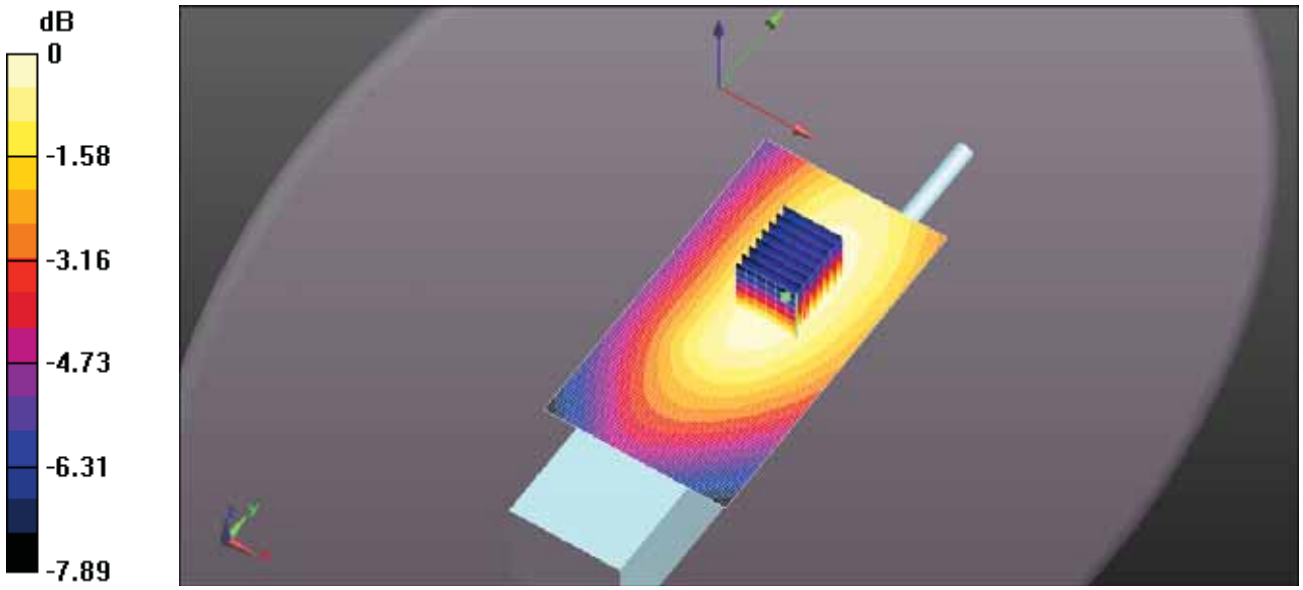

0 dB = 0.236 W/kg = -6.28 dBW/kg

Test Laboratory: Ultratech Group of Labs

FILE NAME: ICOM-489Q BODY FA-SC28V 148MHZ.DA52:0

DUT: IC-F1100DT; Type: VHF Receiver; Serial: 32000201-0

Communication System: UID 10000, CW; Frequency: 148 MHz; Duty Cycle: 1:1
Medium parameters used: f = 148 MHz; σ = 0.837 S/m; ε_r = 63.588; ρ = 1000 kg/m^3 ; Phantom section: Flat Section ; Measurement Standard: DASY5 (IEEE/IEC/ANSI C63.19-2011)

DASY Configuration:

- Probe: ES3DV3 - SN3250; ConvF(7.29, 7.29, 7.29); Calibrated: 3/13/2018;
- Sensor-Surface: 3mm (Mechanical Surface Detection)
- Electronics: DAE4 Sn874; Calibrated: 8/21/2017
- Phantom: ELI 4.0; Type: QD OVA 001 BB; Serial: 1057
- DASY52 52.10.0(1446); SEMCAD X 14.6.10(7417)

Configuration Body for IC-F1100DT/Body Back, P=5W, d=0mm/Zoom Scan (7x7x7) (7x7x7)/Cube 0: Measurement grid: dx=5mm, dy=5mm, dz=5mm
Reference Value = 36.23 V/m; Power Drift = -0.79 dB
Peak SAR (extrapolated) = 1.41 W/kg
SAR(1 g) = 0.964 W/kg; SAR(10 g) = 0.713 W/kg (SAR corrected for target medium)
Maximum value of SAR (measured) = 1.08 W/kg

Configuration Body for IC-F1100DT/Body Back, P=5W, d=0mm/Area Scan (61x111x1):
Interpolated grid: dx=1.500 mm, dy=1.500 mm
Maximum value of SAR (interpolated) = 1.09 W/kg

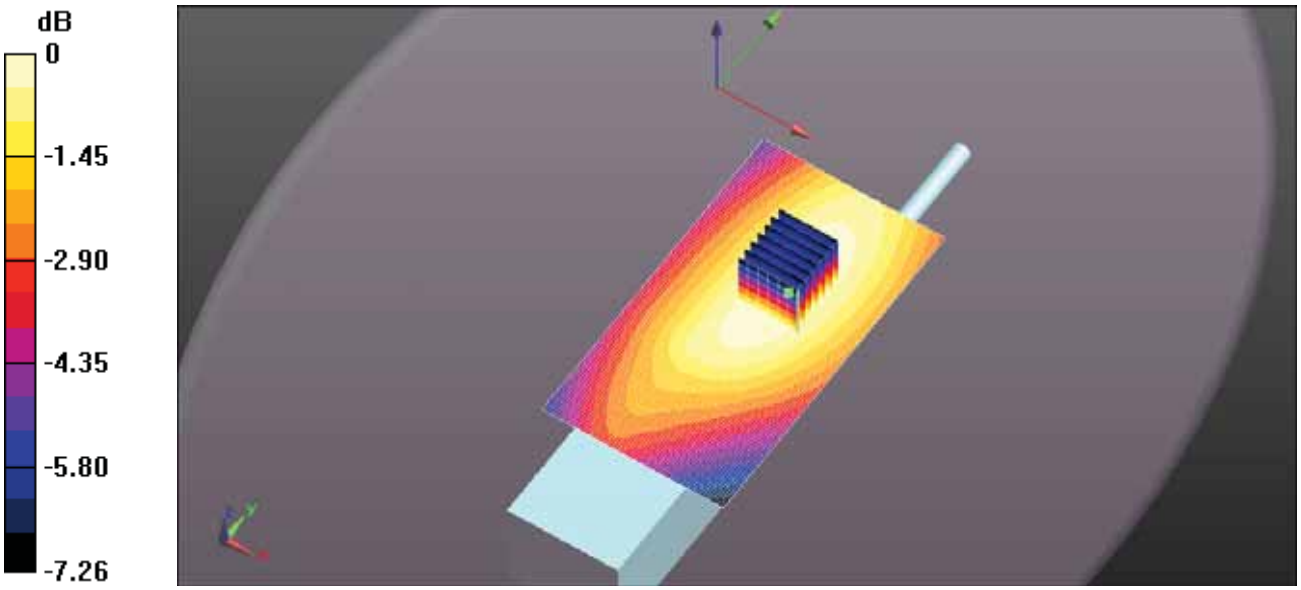

0 dB = 1.08 W/kg = 0.34 dBW/kg

Test Laboratory: Ultratech Group of Labs

FILE NAME: ICOM-489Q BODY FA-SC28V 155MHZ.DA52:0

DUT: IC-F1100DT; Type: VHF Receiver; Serial: 32000201-0

Communication System: UID 10000, CW; Frequency: 155 MHz; Duty Cycle: 1:1
Medium parameters used (interpolated): f = 155 MHz; σ = 0.841 S/m; ε_r = 64.042; ρ = 1000 kg/m^3 ;
Phantom section: Flat Section ; Measurement Standard: DASY5 (IEEE/IEC/ANSI C63.19-2011)

DASY Configuration:

- Probe: ES3DV3 - SN3250; ConvF(7.29, 7.29, 7.29); Calibrated: 3/13/2018;
- Sensor-Surface: 3mm (Mechanical Surface Detection)
- Electronics: DAE4 Sn874; Calibrated: 8/21/2017
- Phantom: ELI 4.0; Type: QD OVA 001 BB; Serial: 1057
- DASY52 52.10.0(1446); SEMCAD X 14.6.10(7417)

Configuration Body for IC-F1100DT/Body Back, P=5W, d=0mm/Zoom Scan (7x7x7) (7x8x7)/Cube 0: Measurement grid: dx=5mm, dy=5mm, dz=5mm
Reference Value = 15.33 V/m; Power Drift = -0.25 dB
Peak SAR (extrapolated) = 0.343 W/kg
SAR(1 g) = 0.231 W/kg; SAR(10 g) = 0.168 W/kg (SAR corrected for target medium)
Maximum value of SAR (measured) = 0.261 W/kg

Configuration Body for IC-F1100DT/Body Back, P=5W, d=0mm/Area Scan (61x111x1):
Interpolated grid: dx=1.500 mm, dy=1.500 mm
Maximum value of SAR (interpolated) = 0.263 W/kg

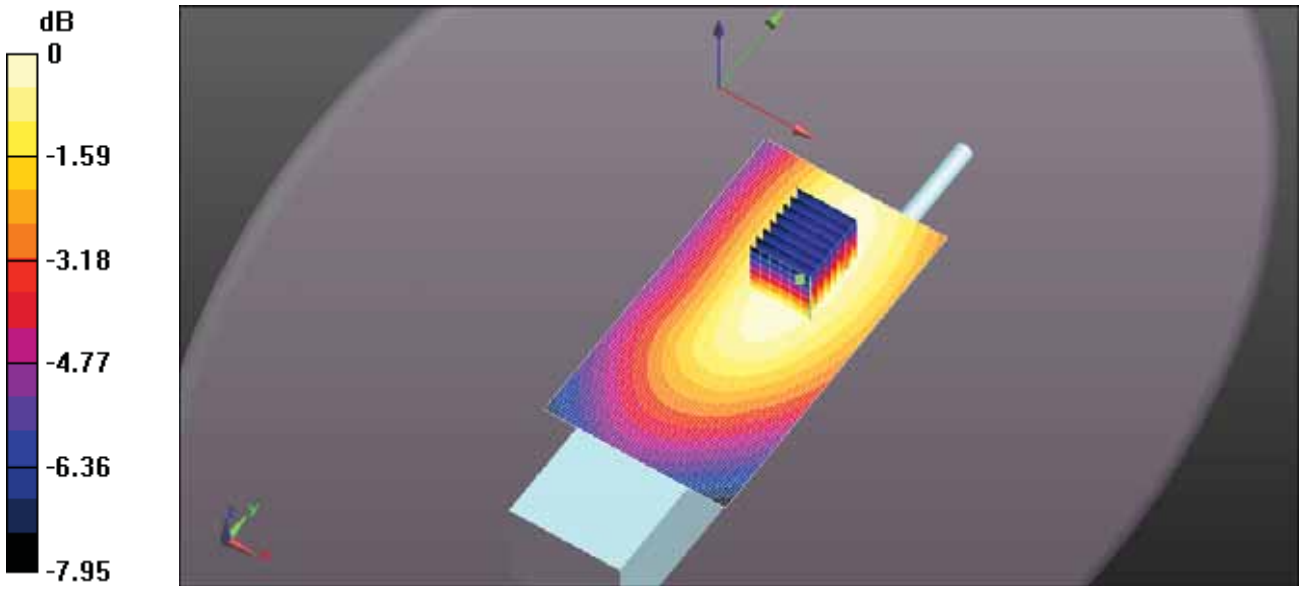

0 dB = 0.261 W/kg = -5.84 dBW/kg

Test Laboratory: Ultratech Group of Labs

FILE NAME: ICOM-489Q BODY FA-SC28V 162MHZ.DA52:0

DUT: IC-F1100DT; Type: VHF Receiver; Serial: 32000201-0

Communication System: UID 10000, CW; Frequency: 162 MHz; Duty Cycle: 1:1
Medium parameters used: f = 162 MHz; σ = 0.843 S/m; ε_r = 64.096; ρ = 1000 kg/m^3 ; Phantom section: Flat Section ; Measurement Standard: DASY5 (IEEE/IEC/ANSI C63.19-2011)

DASY Configuration:

- Probe: ES3DV3 - SN3250; ConvF(7.29, 7.29, 7.29); Calibrated: 3/13/2018;
- Sensor-Surface: 3mm (Mechanical Surface Detection)
- Electronics: DAE4 Sn874; Calibrated: 8/21/2017
- Phantom: ELI 4.0; Type: QD OVA 001 BB; Serial: 1057
- DASY52 52.10.0(1446); SEMCAD X 14.6.10(7417)

Configuration Body for IC-F1100DT/Body Back, P=5W, d=0mm/Zoom Scan (7x7x7) (7x7x7)/Cube 0: Measurement grid: dx=5mm, dy=5mm, dz=5mm
Reference Value = 8.243 V/m; Power Drift = 0.00 dB
Peak SAR (extrapolated) = 0.0950 W/kg
SAR(1 g) = 0.063 W/kg; SAR(10 g) = 0.046 W/kg (SAR corrected for target medium)
Maximum value of SAR (measured) = 0.0713 W/kg

Configuration Body for IC-F1100DT/Body Back, P=5W, d=0mm/Area Scan (61x111x1):
Interpolated grid: dx=1.500 mm, dy=1.500 mm
Maximum value of SAR (interpolated) = 0.0720 W/kg

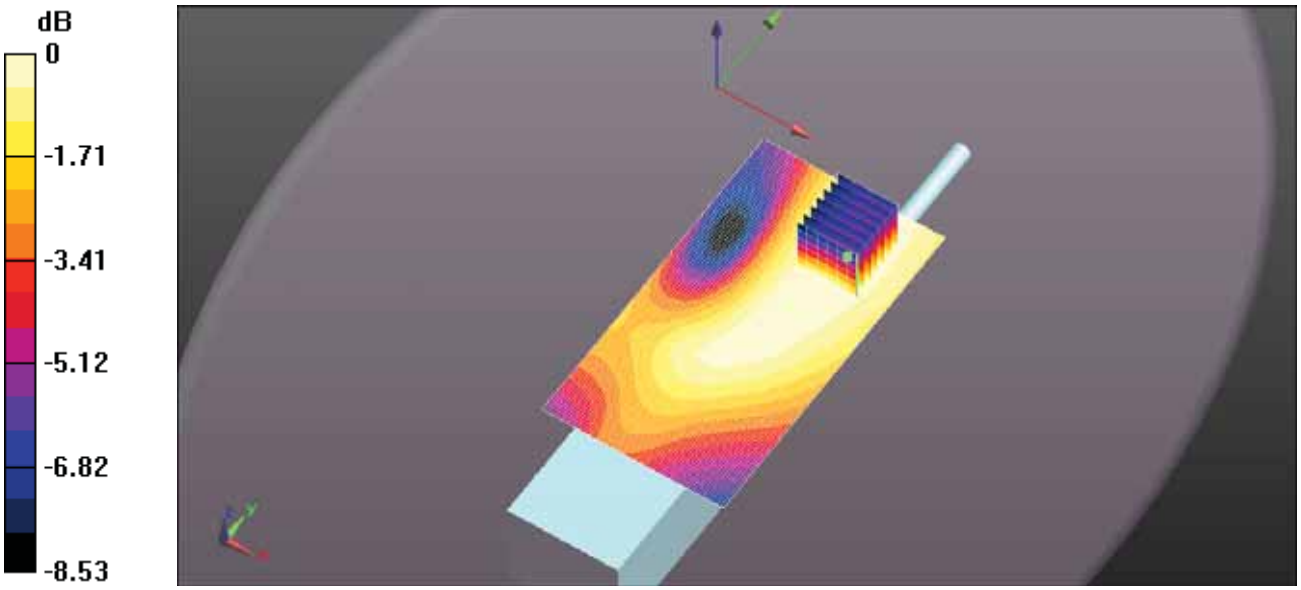

0 dB = 0.0713 W/kg = -11.47 dBW/kg

Test Laboratory: Ultratech Group of Labs

FILE NAME: ICOM-489Q BODY FA-SC29V 160MHZ.DA52:0

DUT: IC-F1100DT; Type: VHF Receiver; Serial: 32000201-0

Communication System: UID 10000, CW; Frequency: 160 MHz; Duty Cycle: 1:1
Medium parameters used: f = 160 MHz; σ = 0.841 S/m; ε_r = 64.05; ρ = 1000 kg/m^3 ; Phantom section: Flat Section ; Measurement Standard: DASY5 (IEEE/IEC/ANSI C63.19-2011)

DASY Configuration:

- Probe: ES3DV3 - SN3250; ConvF(7.29, 7.29, 7.29); Calibrated: 3/13/2018;
- Sensor-Surface: 3mm (Mechanical Surface Detection)
- Electronics: DAE4 Sn874; Calibrated: 8/21/2017
- Phantom: ELI 4.0; Type: QD OVA 001 BB; Serial: 1057
- DASY52 52.10.0(1446); SEMCAD X 14.6.10(7417)

Configuration Body for IC-F1100DT/Body Back, P=5W, d=0mm/Zoom Scan (7x7x7) (8x8x7)/Cube 0: Measurement grid: dx=5mm, dy=5mm, dz=5mm
Reference Value = 16.09 V/m; Power Drift = -0.34 dB
Peak SAR (extrapolated) = 0.369 W/kg
SAR(1 g) = 0.244 W/kg; SAR(10 g) = 0.176 W/kg (SAR corrected for target medium)
Maximum value of SAR (measured) = 0.276 W/kg

Configuration Body for IC-F1100DT/Body Back, P=5W, d=0mm/Area Scan (61x111x1):
Interpolated grid: dx=1.500 mm, dy=1.500 mm
Maximum value of SAR (interpolated) = 0.277 W/kg

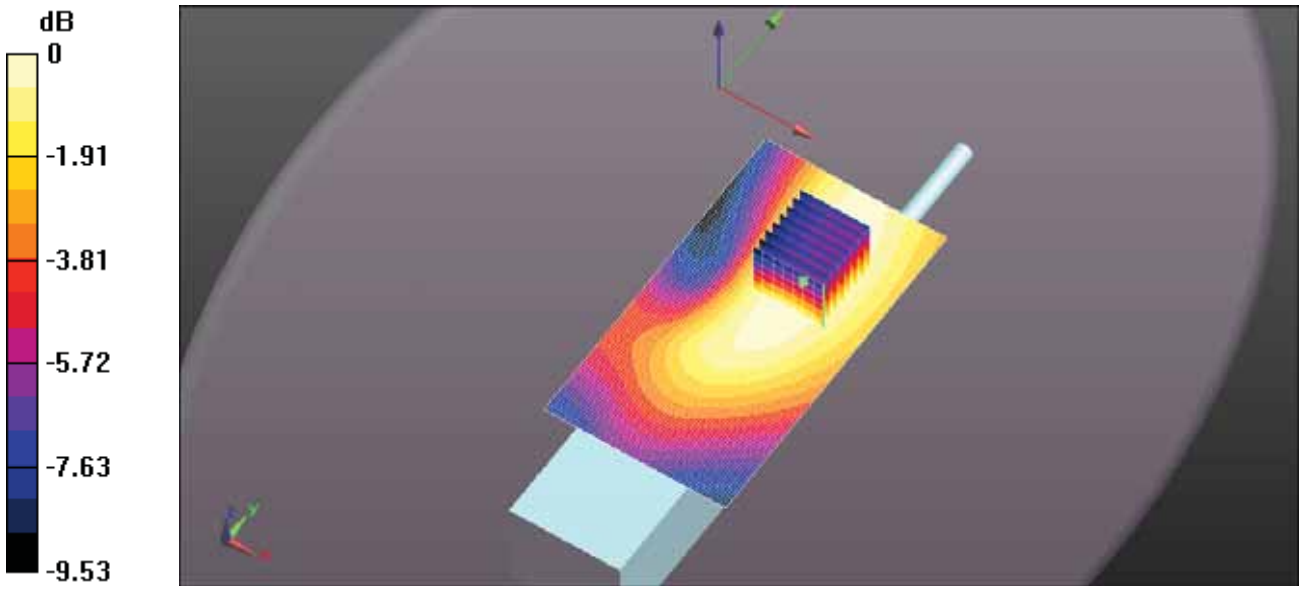

0 dB = 0.276 W/kg = -5.59 dBW/kg

Test Laboratory: Ultratech Group of Labs

FILE NAME: ICOM-489Q BODY FA-SC29V 167MHZ.DA52:0

DUT: IC-F1100DT; Type: VHF Receiver; Serial: 32000201-0

Communication System: UID 10000, CW; Frequency: 167 MHz; Duty Cycle: 1:1
Medium parameters used (interpolated): f = 167 MHz; σ = 0.845 S/m; ε_r = 64.025; ρ = 1000 kg/m^3 ;
Phantom section: Flat Section ; Measurement Standard: DASY5 (IEEE/IEC/ANSI C63.19-2011)

DASY Configuration:

- Probe: ES3DV3 - SN3250; ConvF(7.29, 7.29, 7.29); Calibrated: 3/13/2018;
- Sensor-Surface: 3mm (Mechanical Surface Detection)
- Electronics: DAE4 Sn874; Calibrated: 8/21/2017
- Phantom: ELI 4.0; Type: QD OVA 001 BB; Serial: 1057
- DASY52 52.10.0(1446); SEMCAD X 14.6.10(7417)

Configuration Body for IC-F1100DT/Body Back, P=5W, d=0mm/Zoom Scan (7x7x7) (7x7x7)/Cube 0: Measurement grid: dx=5mm, dy=5mm, dz=5mm
Reference Value = 19.27 V/m; Power Drift = 1.25 dB
Peak SAR (extrapolated) = 0.647 W/kg
SAR(1 g) = 0.364 W/kg; SAR(10 g) = 0.246 W/kg (SAR corrected for target medium)
Maximum value of SAR (measured) = 0.427 W/kg

Configuration Body for IC-F1100DT/Body Back, P=5W, d=0mm/Area Scan (61x111x1):
Interpolated grid: dx=1.500 mm, dy=1.500 mm
Maximum value of SAR (interpolated) = 0.347 W/kg

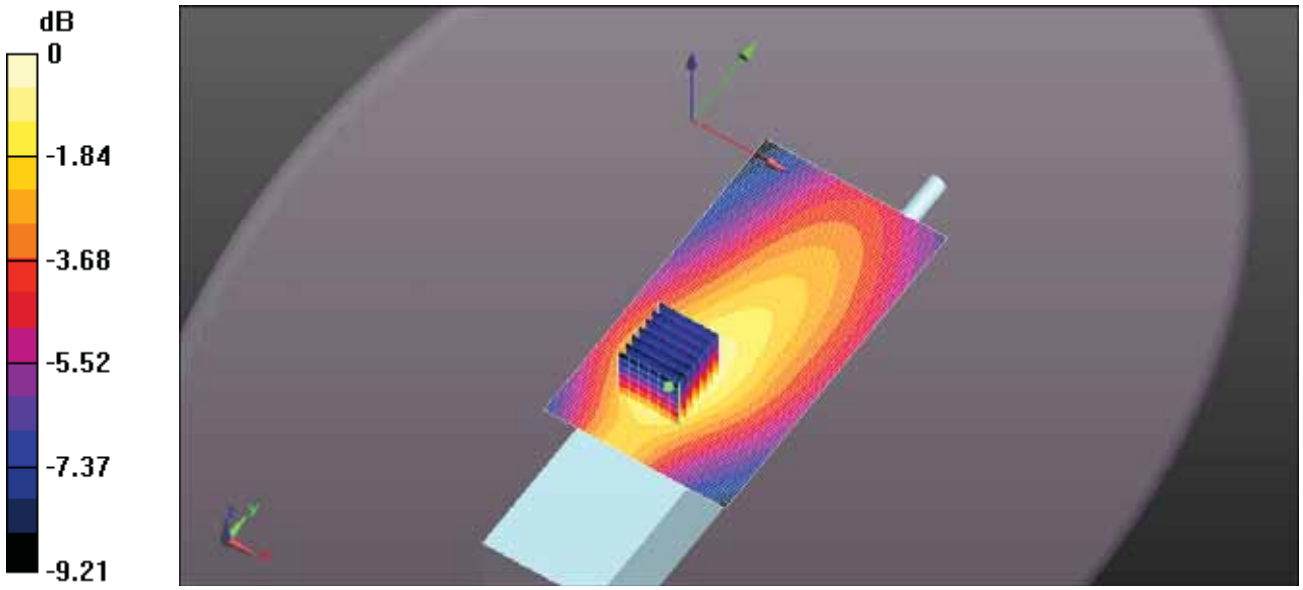

0 dB = 0.427 W/kg = -3.70 dBW/kg

Test Laboratory: Ultratech Group of Labs

FILE NAME: ICOM-489Q BODY FA-SC29V 174MHZ.DA52:0

DUT: IC-F1100DT; Type: VHF Receiver; Serial: 32000201-0

Communication System: UID 10000, CW; Frequency: 174 MHz; Duty Cycle: 1:1
Medium parameters used: f = 174 MHz; σ = 0.85 S/m; ε_r = 63.898; ρ = 1000 kg/m^3 ; Phantom section: Flat Section ; Measurement Standard: DASY5 (IEEE/IEC/ANSI C63.19-2011)

DASY Configuration:

- Probe: ES3DV3 - SN3250; ConvF(7.29, 7.29, 7.29); Calibrated: 3/13/2018;
- Sensor-Surface: 3mm (Mechanical Surface Detection)
- Electronics: DAE4 Sn874; Calibrated: 8/21/2017
- Phantom: ELI 4.0; Type: QD OVA 001 BB; Serial: 1057
- DASY52 52.10.0(1446); SEMCAD X 14.6.10(7417)

Configuration Body for IC-F1100DT/Body Back, P=5W, d=0mm/Zoom Scan (7x7x7) (7x7x7)/Cube 0: Measurement grid: dx=5mm, dy=5mm, dz=5mm
Reference Value = 12.21 V/m; Power Drift = 0.77 dB
Peak SAR (extrapolated) = 0.227 W/kg
SAR(1 g) = 0.129 W/kg; SAR(10 g) = 0.086 W/kg (SAR corrected for target medium)
Maximum value of SAR (measured) = 0.150 W/kg

Configuration Body for IC-F1100DT/Body Back, P=5W, d=0mm/Area Scan (61x111x1):
Interpolated grid: dx=1.500 mm, dy=1.500 mm
Maximum value of SAR (interpolated) = 0.127 W/kg

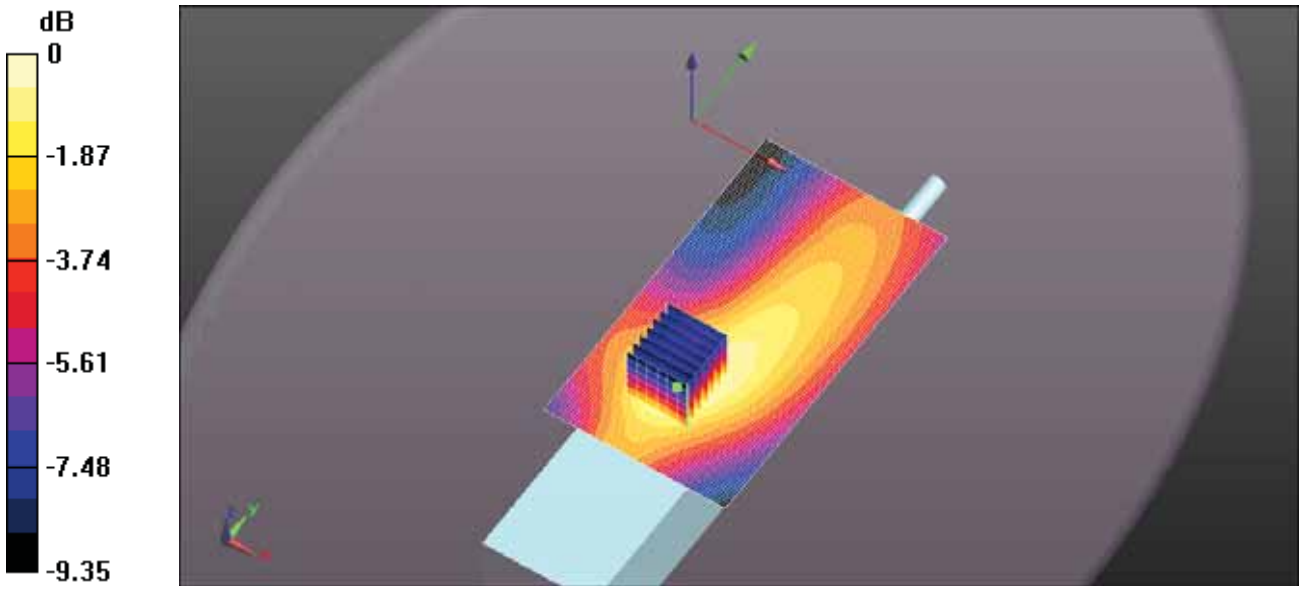

0 dB = 0.150 W/kg = -8.24 dBW/kg

Test Laboratory: Ultratech Group of Labs

FILE NAME: ICOM-489Q BODY FA-SC55V 156MHZ.DA52:0

DUT: IC-F1100DT; Type: VHF Receiver; Serial: 32000201-0

Communication System: UID 10000, CW; Frequency: 156 MHz; Duty Cycle: 1:1
Medium parameters used: f = 156 MHz; σ = 0.841 S/m; ε_r = 64.14; ρ = 1000 kg/m^3 ; Phantom section: Flat Section ; Measurement Standard: DASY5 (IEEE/IEC/ANSI C63.19-2011)

DASY Configuration:

- Probe: ES3DV3 - SN3250; ConvF(7.29, 7.29, 7.29); Calibrated: 3/13/2018;
- Sensor-Surface: 3mm (Mechanical Surface Detection)
- Electronics: DAE4 Sn874; Calibrated: 8/21/2017
- Phantom: ELI 4.0; Type: QD OVA 001 BB; Serial: 1057
- DASY52 52.10.0(1446); SEMCAD X 14.6.10(7417)

Configuration Body for IC-F1100DT/Body Back, P=5W, d=0mm/Zoom Scan (7x7x7) (7x7x7)/Cube 0: Measurement grid: dx=5mm, dy=5mm, dz=5mm
Reference Value = 18.31 V/m; Power Drift = -0.27 dB
Peak SAR (extrapolated) = 0.447 W/kg
SAR(1 g) = 0.302 W/kg; SAR(10 g) = 0.219 W/kg (SAR corrected for target medium)
Maximum value of SAR (measured) = 0.340 W/kg

Configuration Body for IC-F1100DT/Body Back, P=5W, d=0mm/Area Scan (61x111x1):
Interpolated grid: dx=1.500 mm, dy=1.500 mm
Maximum value of SAR (interpolated) = 0.343 W/kg

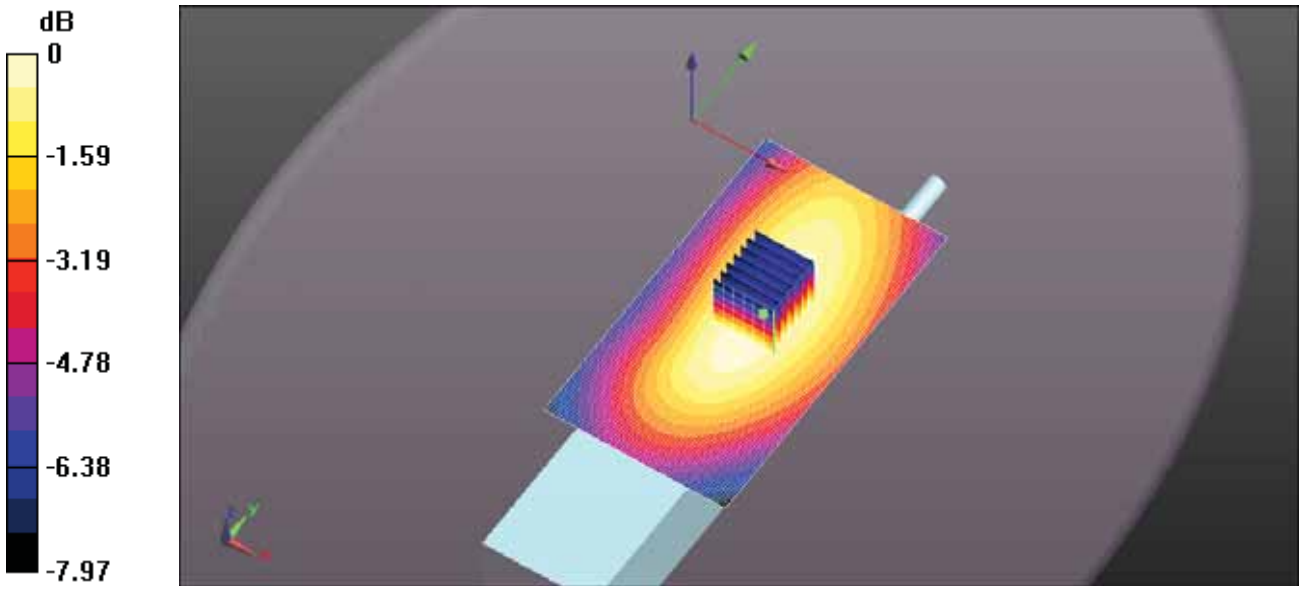

0 dB = 0.340 W/kg = -4.68 dBW/kg

Test Laboratory: Ultratech Group of Labs

FILE NAME: ICOM-489Q BODY FA-SC55V 162MHZ.DA52:0

DUT: IC-F1100DT; Type: VHF Receiver; Serial: 32000201-0

Communication System: UID 10000, CW; Frequency: 162 MHz; Duty Cycle: 1:1
Medium parameters used: f = 162 MHz; σ = 0.843 S/m; ε_r = 64.096; ρ = 1000 kg/m^3 ; Phantom section: Flat Section ; Measurement Standard: DASY5 (IEEE/IEC/ANSI C63.19-2011)

DASY Configuration:

- Probe: ES3DV3 - SN3250; ConvF(7.29, 7.29, 7.29); Calibrated: 3/13/2018;
- Sensor-Surface: 3mm (Mechanical Surface Detection)
- Electronics: DAE4 Sn874; Calibrated: 8/21/2017
- Phantom: ELI 4.0; Type: QD OVA 001 BB; Serial: 1057
- DASY52 52.10.0(1446); SEMCAD X 14.6.10(7417)

Configuration Body for IC-F1100DT/Body Back, P=5W, d=0mm/Zoom Scan (7x7x7) (7x7x7)/Cube 0: Measurement grid: dx=5mm, dy=5mm, dz=5mm
Reference Value = 27.23 V/m; Power Drift = -0.15 dB
Peak SAR (extrapolated) = 0.915 W/kg
SAR(1 g) = 0.543 W/kg; SAR(10 g) = 0.384 W/kg (SAR corrected for target medium)
Maximum value of SAR (measured) = 0.621 W/kg

Configuration Body for IC-F1100DT/Body Back, P=5W, d=0mm/Area Scan (61x111x1):
Interpolated grid: dx=1.500 mm, dy=1.500 mm
Maximum value of SAR (interpolated) = 0.590 W/kg

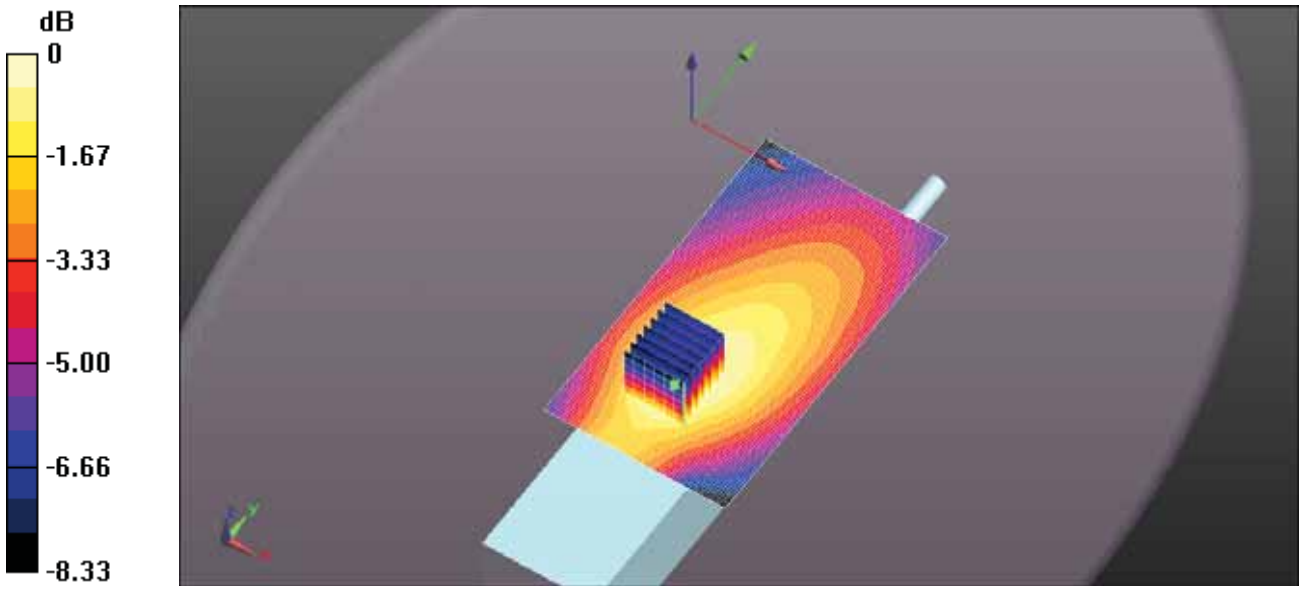

0 dB = 0.621 W/kg = -2.07 dBW/kg

Test Laboratory: Ultratech Group of Labs

FILE NAME: ICOM-489Q BODY FA-SC55V 168MHZ.DA52:0

DUT: IC-F1100DT; Type: VHF Receiver; Serial: 32000201-0

Communication System: UID 10000, CW; Frequency: 168 MHz; Duty Cycle: 1:1
Medium parameters used: f = 168 MHz; σ = 0.845 S/m; ε_r = 64.002; ρ = 1000 kg/m^3 ; Phantom section: Flat Section ; Measurement Standard: DASY5 (IEEE/IEC/ANSI C63.19-2011)

DASY Configuration:

- Probe: ES3DV3 - SN3250; ConvF(7.29, 7.29, 7.29); Calibrated: 3/13/2018;
- Sensor-Surface: 3mm (Mechanical Surface Detection)
- Electronics: DAE4 Sn874; Calibrated: 8/21/2017
- Phantom: ELI 4.0; Type: QD OVA 001 BB; Serial: 1057
- DASY52 52.10.0(1446); SEMCAD X 14.6.10(7417)

Configuration Body for IC-F1100DT/Body Back, P=5W, d=0mm/Zoom Scan (7x7x7) (9x14x7)/Cube 0: Measurement grid: dx=5mm, dy=5mm, dz=5mm
Reference Value = 20.48 V/m; Power Drift = 0.65 dB
Peak SAR (extrapolated) = 0.514 W/kg
SAR(1 g) = 0.327 W/kg; SAR(10 g) = 0.243 W/kg (SAR corrected for target medium)
Maximum value of SAR (measured) = 0.368 W/kg

Configuration Body for IC-F1100DT/Body Back, P=5W, d=0mm/Area Scan (61x111x1):
Interpolated grid: dx=1.500 mm, dy=1.500 mm
Maximum value of SAR (interpolated) = 0.349 W/kg

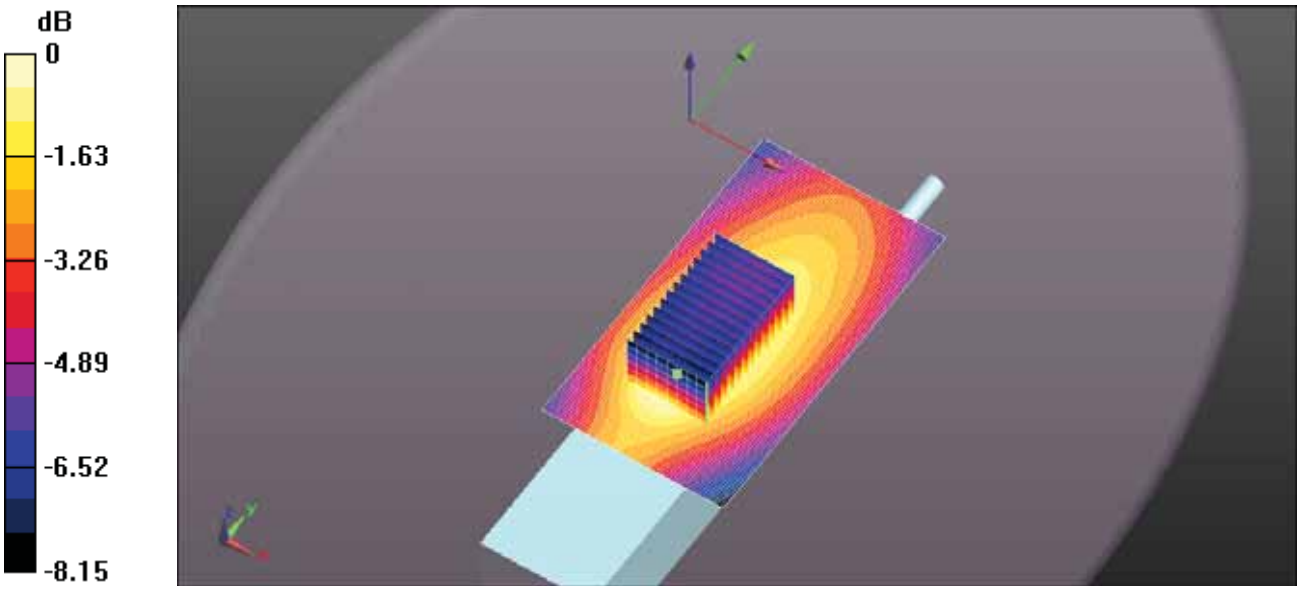

0 dB = 0.368 W/kg = -4.34 dBW/kg

Test Laboratory: Ultratech Group of Labs

FILE NAME: ICOM-489Q BODY FA-SC55V 174MHZ.DA52:0

DUT: IC-F1100DT; Type: VHF Receiver; Serial: 32000201-0

Communication System: UID 10000, CW; Frequency: 174 MHz; Duty Cycle: 1:1
Medium parameters used: f = 174 MHz; σ = 0.85 S/m; ε_r = 63.898; ρ = 1000 kg/m^3 ; Phantom section: Flat Section ; Measurement Standard: DASY5 (IEEE/IEC/ANSI C63.19-2011)

DASY Configuration:

- Probe: ES3DV3 - SN3250; ConvF(7.29, 7.29, 7.29); Calibrated: 3/13/2018;
- Sensor-Surface: 3mm (Mechanical Surface Detection)
- Electronics: DAE4 Sn874; Calibrated: 8/21/2017
- Phantom: ELI 4.0; Type: QD OVA 001 BB; Serial: 1057
- DASY52 52.10.0(1446); SEMCAD X 14.6.10(7417)

Configuration Body for IC-F1100DT/Body Back, P=5W, d=0mm/Zoom Scan (7x7x7) (9x14x7)/Cube 0: Measurement grid: dx=5mm, dy=5mm, dz=5mm
Reference Value = 19.99 V/m; Power Drift = 0.73 dB
Peak SAR (extrapolated) = 0.520 W/kg
SAR(1 g) = 0.338 W/kg; SAR(10 g) = 0.253 W/kg (SAR corrected for target medium)
Maximum value of SAR (measured) = 0.386 W/kg

Configuration Body for IC-F1100DT/Body Back, P=5W, d=0mm/Area Scan (61x111x1):
Interpolated grid: dx=1.500 mm, dy=1.500 mm
Maximum value of SAR (interpolated) = 0.336 W/kg

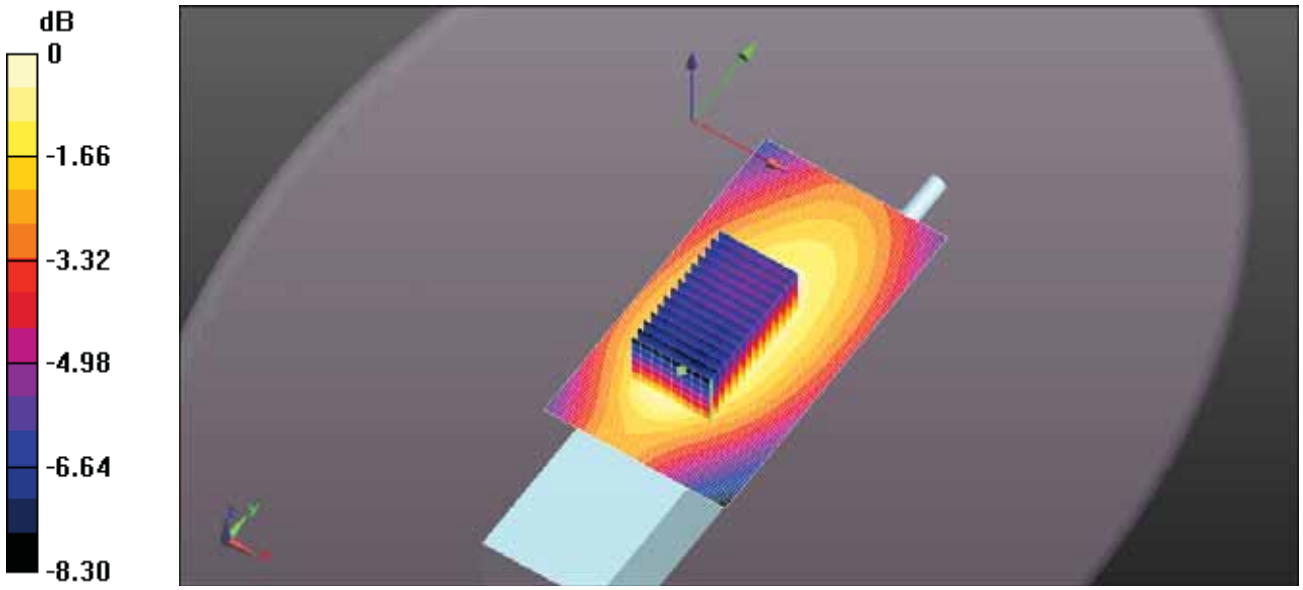

0 dB = 0.386 W/kg = -4.13 dBW/kg

Test Laboratory: Ultratech Group of Labs

FILE NAME: ICOM-489Q BODY FA-SC26VS 136MHZ.DA52:0

DUT: IC-F1100DT; Type: VHF Receiver; Serial: 32000201-0

Communication System: UID 10000, CW; Frequency: 136 MHz; Duty Cycle: 1:1
Medium parameters used: f = 136 MHz; σ = 0.835 S/m; ε_r = 63.621; ρ = 1000 kg/m^3 ; Phantom section: Flat Section ; Measurement Standard: DASY5 (IEEE/IEC/ANSI C63.19-2011)

DASY Configuration:

- Probe: ES3DV3 - SN3250; ConvF(7.29, 7.29, 7.29); Calibrated: 3/13/2018;
- Sensor-Surface: 3mm (Mechanical Surface Detection)
- Electronics: DAE4 Sn874; Calibrated: 8/21/2017
- Phantom: ELI 4.0; Type: QD OVA 001 BB; Serial: 1057
- DASY52 52.10.0(1446); SEMCAD X 14.6.10(7417)

Configuration Body for IC-F1100DT/Body Back, P=5W, d=0mm/Zoom Scan (7x7x7) (7x7x7)/Cube 0: Measurement grid: dx=5mm, dy=5mm, dz=5mm
Reference Value = 23.28 V/m; Power Drift = -1.55 dB
Peak SAR (extrapolated) = 0.891 W/kg
SAR(1 g) = 0.453 W/kg; SAR(10 g) = 0.289 W/kg (SAR corrected for target medium)
Maximum value of SAR (measured) = 0.537 W/kg

Configuration Body for IC-F1100DT/Body Back, P=5W, d=0mm/Area Scan (61x111x1):
Interpolated grid: dx=1.500 mm, dy=1.500 mm
Maximum value of SAR (interpolated) = 0.551 W/kg

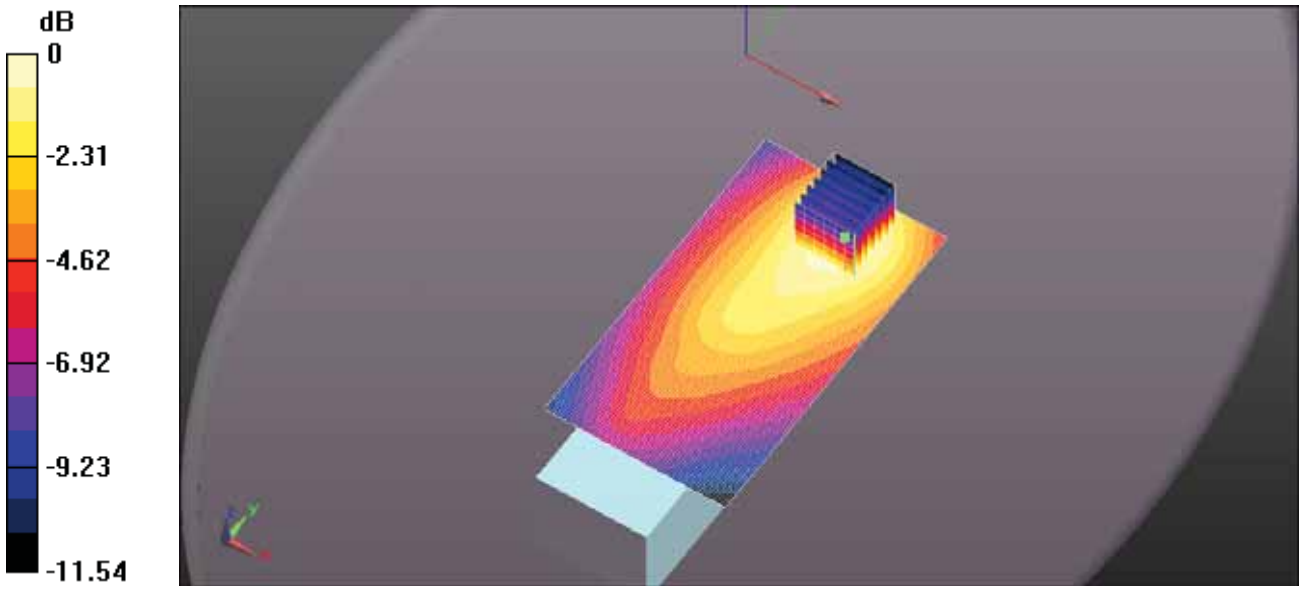

0 dB = 0.537 W/kg = -2.70 dBW/kg

Test Laboratory: Ultratech Group of Labs
File Name: ICOM-489Q Body FA-SC26VS 140MHz.da52:0

DUT: IC-F1100DT; Type: VHF Receiver; Serial: 32000201-0

Communication System: UID 10000, CW; Frequency: 140 MHz; Duty Cycle: 1:1
Medium parameters used: f = 140 MHz; σ = 0.834 S/m; ε_r = 63.726; ρ = 1000 kg/m^3 ; Phantom section: Flat Section ; Measurement Standard: DASY5 (IEEE/IEC/ANSI C63.19-2011)

DASY Configuration:

- Probe: ES3DV3 - SN3250; ConvF(7.29, 7.29, 7.29); Calibrated: 3/13/2018;
- Sensor-Surface: 3mm (Mechanical Surface Detection)
- Electronics: DAE4 Sn874; Calibrated: 8/21/2017
- Phantom: ELI 4.0; Type: QD OVA 001 BB; Serial: 1057
- DASY52 52.10.0(1446); SEMCAD X 14.6.10(7417)

Configuration Body for IC-F1100DT/Body Back, P=5W, d=0mm/Zoom Scan (7x7x7) (7x8x7)/Cube 0:

Measurement grid: dx=5mm, dy=5mm, dz=5mm
Reference Value = 19.60 V/m; Power Drift = -0.44 dB
Peak SAR (extrapolated) = 0.666 W/kg
SAR(1 g) = 0.351 W/kg; SAR(10 g) = 0.230 W/kg (SAR corrected for target medium)
Maximum value of SAR (measured) = 0.408 W/kg

Configuration Body for IC-F1100DT/Body Back, P=5W, d=0mm/Area Scan (61x111x1):

Interpolated grid: dx=1.500 mm, dy=1.500 mm
Maximum value of SAR (interpolated) = 0.411 W/kg

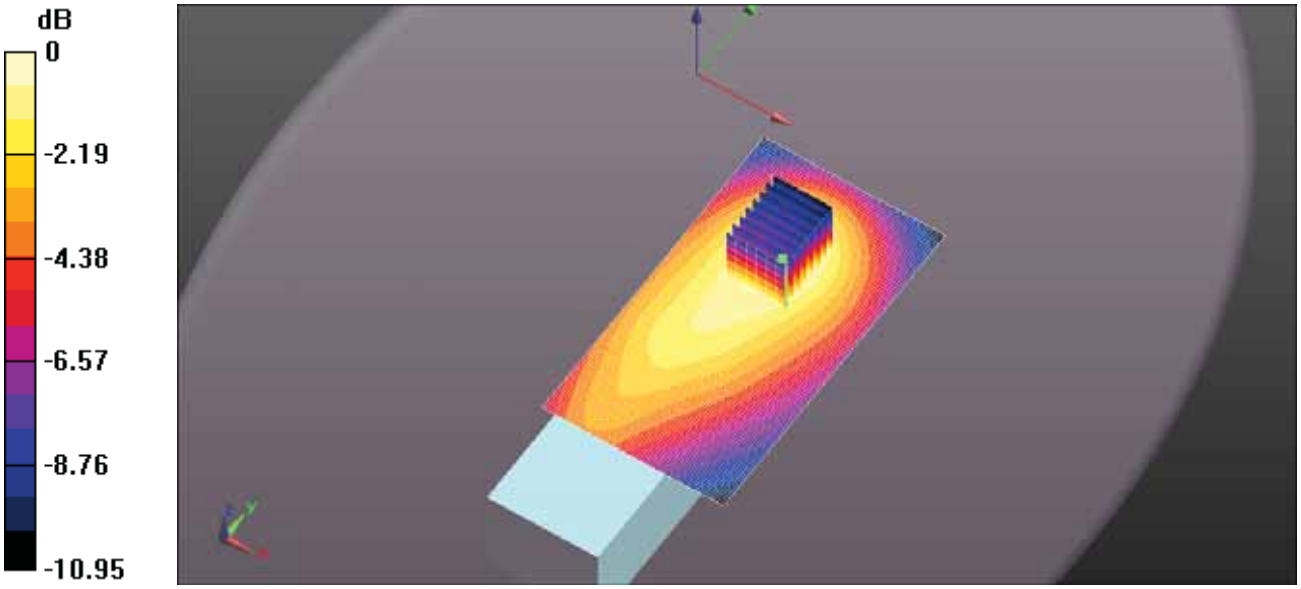

0 dB = 0.408 W/kg = -3.89 dBW/kg

Test Laboratory: Ultratech Group of Labs
File Name: ICOM-489Q Body FA-SC26VS 155MHz.da52:0

DUT: IC-F1100DT; Type: VHF Receiver; Serial: 32000201-0

Communication System: UID 10000, CW; Frequency: 155 MHz; Duty Cycle: 1:1
Medium parameters used (interpolated): f = 155 MHz; σ = 0.841 S/m; ε_r = 64.042; ρ = 1000 kg/m^3 ;
Phantom section: Flat Section ; Measurement Standard: DASY5 (IEEE/IEC/ANSI C63.19-2011)

DASY Configuration:

- Probe: ES3DV3 - SN3250; ConvF(7.29, 7.29, 7.29); Calibrated: 3/13/2018;
- Sensor-Surface: 3mm (Mechanical Surface Detection)
- Electronics: DAE4 Sn874; Calibrated: 8/21/2017
- Phantom: ELI 4.0; Type: QD OVA 001 BB; Serial: 1057
- DASY52 52.10.0(1446); SEMCAD X 14.6.10(7417)

Configuration Body for IC-F1100DT/Body Back, P=5W, d=0mm/Zoom Scan (7x7x7)

(7x7x7)/Cube 0: Measurement grid: dx=5mm, dy=5mm, dz=5mm
Reference Value = 4.596 V/m; Power Drift = 0.06 dB
Peak SAR (extrapolated) = 0.0730 W/kg
SAR(1 g) = 0.036 W/kg; SAR(10 g) = 0.022 W/kg (SAR corrected for target medium)
Maximum value of SAR (measured) = 0.0424 W/kg

Configuration Body for IC-F1100DT/Body Back, P=5W, d=0mm/Area Scan (61x111x1):

Interpolated grid: dx=1.500 mm, dy=1.500 mm
Maximum value of SAR (interpolated) = 0.0440 W/kg

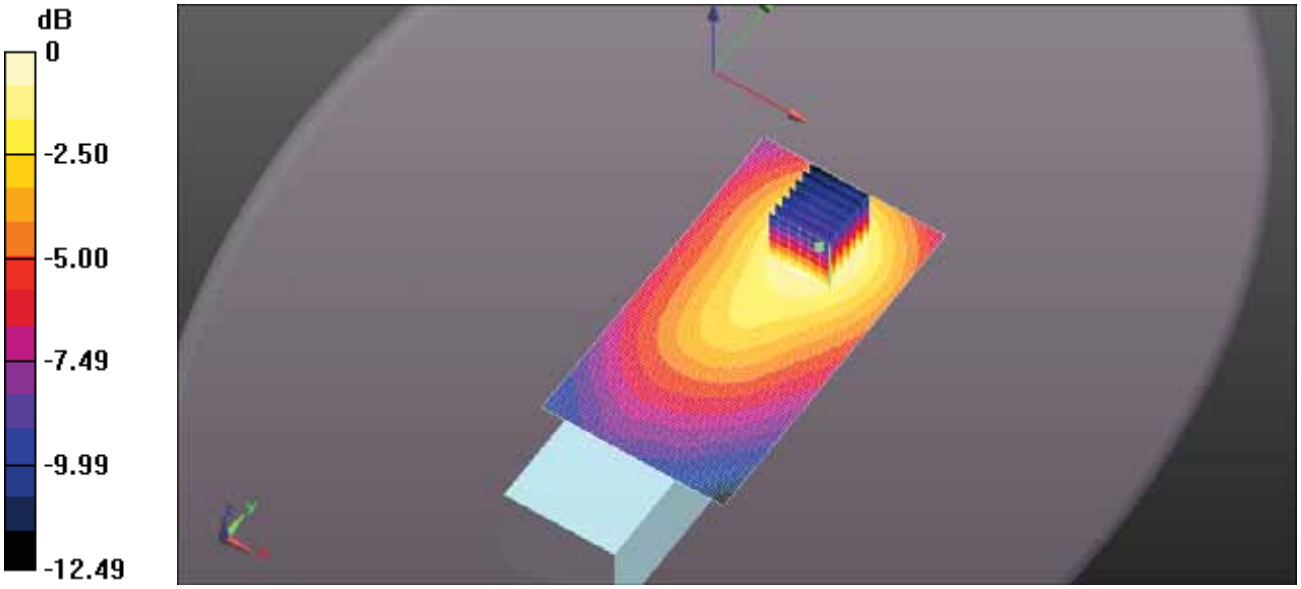

0 dB = 0.0424 W/kg = -13.72 dBW/kg

Test Laboratory: Ultratech Group of Labs

FILE NAME: ICOM-489Q BODY FA-SC27VS 146MHZ.DA52:0

DUT: IC-F1100DT; Type: VHF Receiver; Serial: 32000201-0

Communication System: UID 10000, CW; Frequency: 146 MHz; Duty Cycle: 1:1
Medium parameters used: f = 146 MHz; σ = 0.835 S/m; ε_r = 63.842; ρ = 1000 kg/m^3 ; Phantom section: Flat Section ; Measurement Standard: DASY5 (IEEE/IEC/ANSI C63.19-2011)

DASY Configuration:

- Probe: ES3DV3 - SN3250; ConvF(7.29, 7.29, 7.29); Calibrated: 3/13/2018;
- Sensor-Surface: 3mm (Mechanical Surface Detection)
- Electronics: DAE4 Sn874; Calibrated: 8/21/2017
- Phantom: ELI 4.0; Type: QD OVA 001 BB; Serial: 1057
- DASY52 52.10.0(1446); SEMCAD X 14.6.10(7417)

Configuration Body for IC-F1100DT/Body Back, P=5W, d=0mm/Zoom Scan (7x7x7) (7x8x7)/Cube 0: Measurement grid: dx=5mm, dy=5mm, dz=5mm
Reference Value = 19.41 V/m; Power Drift = -0.36 dB
Peak SAR (extrapolated) = 0.771 W/kg
SAR(1 g) = 0.395 W/kg; SAR(10 g) = 0.253 W/kg (SAR corrected for target medium)
Maximum value of SAR (measured) = 0.466 W/kg

Configuration Body for IC-F1100DT/Body Back, P=5W, d=0mm/Area Scan (61x111x1):
Interpolated grid: dx=1.500 mm, dy=1.500 mm
Maximum value of SAR (interpolated) = 0.479 W/kg

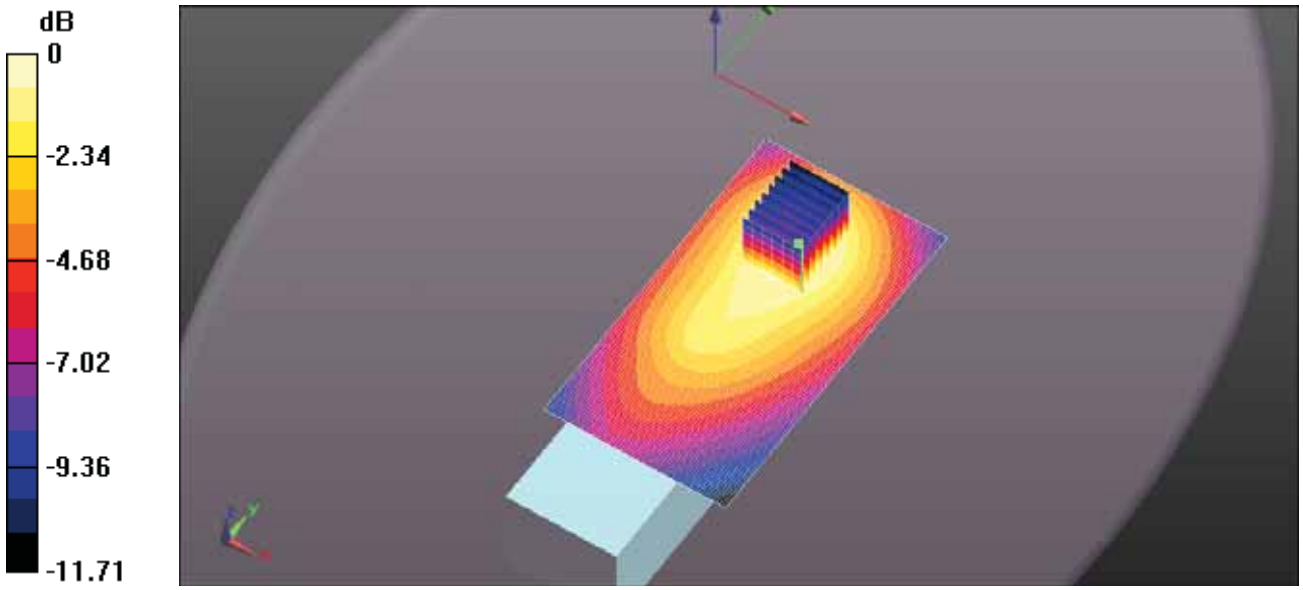

0 dB = 0.466 W/kg = -3.32 dBW/kg

Test Laboratory: Ultratech Group of Labs

FILE NAME: ICOM-489Q BODY FA-SC27VS 150MHZ.DA52:0

DUT: IC-F1100DT; Type: VHF Receiver; Serial: 32000201-0

Communication System: UID 10000, CW; Frequency: 150 MHz; Duty Cycle: 1:1
Medium parameters used: f = 150 MHz; σ = 0.837 S/m; ε_r = 63.795; ρ = 1000 kg/m^3 ; Phantom section: Flat Section ; Measurement Standard: DASY5 (IEEE/IEC/ANSI C63.19-2011)

DASY Configuration:

- Probe: ES3DV3 - SN3250; ConvF(7.29, 7.29, 7.29); Calibrated: 3/13/2018;
- Sensor-Surface: 3mm (Mechanical Surface Detection)
- Electronics: DAE4 Sn874; Calibrated: 8/21/2017
- Phantom: ELI 4.0; Type: QD OVA 001 BB; Serial: 1057
- DASY52 52.10.0(1446); SEMCAD X 14.6.10(7417)

Configuration Body for IC-F1100DT/Body Back, P=5W, d=0mm/Zoom Scan (7x7x7) (7x7x7)/Cube 0: Measurement grid: dx=5mm, dy=5mm, dz=5mm
Reference Value = 14.93 V/m; Power Drift = -0.24 dB
Peak SAR (extrapolated) = 0.487 W/kg
SAR(1 g) = 0.243 W/kg; SAR(10 g) = 0.155 W/kg (SAR corrected for target medium)
Maximum value of SAR (measured) = 0.297 W/kg

Configuration Body for IC-F1100DT/Body Back, P=5W, d=0mm/Area Scan (61x111x1):
Interpolated grid: dx=1.500 mm, dy=1.500 mm
Maximum value of SAR (interpolated) = 0.294 W/kg

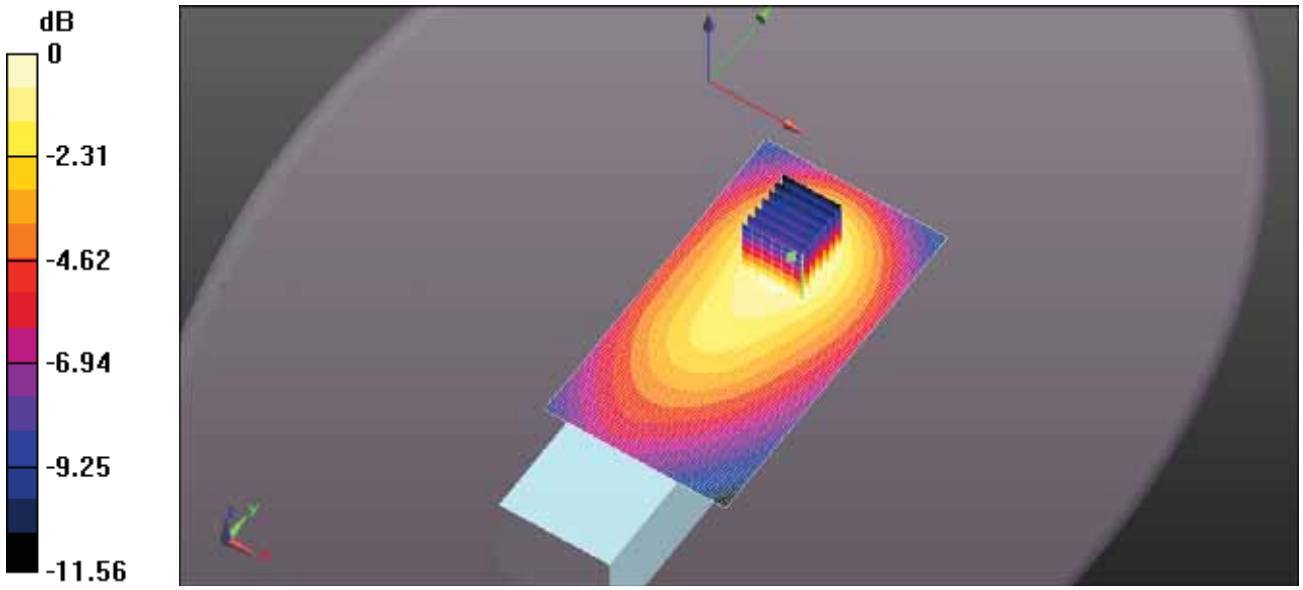

0 dB = 0.297 W/kg = -5.28 dBW/kg

Test Laboratory: Ultratech Group of Labs

FILE NAME: ICOM-489Q BODY FA-SC56VS 150MHZ.DA52:0

DUT: IC-F1100DT; Type: VHF Receiver; Serial: 32000201-0

Communication System: UID 10000, CW; Frequency: 150 MHz; Duty Cycle: 1:1
Medium parameters used: f = 150 MHz; σ = 0.837 S/m; ε_r = 63.795; ρ = 1000 kg/m^3 ; Phantom section: Flat Section ; Measurement Standard: DASY5 (IEEE/IEC/ANSI C63.19-2011)

DASY Configuration:

- Probe: ES3DV3 - SN3250; ConvF(7.29, 7.29, 7.29); Calibrated: 3/13/2018;
- Sensor-Surface: 3mm (Mechanical Surface Detection)
- Electronics: DAE4 Sn874; Calibrated: 8/21/2017
- Phantom: ELI 4.0; Type: QD OVA 001 BB; Serial: 1057
- DASY52 52.10.0(1446); SEMCAD X 14.6.10(7417)

Configuration Body for IC-F1100DT/Body Back, P=5W, d=0mm/Zoom Scan (7x7x7) (7x7x7)/Cube 0: Measurement grid: dx=5mm, dy=5mm, dz=5mm
Reference Value = 10.50 V/m; Power Drift = -0.28 dB
Peak SAR (extrapolated) = 0.346 W/kg
SAR(1 g) = 0.164 W/kg; SAR(10 g) = 0.100 W/kg (SAR corrected for target medium)
Maximum value of SAR (measured) = 0.200 W/kg

Configuration Body for IC-F1100DT/Body Back, P=5W, d=0mm/Area Scan (61x111x1):
Interpolated grid: dx=1.500 mm, dy=1.500 mm
Maximum value of SAR (interpolated) = 0.207 W/kg

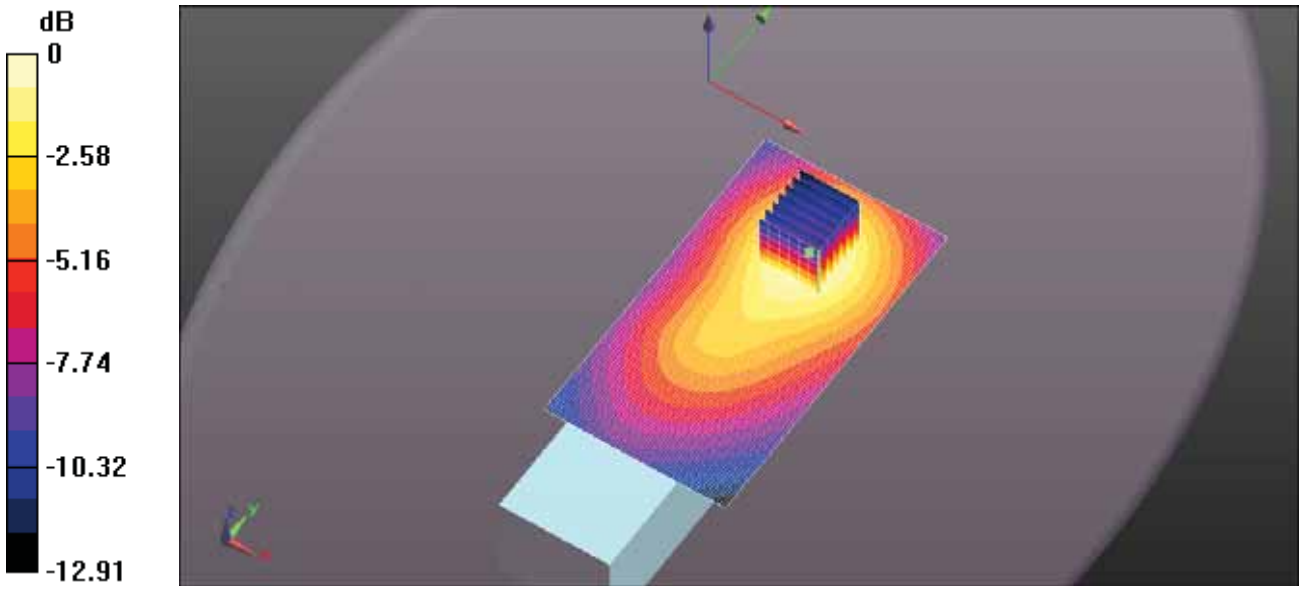

0 dB = 0.200 W/kg = -6.99 dBW/kg

Test Laboratory: Ultratech Group of Labs

FILE NAME: ICOM-489Q BODY FA-SC56VS 156MHZ.DA52:0

DUT: IC-F1100DT; Type: VHF Receiver; Serial: 32000201-0

Communication System: UID 10000, CW; Frequency: 156 MHz; Duty Cycle: 1:1
Medium parameters used: f = 156 MHz; σ = 0.841 S/m; ε_r = 64.14; ρ = 1000 kg/m^3 ; Phantom section: Flat Section ; Measurement Standard: DASY5 (IEEE/IEC/ANSI C63.19-2011)

DASY Configuration:

- Probe: ES3DV3 - SN3250; ConvF(7.29, 7.29, 7.29); Calibrated: 3/13/2018;
- Sensor-Surface: 3mm (Mechanical Surface Detection)
- Electronics: DAE4 Sn874; Calibrated: 8/21/2017
- Phantom: ELI 4.0; Type: QD OVA 001 BB; Serial: 1057
- DASY52 52.10.0(1446); SEMCAD X 14.6.10(7417)

Configuration Body for IC-F1100DT/Body Back, P=5W, d=0mm/Zoom Scan (7x7x7) (7x7x7)/Cube 0: Measurement grid: dx=5mm, dy=5mm, dz=5mm
Reference Value = 6.278 V/m; Power Drift = 0.60 dB
Peak SAR (extrapolated) = 0.156 W/kg
SAR(1 g) = 0.075 W/kg; SAR(10 g) = 0.046 W/kg (SAR corrected for target medium)
Maximum value of SAR (measured) = 0.0899 W/kg

Configuration Body for IC-F1100DT/Body Back, P=5W, d=0mm/Area Scan (61x111x1):
Interpolated grid: dx=1.500 mm, dy=1.500 mm
Maximum value of SAR (interpolated) = 0.0892 W/kg

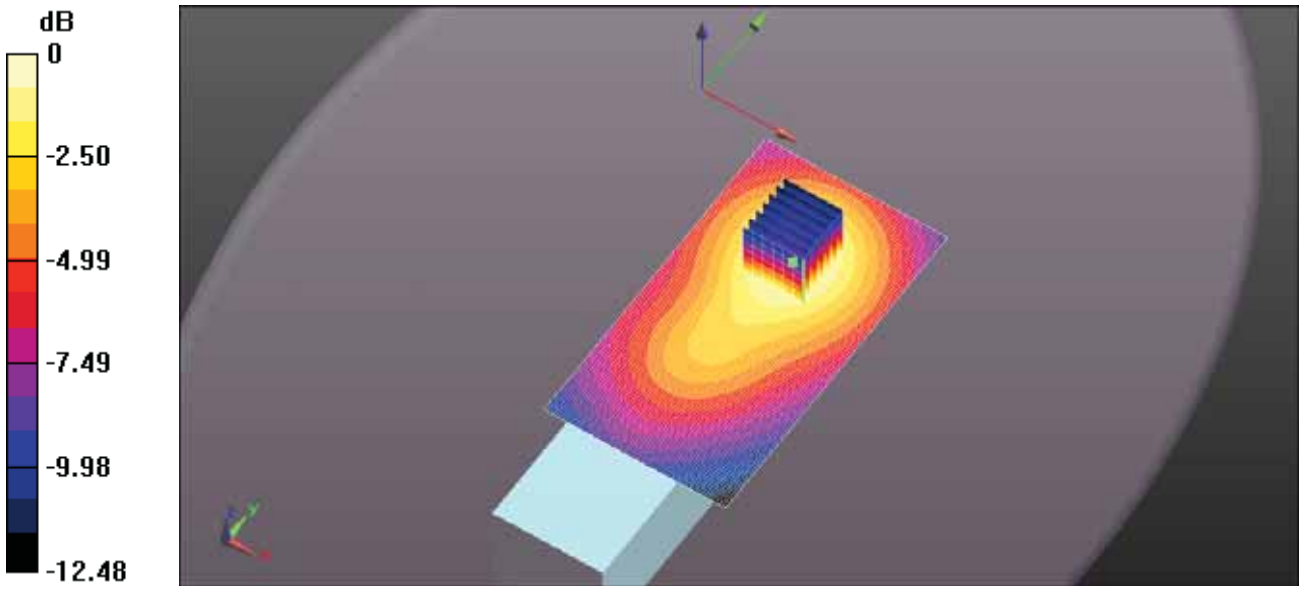

0 dB = 0.0899 W/kg = -10.46 dBW/kg

Test Laboratory: Ultratech Group of Labs

FILE NAME: ICOM-489Q BODY FA-SC56VS 162MHZ.DA52:0

DUT: IC-F1100DT; Type: VHF Receiver; Serial: 32000201-0

Communication System: UID 10000, CW; Frequency: 162 MHz; Duty Cycle: 1:1
Medium parameters used: f = 162 MHz; σ = 0.843 S/m; ε_r = 64.096; ρ = 1000 kg/m^3 ; Phantom section: Flat Section ; Measurement Standard: DASY5 (IEEE/IEC/ANSI C63.19-2011)

DASY Configuration:

- Probe: ES3DV3 - SN3250; ConvF(7.29, 7.29, 7.29); Calibrated: 3/13/2018;
- Sensor-Surface: 3mm (Mechanical Surface Detection)
- Electronics: DAE4 Sn874; Calibrated: 8/21/2017
- Phantom: ELI 4.0; Type: QD OVA 001 BB; Serial: 1057
- DASY52 52.10.0(1446); SEMCAD X 14.6.10(7417)

Configuration Body for IC-F1100DT/Body Back, P=5W, d=0mm/Zoom Scan (7x7x7) (7x7x7)/Cube 0: Measurement grid: dx=5mm, dy=5mm, dz=5mm
Reference Value = 5.602 V/m; Power Drift = -0.56 dB
Peak SAR (extrapolated) = 0.102 W/kg
SAR(1 g) = 0.049 W/kg; SAR(10 g) = 0.030 W/kg (SAR corrected for target medium)
Maximum value of SAR (measured) = 0.0591 W/kg

Configuration Body for IC-F1100DT/Body Back, P=5W, d=0mm/Area Scan (61x111x1):
Interpolated grid: dx=1.500 mm, dy=1.500 mm
Maximum value of SAR (interpolated) = 0.0611 W/kg

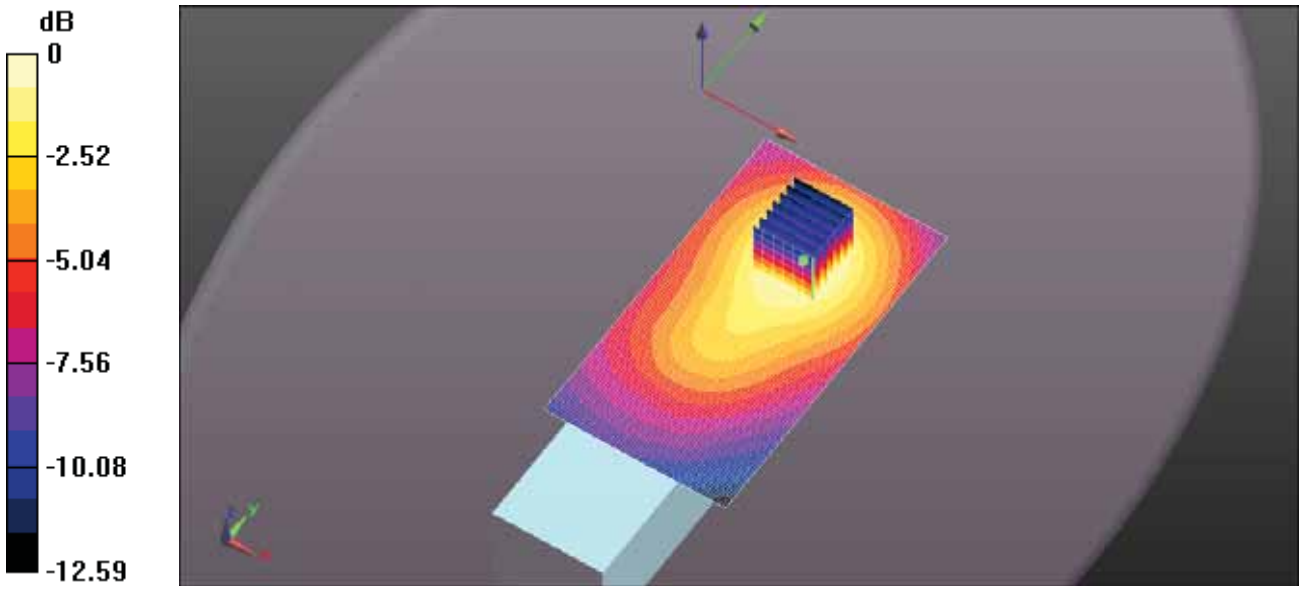

0 dB = 0.0591 W/kg = -12.29 dBW/kg

Test Laboratory: Ultratech Group of Labs

FILE NAME: ICOM-489Q BODY FA-SC57VS 160MHZ.DA52:0

DUT: IC-F1100DT; Type: VHF Receiver; Serial: 32000201-0

Communication System: UID 10000, CW; Frequency: 160 MHz; Duty Cycle: 1:1
Medium parameters used: f = 160 MHz; σ = 0.841 S/m; ε_r = 64.05; ρ = 1000 kg/m^3 ; Phantom section: Flat Section ; Measurement Standard: DASY5 (IEEE/IEC/ANSI C63.19-2011)

DASY Configuration:

- Probe: ES3DV3 - SN3250; ConvF(7.29, 7.29, 7.29); Calibrated: 3/13/2018;
- Sensor-Surface: 3mm (Mechanical Surface Detection)
- Electronics: DAE4 Sn874; Calibrated: 8/21/2017
- Phantom: ELI 4.0; Type: QD OVA 001 BB; Serial: 1057
- DASY52 52.10.0(1446); SEMCAD X 14.6.10(7417)

Configuration Body for IC-F1100DT/Body Back, P=5W, d=0mm/Zoom Scan (7x7x7) (7x7x7)/Cube 0: Measurement grid: dx=5mm, dy=5mm, dz=5mm
Reference Value = 19.86 V/m; Power Drift = -0.74 dB
Peak SAR (extrapolated) = 0.850 W/kg
SAR(1 g) = 0.433 W/kg; SAR(10 g) = 0.274 W/kg (SAR corrected for target medium)
Maximum value of SAR (measured) = 0.514 W/kg

Configuration Body for IC-F1100DT/Body Back, P=5W, d=0mm/Area Scan (61x111x1):
Interpolated grid: dx=1.500 mm, dy=1.500 mm
Maximum value of SAR (interpolated) = 0.529 W/kg

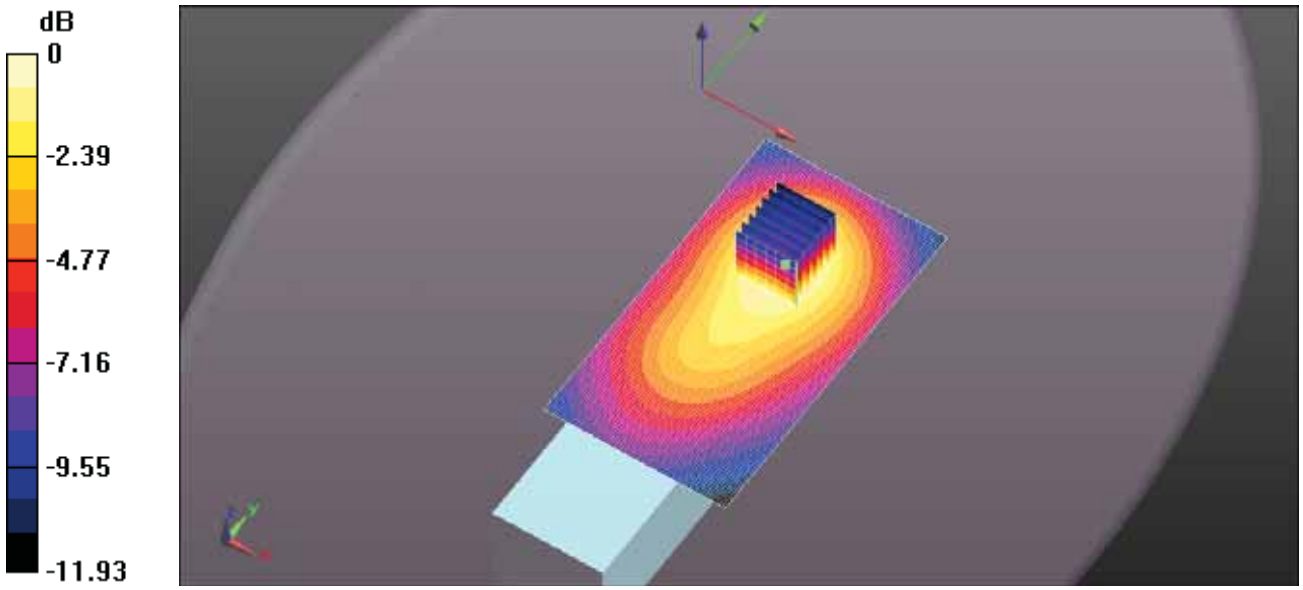

0 dB = 0.514 W/kg = -2.89 dBW/kg

Test Laboratory: Ultratech Group of Labs

FILE NAME: ICOM-489Q BODY FA-SC57VS 167MHZ.DA52:0

DUT: IC-F1100DT; Type: VHF Receiver; Serial: 32000201-0

Communication System: UID 10000, CW; Frequency: 167 MHz; Duty Cycle: 1:1
Medium parameters used (interpolated): f = 167 MHz; σ = 0.845 S/m; ε_r = 64.025; ρ = 1000 kg/m^3 ;
Phantom section: Flat Section ; Measurement Standard: DASY5 (IEEE/IEC/ANSI C63.19-2011)

DASY Configuration:

- Probe: ES3DV3 - SN3250; ConvF(7.29, 7.29, 7.29); Calibrated: 3/13/2018;
- Sensor-Surface: 3mm (Mechanical Surface Detection)
- Electronics: DAE4 Sn874; Calibrated: 8/21/2017
- Phantom: ELI 4.0; Type: QD OVA 001 BB; Serial: 1057
- DASY52 52.10.0(1446); SEMCAD X 14.6.10(7417)

Configuration Body for IC-F1100DT/Body Back, P=5W, d=0mm/Zoom Scan (7x7x7) (7x8x7)/Cube 0: Measurement grid: dx=5mm, dy=5mm, dz=5mm
Reference Value = 15.36 V/m; Power Drift = 0.85 dB
Peak SAR (extrapolated) = 0.427 W/kg
SAR(1 g) = 0.233 W/kg; SAR(10 g) = 0.154 W/kg (SAR corrected for target medium)
Maximum value of SAR (measured) = 0.274 W/kg

Configuration Body for IC-F1100DT/Body Back, P=5W, d=0mm/Area Scan (61x111x1):
Interpolated grid: dx=1.500 mm, dy=1.500 mm
Maximum value of SAR (interpolated) = 0.235 W/kg

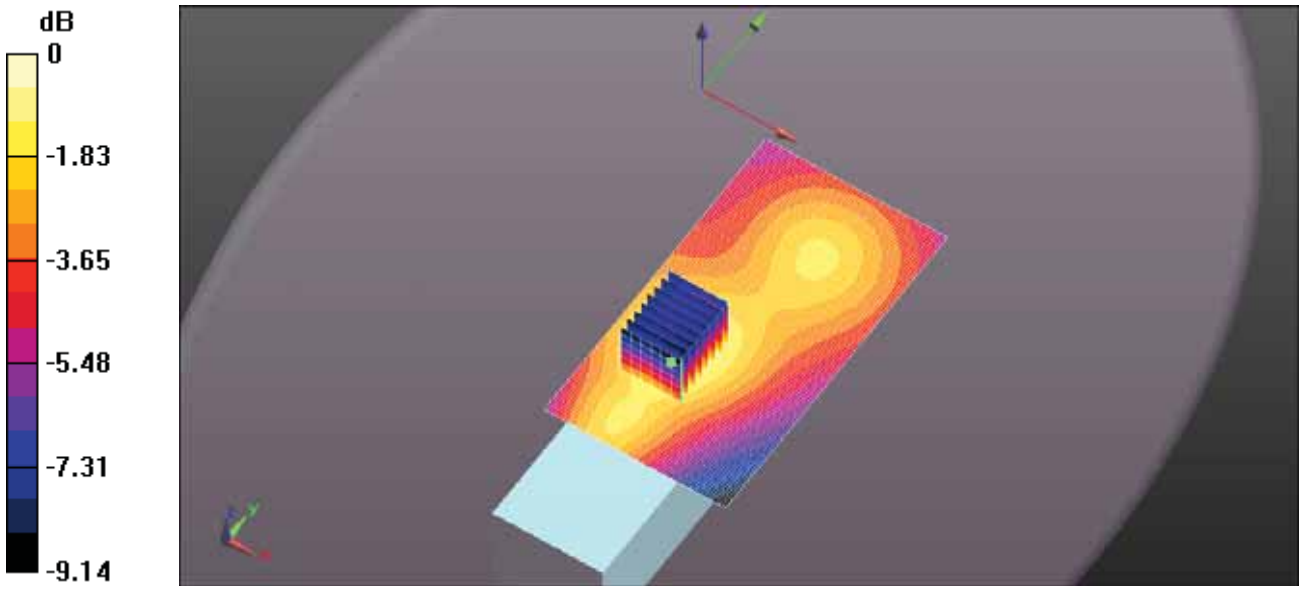

0 dB = 0.274 W/kg = -5.62 dBW/kg

Test Laboratory: Ultratech Group of Labs

FILE NAME: ICOM-489Q BODY FA-SC57VS 174MHZ.DA52:0

DUT: IC-F1100DT; Type: VHF Receiver; Serial: 32000201-0

Communication System: UID 10000, CW; Frequency: 174 MHz; Duty Cycle: 1:1
Medium parameters used: f = 174 MHz; σ = 0.85 S/m; ε_r = 63.898; ρ = 1000 kg/m^3 ; Phantom section: Flat Section ; Measurement Standard: DASY5 (IEEE/IEC/ANSI C63.19-2011)

DASY Configuration:

- Probe: ES3DV3 - SN3250; ConvF(7.29, 7.29, 7.29); Calibrated: 3/13/2018;
- Sensor-Surface: 3mm (Mechanical Surface Detection)
- Electronics: DAE4 Sn874; Calibrated: 8/21/2017
- Phantom: ELI 4.0; Type: QD OVA 001 BB; Serial: 1057
- DASY52 52.10.0(1446); SEMCAD X 14.6.10(7417)

Configuration Body for IC-F1100DT/Body Back, P=5W, d=0mm/Zoom Scan (7x7x7) (7x9x7)/Cube 0: Measurement grid: dx=5mm, dy=5mm, dz=5mm
Reference Value = 15.84 V/m; Power Drift = 0.76 dB
Peak SAR (extrapolated) = 0.375 W/kg
SAR(1 g) = 0.223 W/kg; SAR(10 g) = 0.154 W/kg (SAR corrected for target medium)
Maximum value of SAR (measured) = 0.257 W/kg

Configuration Body for IC-F1100DT/Body Back, P=5W, d=0mm/Area Scan (61x111x1):
Interpolated grid: dx=1.500 mm, dy=1.500 mm
Maximum value of SAR (interpolated) = 0.221 W/kg

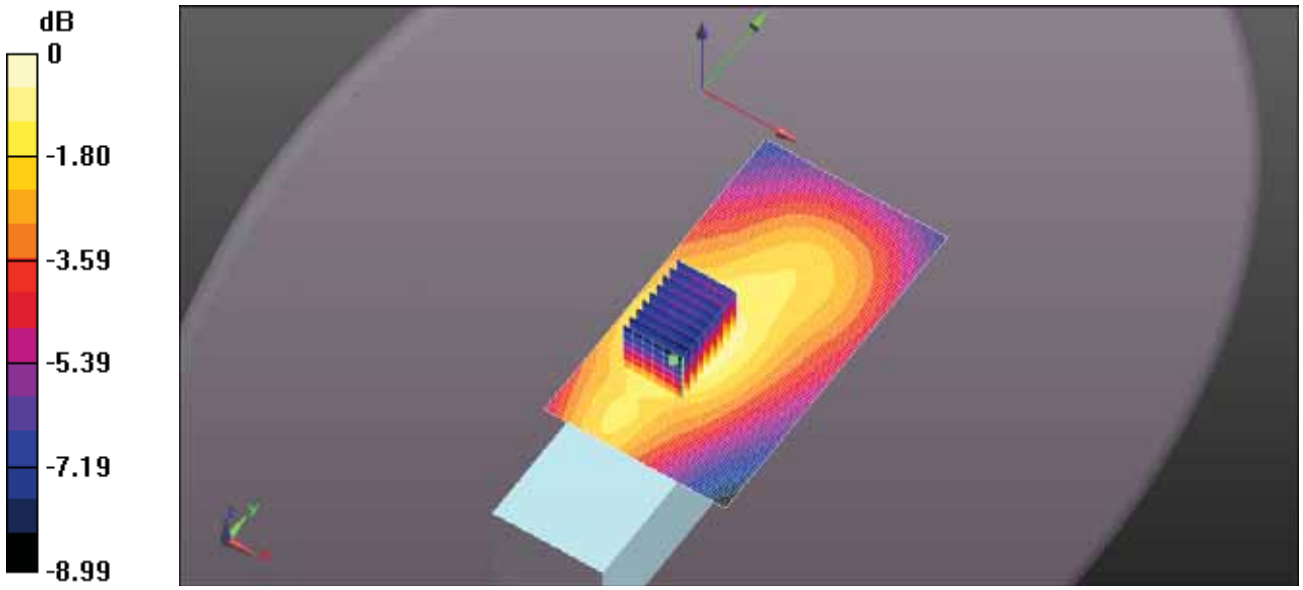

0 dB = 0.257 W/kg = -5.90 dBW/kg

Test Laboratory: Ultratech Group of Labs

FILE NAME: ICOM-489Q BODY FA-SC61VC 174MM 136MHZ.DA52:0

DUT: IC-F1100DT; Type: VHF Receiver; Serial: 32000201-0

Communication System: UID 10000, CW; Frequency: 136 MHz; Duty Cycle: 1:1
Medium parameters used: f = 136 MHz; σ = 0.835 S/m; ε_r = 63.621; ρ = 1000 kg/m^3 ; Phantom section: Flat Section ; Measurement Standard: DASY5 (IEEE/IEC/ANSI C63.19-2011)

DASY Configuration:

- Probe: ES3DV3 - SN3250; ConvF(7.29, 7.29, 7.29); Calibrated: 3/13/2018;
- Sensor-Surface: 3mm (Mechanical Surface Detection)
- Electronics: DAE4 Sn874; Calibrated: 8/21/2017
- Phantom: ELI 4.0; Type: QD OVA 001 BB; Serial: 1057
- DASY52 52.10.0(1446); SEMCAD X 14.6.10(7417)

Configuration Body for IC-F1100DT/Body Back, P=5W, d=0mm/Zoom Scan (7x7x7) (7x7x7)/Cube 0: Measurement grid: dx=5mm, dy=5mm, dz=5mm
Reference Value = 30.83 V/m; Power Drift = 0.01 dB
Peak SAR (extrapolated) = 1.13 W/kg
SAR(1 g) = 0.778 W/kg; SAR(10 g) = 0.582 W/kg (SAR corrected for target medium)
Maximum value of SAR (measured) = 0.868 W/kg

Configuration Body for IC-F1100DT/Body Back, P=5W, d=0mm/Area Scan (61x111x1):
Interpolated grid: dx=1.500 mm, dy=1.500 mm
Maximum value of SAR (interpolated) = 0.861 W/kg

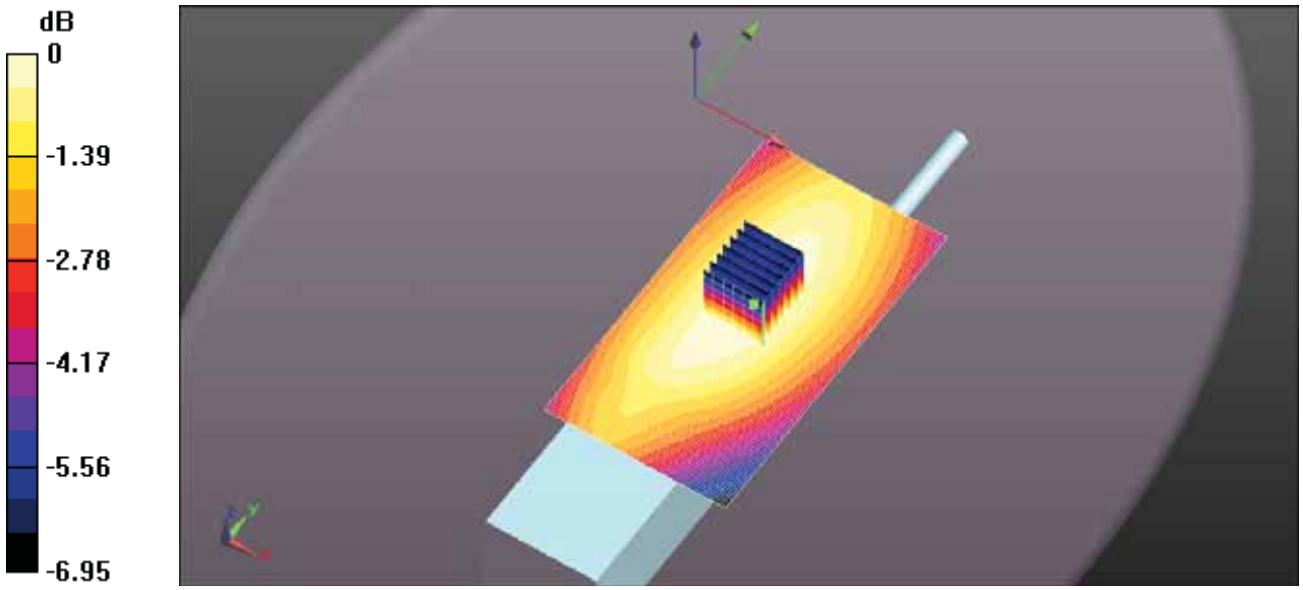

0 dB = 0.868 W/kg = -0.61 dBW/kg

Test Laboratory: Ultratech Group of Labs

FILE NAME: ICOM-489Q BODY FA-SC61VC 174MM 142.3MHZ.DA52:0

DUT: IC-F1100DT; Type: VHF Receiver; Serial: 32000201-0

Communication System: UID 10000, CW; Frequency: 142.3 MHz; Duty Cycle: 1:1
Medium parameters used (interpolated): f = 142.3 MHz; σ = 0.836 S/m; ε_r = 63.771; ρ = 1000 kg/m^3 ;
Phantom section: Flat Section ; Measurement Standard: DASY5 (IEEE/IEC/ANSI C63.19-2011)

DASY Configuration:

- Probe: ES3DV3 - SN3250; ConvF(7.29, 7.29, 7.29); Calibrated: 3/13/2018;
- Sensor-Surface: 3mm (Mechanical Surface Detection)
- Electronics: DAE4 Sn874; Calibrated: 8/21/2017
- Phantom: ELI 4.0; Type: QD OVA 001 BB; Serial: 1057
- DASY52 52.10.0(1446); SEMCAD X 14.6.10(7417)

Configuration Body for IC-F1100DT/Body Back, P=5W, d=0mm/Zoom Scan (7x7x7) (7x7x7)/Cube 0: Measurement grid: dx=5mm, dy=5mm, dz=5mm
Reference Value = 23.46 V/m; Power Drift = -0.20 dB
Peak SAR (extrapolated) = 0.661 W/kg
SAR(1 g) = 0.451 W/kg; SAR(10 g) = 0.335 W/kg (SAR corrected for target medium)
Maximum value of SAR (measured) = 0.508 W/kg

Configuration Body for IC-F1100DT/Body Back, P=5W, d=0mm/Area Scan (61x111x1):
Interpolated grid: dx=1.500 mm, dy=1.500 mm
Maximum value of SAR (interpolated) = 0.493 W/kg

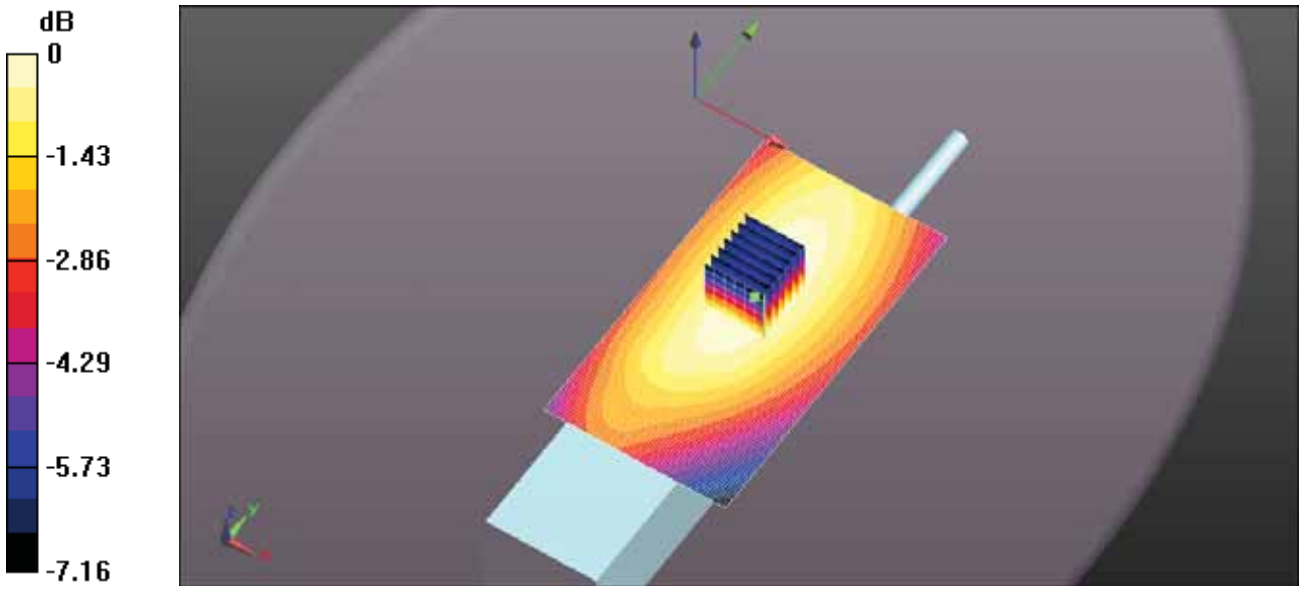

0 dB = 0.508 W/kg = -2.94 dBW/kg

Test Laboratory: Ultratech Group of Labs

FILE NAME: ICOM-489Q BODY FA-SC61VC 174MM 148.7MHZ.DA52:0

DUT: IC-F1100DT; Type: VHF Receiver; Serial: 32000201-0

Communication System: UID 10000, CW; Frequency: 148.7 MHz; Duty Cycle: 1:1
Medium parameters used (interpolated): f = 148.7 MHz; σ = 0.837 S/m; ε_r = 63.661; ρ = 1000 kg/m^3 ;
Phantom section: Flat Section ; Measurement Standard: DASY5 (IEEE/IEC/ANSI C63.19-2011)

DASY Configuration:

- Probe: ES3DV3 - SN3250; ConvF(7.29, 7.29, 7.29); Calibrated: 3/13/2018;
- Sensor-Surface: 3mm (Mechanical Surface Detection)
- Electronics: DAE4 Sn874; Calibrated: 8/21/2017
- Phantom: ELI 4.0; Type: QD OVA 001 BB; Serial: 1057
- DASY52 52.10.0(1446); SEMCAD X 14.6.10(7417)

Configuration Body for IC-F1100DT/Body Back, P=5W, d=0mm/Zoom Scan (7x7x7) (7x7x7)/Cube 0: Measurement grid: dx=5mm, dy=5mm, dz=5mm
Reference Value = 15.20 V/m; Power Drift = -0.11 dB
Peak SAR (extrapolated) = 0.321 W/kg
SAR(1 g) = 0.219 W/kg; SAR(10 g) = 0.162 W/kg (SAR corrected for target medium)
Maximum value of SAR (measured) = 0.246 W/kg

Configuration Body for IC-F1100DT/Body Back, P=5W, d=0mm/Area Scan (61x111x1):
Interpolated grid: dx=1.500 mm, dy=1.500 mm
Maximum value of SAR (interpolated) = 0.247 W/kg

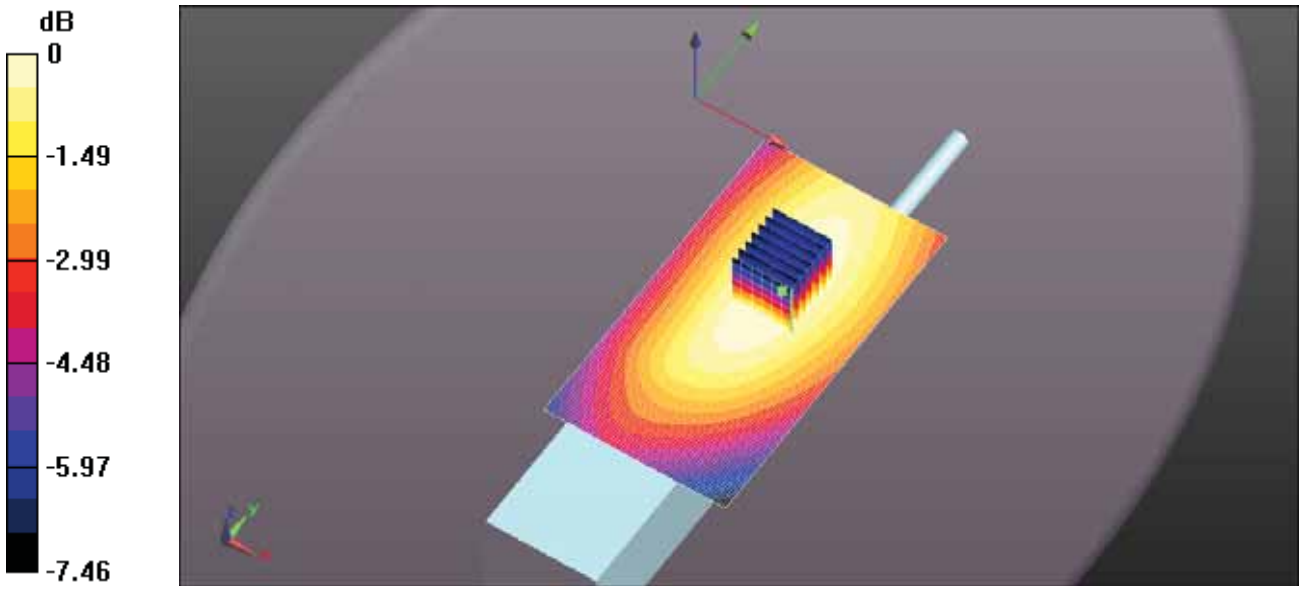

0 dB = 0.246 W/kg = -6.10 dBW/kg

Test Laboratory: Ultratech Group of Labs

FILE NAME: ICOM-489Q BODY FA-SC61VC 174MM 155MHZ.DA52:0

DUT: IC-F1100DT; Type: VHF Receiver; Serial: 32000201-0

Communication System: UID 10000, CW; Frequency: 155 MHz; Duty Cycle: 1:1
Medium parameters used (interpolated): f = 155 MHz; σ = 0.841 S/m; ε_r = 64.042; ρ = 1000 kg/m^3 ;
Phantom section: Flat Section ; Measurement Standard: DASY5 (IEEE/IEC/ANSI C63.19-2011)

DASY Configuration:

- Probe: ES3DV3 - SN3250; ConvF(7.29, 7.29, 7.29); Calibrated: 3/13/2018;
- Sensor-Surface: 3mm (Mechanical Surface Detection)
- Electronics: DAE4 Sn874; Calibrated: 8/21/2017
- Phantom: ELI 4.0; Type: QD OVA 001 BB; Serial: 1057
- DASY52 52.10.0(1446); SEMCAD X 14.6.10(7417)

Configuration Body for IC-F1100DT/Body Back, P=5W, d=0mm/Zoom Scan (7x7x7) (7x8x7)/Cube 0: Measurement grid: dx=5mm, dy=5mm, dz=5mm
Reference Value = 10.31 V/m; Power Drift = -0.10 dB
Peak SAR (extrapolated) = 0.176 W/kg
SAR(1 g) = 0.118 W/kg; SAR(10 g) = 0.087 W/kg (SAR corrected for target medium)Maximum value of SAR (measured) = 0.134 W/kg

Configuration Body for IC-F1100DT/Body Back, P=5W, d=0mm/Area Scan (61x111x1):
Interpolated grid: dx=1.500 mm, dy=1.500 mm
Maximum value of SAR (interpolated) = 0.133 W/kg

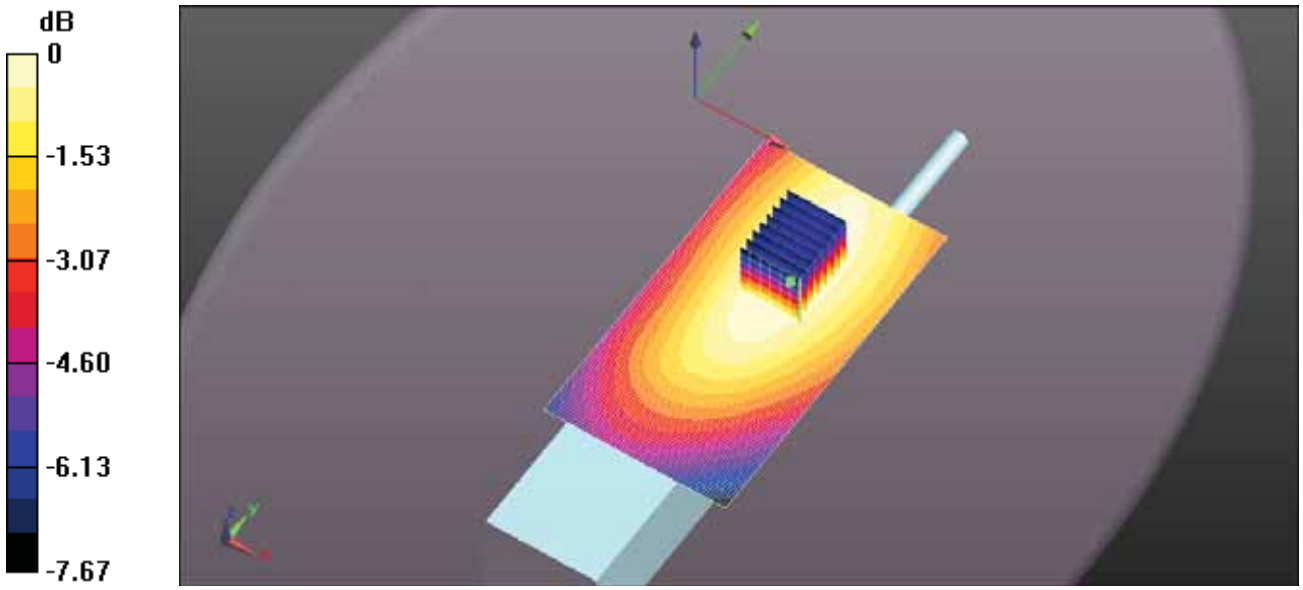

0 dB = 0.134 W/kg = -8.74 dBW/kg

Test Laboratory: Ultratech Group of Labs

FILE NAME: ICOM-489Q BODY FA-SC61VC 174MM 161.3MHZ.DA52:0

DUT: IC-F1100DT; Type: VHF Receiver; Serial: 32000201-0

Communication System: UID 10000, CW; Frequency: 161.3 MHz; Duty Cycle: 1:1
Medium parameters used: f = 162 MHz; σ = 0.843 S/m; ε_r = 64.096; ρ = 1000 kg/m^3 ; Phantom section: Flat Section ; Measurement Standard: DASY5 (IEEE/IEC/ANSI C63.19-2011)

DASY Configuration:

- Probe: ES3DV3 - SN3250; ConvF(7.29, 7.29, 7.29); Calibrated: 3/13/2018;
- Sensor-Surface: 3mm (Mechanical Surface Detection)
- Electronics: DAE4 Sn874; Calibrated: 8/21/2017
- Phantom: ELI 4.0; Type: QD OVA 001 BB; Serial: 1057
- DASY52 52.10.0(1446); SEMCAD X 14.6.10(7417)

Configuration Body for IC-F1100DT/Body Back, P=5W, d=0mm/Zoom Scan (7x7x7) (8x8x7)/Cube 0: Measurement grid: dx=5mm, dy=5mm, dz=5mm
Reference Value = 7.431 V/m; Power Drift = -0.31 dB
Peak SAR (extrapolated) = 0.0630 W/kg
SAR(1 g) = 0.043 W/kg; SAR(10 g) = 0.031 W/kg (SAR corrected for target medium)
Maximum value of SAR (measured) = 0.0487 W/kg

Configuration Body for IC-F1100DT/Body Back, P=5W, d=0mm/Area Scan (61x111x1):
Interpolated grid: dx=1.500 mm, dy=1.500 mm
Maximum value of SAR (interpolated) = 0.0493 W/kg

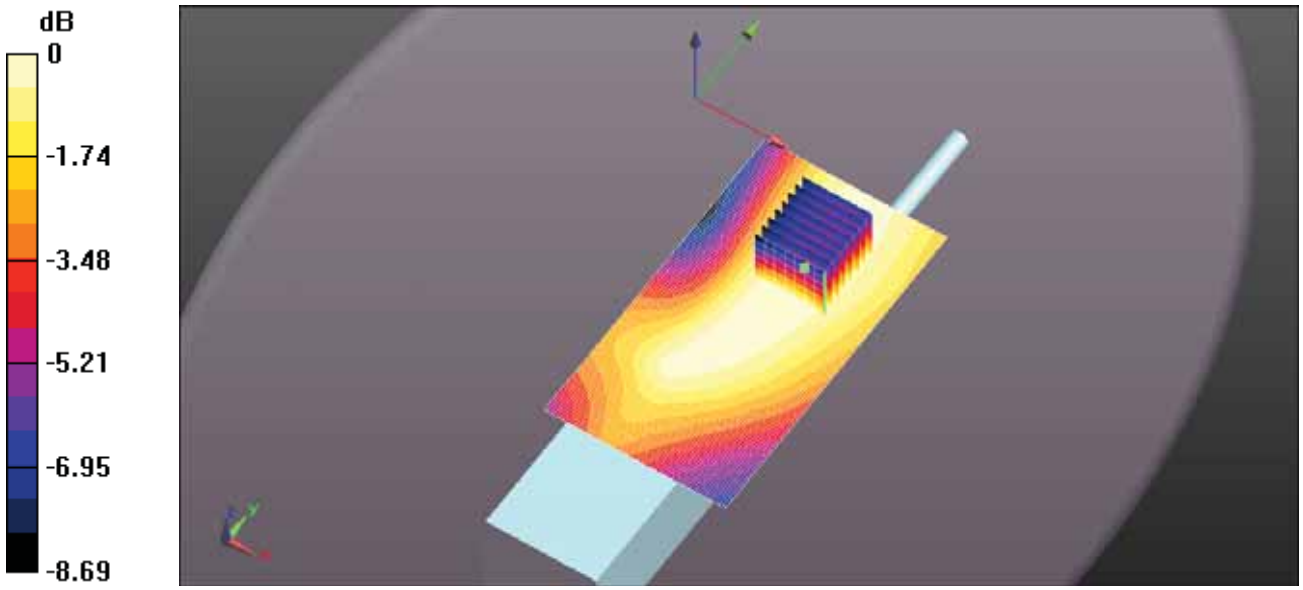

0 dB = 0.0487 W/kg = -13.13 dBW/kg

Test Laboratory: Ultratech Group of Labs

FILE NAME: ICOM-489Q BODY FA-SC61VC 174MM 167.7MHZ.DA52:0

DUT: IC-F1100DT; Type: VHF Receiver; Serial: 32000201-0

Communication System: UID 10000, CW; Frequency: 167.7 MHz; Duty Cycle: 1:1
Medium parameters used: f = 168 MHz; σ = 0.845 S/m; ε_r = 64.002; ρ = 1000 kg/m^3 ; Phantom section: Flat Section ; Measurement Standard: DASY5 (IEEE/IEC/ANSI C63.19-2011)

DASY Configuration:

- Probe: ES3DV3 - SN3250; ConvF(7.29, 7.29, 7.29); Calibrated: 3/13/2018;
- Sensor-Surface: 3mm (Mechanical Surface Detection)
- Electronics: DAE4 Sn874; Calibrated: 8/21/2017
- Phantom: ELI 4.0; Type: QD OVA 001 BB; Serial: 1057
- DASY52 52.10.0(1446); SEMCAD X 14.6.10(7417)

Configuration Body for IC-F1100DT/Body Back, P=5W, d=0mm/Zoom Scan (7x7x7) (8x7x7)/Cube 0: Measurement grid: dx=5mm, dy=5mm, dz=5mm
Reference Value = 13.15 V/m; Power Drift = 0.83 dB
Peak SAR (extrapolated) = 0.214 W/kg
SAR(1 g) = 0.145 W/kg; SAR(10 g) = 0.108 W/kg (SAR corrected for target medium)
Maximum value of SAR (measured) = 0.164 W/kg

Configuration Body for IC-F1100DT/Body Back, P=5W, d=0mm/Area Scan (61x111x1):
Interpolated grid: dx=1.500 mm, dy=1.500 mm
Maximum value of SAR (interpolated) = 0.147 W/kg

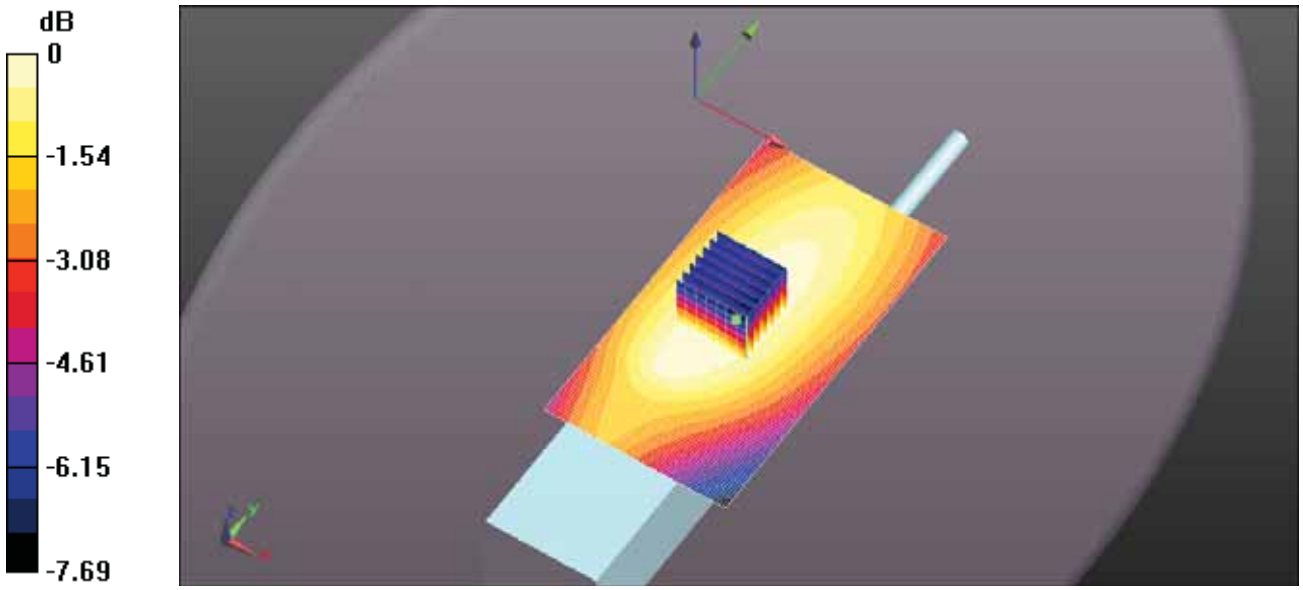

0 dB = 0.164 W/kg = -7.85 dBW/kg

Test Laboratory: Ultratech Group of Labs

FILE NAME: ICOM-489Q BODY FA-SC61VC 174MM 174MHZ.DA52:0

DUT: IC-F1100DT; Type: VHF Receiver; Serial: 32000201-0

Communication System: UID 10000, CW; Frequency: 174 MHz; Duty Cycle: 1:1
Medium parameters used: f = 174 MHz; σ = 0.85 S/m; ε_r = 63.898; ρ = 1000 kg/m^3 ; Phantom section: Flat Section ; Measurement Standard: DASY5 (IEEE/IEC/ANSI C63.19-2011)

DASY Configuration:

- Probe: ES3DV3 - SN3250; ConvF(7.29, 7.29, 7.29); Calibrated: 3/13/2018;
- Sensor-Surface: 3mm (Mechanical Surface Detection)
- Electronics: DAE4 Sn874; Calibrated: 8/21/2017
- Phantom: ELI 4.0; Type: QD OVA 001 BB; Serial: 1057
- DASY52 52.10.0(1446); SEMCAD X 14.6.10(7417)

Configuration Body for IC-F1100DT/Body Back, P=5W, d=0mm/Zoom Scan (7x7x7) (10x18x7)/Cube 0: Measurement grid: dx=5mm, dy=5mm, dz=5mm
Reference Value = 10.90 V/m; Power Drift = 1.52 dB
Peak SAR (extrapolated) = 0.278 W/kg
SAR(1 g) = 0.184 W/kg; SAR(10 g) = 0.131 W/kg (SAR corrected for target medium)
Maximum value of SAR (measured) = 0.205 W/kg

Configuration Body for IC-F1100DT/Body Back, P=5W, d=0mm/Area Scan (61x111x1):
Interpolated grid: dx=1.500 mm, dy=1.500 mm
Maximum value of SAR (interpolated) = 0.0995 W/kg

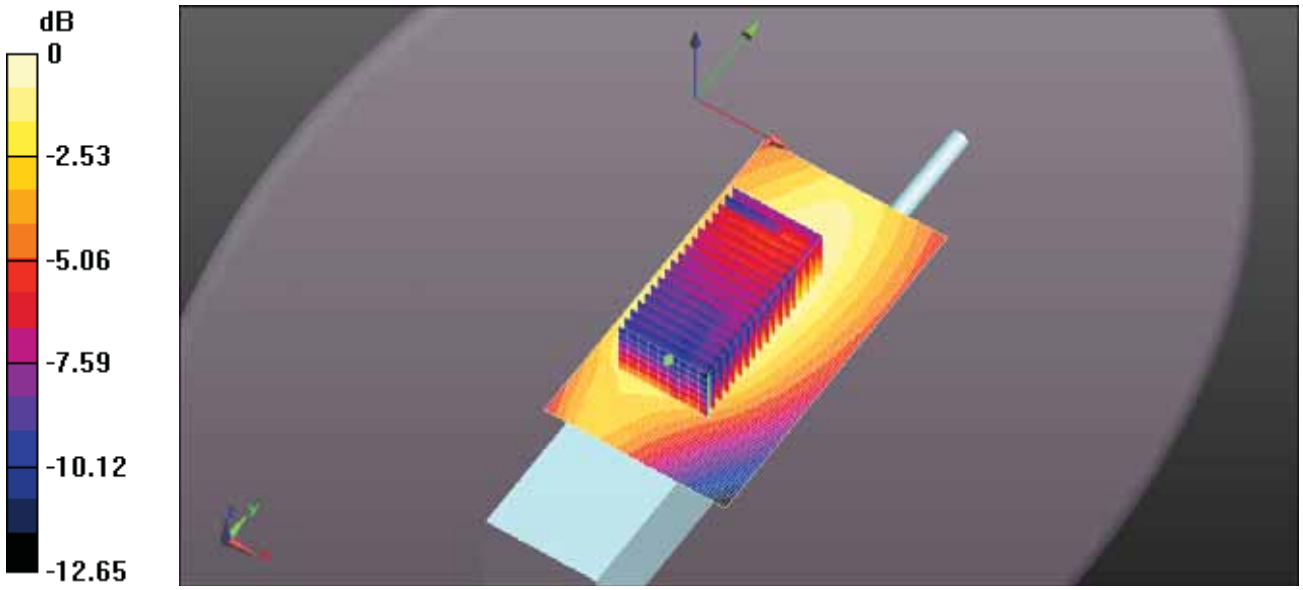

0 dB = 0.205 W/kg = -6.89 dBW/kg

Test Laboratory: Ultratech Group of Labs

FILE NAME: ICOM-489Q BODY FA-SC61VC 169MM 136MHZ.DA52:0

DUT: IC-F1100DT; Type: VHF Receiver; Serial: 32000201-0

Communication System: UID 10000, CW; Frequency: 136 MHz; Duty Cycle: 1:1
Medium parameters used: f = 136 MHz; σ = 0.835 S/m; ε_r = 63.621; ρ = 1000 kg/m^3 ; Phantom section: Flat Section ; Measurement Standard: DASY5 (IEEE/IEC/ANSI C63.19-2011)

DASY Configuration:

- Probe: ES3DV3 - SN3250; ConvF(7.29, 7.29, 7.29); Calibrated: 3/13/2018;
- Sensor-Surface: 3mm (Mechanical Surface Detection)
- Electronics: DAE4 Sn874; Calibrated: 8/21/2017
- Phantom: ELI 4.0; Type: QD OVA 001 BB; Serial: 1057
- DASY52 52.10.0(1446); SEMCAD X 14.6.10(7417)

Configuration Body for IC-F1100DT/Body Back, P=5W, d=0mm/Zoom Scan (7x7x7) (7x7x7)/Cube 0:

Measurement grid: dx=5mm, dy=5mm, dz=5mm
Reference Value = 32.89 V/m; Power Drift = -0.39 dB
Peak SAR (extrapolated) = 1.17 W/kg
SAR(1 g) = 0.797 W/kg; SAR(10 g) = 0.591 W/kg (SAR corrected for target medium)
Maximum value of SAR (measured) = 0.895 W/kg

Configuration Body for IC-F1100DT/Body Back, P=5W, d=0mm/Area Scan (61x111x1):

Interpolated grid: dx=1.500 mm, dy=1.500 mm
Maximum value of SAR (interpolated) = 0.881 W/kg

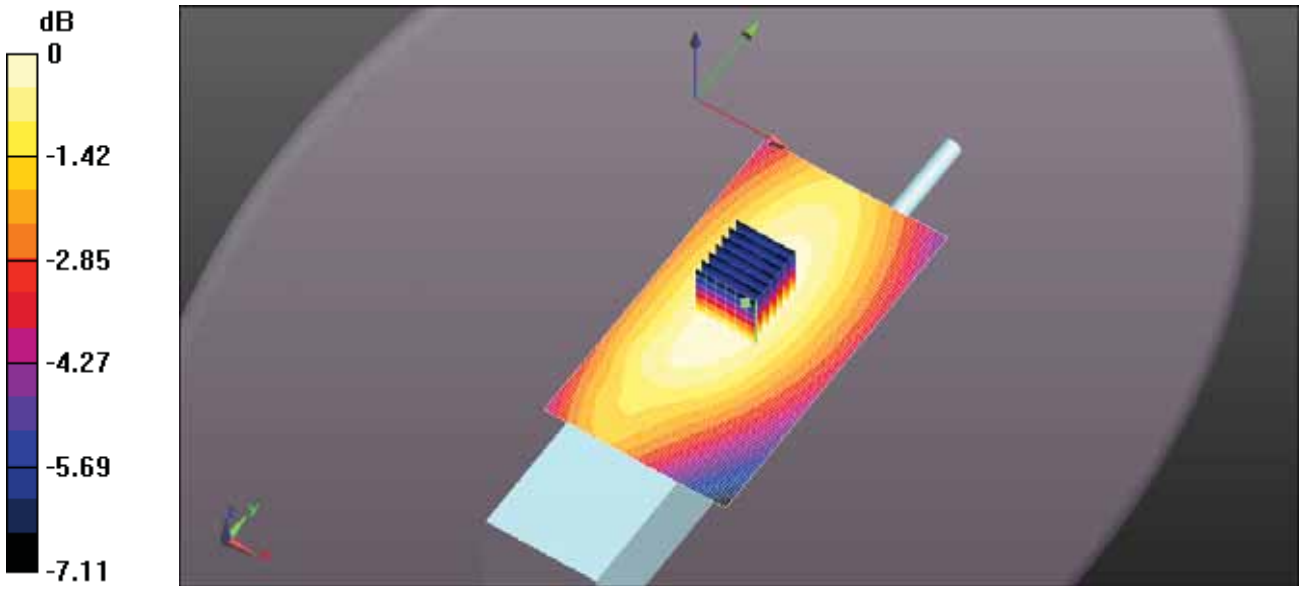

0 dB = 0.895 W/kg = -0.48 dBW/kg

Test Laboratory: Ultratech Group of Labs

FILE NAME: ICOM-489Q BODY FA-SC61VC 169MM 142.3MHZ.DA52:0

DUT: IC-F1100DT; Type: VHF Receiver; Serial: 32000201-0

Communication System: UID 10000, CW; Frequency: 142.3 MHz; Duty Cycle: 1:1
Medium parameters used (interpolated): f = 142.3 MHz; σ = 0.836 S/m; ε_r = 63.771; ρ = 1000 kg/m^3 ;
Phantom section: Flat Section ; Measurement Standard: DASY5 (IEEE/IEC/ANSI C63.19-2011)

DASY Configuration:

- Probe: ES3DV3 - SN3250; ConvF(7.29, 7.29, 7.29); Calibrated: 3/13/2018;
- Sensor-Surface: 3mm (Mechanical Surface Detection)
- Electronics: DAE4 Sn874; Calibrated: 8/21/2017
- Phantom: ELI 4.0; Type: QD OVA 001 BB; Serial: 1057
- DASY52 52.10.0(1446); SEMCAD X 14.6.10(7417)

Configuration Body for IC-F1100DT/Body Back, P=5W, d=0mm/Zoom Scan (7x7x7) (7x7x7)/Cube 0: Measurement grid: dx=5mm, dy=5mm, dz=5mm
Reference Value = 26.64 V/m; Power Drift = -0.75 dB
Peak SAR (extrapolated) = 0.750 W/kg
SAR(1 g) = 0.514 W/kg; SAR(10 g) = 0.381 W/kg (SAR corrected for target medium)
Maximum value of SAR (measured) = 0.576 W/kg

Configuration Body for IC-F1100DT/Body Back, P=5W, d=0mm/Area Scan (61x111x1):
Interpolated grid: dx=1.500 mm, dy=1.500 mm
Maximum value of SAR (interpolated) = 0.562 W/kg

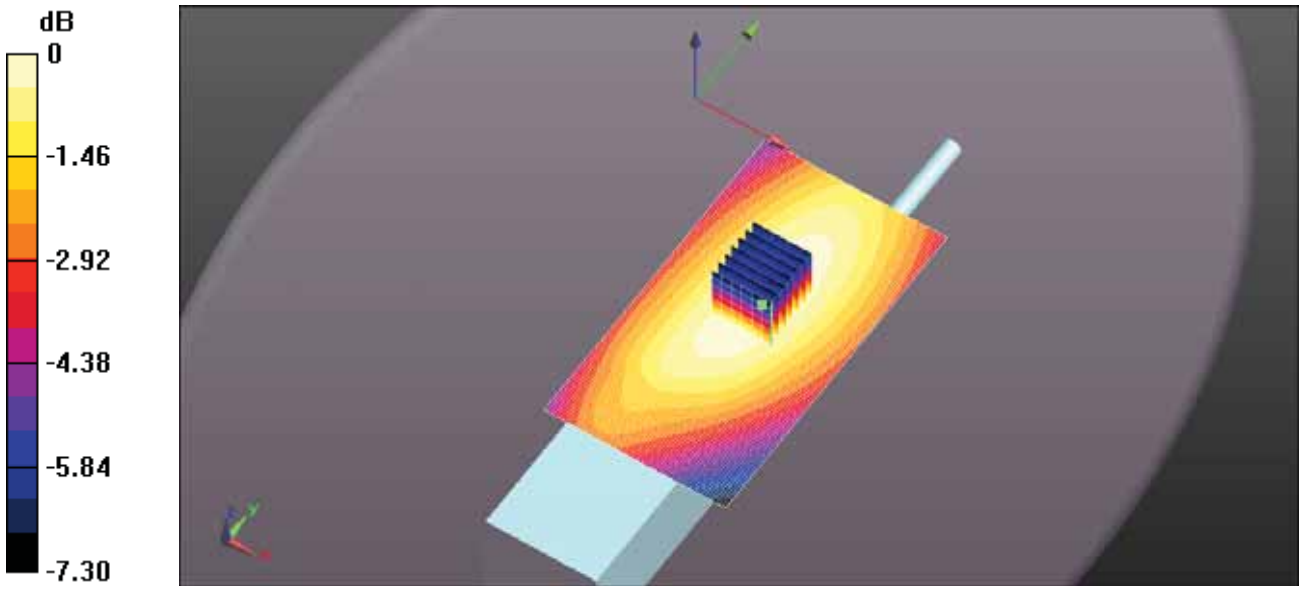

0 dB = 0.576 W/kg = -2.40 dBW/kg

Test Laboratory: Ultratech Group of Labs

FILE NAME: ICOM-489Q BODY FA-SC61VC 169MM 148.7MHZ.DA52:0

DUT: IC-F1100DT; Type: VHF Receiver; Serial: 32000201-0

Communication System: UID 10000, CW; Frequency: 148.7 MHz; Duty Cycle: 1:1
Medium parameters used (interpolated): f = 148.7 MHz; σ = 0.837 S/m; ε_r = 63.661; ρ = 1000 kg/m^3 ;
Phantom section: Flat Section ; Measurement Standard: DASY5 (IEEE/IEC/ANSI C63.19-2011)

DASY Configuration:

- Probe: ES3DV3 - SN3250; ConvF(7.29, 7.29, 7.29); Calibrated: 3/13/2018;
- Sensor-Surface: 3mm (Mechanical Surface Detection)
- Electronics: DAE4 Sn874; Calibrated: 8/21/2017
- Phantom: ELI 4.0; Type: QD OVA 001 BB; Serial: 1057
- DASY52 52.10.0(1446); SEMCAD X 14.6.10(7417)

Configuration Body for IC-F1100DT/Body Back, P=5W, d=0mm/Zoom Scan (7x7x7) (7x7x7)/Cube 0: Measurement grid: dx=5mm, dy=5mm, dz=5mm
Reference Value = 17.56 V/m; Power Drift = -0.95 dB
Peak SAR (extrapolated) = 0.365 W/kg
SAR(1 g) = 0.248 W/kg; SAR(10 g) = 0.182 W/kg (SAR corrected for target medium)
Maximum value of SAR (measured) = 0.280 W/kg

Configuration Body for IC-F1100DT/Body Back, P=5W, d=0mm/Area Scan (61x111x1):
Interpolated grid: dx=1.500 mm, dy=1.500 mm
Maximum value of SAR (interpolated) = 0.286 W/kg

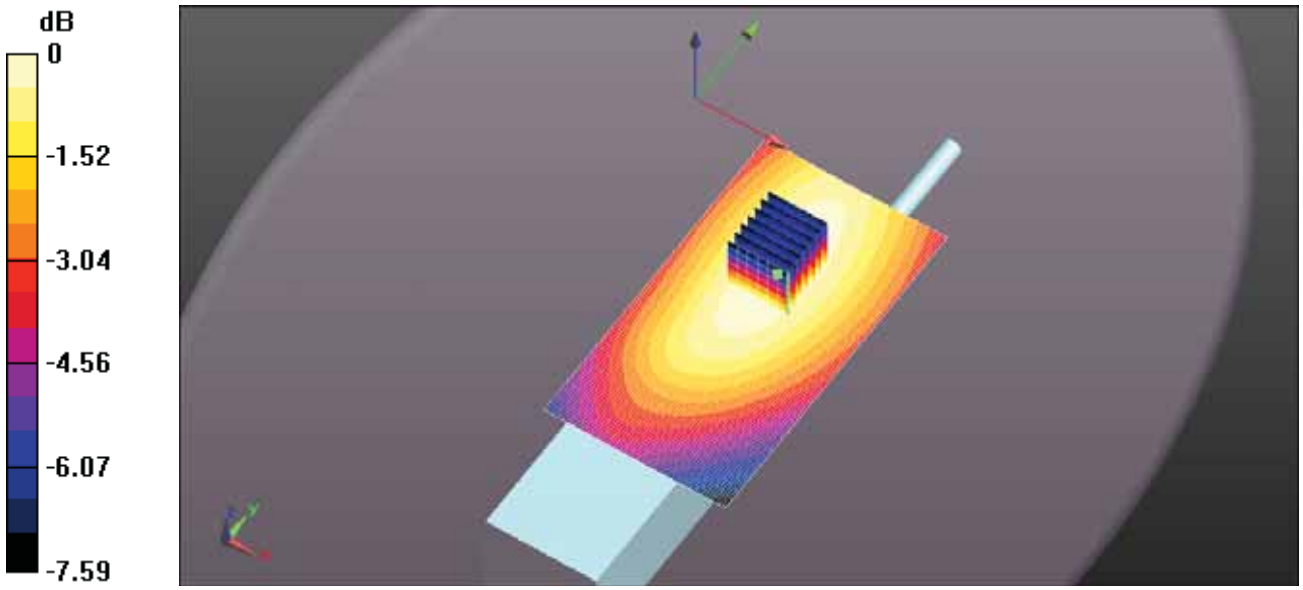

0 dB = 0.280 W/kg = -5.53 dBW/kg

Test Laboratory: Ultratech Group of Labs

FILE NAME: ICOM-489Q BODY FA-SC61VC 169MM 155MHZ.DA52:0

DUT: IC-F1100DT; Type: VHF Receiver; Serial: 32000201-0

Communication System: UID 10000, CW; Frequency: 155 MHz; Duty Cycle: 1:1
Medium parameters used (interpolated): f = 155 MHz; σ = 0.841 S/m; ε_r = 64.042; ρ = 1000 kg/m^3 ;
Phantom section: Flat Section ; Measurement Standard: DASY5 (IEEE/IEC/ANSI C63.19-2011)

DASY Configuration:

- Probe: ES3DV3 - SN3250; ConvF(7.29, 7.29, 7.29); Calibrated: 3/13/2018;
- Sensor-Surface: 3mm (Mechanical Surface Detection)
- Electronics: DAE4 Sn874; Calibrated: 8/21/2017
- Phantom: ELI 4.0; Type: QD OVA 001 BB; Serial: 1057
- DASY52 52.10.0(1446); SEMCAD X 14.6.10(7417)

Configuration Body for IC-F1100DT/Body Back, P=5W, d=0mm/Zoom Scan (7x7x7) (7x7x7)/Cube 0: Measurement grid: dx=5mm, dy=5mm, dz=5mm
Reference Value = 10.60 V/m; Power Drift = -0.53 dB
Peak SAR (extrapolated) = 0.171 W/kg
SAR(1 g) = 0.115 W/kg; SAR(10 g) = 0.084 W/kg (SAR corrected for target medium)
Maximum value of SAR (measured) = 0.130 W/kg

Configuration Body for IC-F1100DT/Body Back, P=5W, d=0mm/Area Scan (61x111x1):
Interpolated grid: dx=1.500 mm, dy=1.500 mm
Maximum value of SAR (interpolated) = 0.132 W/kg

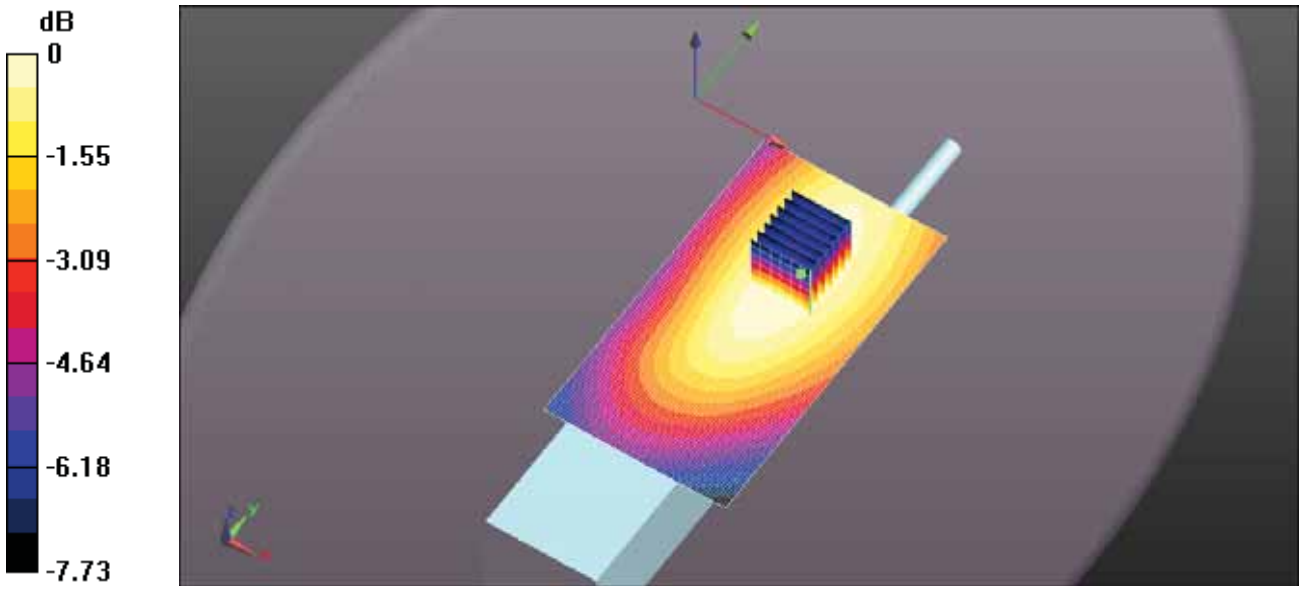

0 dB = 0.130 W/kg = -8.87 dBW/kg

Test Laboratory: Ultratech Group of Labs

FILE NAME: ICOM-489Q BODY FA-SC61VC 169MM 161.3MHZ.DA52:0

DUT: IC-F1100DT; Type: VHF Receiver; Serial: 32000201-0

Communication System: UID 10000, CW; Frequency: 161.3 MHz; Duty Cycle: 1:1
Medium parameters used: f = 162 MHz; σ = 0.843 S/m; ε_r = 64.096; ρ = 1000 kg/m^3 ; Phantom section: Flat Section ; Measurement Standard: DASY5 (IEEE/IEC/ANSI C63.19-2011)

DASY Configuration:

- Probe: ES3DV3 - SN3250; ConvF(7.29, 7.29, 7.29); Calibrated: 3/13/2018;
- Sensor-Surface: 3mm (Mechanical Surface Detection)
- Electronics: DAE4 Sn874; Calibrated: 8/21/2017
- Phantom: ELI 4.0; Type: QD OVA 001 BB; Serial: 1057
- DASY52 52.10.0(1446); SEMCAD X 14.6.10(7417)

Configuration Body for IC-F1100DT/Body Back, P=5W, d=0mm/Zoom Scan (7x7x7) (7x7x7)/Cube 0: Measurement grid: dx=5mm, dy=5mm, dz=5mm
Reference Value = 10.67 V/m; Power Drift = -0.13 dB
Peak SAR (extrapolated) = 0.165 W/kg
SAR(1 g) = 0.088 W/kg; SAR(10 g) = 0.058 W/kg (SAR corrected for target medium)
Maximum value of SAR (measured) = 0.102 W/kg

Configuration Body for IC-F1100DT/Body Back, P=5W, d=0mm/Area Scan (61x111x1):
Interpolated grid: dx=1.500 mm, dy=1.500 mm
Maximum value of SAR (interpolated) = 0.104 W/kg

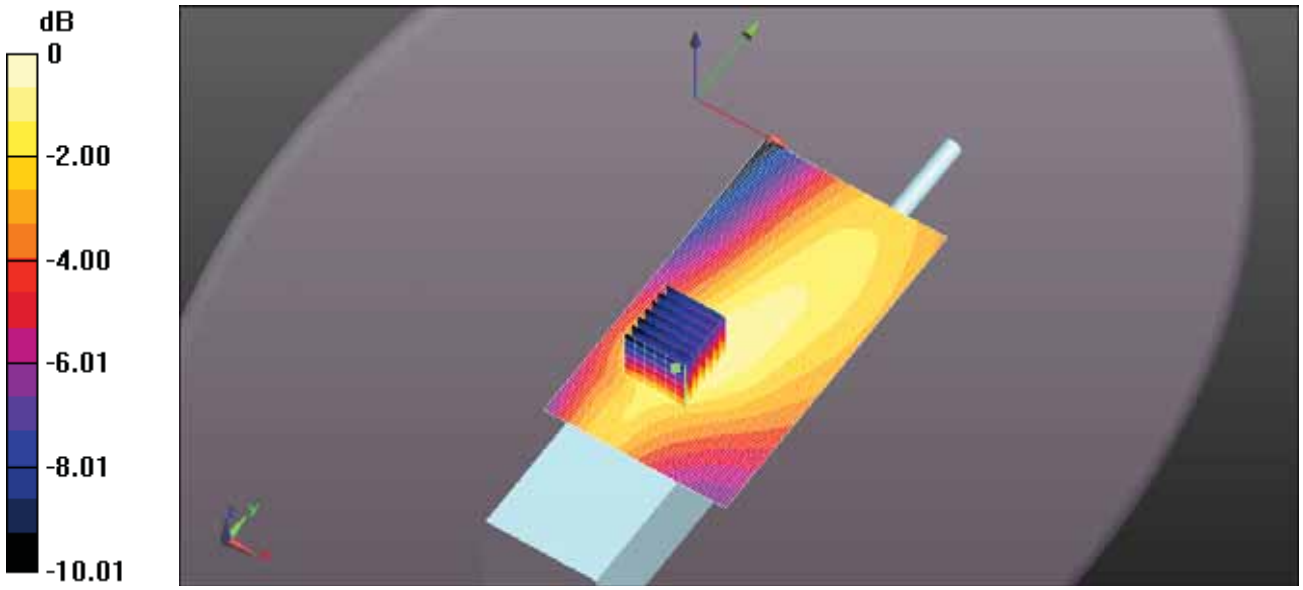

0 dB = 0.102 W/kg = -9.90 dBW/kg

Test Laboratory: Ultratech Group of Labs

FILE NAME: ICOM-489Q BODY FA-SC61VC 169MM 167.7MHZ.DA52:0

DUT: IC-F1100DT; Type: VHF Receiver; Serial: 32000201-0

Communication System: UID 10000, CW; Frequency: 167.7 MHz; Duty Cycle: 1:1
Medium parameters used: f = 168 MHz; σ = 0.845 S/m; ε_r = 64.002; ρ = 1000 kg/m^3 ; Phantom section: Flat Section ; Measurement Standard: DASY5 (IEEE/IEC/ANSI C63.19-2011)

DASY Configuration:

- Probe: ES3DV3 - SN3250; ConvF(7.29, 7.29, 7.29); Calibrated: 3/13/2018;
- Sensor-Surface: 3mm (Mechanical Surface Detection)
- Electronics: DAE4 Sn874; Calibrated: 8/21/2017
- Phantom: ELI 4.0; Type: QD OVA 001 BB; Serial: 1057
- DASY52 52.10.0(1446); SEMCAD X 14.6.10(7417)

Configuration Body for IC-F1100DT/Body Back, P=5W, d=0mm/Zoom Scan (7x7x7) (7x7x7)/Cube 0: Measurement grid: dx=5mm, dy=5mm, dz=5mm
Reference Value = 14.12 V/m; Power Drift = -0.09 dB
Peak SAR (extrapolated) = 0.222 W/kg
SAR(1 g) = 0.152 W/kg; SAR(10 g) = 0.113 W/kg (SAR corrected for target medium)
Maximum value of SAR (measured) = 0.170 W/kg

Configuration Body for IC-F1100DT/Body Back, P=5W, d=0mm/Area Scan (61x111x1):
Interpolated grid: dx=1.500 mm, dy=1.500 mm
Maximum value of SAR (interpolated) = 0.173 W/kg

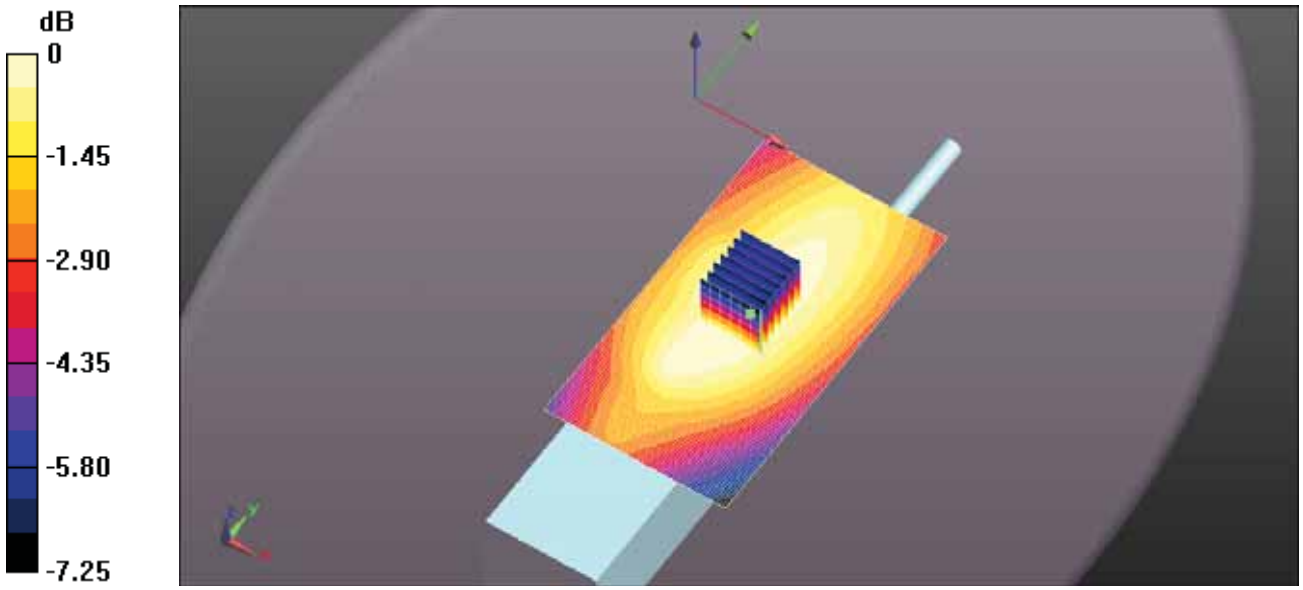

0 dB = 0.170 W/kg = -7.70 dBW/kg

Test Laboratory: Ultratech Group of Labs

FILE NAME: ICOM-489Q BODY FA-SC61VC 169MM 174MHZ.DA52:0

DUT: IC-F1100DT; Type: VHF Receiver; Serial: 32000201-0

Communication System: UID 10000, CW; Frequency: 174 MHz; Duty Cycle: 1:1
Medium parameters used: f = 174 MHz; σ = 0.85 S/m; ε_r = 63.898; ρ = 1000 kg/m^3 ; Phantom section: Flat Section ; Measurement Standard: DASY5 (IEEE/IEC/ANSI C63.19-2011)

DASY Configuration:

- Probe: ES3DV3 - SN3250; ConvF(7.29, 7.29, 7.29); Calibrated: 3/13/2018;
- Sensor-Surface: 3mm (Mechanical Surface Detection)
- Electronics: DAE4 Sn874; Calibrated: 8/21/2017
- Phantom: ELI 4.0; Type: QD OVA 001 BB; Serial: 1057
- DASY52 52.10.0(1446); SEMCAD X 14.6.10(7417)

Configuration Body for IC-F1100DT/Body Back, P=5W, d=0mm/Zoom Scan (7x7x7) (7x7x7)/Cube 0:

Measurement grid: dx=5mm, dy=5mm, dz=5mm
Reference Value = 34.50 V/m; Power Drift = 0.03 dB
Peak SAR (extrapolated) = 1.42 W/kg
SAR(1 g) = 0.977 W/kg; SAR(10 g) = 0.728 W/kg (SAR corrected for target medium)
Maximum value of SAR (measured) = 1.09 W/kg

Configuration Body for IC-F1100DT/Body Back, P=5W, d=0mm/Area Scan (61x111x1):

Interpolated grid: dx=1.500 mm, dy=1.500 mm
Maximum value of SAR (interpolated) = 1.07 W/kg

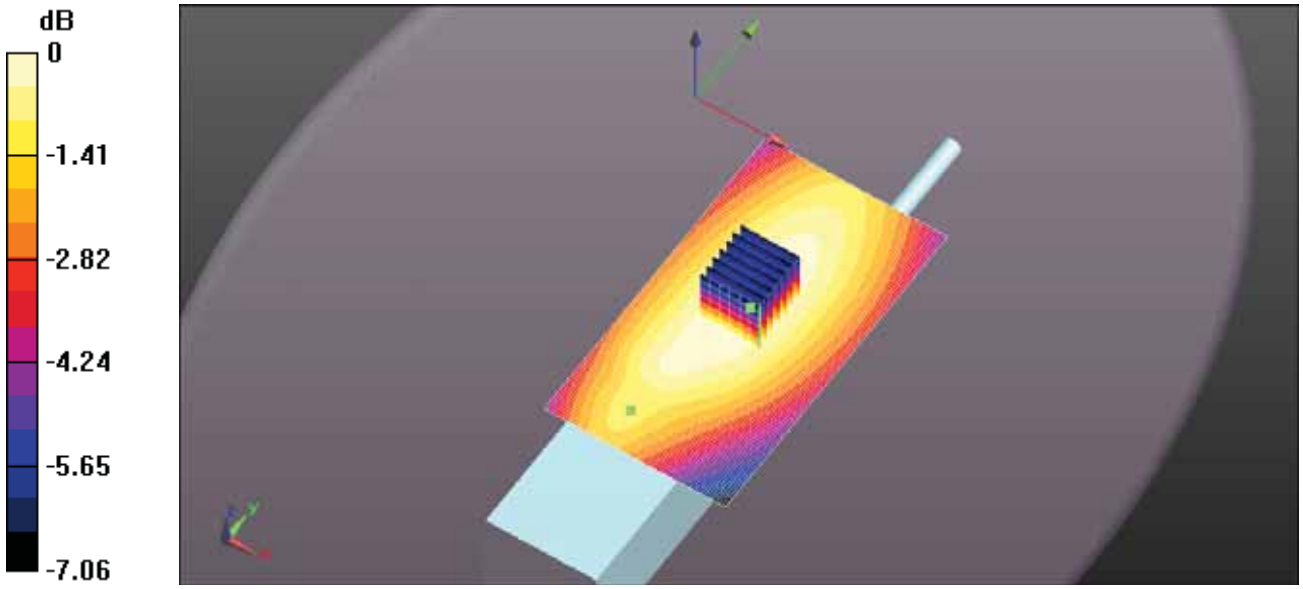

0 dB = 1.09 W/kg = 0.38 dBW/kg

Test Laboratory: Ultratech Group of Labs

FILE NAME: ICOM-489Q BODY FA-SC61VC 163MM 136MHZ.DA52:0

DUT: IC-F1100DT; Type: VHF Receiver; Serial: 32000201-0

Communication System: UID 10000, CW; Frequency: 136 MHz; Duty Cycle: 1:1
Medium parameters used: f = 136 MHz; σ = 0.835 S/m; ε_r = 63.621; ρ = 1000 kg/m^3 ; Phantom section: Flat Section ; Measurement Standard: DASY5 (IEEE/IEC/ANSI C63.19-2011)

DASY Configuration:

- Probe: ES3DV3 - SN3250; ConvF(7.29, 7.29, 7.29); Calibrated: 3/13/2018;
- Sensor-Surface: 3mm (Mechanical Surface Detection)
- Electronics: DAE4 Sn874; Calibrated: 8/21/2017
- Phantom: ELI 4.0; Type: QD OVA 001 BB; Serial: 1057
- DASY52 52.10.0(1446); SEMCAD X 14.6.10(7417)

Configuration Body for IC-F1100DT/Body Back, P=5W, d=0mm/Zoom Scan (7x7x7) (7x7x7)/Cube 0: Measurement grid: dx=5mm, dy=5mm, dz=5mm
Reference Value = 44.18 V/m; Power Drift = -0.06 dB
Peak SAR (extrapolated) = 2.20 W/kg
SAR(1 g) = 1.51 W/kg; SAR(10 g) = 1.13 W/kg (SAR corrected for target medium)
Maximum value of SAR (measured) = 1.69 W/kg

Configuration Body for IC-F1100DT/Body Back, P=5W, d=0mm/Area Scan (61x111x1):
Interpolated grid: dx=1.500 mm, dy=1.500 mm
Maximum value of SAR (interpolated) = 1.74 W/kg

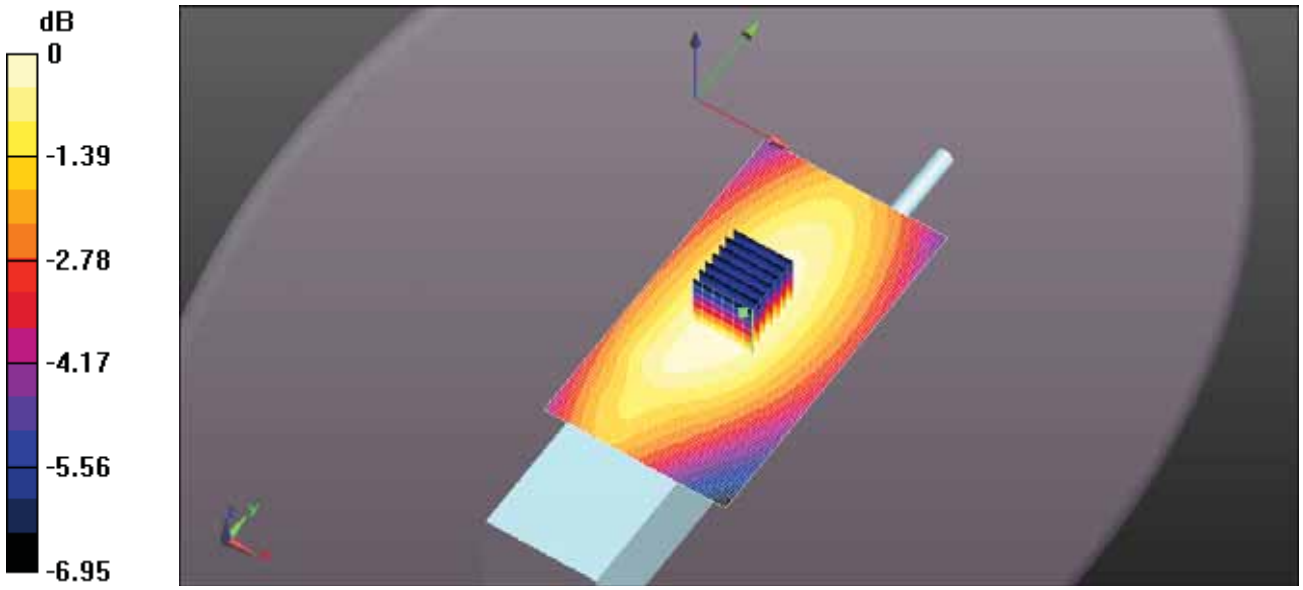

0 dB = 1.69 W/kg = 2.29 dBW/kg

Test Laboratory: Ultratech Group of Labs

FILE NAME: ICOM-489Q BODY FA-SC61VC 163MM 142.3MHZ.DA52:0

DUT: IC-F1100DT; Type: VHF Receiver; Serial: 32000201-0

Communication System: UID 10000, CW; Frequency: 142.3 MHz; Duty Cycle: 1:1
Medium parameters used (interpolated): f = 142.3 MHz; σ = 0.836 S/m; ε_r = 63.771; ρ = 1000 kg/m^3 ;
Phantom section: Flat Section ; Measurement Standard: DASY5 (IEEE/IEC/ANSI C63.19-2011)

DASY Configuration:

- Probe: ES3DV3 - SN3250; ConvF(7.29, 7.29, 7.29); Calibrated: 3/13/2018;
- Sensor-Surface: 3mm (Mechanical Surface Detection)
- Electronics: DAE4 Sn874; Calibrated: 8/21/2017
- Phantom: ELI 4.0; Type: QD OVA 001 BB; Serial: 1057
- DASY52 52.10.0(1446); SEMCAD X 14.6.10(7417)

Configuration Body for IC-F1100DT/Body Back, P=5W, d=0mm/Zoom Scan (7x7x7) (7x7x7)/Cube 0: Measurement grid: dx=5mm, dy=5mm, dz=5mm
Reference Value = 34.84 V/m; Power Drift = 0.02 dB
Peak SAR (extrapolated) = 1.44 W/kg
SAR(1 g) = 0.979 W/kg; SAR(10 g) = 0.725 W/kg (SAR corrected for target medium)
Maximum value of SAR (measured) = 1.10 W/kg

Configuration Body for IC-F1100DT/Body Back, P=5W, d=0mm/Area Scan (61x111x1):
Interpolated grid: dx=1.500 mm, dy=1.500 mm
Maximum value of SAR (interpolated) = 1.11 W/kg

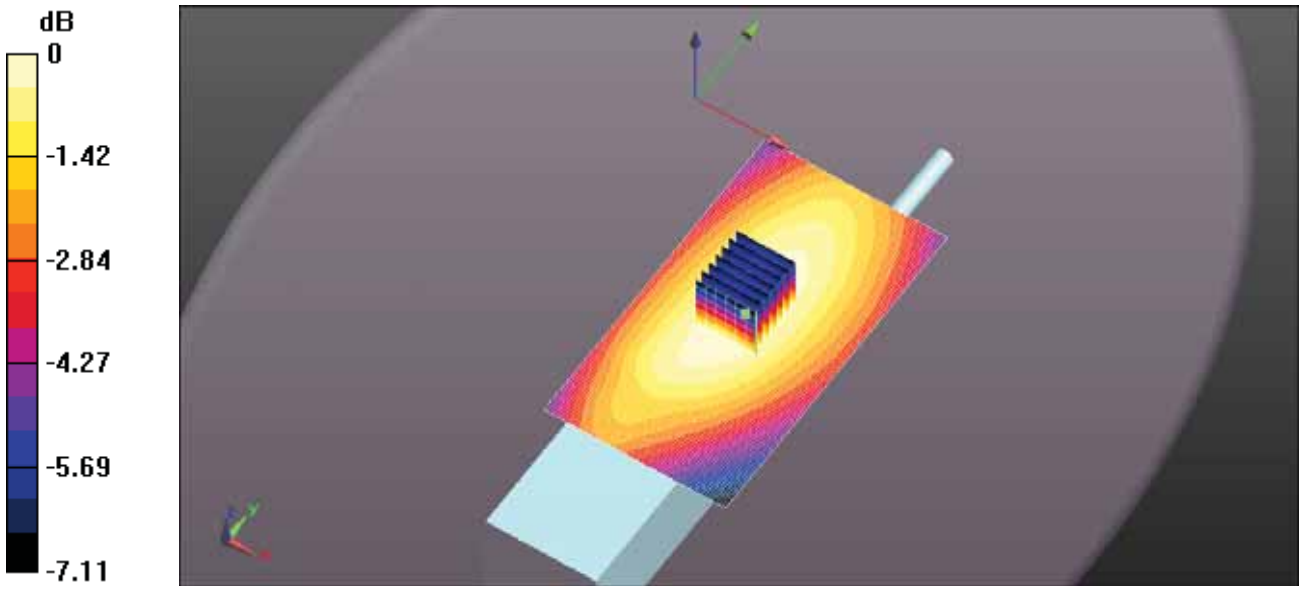

0 dB = 1.10 W/kg = 0.41 dBW/kg

Test Laboratory: Ultratech Group of Labs

FILE NAME: ICOM-489Q BODY FA-SC61VC 163MM 148.7MHZ.DA52:0

DUT: IC-F1100DT; Type: VHF Receiver; Serial: 32000201-0

Communication System: UID 10000, CW; Frequency: 148.7 MHz; Duty Cycle: 1:1
Medium parameters used (interpolated): f = 148.7 MHz; σ = 0.837 S/m; ε_r = 63.661; ρ = 1000 kg/m^3 ;
Phantom section: Flat Section ; Measurement Standard: DASY5 (IEEE/IEC/ANSI C63.19-2011)

DASY Configuration:

- Probe: ES3DV3 - SN3250; ConvF(7.29, 7.29, 7.29); Calibrated: 3/13/2018;
- Sensor-Surface: 3mm (Mechanical Surface Detection)
- Electronics: DAE4 Sn874; Calibrated: 8/21/2017
- Phantom: ELI 4.0; Type: QD OVA 001 BB; Serial: 1057
- DASY52 52.10.0(1446); SEMCAD X 14.6.10(7417)

Configuration Body for IC-F1100DT/Body Back, P=5W, d=0mm/Zoom Scan (7x7x7) (7x7x7)/Cube 0: Measurement grid: dx=5mm, dy=5mm, dz=5mm
Reference Value = 26.29 V/m; Power Drift = 0.01 dB
Peak SAR (extrapolated) = 0.879 W/kg
SAR(1 g) = 0.598 W/kg; SAR(10 g) = 0.441 W/kg (SAR corrected for target medium)
Maximum value of SAR (measured) = 0.673 W/kg

Configuration Body for IC-F1100DT/Body Back, P=5W, d=0mm/Area Scan (61x111x1):
Interpolated grid: dx=1.500 mm, dy=1.500 mm
Maximum value of SAR (interpolated) = 0.669 W/kg

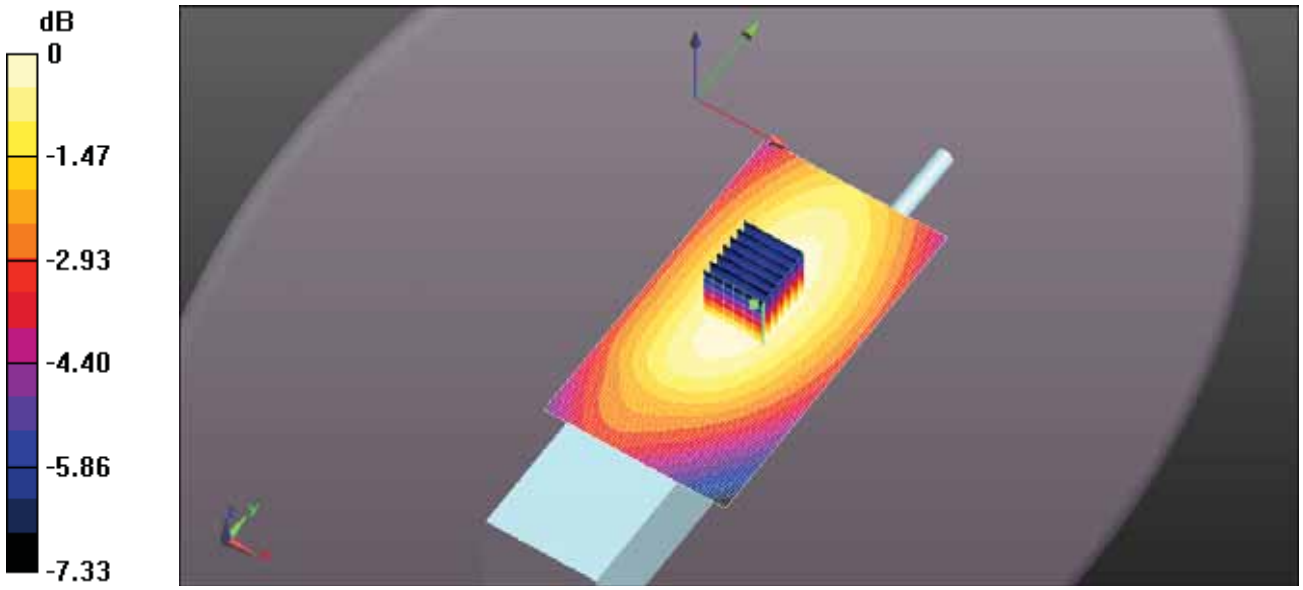

0 dB = 0.673 W/kg = -1.72 dBW/kg

Test Laboratory: Ultratech Group of Labs

FILE NAME: ICOM-489Q BODY FA-SC61VC 163MM 155MHZ.DA52:0

DUT: IC-F1100DT; Type: VHF Receiver; Serial: 32000201-0

Communication System: UID 10000, CW; Frequency: 155 MHz; Duty Cycle: 1:1
Medium parameters used (interpolated): f = 155 MHz; σ = 0.841 S/m; ε_r = 64.042; ρ = 1000 kg/m^3 ;
Phantom section: Flat Section ; Measurement Standard: DASY5 (IEEE/IEC/ANSI C63.19-2011)

DASY Configuration:

- Probe: ES3DV3 - SN3250; ConvF(7.29, 7.29, 7.29); Calibrated: 3/13/2018;
- Sensor-Surface: 3mm (Mechanical Surface Detection)
- Electronics: DAE4 Sn874; Calibrated: 8/21/2017
- Phantom: ELI 4.0; Type: QD OVA 001 BB; Serial: 1057
- DASY52 52.10.0(1446); SEMCAD X 14.6.10(7417)

Configuration Body for IC-F1100DT/Body Back, P=5W, d=0mm/Zoom Scan (7x7x7) (7x8x7)/Cube 0: Measurement grid: dx=5mm, dy=5mm, dz=5mm
Reference Value = 17.55 V/m; Power Drift = -0.10 dB
Peak SAR (extrapolated) = 0.408 W/kg
SAR(1 g) = 0.279 W/kg; SAR(10 g) = 0.206 W/kg (SAR corrected for target medium)
Maximum value of SAR (measured) = 0.314 W/kg

Configuration Body for IC-F1100DT/Body Back, P=5W, d=0mm/Area Scan (61x111x1):
Interpolated grid: dx=1.500 mm, dy=1.500 mm
Maximum value of SAR (interpolated) = 0.318 W/kg

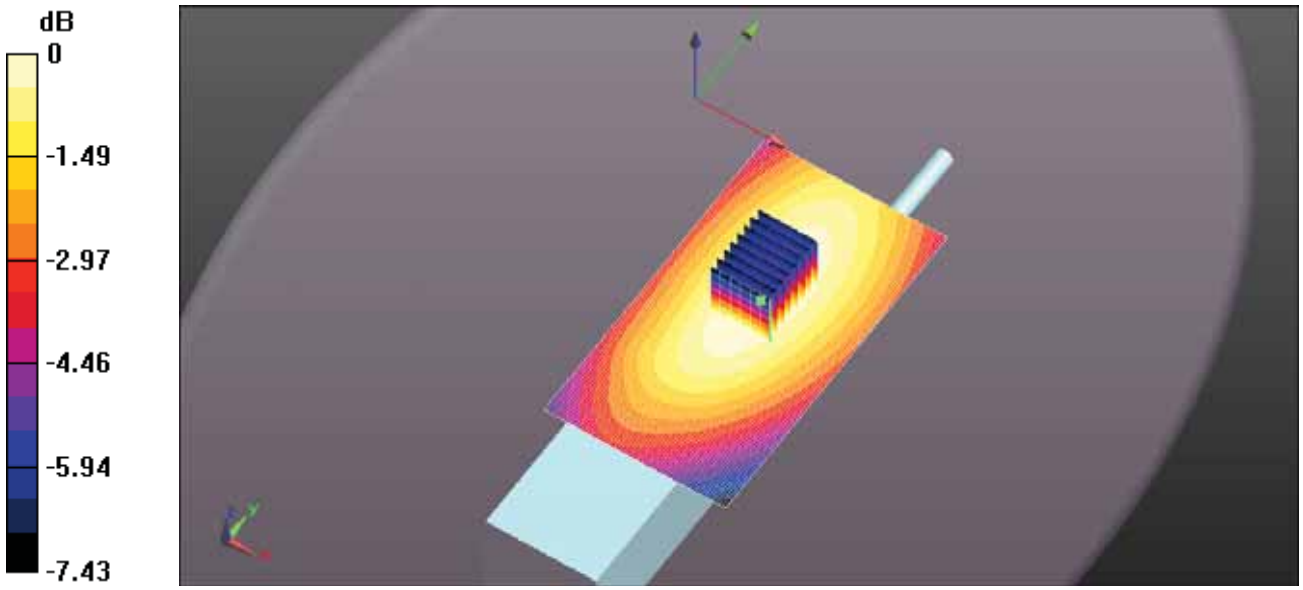

0 dB = 0.314 W/kg = -5.03 dBW/kg

Test Laboratory: Ultratech Group of Labs

FILE NAME: ICOM-489Q BODY FA-SC61VC 163MM 161.3MHZ.DA52:0

DUT: IC-F1100DT; Type: VHF Receiver; Serial: 32000201-0

Communication System: UID 10000, CW; Frequency: 161.3 MHz; Duty Cycle: 1:1
Medium parameters used: f = 162 MHz; σ = 0.843 S/m; ε_r = 64.096; ρ = 1000 kg/m^3 ; Phantom section: Flat Section ; Measurement Standard: DASY5 (IEEE/IEC/ANSI C63.19-2011)

DASY Configuration:

- Probe: ES3DV3 - SN3250; ConvF(7.29, 7.29, 7.29); Calibrated: 3/13/2018;
- Sensor-Surface: 3mm (Mechanical Surface Detection)
- Electronics: DAE4 Sn874; Calibrated: 8/21/2017
- Phantom: ELI 4.0; Type: QD OVA 001 BB; Serial: 1057
- DASY52 52.10.0(1446); SEMCAD X 14.6.10(7417)

Configuration Body for IC-F1100DT/Body Back, P=5W, d=0mm/Zoom Scan (7x7x7) (8x8x7)/Cube 0: Measurement grid: dx=5mm, dy=5mm, dz=5mm
Reference Value = 8.895 V/m; Power Drift = -0.11 dB
Peak SAR (extrapolated) = 0.138 W/kg
SAR(1 g) = 0.092 W/kg; SAR(10 g) = 0.067 W/kg (SAR corrected for target medium)
Maximum value of SAR (measured) = 0.105 W/kg

Configuration Body for IC-F1100DT/Body Back, P=5W, d=0mm/Area Scan (61x111x1):
Interpolated grid: dx=1.500 mm, dy=1.500 mm
Maximum value of SAR (interpolated) = 0.104 W/kg

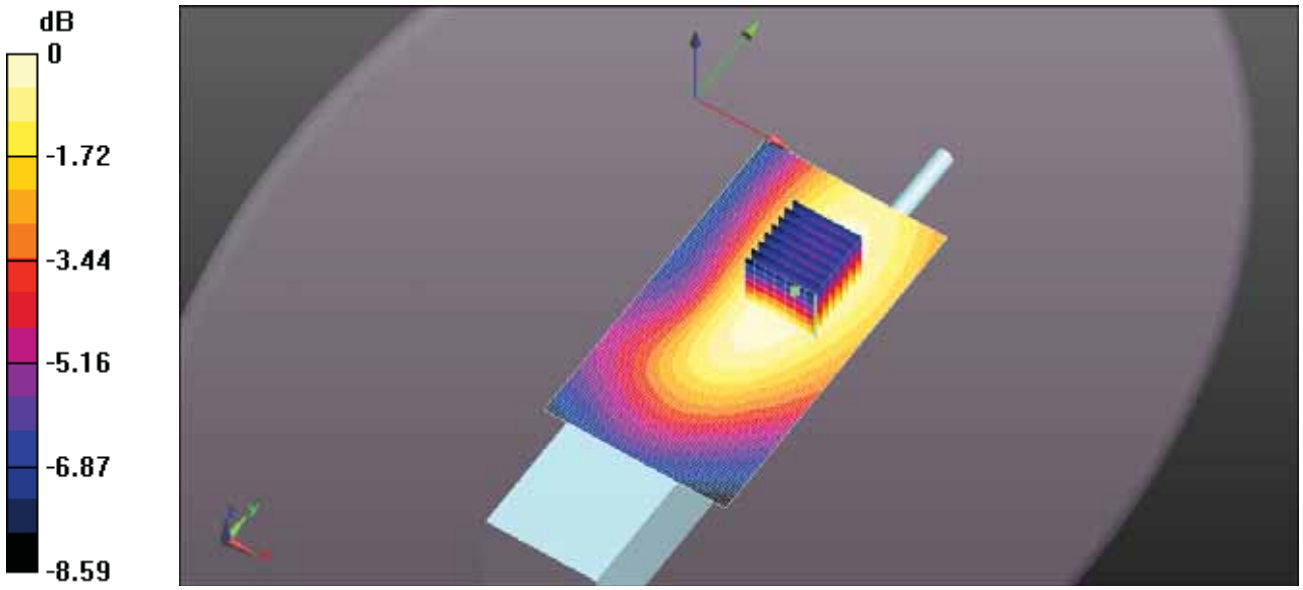

0 dB = 0.105 W/kg = -9.81 dBW/kg

Test Laboratory: Ultratech Group of Labs

FILE NAME: ICOM-489Q BODY FA-SC61VC 163MM 167.7MHZ.DA52:0

DUT: IC-F1100DT; Type: VHF Receiver; Serial: 32000201-0

Communication System: UID 10000, CW; Frequency: 167.7 MHz; Duty Cycle: 1:1
Medium parameters used: f = 168 MHz; σ = 0.845 S/m; ε_r = 64.002; ρ = 1000 kg/m^3 ; Phantom section: Flat Section ; Measurement Standard: DASY5 (IEEE/IEC/ANSI C63.19-2011)

DASY Configuration:

- Probe: ES3DV3 - SN3250; ConvF(7.29, 7.29, 7.29); Calibrated: 3/13/2018;
- Sensor-Surface: 3mm (Mechanical Surface Detection)
- Electronics: DAE4 Sn874; Calibrated: 8/21/2017
- Phantom: ELI 4.0; Type: QD OVA 001 BB; Serial: 1057
- DASY52 52.10.0(1446); SEMCAD X 14.6.10(7417)

Configuration Body for IC-F1100DT/Body Back, P=5W, d=0mm/Zoom Scan (7x7x7) (10x16x7)/Cube 0: Measurement grid: dx=5mm, dy=5mm, dz=5mm
Reference Value = 13.90 V/m; Power Drift = -1.90 dB
Peak SAR (extrapolated) = 0.662 W/kg
SAR(1 g) = 0.214 W/kg; SAR(10 g) = 0.159 W/kg (SAR corrected for target medium)
Maximum value of SAR (measured) = 0.238 W/kg

Configuration Body for IC-F1100DT/Body Back, P=5W, d=0mm/Area Scan (61x111x1):
Interpolated grid: dx=1.500 mm, dy=1.500 mm
Maximum value of SAR (interpolated) = 0.164 W/kg

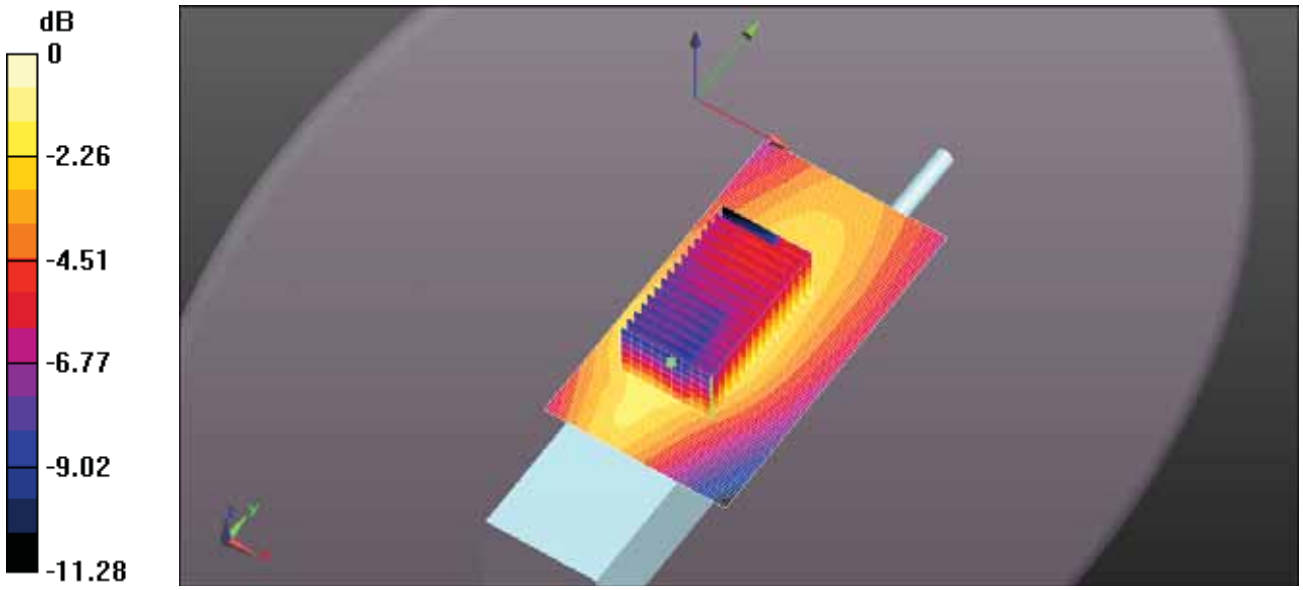

0 dB = 0.238 W/kg = -6.23 dBW/kg

Test Laboratory: Ultratech Group of Labs

FILE NAME: ICOM-489Q BODY FA-SC61VC 163MM 174MHZ.DA52:0

DUT: IC-F1100DT; Type: VHF Receiver; Serial: 32000201-0

Communication System: UID 10000, CW; Frequency: 174 MHz; Duty Cycle: 1:1
Medium parameters used: f = 174 MHz; σ = 0.85 S/m; ε_r = 63.898; ρ = 1000 kg/m^3 ; Phantom section: Flat Section ; Measurement Standard: DASY5 (IEEE/IEC/ANSI C63.19-2011)

DASY Configuration:

- Probe: ES3DV3 - SN3250; ConvF(7.29, 7.29, 7.29); Calibrated: 3/13/2018;
- Sensor-Surface: 3mm (Mechanical Surface Detection)
- Electronics: DAE4 Sn874; Calibrated: 8/21/2017
- Phantom: ELI 4.0; Type: QD OVA 001 BB; Serial: 1057
- DASY52 52.10.0(1446); SEMCAD X 14.6.10(7417)

Configuration Body for IC-F1100DT/Body Back, P=5W, d=0mm/Zoom Scan (7x7x7) (7x7x7)/Cube 0:

Measurement grid: dx=5mm, dy=5mm, dz=5mm
Reference Value = 15.53 V/m; Power Drift = 0.40 dB
Peak SAR (extrapolated) = 0.297 W/kg
SAR(1 g) = 0.207 W/kg; SAR(10 g) = 0.156 W/kg (SAR corrected for target medium)
Maximum value of SAR (measured) = 0.231 W/kg

Configuration Body for IC-F1100DT/Body Back, P=5W, d=0mm/Area Scan (61x111x1):

Interpolated grid: dx=1.500 mm, dy=1.500 mm
Maximum value of SAR (interpolated) = 0.210 W/kg

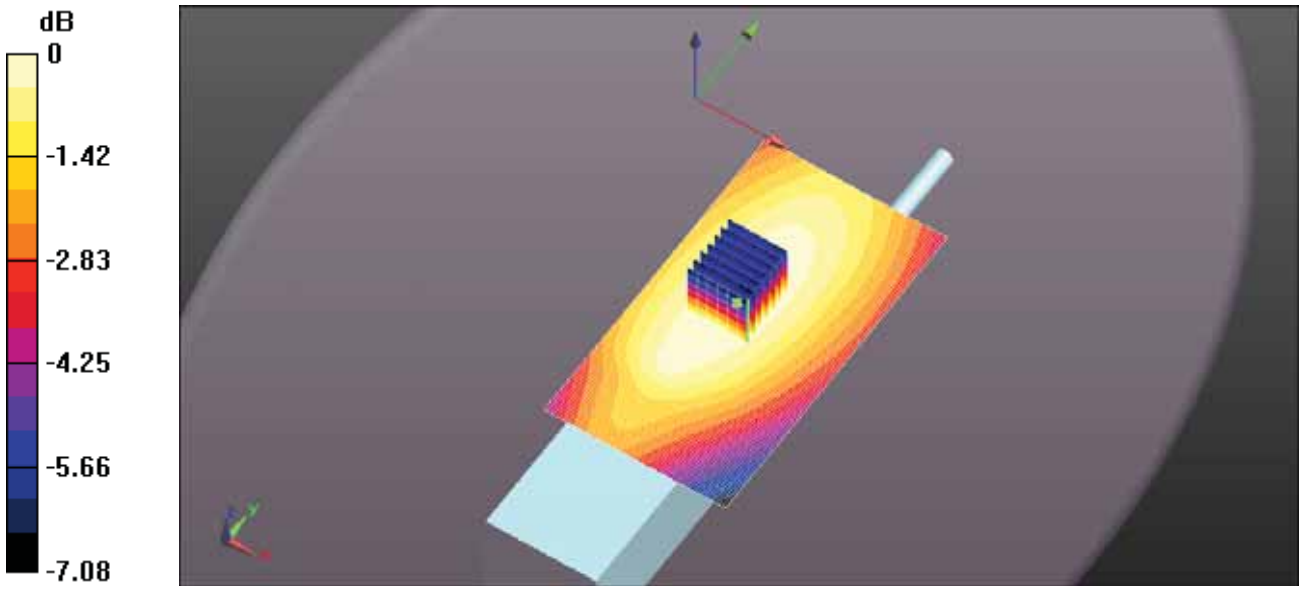

0 dB = 0.231 W/kg = -6.37 dBW/kg

Test Laboratory: Ultratech Group of Labs

FILE NAME: ICOM-489Q BODY FA-SC61VC 157MM 136MHZ.DA52:0

DUT: IC-F1100DT; Type: VHF Receiver; Serial: 32000201-0

Communication System: UID 10000, CW; Frequency: 136 MHz; Duty Cycle: 1:1
Medium parameters used: f = 136 MHz; σ = 0.835 S/m; ε_r = 63.621; ρ = 1000 kg/m^3 ; Phantom section: Flat Section ; Measurement Standard: DASY5 (IEEE/IEC/ANSI C63.19-2011)

DASY Configuration:

- Probe: ES3DV3 - SN3250; ConvF(7.29, 7.29, 7.29); Calibrated: 3/13/2018;
- Sensor-Surface: 3mm (Mechanical Surface Detection)
- Electronics: DAE4 Sn874; Calibrated: 8/21/2017
- Phantom: ELI 4.0; Type: QD OVA 001 BB; Serial: 1057
- DASY52 52.10.0(1446); SEMCAD X 14.6.10(7417)

Configuration Body for IC-F1100DT/Body Back, P=5W, d=0mm/Zoom Scan (7x7x7) (7x7x7)/Cube 0: Measurement grid: dx=5mm, dy=5mm, dz=5mm
Reference Value = 41.50 V/m; Power Drift = -0.15 dB
Peak SAR (extrapolated) = 1.93 W/kg
SAR(1 g) = 1.33 W/kg; SAR(10 g) = 0.984 W/kg (SAR corrected for target medium)
Maximum value of SAR (measured) = 1.49 W/kg

Configuration Body for IC-F1100DT/Body Back, P=5W, d=0mm/Area Scan (61x111x1):
Interpolated grid: dx=1.500 mm, dy=1.500 mm
Maximum value of SAR (interpolated) = 1.52 W/kg

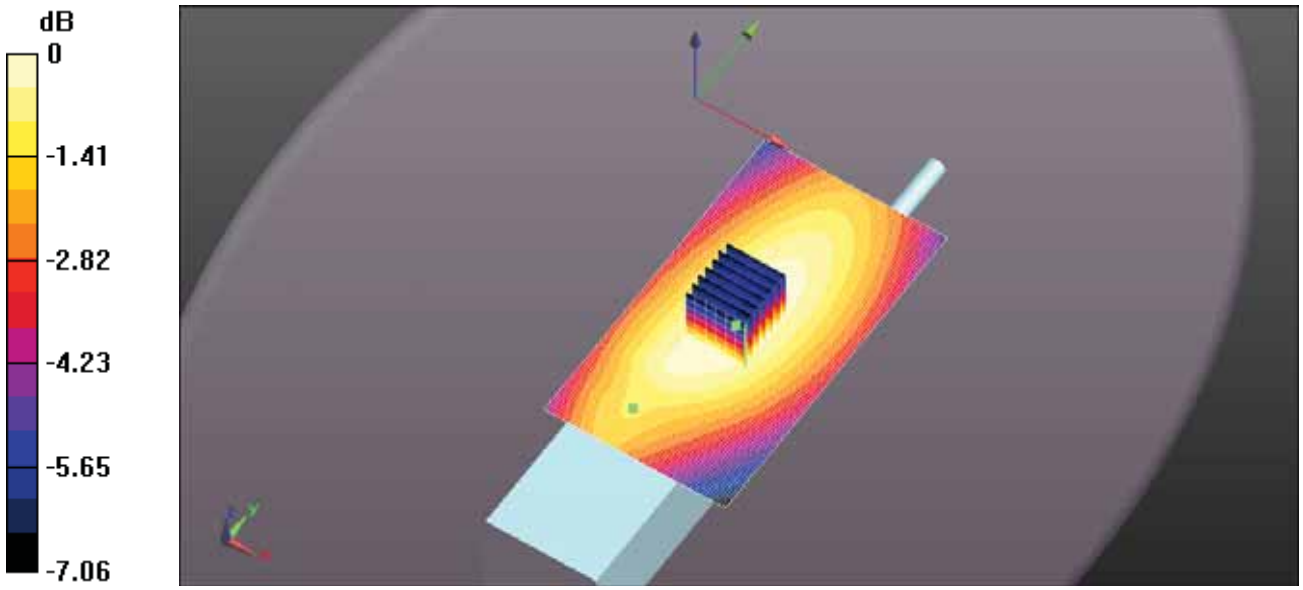

0 dB = 1.49 W/kg = 1.72 dBW/kg

Test Laboratory: Ultratech Group of Labs

FILE NAME: ICOM-489Q BODY FA-SC61VC 157MM 142.3MHZ.DA52:0

DUT: IC-F1100DT; Type: VHF Receiver; Serial: 32000201-0

Communication System: UID 10000, CW; Frequency: 142.3 MHz; Duty Cycle: 1:1
Medium parameters used (interpolated): f = 142.3 MHz; σ = 0.836 S/m; ε_r = 63.771; ρ = 1000 kg/m^3 ;
Phantom section: Flat Section ; Measurement Standard: DASY5 (IEEE/IEC/ANSI C63.19-2011)

DASY Configuration:

- Probe: ES3DV3 - SN3250; ConvF(7.29, 7.29, 7.29); Calibrated: 3/13/2018;
- Sensor-Surface: 3mm (Mechanical Surface Detection)
- Electronics: DAE4 Sn874; Calibrated: 8/21/2017
- Phantom: ELI 4.0; Type: QD OVA 001 BB; Serial: 1057
- DASY52 52.10.0(1446); SEMCAD X 14.6.10(7417)

Configuration Body for IC-F1100DT/Body Back, P=5W, d=0mm/Zoom Scan (7x7x7) (7x7x7)/Cube 0: Measurement grid: dx=5mm, dy=5mm, dz=5mm
Reference Value = 37.82 V/m; Power Drift = -0.03 dB
Peak SAR (extrapolated) = 1.70 W/kg
SAR(1 g) = 1.16 W/kg; SAR(10 g) = 0.854 W/kg (SAR corrected for target medium)
Maximum value of SAR (measured) = 1.30 W/kg

Configuration Body for IC-F1100DT/Body Back, P=5W, d=0mm/Area Scan (61x111x1):
Interpolated grid: dx=1.500 mm, dy=1.500 mm
Maximum value of SAR (interpolated) = 1.32 W/kg

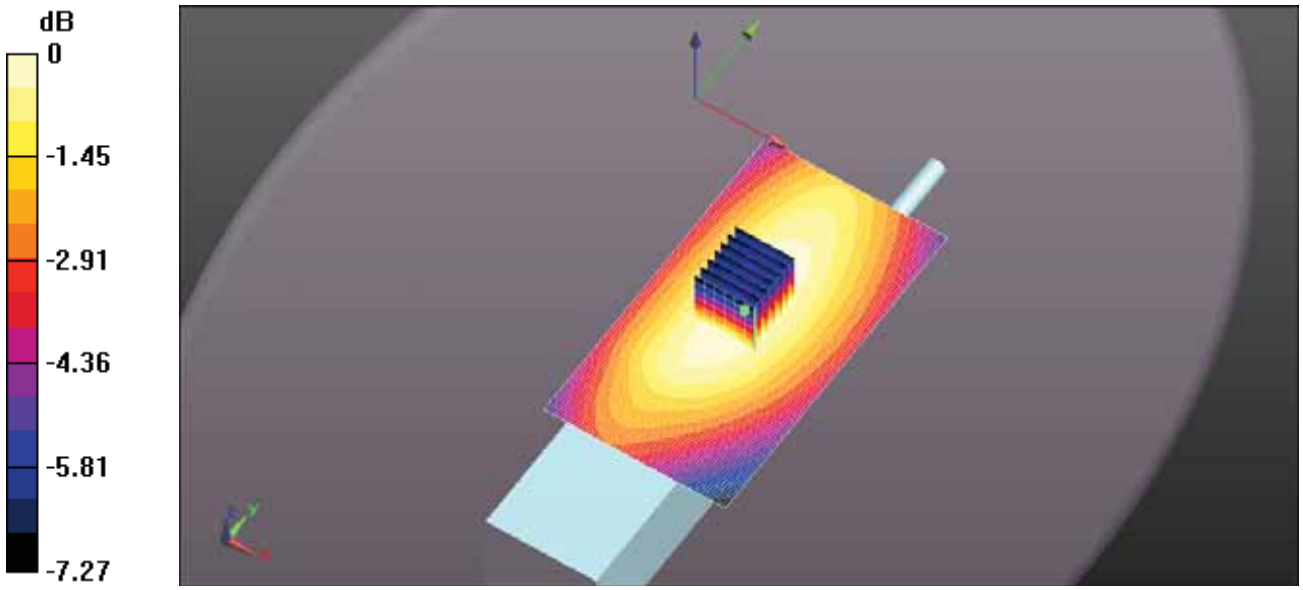

0 dB = 1.30 W/kg = 1.15 dBW/kg

Test Laboratory: Ultratech Group of Labs

FILE NAME: ICOM-489Q BODY FA-SC61VC 157MM 148.7MHZ.DA52:0

DUT: IC-F1100DT; Type: VHF Receiver; Serial: 32000201-0

Communication System: UID 10000, CW; Frequency: 148.7 MHz; Duty Cycle: 1:1
Medium parameters used (interpolated): f = 148.7 MHz; σ = 0.837 S/m; ε_r = 63.661; ρ = 1000 kg/m^3 ;
Phantom section: Flat Section ; Measurement Standard: DASY5 (IEEE/IEC/ANSI C63.19-2011)

DASY Configuration:

- Probe: ES3DV3 - SN3250; ConvF(7.29, 7.29, 7.29); Calibrated: 3/13/2018;
- Sensor-Surface: 3mm (Mechanical Surface Detection)
- Electronics: DAE4 Sn874; Calibrated: 8/21/2017
- Phantom: ELI 4.0; Type: QD OVA 001 BB; Serial: 1057
- DASY52 52.10.0(1446); SEMCAD X 14.6.10(7417)

Configuration Body for IC-F1100DT/Body Back, P=5W, d=0mm/Zoom Scan (7x7x7) (7x7x7)/Cube 0: Measurement grid: dx=5mm, dy=5mm, dz=5mm
Reference Value = 30.76 V/m; Power Drift = -0.07 dB
Peak SAR (extrapolated) = 1.16 W/kg
SAR(1 g) = 0.785 W/kg; SAR(10 g) = 0.576 W/kg (SAR corrected for target medium)
Maximum value of SAR (measured) = 0.886 W/kg

Configuration Body for IC-F1100DT/Body Back, P=5W, d=0mm/Area Scan (61x111x1):
Interpolated grid: dx=1.500 mm, dy=1.500 mm
Maximum value of SAR (interpolated) = 0.897 W/kg

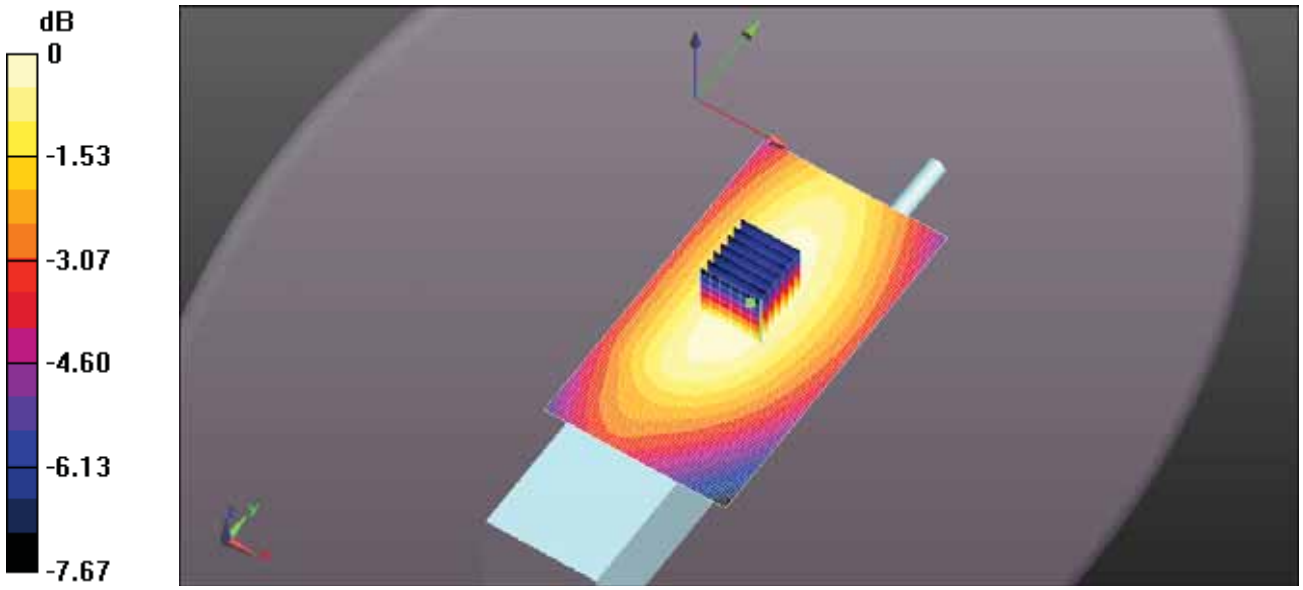

0 dB = 0.886 W/kg = -0.53 dBW/kg

Test Laboratory: Ultratech Group of Labs

FILE NAME: ICOM-489Q BODY FA-SC61VC 157MM 155MHZ.DA52:0

DUT: IC-F1100DT; Type: VHF Receiver; Serial: 32000201-0

Communication System: UID 10000, CW; Frequency: 155 MHz; Duty Cycle: 1:1
Medium parameters used (interpolated): f = 155 MHz; σ = 0.841 S/m; ε_r = 64.042; ρ = 1000 kg/m^3 ;
Phantom section: Flat Section ; Measurement Standard: DASY5 (IEEE/IEC/ANSI C63.19-2011)

DASY Configuration:

- Probe: ES3DV3 - SN3250; ConvF(7.29, 7.29, 7.29); Calibrated: 3/13/2018;
- Sensor-Surface: 3mm (Mechanical Surface Detection)
- Electronics: DAE4 Sn874; Calibrated: 8/21/2017
- Phantom: ELI 4.0; Type: QD OVA 001 BB; Serial: 1057
- DASY52 52.10.0(1446); SEMCAD X 14.6.10(7417)

Configuration Body for IC-F1100DT/Body Back, P=5W, d=0mm/Zoom Scan (7x7x7) (7x8x7)/Cube 0: Measurement grid: dx=5mm, dy=5mm, dz=5mm
Reference Value = 15.30 V/m; Power Drift = -0.10 dB
Peak SAR (extrapolated) = 0.333 W/kg
SAR(1 g) = 0.224 W/kg; SAR(10 g) = 0.162 W/kg (SAR corrected for target medium)
Maximum value of SAR (measured) = 0.253 W/kg

Configuration Body for IC-F1100DT/Body Back, P=5W, d=0mm/Area Scan (61x111x1):
Interpolated grid: dx=1.500 mm, dy=1.500 mm
Maximum value of SAR (interpolated) = 0.254 W/kg

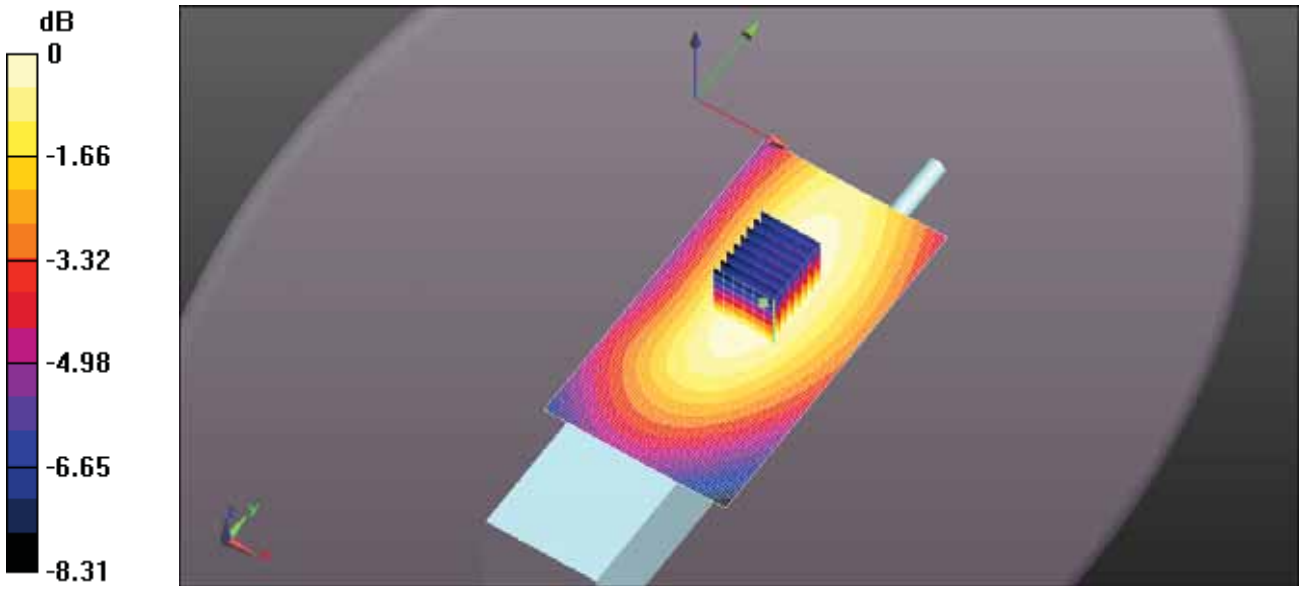

0 dB = 0.253 W/kg = -5.97 dBW/kg

Test Laboratory: Ultratech Group of Labs

FILE NAME: ICOM-489Q BODY FA-SC61VC 157MM 161.3MHZ.DA52:0

DUT: IC-F1100DT; Type: VHF Receiver; Serial: 32000201-0

Communication System: UID 10000, CW; Frequency: 161.3 MHz; Duty Cycle: 1:1
Medium parameters used: f = 162 MHz; σ = 0.843 S/m; ε_r = 64.096; ρ = 1000 kg/m^3 ; Phantom section: Flat Section ; Measurement Standard: DASY5 (IEEE/IEC/ANSI C63.19-2011)

DASY Configuration:

- Probe: ES3DV3 - SN3250; ConvF(7.29, 7.29, 7.29); Calibrated: 3/13/2018;
- Sensor-Surface: 3mm (Mechanical Surface Detection)
- Electronics: DAE4 Sn874; Calibrated: 8/21/2017
- Phantom: ELI 4.0; Type: QD OVA 001 BB; Serial: 1057
- DASY52 52.10.0(1446); SEMCAD X 14.6.10(7417)

Configuration Body for IC-F1100DT/Body Back, P=5W, d=0mm/Zoom Scan (7x7x7) (7x8x7)/Cube 0: Measurement grid: dx=5mm, dy=5mm, dz=5mm
Reference Value = 25.82 V/m; Power Drift = 0.18 dB
Peak SAR (extrapolated) = 0.941 W/kg
SAR(1 g) = 0.543 W/kg; SAR(10 g) = 0.378 W/kg (SAR corrected for target medium)
Maximum value of SAR (measured) = 0.626 W/kg

Configuration Body for IC-F1100DT/Body Back, P=5W, d=0mm/Area Scan (61x111x1):
Interpolated grid: dx=1.500 mm, dy=1.500 mm
Maximum value of SAR (interpolated) = 0.628 W/kg

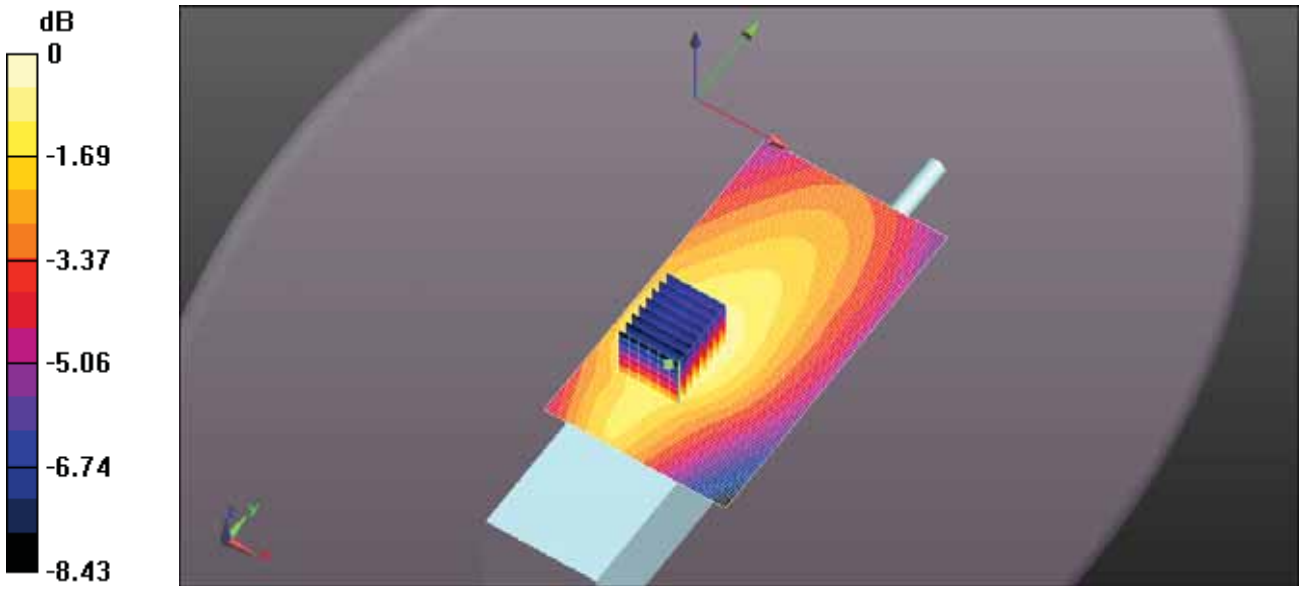

0 dB = 0.626 W/kg = -2.04 dBW/kg

Test Laboratory: Ultratech Group of Labs

FILE NAME: ICOM-489Q BODY FA-SC61VC 157MM 167.7MHZ.DA52:0

DUT: IC-F1100DT; Type: VHF Receiver; Serial: 32000201-0

Communication System: UID 10000, CW; Frequency: 167.7 MHz; Duty Cycle: 1:1
Medium parameters used: f = 168 MHz; σ = 0.845 S/m; ε_r = 64.002; ρ = 1000 kg/m^3 ; Phantom section: Flat Section ; Measurement Standard: DASY5 (IEEE/IEC/ANSI C63.19-2011)

DASY Configuration:

- Probe: ES3DV3 - SN3250; ConvF(7.29, 7.29, 7.29); Calibrated: 3/13/2018;
- Sensor-Surface: 3mm (Mechanical Surface Detection)
- Electronics: DAE4 Sn874; Calibrated: 8/21/2017
- Phantom: ELI 4.0; Type: QD OVA 001 BB; Serial: 1057
- DASY52 52.10.0(1446); SEMCAD X 14.6.10(7417)

Configuration Body for IC-F1100DT/Body Back, P=5W, d=0mm/Zoom Scan (7x7x7) (7x7x7)/Cube 0: Measurement grid: dx=5mm, dy=5mm, dz=5mm
Reference Value = 9.026 V/m; Power Drift = 0.86 dB
Peak SAR (extrapolated) = 0.127 W/kg
SAR(1 g) = 0.070 W/kg; SAR(10 g) = 0.046 W/kg (SAR corrected for target medium)
Maximum value of SAR (measured) = 0.0819 W/kg

Configuration Body for IC-F1100DT/Body Back, P=5W, d=0mm/Area Scan (61x111x1):
Interpolated grid: dx=1.500 mm, dy=1.500 mm
Maximum value of SAR (interpolated) = 0.0696 W/kg

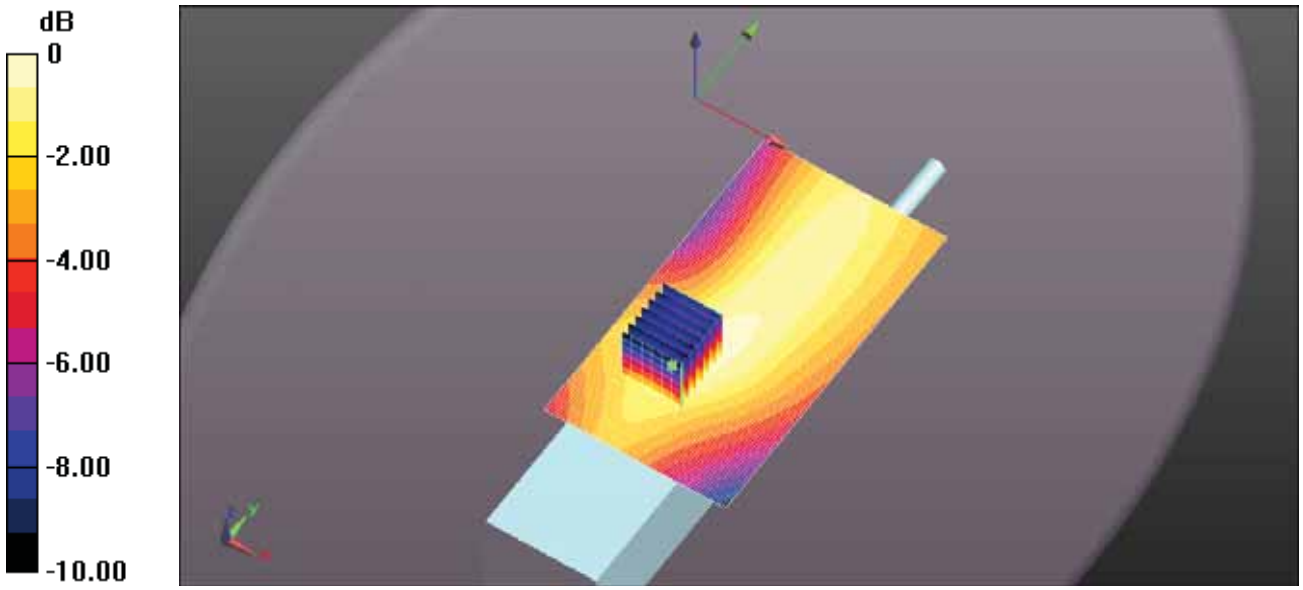

0 dB = 0.0819 W/kg = -10.87 dBW/kg

Test Laboratory: Ultratech Group of Labs

FILE NAME: ICOM-489Q BODY FA-SC61VC 157MM 174MHZ.DA52:0

DUT: IC-F1100DT; Type: VHF Receiver; Serial: 32000201-0

Communication System: UID 10000, CW; Frequency: 174 MHz; Duty Cycle: 1:1
Medium parameters used: f = 174 MHz; σ = 0.85 S/m; ε_r = 63.898; ρ = 1000 kg/m^3 ; Phantom section: Flat Section ; Measurement Standard: DASY5 (IEEE/IEC/ANSI C63.19-2011)

DASY Configuration:

- Probe: ES3DV3 - SN3250; ConvF(7.29, 7.29, 7.29); Calibrated: 3/13/2018;
- Sensor-Surface: 3mm (Mechanical Surface Detection)
- Electronics: DAE4 Sn874; Calibrated: 8/21/2017
- Phantom: ELI 4.0; Type: QD OVA 001 BB; Serial: 1057
- DASY52 52.10.0(1446); SEMCAD X 14.6.10(7417)

Configuration Body for IC-F1100DT/Body Back, P=5W, d=0mm/Zoom Scan (7x7x7) (8x13x7)/Cube 0: Measurement grid: dx=5mm, dy=5mm, dz=5mm
Reference Value = 20.15 V/m; Power Drift = 0.56 dB
Peak SAR (extrapolated) = 0.569 W/kg
SAR(1 g) = 0.335 W/kg; SAR(10 g) = 0.245 W/kg (SAR corrected for target medium)
Maximum value of SAR (measured) = 0.384 W/kg

Configuration Body for IC-F1100DT/Body Back, P=5W, d=0mm/Area Scan (61x111x1):
Interpolated grid: dx=1.500 mm, dy=1.500 mm
Maximum value of SAR (interpolated) = 0.374 W/kg

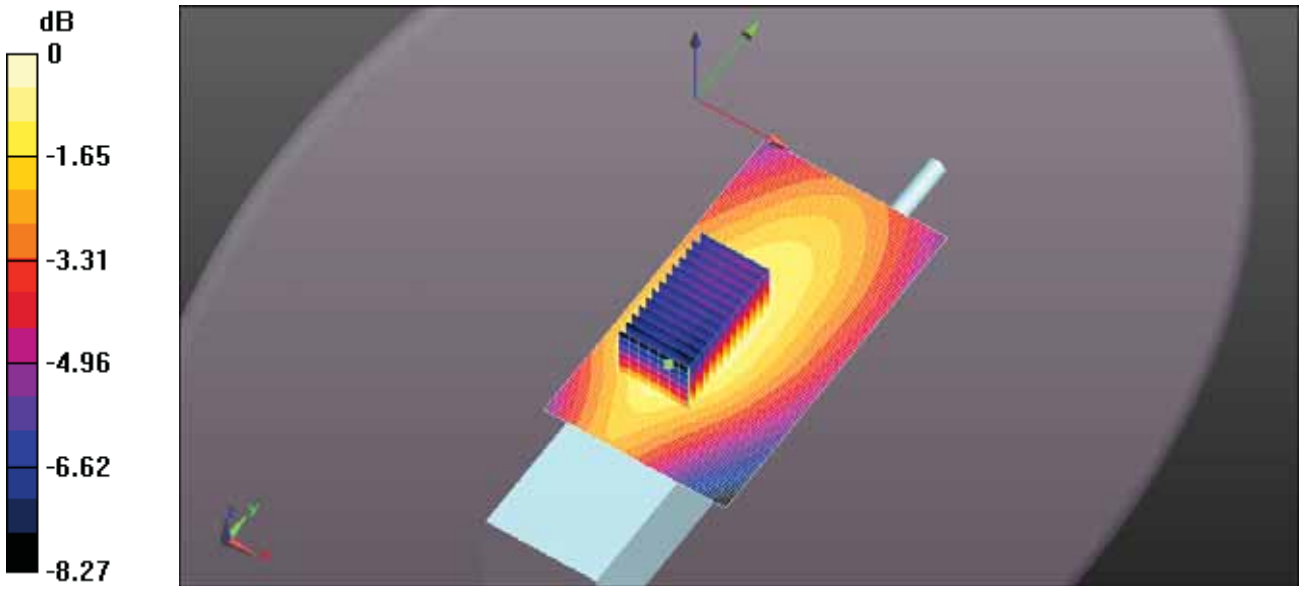

0 dB = 0.384 W/kg = -4.15 dBW/kg

Test Laboratory: Ultratech Group of Labs

FILE NAME: ICOM-489Q BODY FA-SC61VC 151MM 136MHZ.DA52:0

DUT: IC-F1100DT; Type: VHF Receiver; Serial: 32000201-0

Communication System: UID 10000, CW; Frequency: 136 MHz; Duty Cycle: 1:1
Medium parameters used: f = 136 MHz; σ = 0.835 S/m; ε_r = 63.621; ρ = 1000 kg/m^3 ; Phantom section: Flat Section ; Measurement Standard: DASY5 (IEEE/IEC/ANSI C63.19-2011)

DASY Configuration:

- Probe: ES3DV3 - SN3250; ConvF(7.29, 7.29, 7.29); Calibrated: 3/13/2018;
- Sensor-Surface: 3mm (Mechanical Surface Detection)
- Electronics: DAE4 Sn874; Calibrated: 8/21/2017
- Phantom: ELI 4.0; Type: QD OVA 001 BB; Serial: 1057
- DASY52 52.10.0(1446); SEMCAD X 14.6.10(7417)

Configuration Body for IC-F1100DT/Body Back, P=5W, d=0mm/Zoom Scan (7x7x7) (7x7x7)/Cube 0: Measurement grid: dx=5mm, dy=5mm, dz=5mm
Reference Value = 25.19 V/m; Power Drift = 0.33 dB
Peak SAR (extrapolated) = 0.752 W/kg
SAR(1 g) = 0.516 W/kg; SAR(10 g) = 0.383 W/kg (SAR corrected for target medium)
Maximum value of SAR (measured) = 0.579 W/kg

Configuration Body for IC-F1100DT/Body Back, P=5W, d=0mm/Area Scan (61x111x1):
Interpolated grid: dx=1.500 mm, dy=1.500 mm
Maximum value of SAR (interpolated) = 0.517 W/kg

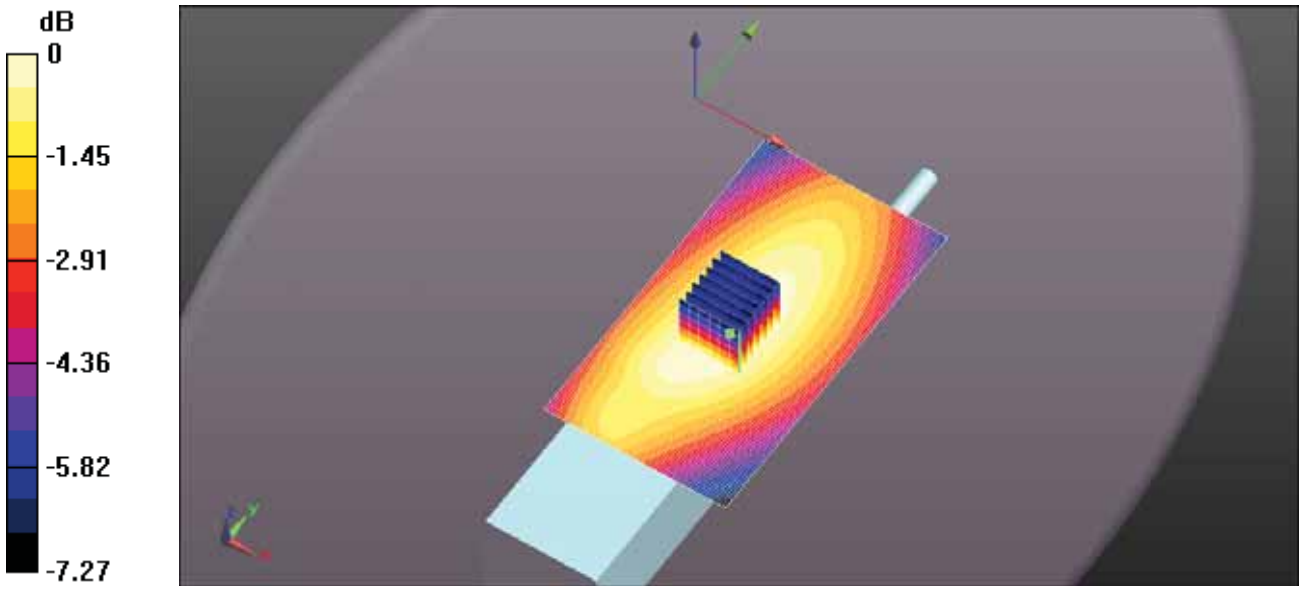

0 dB = 0.579 W/kg = -2.38 dBW/kg

Test Laboratory: Ultratech Group of Labs

FILE NAME: ICOM-489Q BODY FA-SC61VC 151MM 142.3MHZ.DA52:0

DUT: IC-F1100DT; Type: VHF Receiver; Serial: 32000201-0

Communication System: UID 10000, CW; Frequency: 142.3 MHz; Duty Cycle: 1:1
Medium parameters used (interpolated): f = 142.3 MHz; σ = 0.836 S/m; ε_r = 63.771; ρ = 1000 kg/m^3 ;
Phantom section: Flat Section ; Measurement Standard: DASY5 (IEEE/IEC/ANSI C63.19-2011)

DASY Configuration:

- Probe: ES3DV3 - SN3250; ConvF(7.29, 7.29, 7.29); Calibrated: 3/13/2018;
- Sensor-Surface: 3mm (Mechanical Surface Detection)
- Electronics: DAE4 Sn874; Calibrated: 8/21/2017
- Phantom: ELI 4.0; Type: QD OVA 001 BB; Serial: 1057
- DASY52 52.10.0(1446); SEMCAD X 14.6.10(7417)

Configuration Body for IC-F1100DT/Body Back, P=5W, d=0mm/Zoom Scan (7x7x7) (7x7x7)/Cube 0: Measurement grid: dx=5mm, dy=5mm, dz=5mm
Reference Value = 28.87 V/m; Power Drift = -0.10 dB
Peak SAR (extrapolated) = 0.981 W/kg
SAR(1 g) = 0.672 W/kg; SAR(10 g) = 0.497 W/kg (SAR corrected for target medium)
Maximum value of SAR (measured) = 0.753 W/kg

Configuration Body for IC-F1100DT/Body Back, P=5W, d=0mm/Area Scan (61x111x1):
Interpolated grid: dx=1.500 mm, dy=1.500 mm
Maximum value of SAR (interpolated) = 0.765 W/kg

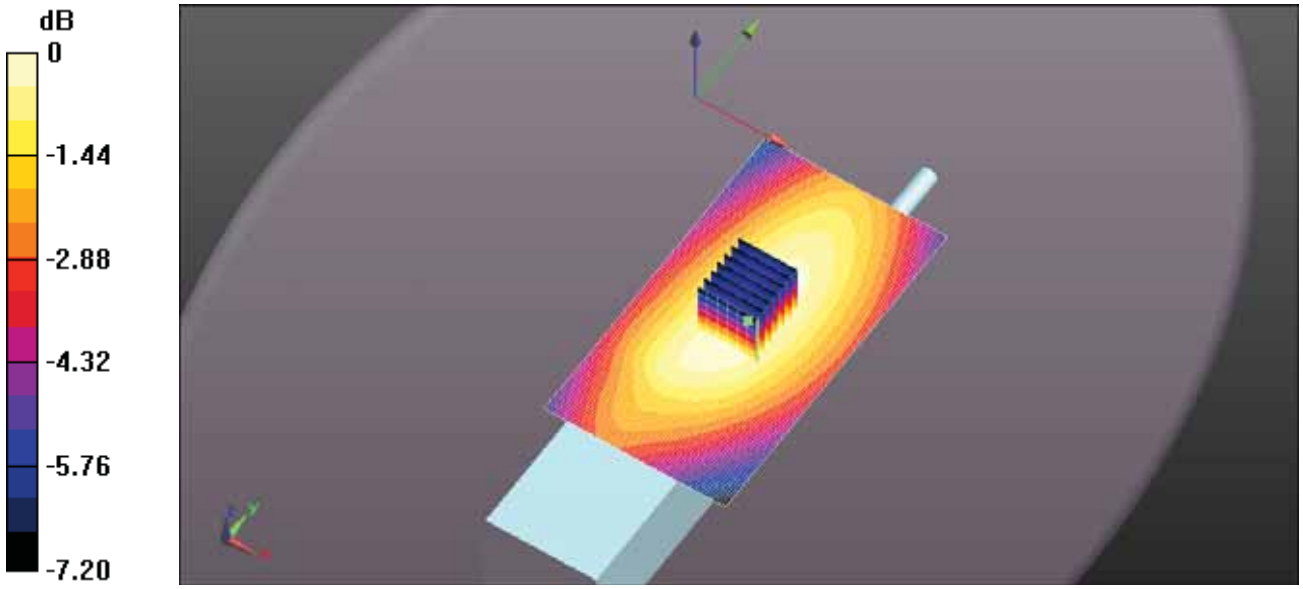

0 dB = 0.753 W/kg = -1.23 dBW/kg

Test Laboratory: Ultratech Group of Labs

FILE NAME: ICOM-489Q BODY FA-SC61VC 151MM 148.7MHZ.DA52:0

DUT: IC-F1100DT; Type: VHF Receiver; Serial: 32000201-0

Communication System: UID 10000, CW; Frequency: 148.7 MHz; Duty Cycle: 1:1
Medium parameters used (interpolated): f = 148.7 MHz; σ = 0.837 S/m; ε_r = 63.661; ρ = 1000 kg/m^3 ;
Phantom section: Flat Section ; Measurement Standard: DASY5 (IEEE/IEC/ANSI C63.19-2011)

DASY Configuration:

- Probe: ES3DV3 - SN3250; ConvF(7.29, 7.29, 7.29); Calibrated: 3/13/2018;
- Sensor-Surface: 3mm (Mechanical Surface Detection)
- Electronics: DAE4 Sn874; Calibrated: 8/21/2017
- Phantom: ELI 4.0; Type: QD OVA 001 BB; Serial: 1057
- DASY52 52.10.0(1446); SEMCAD X 14.6.10(7417)

Configuration Body for IC-F1100DT/Body Back, P=5W, d=0mm/Zoom Scan (7x7x7) (7x7x7)/Cube 0: Measurement grid: dx=5mm, dy=5mm, dz=5mm
Reference Value = 36.11 V/m; Power Drift = -0.06 dB
Peak SAR (extrapolated) = 1.60 W/kg
SAR(1 g) = 1.08 W/kg; SAR(10 g) = 0.792 W/kg (SAR corrected for target medium)
Maximum value of SAR (measured) = 1.22 W/kg

Configuration Body for IC-F1100DT/Body Back, P=5W, d=0mm/Area Scan (61x111x1):
Interpolated grid: dx=1.500 mm, dy=1.500 mm
Maximum value of SAR (interpolated) = 1.23 W/kg

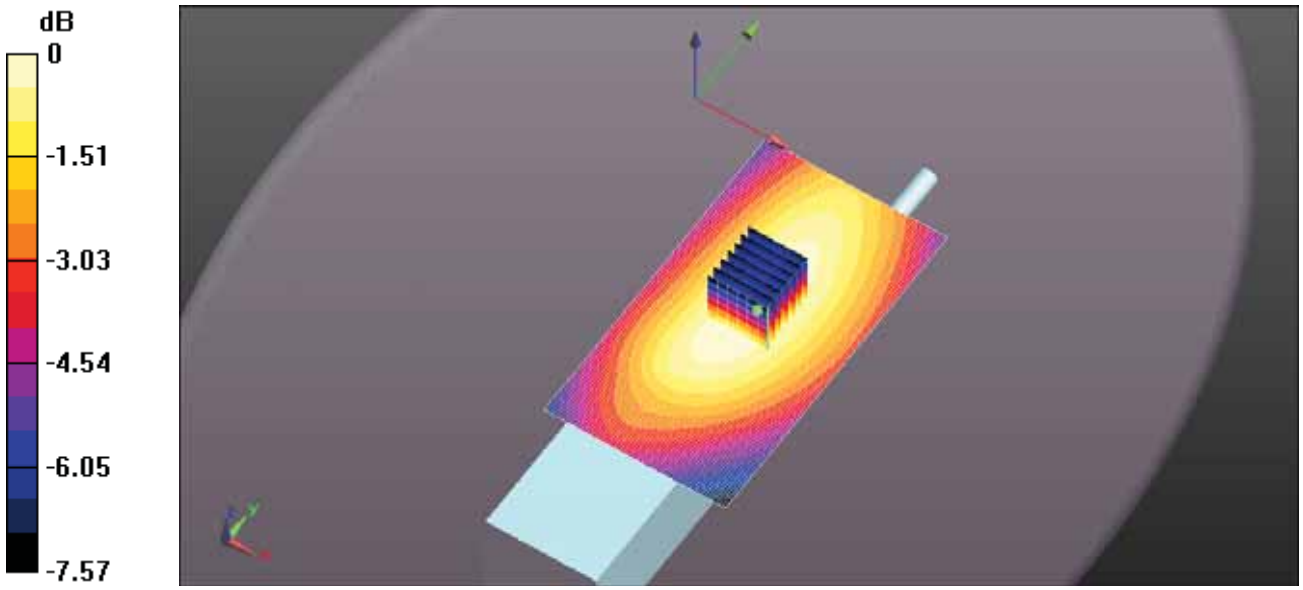

0 dB = 1.22 W/kg = 0.85 dBW/kg

Test Laboratory: Ultratech Group of Labs

FILE NAME: ICOM-489Q BODY FA-SC61VC 151MM 155MHZ.DA52:0

DUT: IC-F1100DT; Type: VHF Receiver; Serial: 32000201-0

Communication System: UID 10000, CW; Frequency: 155 MHz; Duty Cycle: 1:1
Medium parameters used (interpolated): f = 155 MHz; σ = 0.841 S/m; ε_r = 64.042; ρ = 1000 kg/m^3 ;
Phantom section: Flat Section ; Measurement Standard: DASY5 (IEEE/IEC/ANSI C63.19-2011)

DASY Configuration:

- Probe: ES3DV3 - SN3250; ConvF(7.29, 7.29, 7.29); Calibrated: 3/13/2018;
- Sensor-Surface: 3mm (Mechanical Surface Detection)
- Electronics: DAE4 Sn874; Calibrated: 8/21/2017
- Phantom: ELI 4.0; Type: QD OVA 001 BB; Serial: 1057
- DASY52 52.10.0(1446); SEMCAD X 14.6.10(7417)

Configuration Body for IC-F1100DT/Body Back, P=5W, d=0mm/Zoom Scan (7x7x7) (7x7x7)/Cube 0: Measurement grid: dx=5mm, dy=5mm, dz=5mm
Reference Value = 28.44 V/m; Power Drift = -0.16 dB
Peak SAR (extrapolated) = 1.12 W/kg
SAR(1 g) = 0.739 W/kg; SAR(10 g) = 0.534 W/kg (SAR corrected for target medium)
Maximum value of SAR (measured) = 0.839 W/kg

Configuration Body for IC-F1100DT/Body Back, P=5W, d=0mm/Area Scan (61x111x1):
Interpolated grid: dx=1.500 mm, dy=1.500 mm
Maximum value of SAR (interpolated) = 0.807 W/kg

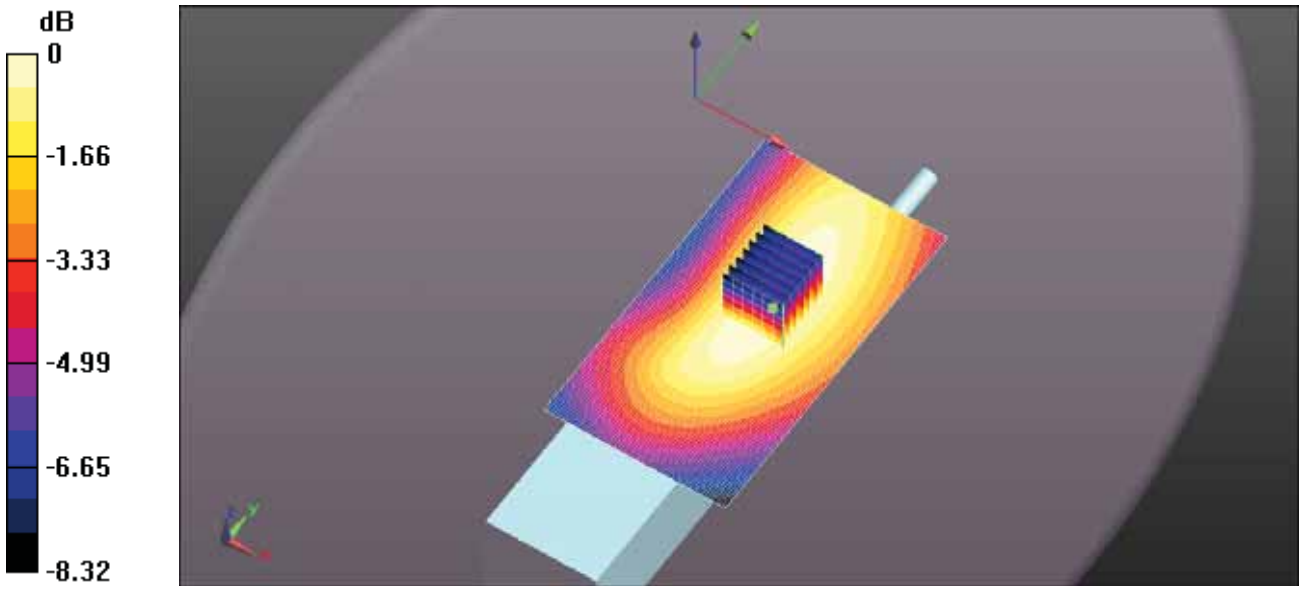

0 dB = 0.839 W/kg = -0.76 dBW/kg

Test Laboratory: Ultratech Group of Labs

FILE NAME: ICOM-489Q BODY FA-SC61VC 151MM 161.3MHZ.DA52:0

DUT: IC-F1100DT; Type: VHF Receiver; Serial: 32000201-0

Communication System: UID 10000, CW; Frequency: 161.3 MHz; Duty Cycle: 1:1
Medium parameters used: f = 162 MHz; σ = 0.843 S/m; ε_r = 64.096; ρ = 1000 kg/m^3 ; Phantom section: Flat Section ; Measurement Standard: DASY5 (IEEE/IEC/ANSI C63.19-2011)

DASY Configuration:

- Probe: ES3DV3 - SN3250; ConvF(7.29, 7.29, 7.29); Calibrated: 3/13/2018;
- Sensor-Surface: 3mm (Mechanical Surface Detection)
- Electronics: DAE4 Sn874; Calibrated: 8/21/2017
- Phantom: ELI 4.0; Type: QD OVA 001 BB; Serial: 1057
- DASY52 52.10.0(1446); SEMCAD X 14.6.10(7417)

Configuration Body for IC-F1100DT/Body Back, P=5W, d=0mm/Zoom Scan (7x7x7) (7x7x7)/Cube 0: Measurement grid: dx=5mm, dy=5mm, dz=5mm
Reference Value = 19.43 V/m; Power Drift = -0.10 dB
Peak SAR (extrapolated) = 0.552 W/kg
SAR(1 g) = 0.364 W/kg; SAR(10 g) = 0.261 W/kg (SAR corrected for target medium)
Maximum value of SAR (measured) = 0.413 W/kg

Configuration Body for IC-F1100DT/Body Back, P=5W, d=0mm/Area Scan (61x111x1):
Interpolated grid: dx=1.500 mm, dy=1.500 mm
Maximum value of SAR (interpolated) = 0.414 W/kg

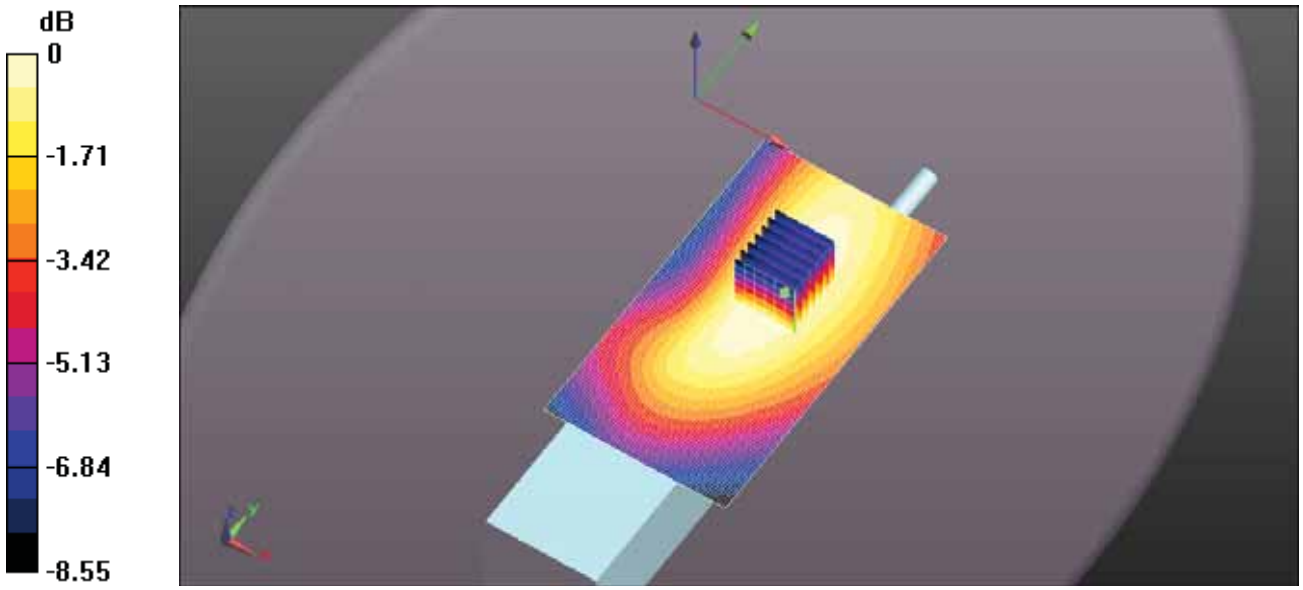

0 dB = 0.413 W/kg = -3.84 dBW/kg

Test Laboratory: Ultratech Group of Labs

FILE NAME: ICOM-489Q BODY FA-SC61VC 151MM 167.7MHZ.DA52:0

DUT: IC-F1100DT; Type: VHF Receiver; Serial: 32000201-0

Communication System: UID 10000, CW; Frequency: 167.7 MHz; Duty Cycle: 1:1
Medium parameters used: f = 168 MHz; σ = 0.845 S/m; ε_r = 64.002; ρ = 1000 kg/m^3 ; Phantom section: Flat Section ; Measurement Standard: DASY5 (IEEE/IEC/ANSI C63.19-2011)

DASY Configuration:

- Probe: ES3DV3 - SN3250; ConvF(7.29, 7.29, 7.29); Calibrated: 3/13/2018;
- Sensor-Surface: 3mm (Mechanical Surface Detection)
- Electronics: DAE4 Sn874; Calibrated: 8/21/2017
- Phantom: ELI 4.0; Type: QD OVA 001 BB; Serial: 1057
- DASY52 52.10.0(1446); SEMCAD X 14.6.10(7417)

Configuration Body for IC-F1100DT/Body Back, P=5W, d=0mm/Zoom Scan (7x7x7) (8x16x7)/Cube 0: Measurement grid: dx=5mm, dy=5mm, dz=5mm
Reference Value = 37.93 V/m; Power Drift = 1.91 dB
Peak SAR (extrapolated) = 2.05 W/kg
SAR(1 g) = 1.43 W/kg; SAR(10 g) = 1.07 W/kg (SAR corrected for target medium)
Maximum value of SAR (measured) = 1.60 W/kg

Configuration Body for IC-F1100DT/Body Back, P=5W, d=0mm/Area Scan (61x111x1):
Interpolated grid: dx=1.500 mm, dy=1.500 mm
Maximum value of SAR (interpolated) = 1.19 W/kg

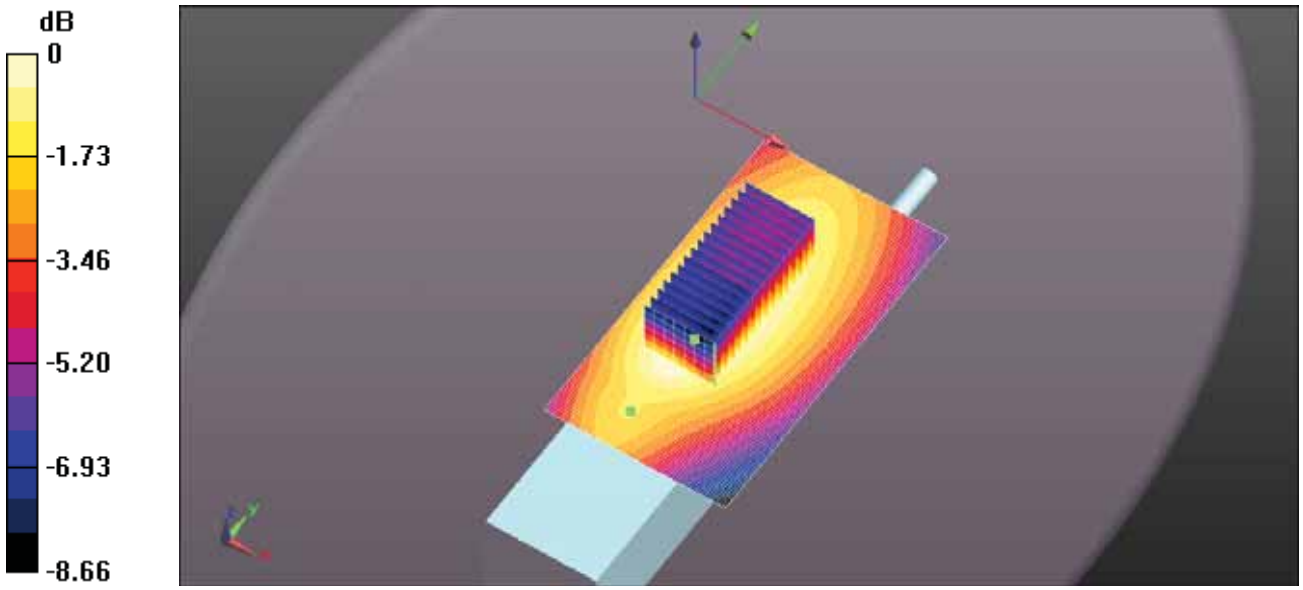

0 dB = 1.60 W/kg = 2.03 dBW/kg

Test Laboratory: Ultratech Group of Labs

FILE NAME: ICOM-489Q BODY FA-SC61VC 151MM 174MHZ.DA52:0

DUT: IC-F1100DT; Type: VHF Receiver; Serial: 32000201-0

Communication System: UID 10000, CW; Frequency: 174 MHz; Duty Cycle: 1:1
Medium parameters used: f = 174 MHz; σ = 0.85 S/m; ε_r = 63.898; ρ = 1000 kg/m^3 ; Phantom section: Flat Section ; Measurement Standard: DASY5 (IEEE/IEC/ANSI C63.19-2011)

DASY Configuration:

- Probe: ES3DV3 - SN3250; ConvF(7.29, 7.29, 7.29); Calibrated: 3/13/2018;
- Sensor-Surface: 3mm (Mechanical Surface Detection)
- Electronics: DAE4 Sn874; Calibrated: 8/21/2017
- Phantom: ELI 4.0; Type: QD OVA 001 BB; Serial: 1057
- DASY52 52.10.0(1446); SEMCAD X 14.6.10(7417)

Configuration Body for IC-F1100DT/Body Back, P=5W, d=0mm/Zoom Scan (7x7x7) (8x13x7)/Cube 0: Measurement grid: dx=5mm, dy=5mm, dz=5mm
Reference Value = 26.26 V/m; Power Drift = 0.82 dB
Peak SAR (extrapolated) = 0.975 W/kg
SAR(1 g) = 0.589 W/kg; SAR(10 g) = 0.436 W/kg (SAR corrected for target medium)
Maximum value of SAR (measured) = 0.679 W/kg

Configuration Body for IC-F1100DT/Body Back, P=5W, d=0mm/Area Scan (61x111x1):
Interpolated grid: dx=1.500 mm, dy=1.500 mm
Maximum value of SAR (interpolated) = 0.600 W/kg

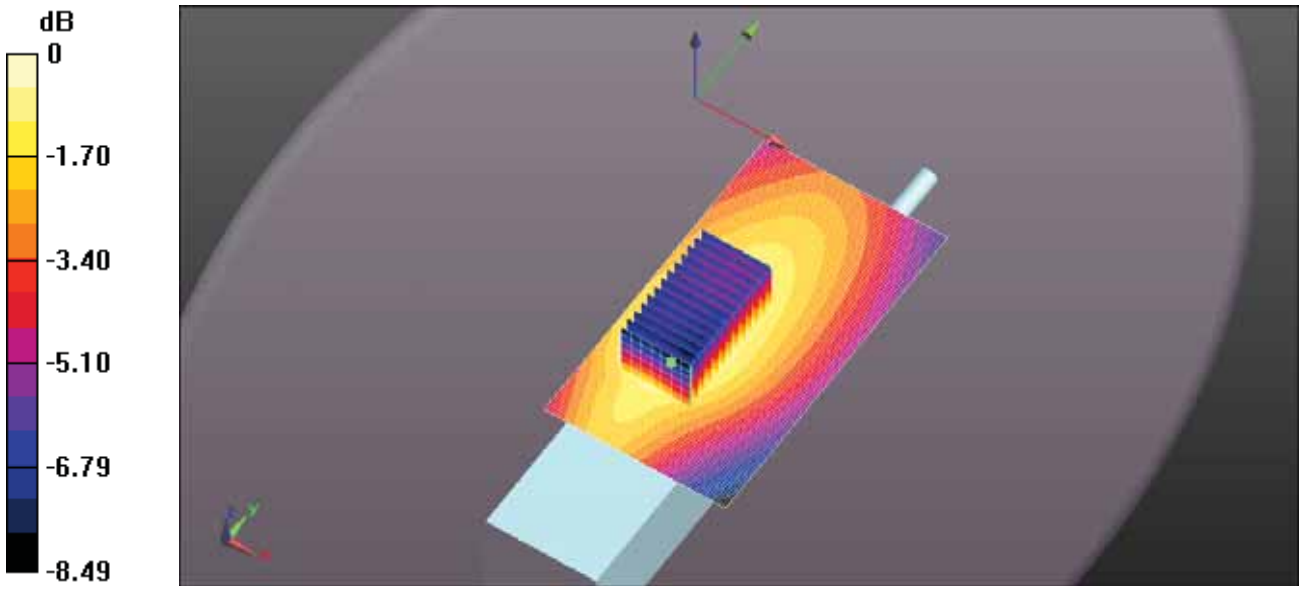

0 dB = 0.679 W/kg = -1.68 dBW/kg

Test Laboratory: Ultratech Group of Labs

FILE NAME: ICOM-489Q BODY FA-SC61VC 146MM 136MHZ.DA52:0

DUT: IC-F1100DT; Type: VHF Receiver; Serial: 32000201-0

Communication System: UID 10000, CW; Frequency: 136 MHz; Duty Cycle: 1:1
Medium parameters used: f = 136 MHz; σ = 0.835 S/m; ε_r = 63.621; ρ = 1000 kg/m^3 ; Phantom section: Flat Section ; Measurement Standard: DASY5 (IEEE/IEC/ANSI C63.19-2011)

DASY Configuration:

- Probe: ES3DV3 - SN3250; ConvF(7.29, 7.29, 7.29); Calibrated: 3/13/2018;
- Sensor-Surface: 3mm (Mechanical Surface Detection)
- Electronics: DAE4 Sn874; Calibrated: 8/21/2017
- Phantom: ELI 4.0; Type: QD OVA 001 BB; Serial: 1057
- DASY52 52.10.0(1446); SEMCAD X 14.6.10(7417)

Configuration Body for IC-F1100DT/Body Back, P=5W, d=0mm/Zoom Scan (7x7x7) (7x7x7)/Cube 0: Measurement grid: dx=5mm, dy=5mm, dz=5mm
Reference Value = 23.95 V/m; Power Drift = 0.20 dB
Peak SAR (extrapolated) = 0.692 W/kg
SAR(1 g) = 0.473 W/kg; SAR(10 g) = 0.350 W/kg (SAR corrected for target medium)
Maximum value of SAR (measured) = 0.531 W/kg

Configuration Body for IC-F1100DT/Body Back, P=5W, d=0mm/Area Scan (61x111x1):
Interpolated grid: dx=1.500 mm, dy=1.500 mm
Maximum value of SAR (interpolated) = 0.488 W/kg

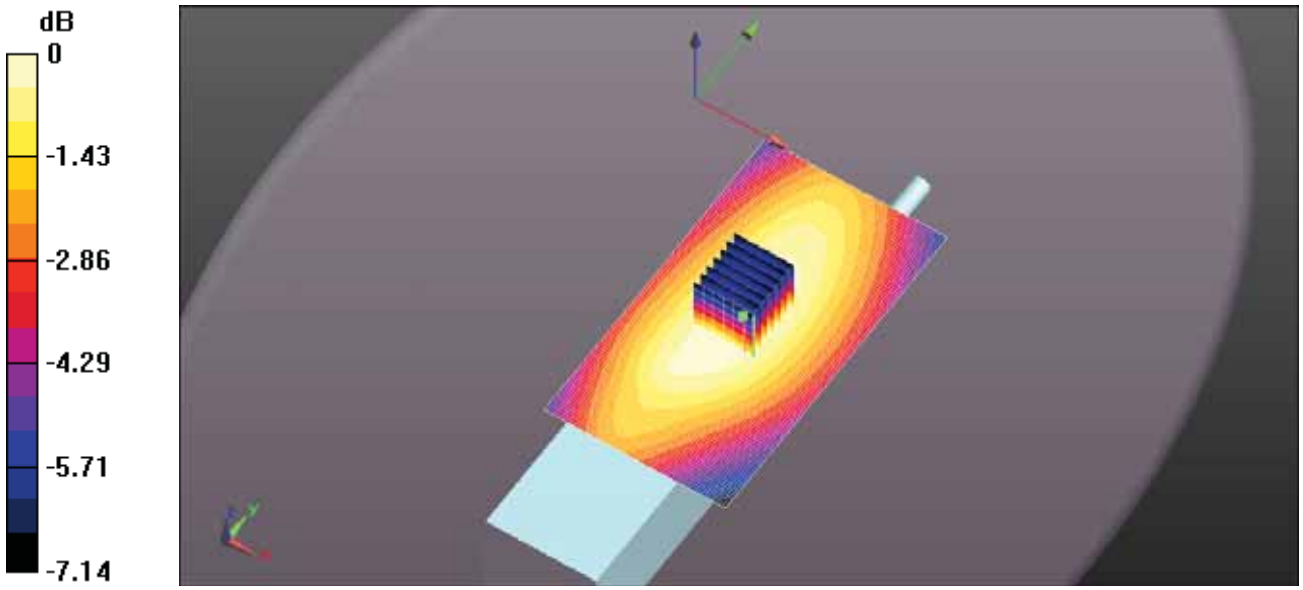

0 dB = 0.531 W/kg = -2.75 dBW/kg

Test Laboratory: Ultratech Group of Labs

FILE NAME: ICOM-489Q BODY FA-SC61VC 146MM 142.3MHZ.DA52:0

DUT: IC-F1100DT; Type: VHF Receiver; Serial: 32000201-0

Communication System: UID 10000, CW; Frequency: 142.3 MHz; Duty Cycle: 1:1
Medium parameters used (interpolated): f = 142.3 MHz; σ = 0.836 S/m; ε_r = 63.771; ρ = 1000 kg/m^3 ;
Phantom section: Flat Section ; Measurement Standard: DASY5 (IEEE/IEC/ANSI C63.19-2011)

DASY Configuration:

- Probe: ES3DV3 - SN3250; ConvF(7.29, 7.29, 7.29); Calibrated: 3/13/2018;
- Sensor-Surface: 3mm (Mechanical Surface Detection)
- Electronics: DAE4 Sn874; Calibrated: 8/21/2017
- Phantom: ELI 4.0; Type: QD OVA 001 BB; Serial: 1057
- DASY52 52.10.0(1446); SEMCAD X 14.6.10(7417)

Configuration Body for IC-F1100DT/Body Back, P=5W, d=0mm/Zoom Scan (7x7x7) (7x7x7)/Cube 0: Measurement grid: dx=5mm, dy=5mm, dz=5mm
Reference Value = 28.54 V/m; Power Drift = -0.17 dB
Peak SAR (extrapolated) = 0.980 W/kg
SAR(1 g) = 0.666 W/kg; SAR(10 g) = 0.491 W/kg (SAR corrected for target medium)
Maximum value of SAR (measured) = 0.749 W/kg

Configuration Body for IC-F1100DT/Body Back, P=5W, d=0mm/Area Scan (61x111x1):
Interpolated grid: dx=1.500 mm, dy=1.500 mm
Maximum value of SAR (interpolated) = 0.768 W/kg

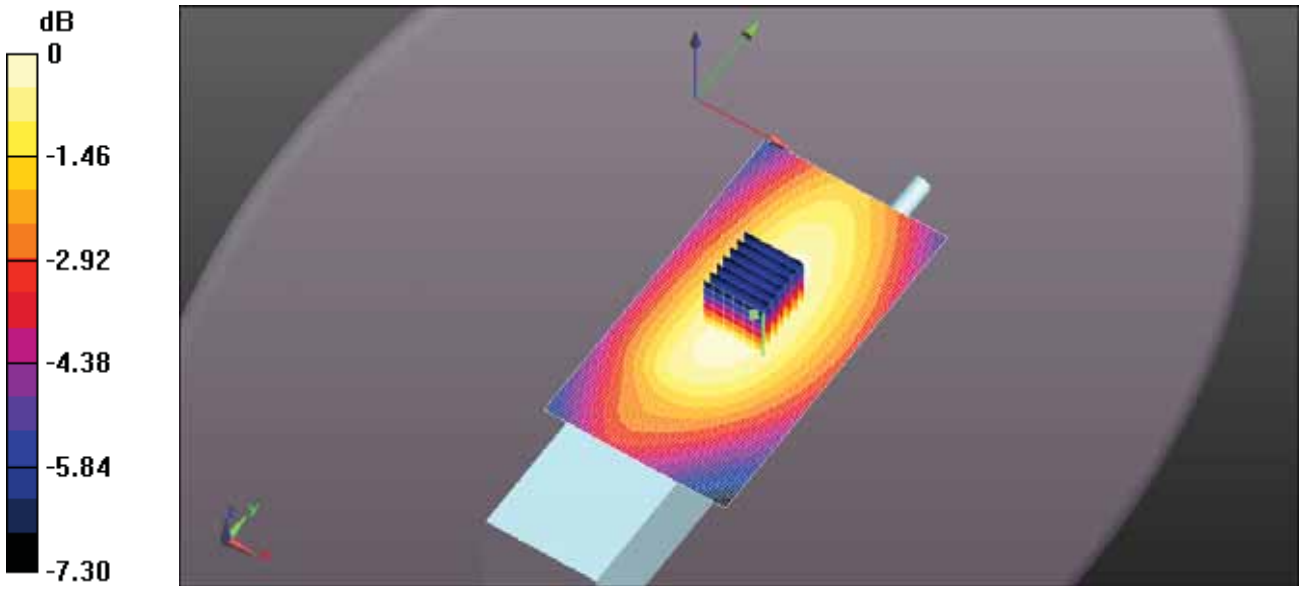

0 dB = 0.749 W/kg = -1.26 dBW/kg

Test Laboratory: Ultratech Group of Labs

FILE NAME: ICOM-489Q BODY FA-SC61VC 146MM 148.7MHZ.DA52:0

DUT: IC-F1100DT; Type: VHF Receiver; Serial: 32000201-0

Communication System: UID 10000, CW; Frequency: 148.7 MHz; Duty Cycle: 1:1
Medium parameters used (interpolated): f = 148.7 MHz; σ = 0.837 S/m; ε_r = 63.661; ρ = 1000 kg/m^3 ;
Phantom section: Flat Section ; Measurement Standard: DASY5 (IEEE/IEC/ANSI C63.19-2011)

DASY Configuration:

- Probe: ES3DV3 - SN3250; ConvF(7.29, 7.29, 7.29); Calibrated: 3/13/2018;
- Sensor-Surface: 3mm (Mechanical Surface Detection)
- Electronics: DAE4 Sn874; Calibrated: 8/21/2017
- Phantom: ELI 4.0; Type: QD OVA 001 BB; Serial: 1057
- DASY52 52.10.0(1446); SEMCAD X 14.6.10(7417)

Configuration Body for IC-F1100DT/Body Back, P=5W, d=0mm/Zoom Scan (7x7x7) (7x7x7)/Cube 0: Measurement grid: dx=5mm, dy=5mm, dz=5mm
Reference Value = 37.17 V/m; Power Drift = -0.02 dB
Peak SAR (extrapolated) = 1.71 W/kg
SAR(1 g) = 1.16 W/kg; SAR(10 g) = 0.852 W/kg (SAR corrected for target medium)
Maximum value of SAR (measured) = 1.30 W/kg

Configuration Body for IC-F1100DT/Body Back, P=5W, d=0mm/Area Scan (61x111x1):
Interpolated grid: dx=1.500 mm, dy=1.500 mm
Maximum value of SAR (interpolated) = 1.32 W/kg

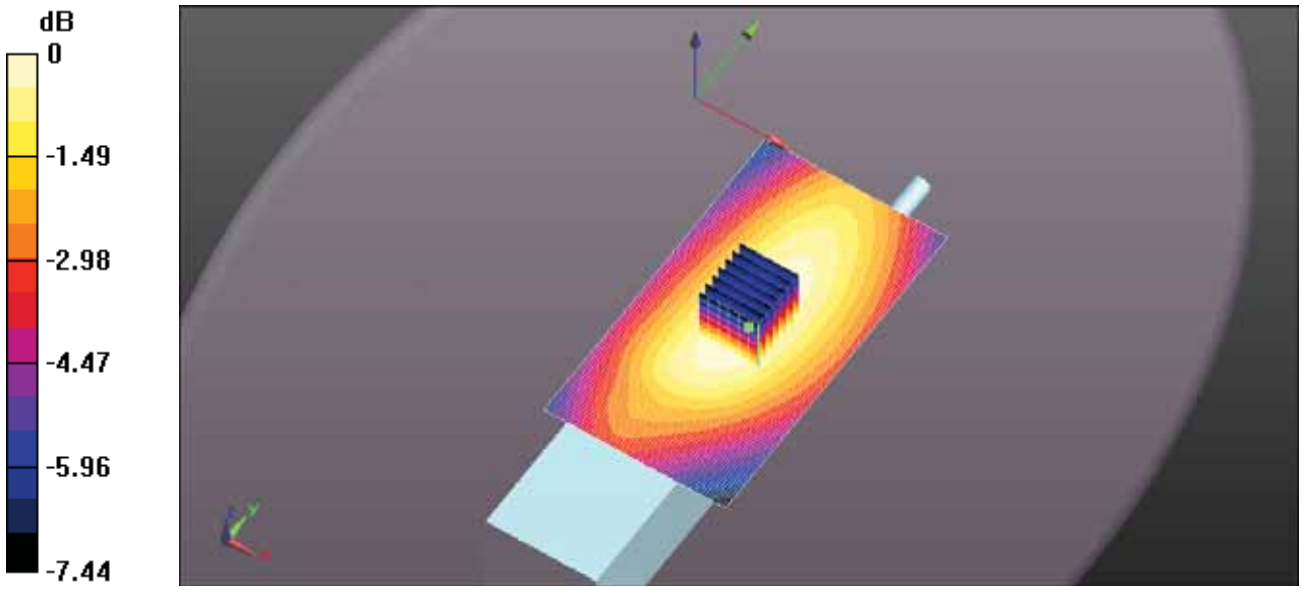

0 dB = 1.30 W/kg = 1.15 dBW/kg

Test Laboratory: Ultratech Group of Labs

FILE NAME: ICOM-489Q BODY FA-SC61VC 146MM 155MHZ.DA52:0

DUT: IC-F1100DT; Type: VHF Receiver; Serial: 32000201-0

Communication System: UID 10000, CW; Frequency: 155 MHz; Duty Cycle: 1:1
Medium parameters used (interpolated): f = 155 MHz; σ = 0.841 S/m; ε_r = 64.042; ρ = 1000 kg/m^3 ;
Phantom section: Flat Section ; Measurement Standard: DASY5 (IEEE/IEC/ANSI C63.19-2011)

DASY Configuration:

- Probe: ES3DV3 - SN3250; ConvF(7.29, 7.29, 7.29); Calibrated: 3/13/2018;
- Sensor-Surface: 3mm (Mechanical Surface Detection)
- Electronics: DAE4 Sn874; Calibrated: 8/21/2017
- Phantom: ELI 4.0; Type: QD OVA 001 BB; Serial: 1057
- DASY52 52.10.0(1446); SEMCAD X 14.6.10(7417)

Configuration Body for IC-F1100DT/Body Back, P=5W, d=0mm/Zoom Scan (7x7x7) (7x8x7)/Cube 0: Measurement grid: dx=5mm, dy=5mm, dz=5mm
Reference Value = 28.53 V/m; Power Drift = -0.16 dB
Peak SAR (extrapolated) = 1.17 W/kg
SAR(1 g) = 0.781 W/kg; SAR(10 g) = 0.567 W/kg (SAR corrected for target medium)
Maximum value of SAR (measured) = 0.885 W/kg

Configuration Body for IC-F1100DT/Body Back, P=5W, d=0mm/Area Scan (61x111x1):
Interpolated grid: dx=1.500 mm, dy=1.500 mm
Maximum value of SAR (interpolated) = 0.896 W/kg

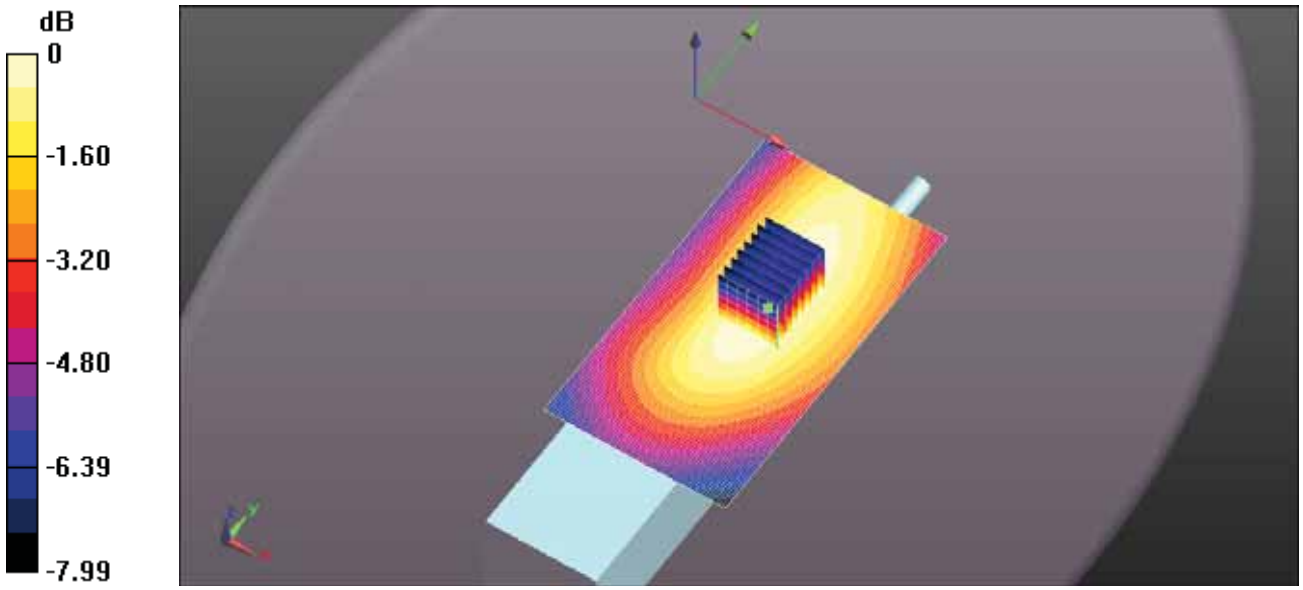

0 dB = 0.885 W/kg = -0.53 dBW/kg

Test Laboratory: Ultratech Group of Labs

FILE NAME: ICOM-489Q BODY FA-SC61VC 146MM 161.3MHZ.DA52:0

DUT: IC-F1100DT; Type: VHF Receiver; Serial: 32000201-0

Communication System: UID 10000, CW; Frequency: 161.3 MHz; Duty Cycle: 1:1
Medium parameters used: f = 162 MHz; σ = 0.843 S/m; ε_r = 64.096; ρ = 1000 kg/m^3 ; Phantom section: Flat Section ; Measurement Standard: DASY5 (IEEE/IEC/ANSI C63.19-2011)

DASY Configuration:

- Probe: ES3DV3 - SN3250; ConvF(7.29, 7.29, 7.29); Calibrated: 3/13/2018;
- Sensor-Surface: 3mm (Mechanical Surface Detection)
- Electronics: DAE4 Sn874; Calibrated: 8/21/2017
- Phantom: ELI 4.0; Type: QD OVA 001 BB; Serial: 1057
- DASY52 52.10.0(1446); SEMCAD X 14.6.10(7417)

Configuration Body for IC-F1100DT/Body Back, P=5W, d=0mm/Zoom Scan (7x7x7) (9x10x7)/Cube 0: Measurement grid: dx=5mm, dy=5mm, dz=5mm
Reference Value = 14.59 V/m; Power Drift = -0.22 dB
Peak SAR (extrapolated) = 0.283 W/kg
SAR(1 g) = 0.171 W/kg; SAR(10 g) = 0.119 W/kg (SAR corrected for target medium)
Maximum value of SAR (measured) = 0.195 W/kg

Configuration Body for IC-F1100DT/Body Back, P=5W, d=0mm/Area Scan (61x111x1):
Interpolated grid: dx=1.500 mm, dy=1.500 mm
Maximum value of SAR (interpolated) = 0.196 W/kg

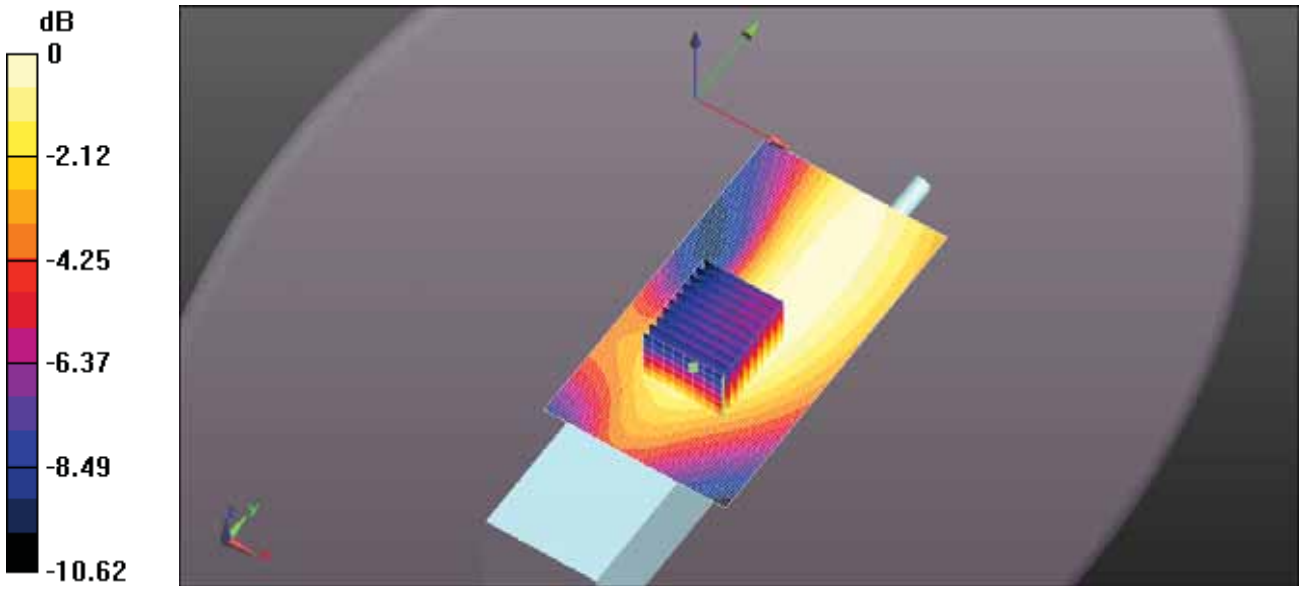

0 dB = 0.195 W/kg = -7.10 dBW/kg

Test Laboratory: Ultratech Group of Labs

FILE NAME: ICOM-489Q BODY FA-SC61VC 146MM 167.7MHZ.DA52:0

DUT: IC-F1100DT; Type: VHF Receiver; Serial: 32000201-0

Communication System: UID 10000, CW; Frequency: 167.7 MHz; Duty Cycle: 1:1
Medium parameters used: f = 168 MHz; σ = 0.845 S/m; ε_r = 64.002; ρ = 1000 kg/m^3 ; Phantom section: Flat Section ; Measurement Standard: DASY5 (IEEE/IEC/ANSI C63.19-2011)

DASY Configuration:

- Probe: ES3DV3 - SN3250; ConvF(7.29, 7.29, 7.29); Calibrated: 3/13/2018;
- Sensor-Surface: 3mm (Mechanical Surface Detection)
- Electronics: DAE4 Sn874; Calibrated: 8/21/2017
- Phantom: ELI 4.0; Type: QD OVA 001 BB; Serial: 1057
- DASY52 52.10.0(1446); SEMCAD X 14.6.10(7417)

Configuration Body for IC-F1100DT/Body Back, P=5W, d=0mm/Zoom Scan (7x7x7) (8x10x7)/Cube 0: Measurement grid: dx=5mm, dy=5mm, dz=5mm
Reference Value = 26.45 V/m; Power Drift = 0.19 dB
Peak SAR (extrapolated) = 0.875 W/kg
SAR(1 g) = 0.541 W/kg; SAR(10 g) = 0.398 W/kg (SAR corrected for target medium)
Maximum value of SAR (measured) = 0.614 W/kg

Configuration Body for IC-F1100DT/Body Back, P=5W, d=0mm/Area Scan (61x111x1):
Interpolated grid: dx=1.500 mm, dy=1.500 mm
Maximum value of SAR (interpolated) = 0.610 W/kg

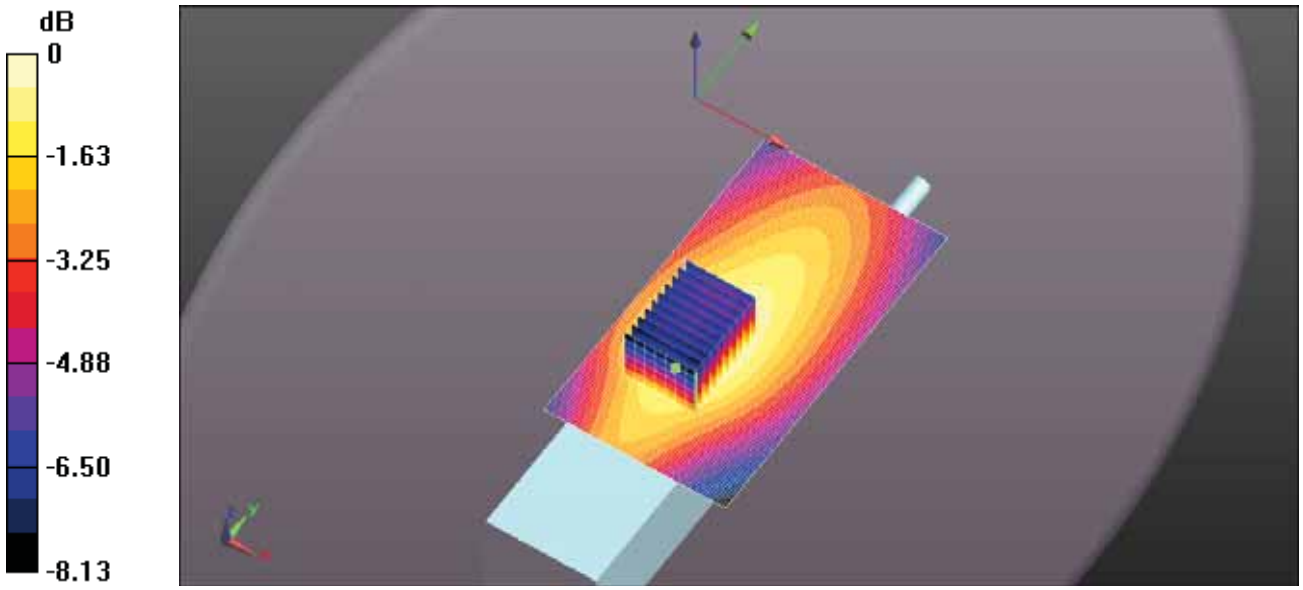

0 dB = 0.614 W/kg = -2.12 dBW/kg

Test Laboratory: Ultratech Group of Labs

FILE NAME: ICOM-489Q BODY FA-SC61VC 146MM 174MHZ.DA52:0

DUT: IC-F1100DT; Type: VHF Receiver; Serial: 32000201-0

Communication System: UID 10000, CW; Frequency: 174 MHz; Duty Cycle: 1:1
Medium parameters used: f = 174 MHz; σ = 0.85 S/m; ε_r = 63.898; ρ = 1000 kg/m^3 ; Phantom section: Flat Section ; Measurement Standard: DASY5 (IEEE/IEC/ANSI C63.19-2011)

DASY Configuration:

- Probe: ES3DV3 - SN3250; ConvF(7.29, 7.29, 7.29); Calibrated: 3/13/2018;
- Sensor-Surface: 3mm (Mechanical Surface Detection)
- Electronics: DAE4 Sn874; Calibrated: 8/21/2017
- Phantom: ELI 4.0; Type: QD OVA 001 BB; Serial: 1057
- DASY52 52.10.0(1446); SEMCAD X 14.6.10(7417)

Configuration Body for IC-F1100DT/Body Back, P=5W, d=0mm/Zoom Scan (7x7x7) (9x13x7)/Cube 0: Measurement grid: dx=5mm, dy=5mm, dz=5mm
Reference Value = 21.86 V/m; Power Drift = 1.08 dB
Peak SAR (extrapolated) = 0.665 W/kg
SAR(1 g) = 0.409 W/kg; SAR(10 g) = 0.309 W/kg (SAR corrected for target medium)
Maximum value of SAR (measured) = 0.455 W/kg

Configuration Body for IC-F1100DT/Body Back, P=5W, d=0mm/Area Scan (61x111x1):
Interpolated grid: dx=1.500 mm, dy=1.500 mm
Maximum value of SAR (interpolated) = 0.419 W/kg

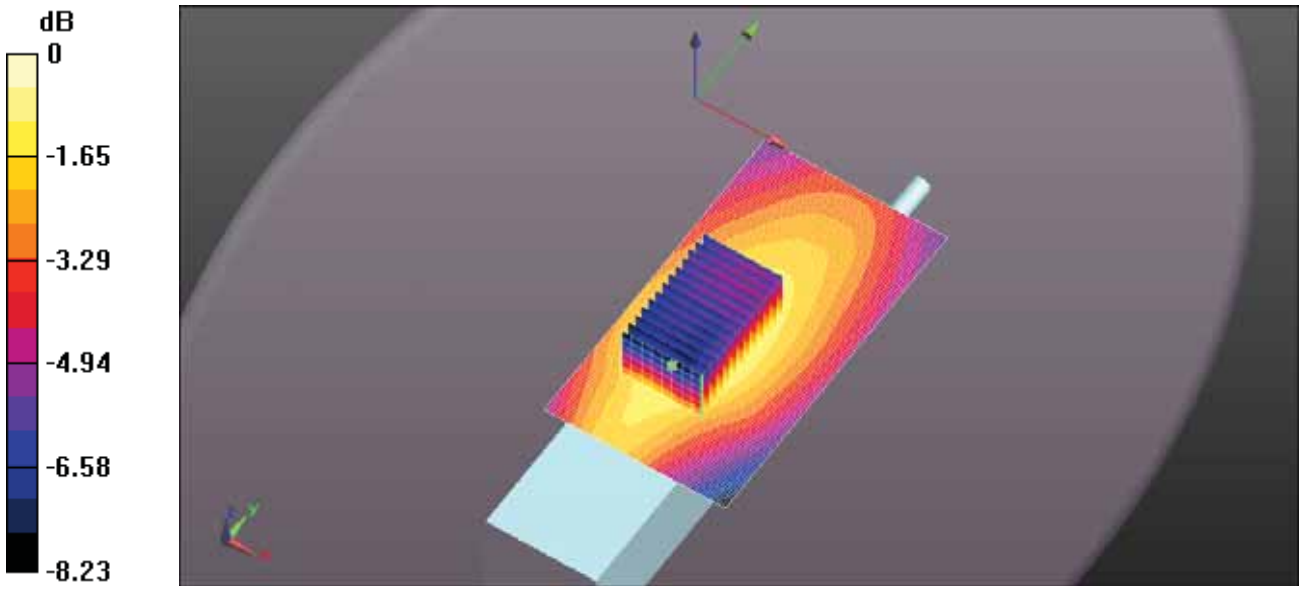

0 dB = 0.455 W/kg = -3.42 dBW/kg

Test Laboratory: Ultratech Group of Labs

FILE NAME: ICOM-489Q BODY FA-SC61VC 141MM 136MHZ.DA52:0

DUT: IC-F1100DT; Type: VHF Receiver; Serial: 32000201-0

Communication System: UID 10000, CW; Frequency: 136 MHz; Duty Cycle: 1:1
Medium parameters used: f = 136 MHz; σ = 0.835 S/m; ε_r = 63.621; ρ = 1000 kg/m^3 ; Phantom section: Flat Section ; Measurement Standard: DASY5 (IEEE/IEC/ANSI C63.19-2011)

DASY Configuration:

- Probe: ES3DV3 - SN3250; ConvF(7.29, 7.29, 7.29); Calibrated: 3/13/2018;
- Sensor-Surface: 3mm (Mechanical Surface Detection)
- Electronics: DAE4 Sn874; Calibrated: 8/21/2017
- Phantom: ELI 4.0; Type: QD OVA 001 BB; Serial: 1057
- DASY52 52.10.0(1446); SEMCAD X 14.6.10(7417)

Configuration Body for IC-F1100DT/Body Back, P=5W, d=0mm/Zoom Scan (7x7x7) (7x7x7)/Cube 0: Measurement grid: dx=5mm, dy=5mm, dz=5mm
Reference Value = 24.93 V/m; Power Drift = 0.26 dB
Peak SAR (extrapolated) = 0.760 W/kg
SAR(1 g) = 0.522 W/kg; SAR(10 g) = 0.388 W/kg (SAR corrected for target medium)
Maximum value of SAR (measured) = 0.584 W/kg

Configuration Body for IC-F1100DT/Body Back, P=5W, d=0mm/Area Scan (61x111x1):
Interpolated grid: dx=1.500 mm, dy=1.500 mm
Maximum value of SAR (interpolated) = 0.529 W/kg

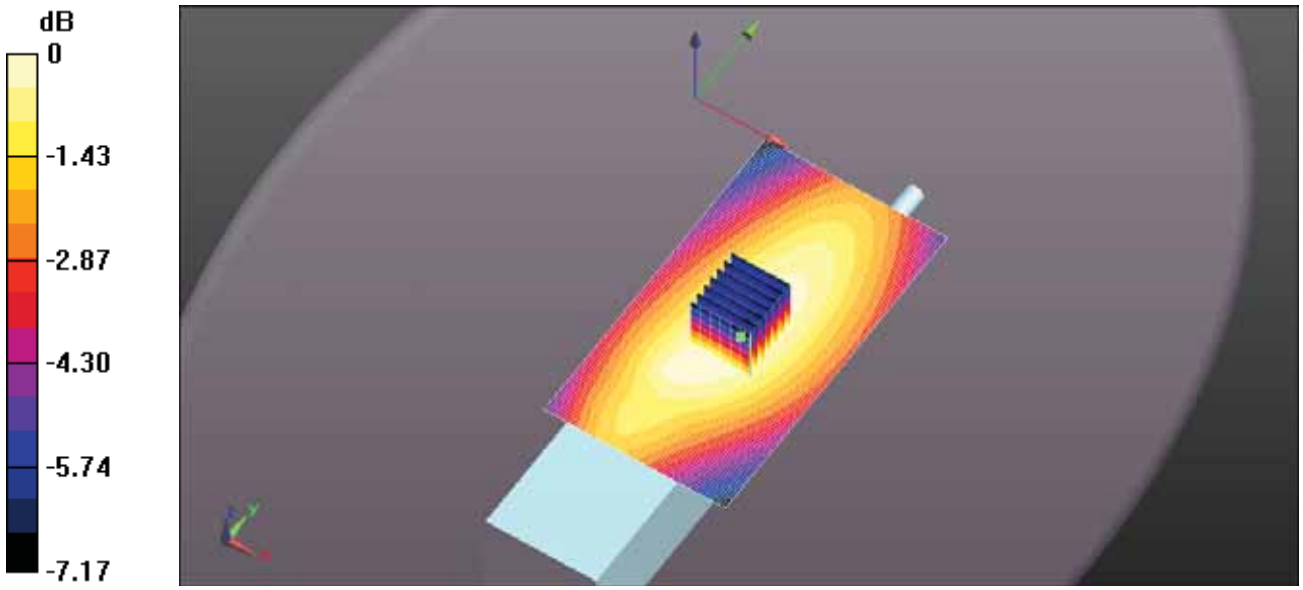

0 dB = 0.584 W/kg = -2.33 dBW/kg

Test Laboratory: Ultratech Group of Labs

FILE NAME: ICOM-489Q BODY FA-SC61VC 141MM 142.3MHZ.DA52:0

DUT: IC-F1100DT; Type: VHF Receiver; Serial: 32000201-0

Communication System: UID 10000, CW; Frequency: 142.3 MHz; Duty Cycle: 1:1
Medium parameters used (interpolated): f = 142.3 MHz; σ = 0.836 S/m; ε_r = 63.771; ρ = 1000 kg/m^3 ;
Phantom section: Flat Section ; Measurement Standard: DASY5 (IEEE/IEC/ANSI C63.19-2011)

DASY Configuration:

- Probe: ES3DV3 - SN3250; ConvF(7.29, 7.29, 7.29); Calibrated: 3/13/2018;
- Sensor-Surface: 3mm (Mechanical Surface Detection)
- Electronics: DAE4 Sn874; Calibrated: 8/21/2017
- Phantom: ELI 4.0; Type: QD OVA 001 BB; Serial: 1057
- DASY52 52.10.0(1446); SEMCAD X 14.6.10(7417)

Configuration Body for IC-F1100DT/Body Back, P=5W, d=0mm/Zoom Scan (7x7x7) (7x7x7)/Cube 0: Measurement grid: dx=5mm, dy=5mm, dz=5mm
Reference Value = 27.59 V/m; Power Drift = -0.10 dB
Peak SAR (extrapolated) = 0.898 W/kg
SAR(1 g) = 0.617 W/kg; SAR(10 g) = 0.458 W/kg (SAR corrected for target medium)
Maximum value of SAR (measured) = 0.690 W/kg

Configuration Body for IC-F1100DT/Body Back, P=5W, d=0mm/Area Scan (61x111x1):
Interpolated grid: dx=1.500 mm, dy=1.500 mm
Maximum value of SAR (interpolated) = 0.700 W/kg

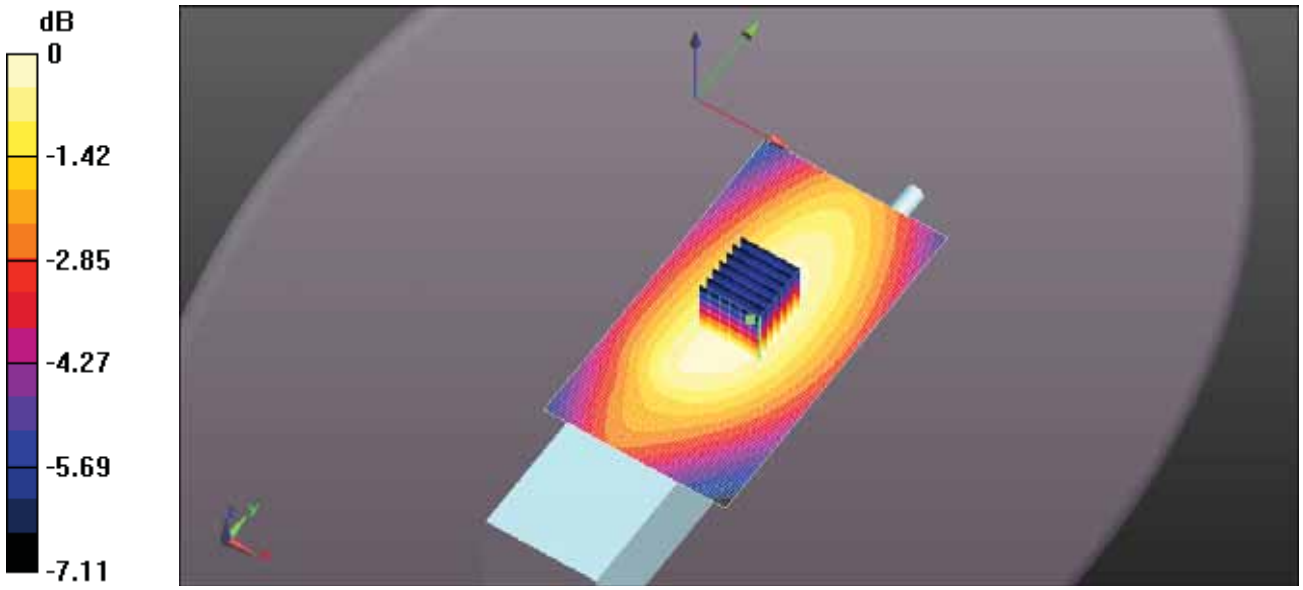

0 dB = 0.690 W/kg = -1.61 dBW/kg

Test Laboratory: Ultratech Group of Labs

FILE NAME: ICOM-489Q BODY FA-SC61VC 141MM 148.7MHZ.DA52:0

DUT: IC-F1100DT; Type: VHF Receiver; Serial: 32000201-0

Communication System: UID 10000, CW; Frequency: 148.7 MHz; Duty Cycle: 1:1
Medium parameters used (interpolated): f = 148.7 MHz; σ = 0.837 S/m; ε_r = 63.661; ρ = 1000 kg/m^3 ;
Phantom section: Flat Section ; Measurement Standard: DASY5 (IEEE/IEC/ANSI C63.19-2011)

DASY Configuration:

- Probe: ES3DV3 - SN3250; ConvF(7.29, 7.29, 7.29); Calibrated: 3/13/2018;
- Sensor-Surface: 3mm (Mechanical Surface Detection)
- Electronics: DAE4 Sn874; Calibrated: 8/21/2017
- Phantom: ELI 4.0; Type: QD OVA 001 BB; Serial: 1057
- DASY52 52.10.0(1446); SEMCAD X 14.6.10(7417)

Configuration Body for IC-F1100DT/Body Back, P=5W, d=0mm/Zoom Scan (7x7x7) (7x7x7)/Cube 0: Measurement grid: dx=5mm, dy=5mm, dz=5mm
Reference Value = 27.57 V/m; Power Drift = -0.15 dB
Peak SAR (extrapolated) = 0.972 W/kg
SAR(1 g) = 0.657 W/kg; SAR(10 g) = 0.481 W/kg (SAR corrected for target medium)
Maximum value of SAR (measured) = 0.740 W/kg

Configuration Body for IC-F1100DT/Body Back, P=5W, d=0mm/Area Scan (61x111x1):
Interpolated grid: dx=1.500 mm, dy=1.500 mm
Maximum value of SAR (interpolated) = 0.761 W/kg

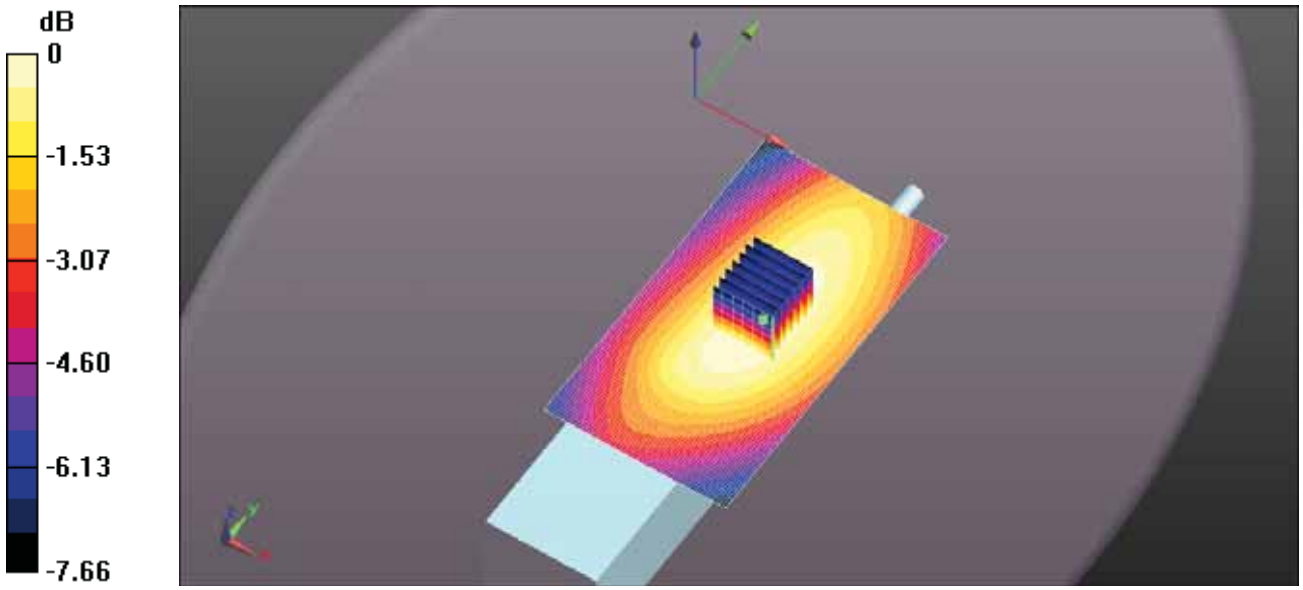

0 dB = 0.740 W/kg = -1.31 dBW/kg

Test Laboratory: Ultratech Group of Labs

FILE NAME: ICOM-489Q BODY FA-SC61VC 141MM 155MHZ.DA52:0

DUT: IC-F1100DT; Type: VHF Receiver; Serial: 32000201-0

Communication System: UID 10000, CW; Frequency: 155 MHz; Duty Cycle: 1:1
Medium parameters used (interpolated): f = 155 MHz; σ = 0.841 S/m; ε_r = 64.042; ρ = 1000 kg/m^3 ;
Phantom section: Flat Section ; Measurement Standard: DASY5 (IEEE/IEC/ANSI C63.19-2011)

DASY Configuration:

- Probe: ES3DV3 - SN3250; ConvF(7.29, 7.29, 7.29); Calibrated: 3/13/2018;
- Sensor-Surface: 3mm (Mechanical Surface Detection)
- Electronics: DAE4 Sn874; Calibrated: 8/21/2017
- Phantom: ELI 4.0; Type: QD OVA 001 BB; Serial: 1057
- DASY52 52.10.0(1446); SEMCAD X 14.6.10(7417)

Configuration Body for IC-F1100DT/Body Back, P=5W, d=0mm/Zoom Scan (7x7x7) (7x7x7)/Cube 0: Measurement grid: dx=5mm, dy=5mm, dz=5mm
Reference Value = 30.78 V/m; Power Drift = -0.01 dB
Peak SAR (extrapolated) = 1.36 W/kg
SAR(1 g) = 0.903 W/kg; SAR(10 g) = 0.655 W/kg (SAR corrected for target medium)
Maximum value of SAR (measured) = 1.02 W/kg

Configuration Body for IC-F1100DT/Body Back, P=5W, d=0mm/Area Scan (61x111x1):
Interpolated grid: dx=1.500 mm, dy=1.500 mm
Maximum value of SAR (interpolated) = 1.01 W/kg

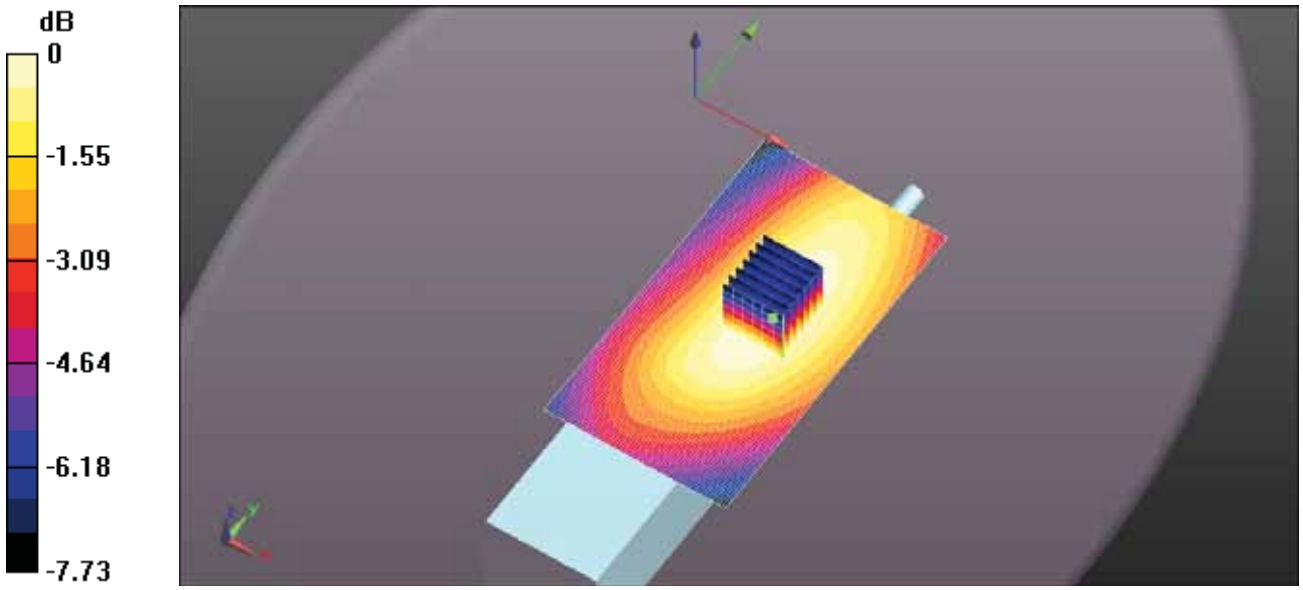

0 dB = 1.02 W/kg = 0.10 dBW/kg

Test Laboratory: Ultratech Group of Labs

FILE NAME: ICOM-489Q BODY FA-SC61VC 141MM 161.3MHZ.DA52:0

DUT: IC-F1100DT; Type: VHF Receiver; Serial: 32000201-0

Communication System: UID 10000, CW; Frequency: 161.3 MHz; Duty Cycle: 1:1
Medium parameters used: f = 162 MHz; σ = 0.843 S/m; ε_r = 64.096; ρ = 1000 kg/m^3 ; Phantom section: Flat Section ; Measurement Standard: DASY5 (IEEE/IEC/ANSI C63.19-2011)

DASY Configuration:

- Probe: ES3DV3 - SN3250; ConvF(7.29, 7.29, 7.29); Calibrated: 3/13/2018;
- Sensor-Surface: 3mm (Mechanical Surface Detection)
- Electronics: DAE4 Sn874; Calibrated: 8/21/2017
- Phantom: ELI 4.0; Type: QD OVA 001 BB; Serial: 1057
- DASY52 52.10.0(1446); SEMCAD X 14.6.10(7417)

Configuration Body for IC-F1100DT/Body Back, P=5W, d=0mm/Zoom Scan (7x7x7) (7x7x7)/Cube 0: Measurement grid: dx=5mm, dy=5mm, dz=5mm
Reference Value = 23.02 V/m; Power Drift = -0.04 dB
Peak SAR (extrapolated) = 0.753 W/kg
SAR(1 g) = 0.427 W/kg; SAR(10 g) = 0.288 W/kg (SAR corrected for target medium)
Maximum value of SAR (measured) = 0.495 W/kg

Configuration Body for IC-F1100DT/Body Back, P=5W, d=0mm/Area Scan (61x111x1):
Interpolated grid: dx=1.500 mm, dy=1.500 mm
Maximum value of SAR (interpolated) = 0.503 W/kg

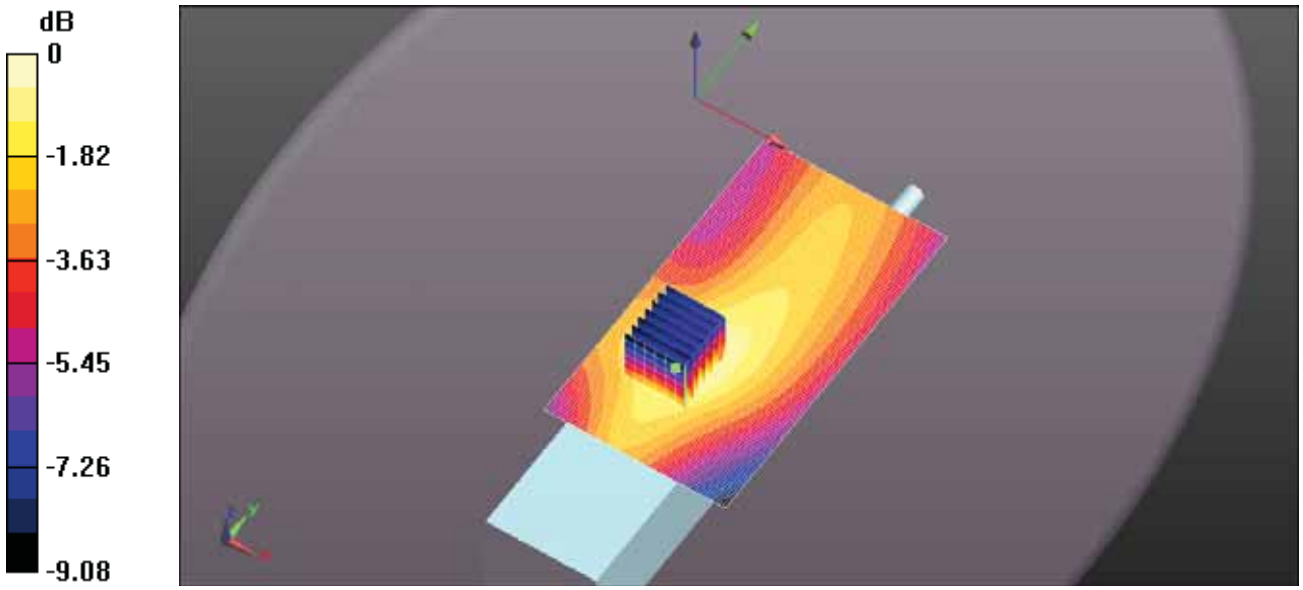

0 dB = 0.495 W/kg = -3.06 dBW/kg

Test Laboratory: Ultratech Group of Labs

FILE NAME: ICOM-489Q BODY FA-SC61VC 141MM 167.7MHZ.DA52:0

DUT: IC-F1100DT; Type: VHF Receiver; Serial: 32000201-0

Communication System: UID 10000, CW; Frequency: 167.7 MHz; Duty Cycle: 1:1
Medium parameters used: f = 168 MHz; σ = 0.845 S/m; ε_r = 64.002; ρ = 1000 kg/m^3 ; Phantom section: Flat Section ; Measurement Standard: DASY5 (IEEE/IEC/ANSI C63.19-2011)

DASY Configuration:

- Probe: ES3DV3 - SN3250; ConvF(7.29, 7.29, 7.29); Calibrated: 3/13/2018;
- Sensor-Surface: 3mm (Mechanical Surface Detection)
- Electronics: DAE4 Sn874; Calibrated: 8/21/2017
- Phantom: ELI 4.0; Type: QD OVA 001 BB; Serial: 1057
- DASY52 52.10.0(1446); SEMCAD X 14.6.10(7417)

Configuration Body for IC-F1100DT/Body Back, P=5W, d=0mm/Zoom Scan (7x7x7) (9x13x7)/Cube 0: Measurement grid: dx=5mm, dy=5mm, dz=5mm
Reference Value = 17.09 V/m; Power Drift = 0.40 dB
Peak SAR (extrapolated) = 0.404 W/kg
SAR(1 g) = 0.264 W/kg; SAR(10 g) = 0.190 W/kg (SAR corrected for target medium)
Maximum value of SAR (measured) = 0.300 W/kg

Configuration Body for IC-F1100DT/Body Back, P=5W, d=0mm/Area Scan (61x111x1):
Interpolated grid: dx=1.500 mm, dy=1.500 mm
Maximum value of SAR (interpolated) = 0.276 W/kg

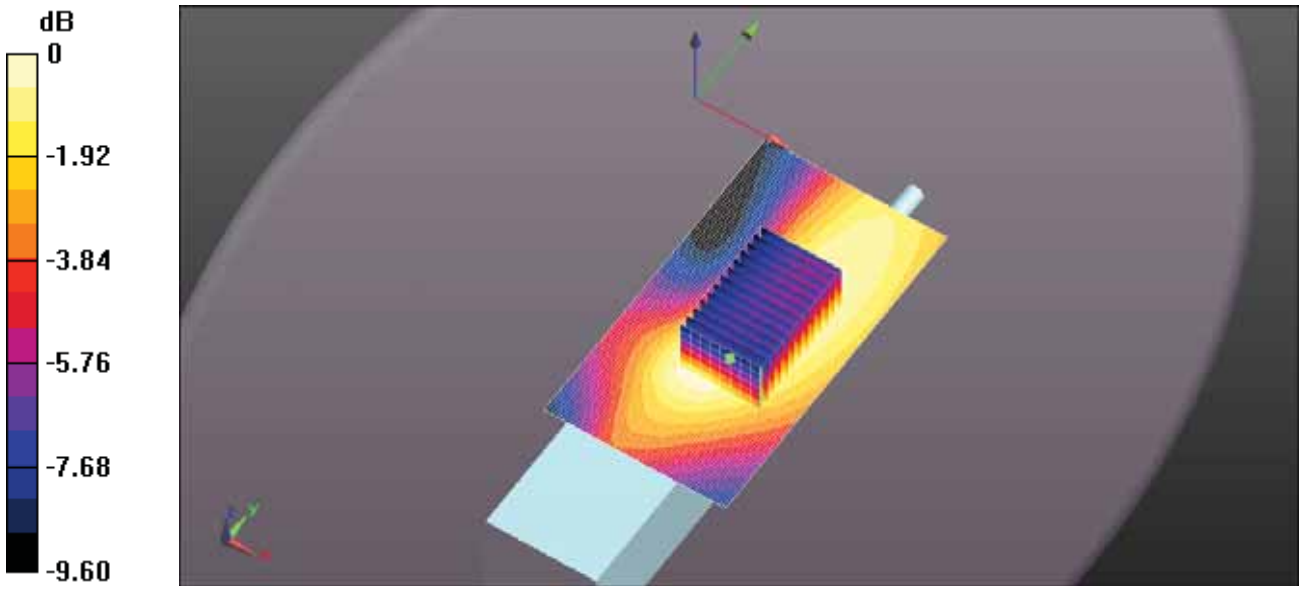

0 dB = 0.300 W/kg = -5.23 dBW/kg

Test Laboratory: Ultratech Group of Labs

FILE NAME: ICOM-489Q BODY FA-SC61VC 141MM 174MHZ.DA52:0

DUT: IC-F1100DT; Type: VHF Receiver; Serial: 32000201-0

Communication System: UID 10000, CW; Frequency: 174 MHz; Duty Cycle: 1:1
Medium parameters used: f = 174 MHz; σ = 0.85 S/m; ε_r = 63.898; ρ = 1000 kg/m^3 ; Phantom section: Flat Section ; Measurement Standard: DASY5 (IEEE/IEC/ANSI C63.19-2011)

DASY Configuration:

- Probe: ES3DV3 - SN3250; ConvF(7.29, 7.29, 7.29); Calibrated: 3/13/2018;
- Sensor-Surface: 3mm (Mechanical Surface Detection)
- Electronics: DAE4 Sn874; Calibrated: 8/21/2017
- Phantom: ELI 4.0; Type: QD OVA 001 BB; Serial: 1057
- DASY52 52.10.0(1446); SEMCAD X 14.6.10(7417)

Configuration Body for IC-F1100DT/Body Back, P=5W, d=0mm/Zoom Scan (7x7x7) (9x13x7)/Cube 0: Measurement grid: dx=5mm, dy=5mm, dz=5mm
Reference Value = 26.88 V/m; Power Drift = 0.99 dB
Peak SAR (extrapolated) = 0.971 W/kg
SAR(1 g) = 0.609 W/kg; SAR(10 g) = 0.454 W/kg (SAR corrected for target medium)
Maximum value of SAR (measured) = 0.684 W/kg

Configuration Body for IC-F1100DT/Body Back, P=5W, d=0mm/Area Scan (61x111x1):
Interpolated grid: dx=1.500 mm, dy=1.500 mm
Maximum value of SAR (interpolated) = 0.609 W/kg

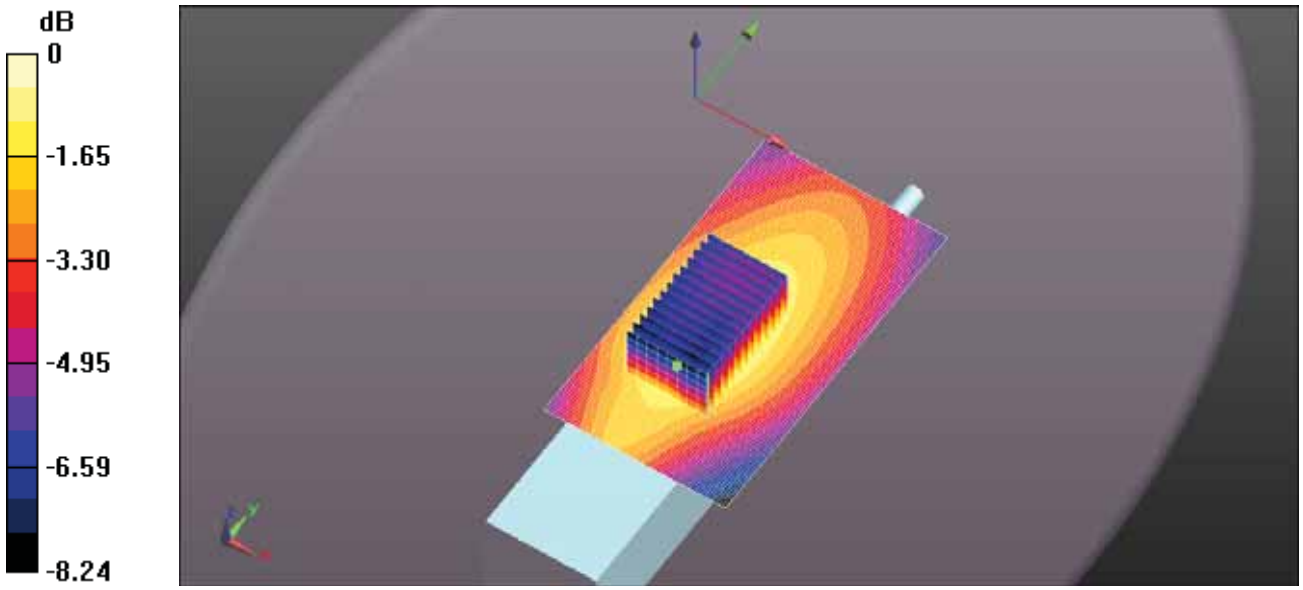

0 dB = 0.684 W/kg = -1.65 dBW/kg

Test Laboratory: Ultratech Group of Labs

FILE NAME: ICOM-489Q BODY FA-SC61VC 137MM 136MHZ.DA52:0

DUT: IC-F1100DT; Type: VHF Receiver; Serial: 32000201-0

Communication System: UID 10000, CW; Frequency: 136 MHz; Duty Cycle: 1:1
Medium parameters used: f = 136 MHz; σ = 0.835 S/m; ε_r = 63.621; ρ = 1000 kg/m^3 ; Phantom section: Flat Section ; Measurement Standard: DASY5 (IEEE/IEC/ANSI C63.19-2011)

DASY Configuration:

- Probe: ES3DV3 - SN3250; ConvF(7.29, 7.29, 7.29); Calibrated: 3/13/2018;
- Sensor-Surface: 3mm (Mechanical Surface Detection)
- Electronics: DAE4 Sn874; Calibrated: 8/21/2017
- Phantom: ELI 4.0; Type: QD OVA 001 BB; Serial: 1057
- DASY52 52.10.0(1446); SEMCAD X 14.6.10(7417)

Configuration Body for IC-F1100DT/Body Back, P=5W, d=0mm/Zoom Scan (7x7x7) (7x7x7)/Cube 0:

Measurement grid: dx=5mm, dy=5mm, dz=5mm
Reference Value = 17.69 V/m; Power Drift = 0.48 dB
Peak SAR (extrapolated) = 0.380 W/kg
SAR(1 g) = 0.260 W/kg; SAR(10 g) = 0.193 W/kg (SAR corrected for target medium)
Maximum value of SAR (measured) = 0.291 W/kg

Configuration Body for IC-F1100DT/Body Back, P=5W, d=0mm/Area Scan (61x111x1):

Interpolated grid: dx=1.500 mm, dy=1.500 mm
Maximum value of SAR (interpolated) = 0.250 W/kg

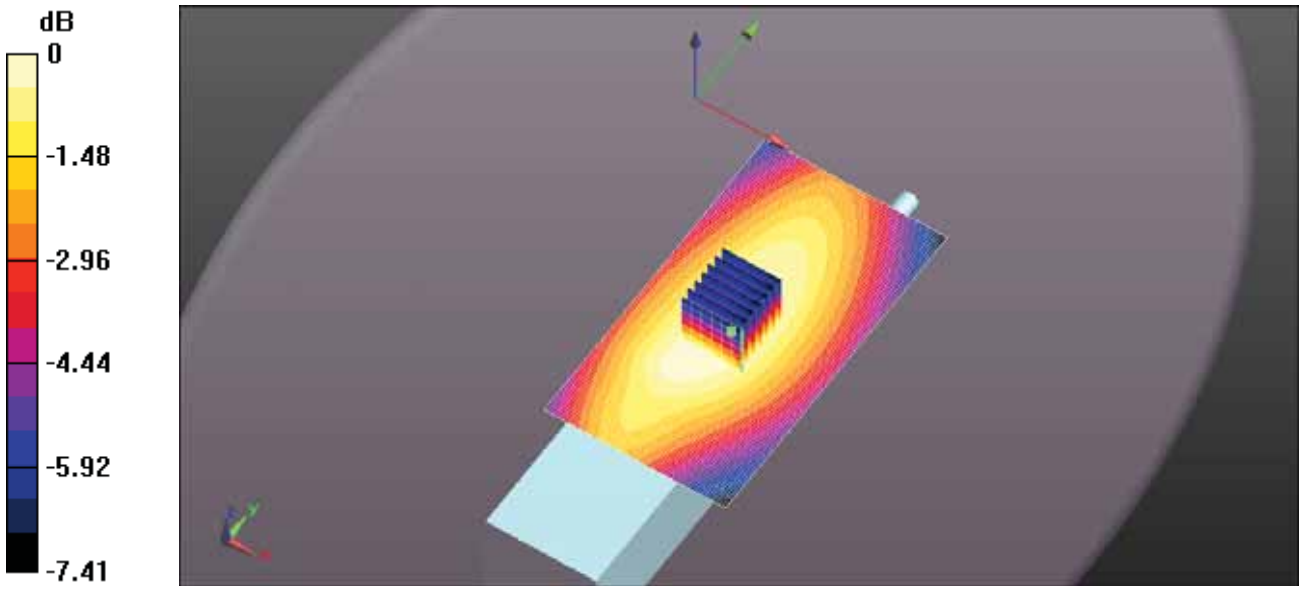

0 dB = 0.291 W/kg = -5.36 dBW/kg

Test Laboratory: Ultratech Group of Labs

FILE NAME: ICOM-489Q BODY FA-SC61VC 137MM 142.3MHZ.DA52:0

DUT: IC-F1100DT; Type: VHF Receiver; Serial: 32000201-0

Communication System: UID 10000, CW; Frequency: 142.3 MHz; Duty Cycle: 1:1
Medium parameters used (interpolated): f = 142.3 MHz; σ = 0.836 S/m; ε_r = 63.771; ρ = 1000 kg/m^3 ;
Phantom section: Flat Section ; Measurement Standard: DASY5 (IEEE/IEC/ANSI C63.19-2011)

DASY Configuration:

- Probe: ES3DV3 - SN3250; ConvF(7.29, 7.29, 7.29); Calibrated: 3/13/2018;
- Sensor-Surface: 3mm (Mechanical Surface Detection)
- Electronics: DAE4 Sn874; Calibrated: 8/21/2017
- Phantom: ELI 4.0; Type: QD OVA 001 BB; Serial: 1057
- DASY52 52.10.0(1446); SEMCAD X 14.6.10(7417)

Configuration Body for IC-F1100DT/Body Back, P=5W, d=0mm/Zoom Scan (7x7x7) (7x7x7)/Cube 0: Measurement grid: dx=5mm, dy=5mm, dz=5mm
Reference Value = 20.05 V/m; Power Drift = -0.09 dB
Peak SAR (extrapolated) = 0.479 W/kg
SAR(1 g) = 0.324 W/kg; SAR(10 g) = 0.239 W/kg (SAR corrected for target medium)
Maximum value of SAR (measured) = 0.364 W/kg

Configuration Body for IC-F1100DT/Body Back, P=5W, d=0mm/Area Scan (61x111x1):
Interpolated grid: dx=1.500 mm, dy=1.500 mm
Maximum value of SAR (interpolated) = 0.365 W/kg

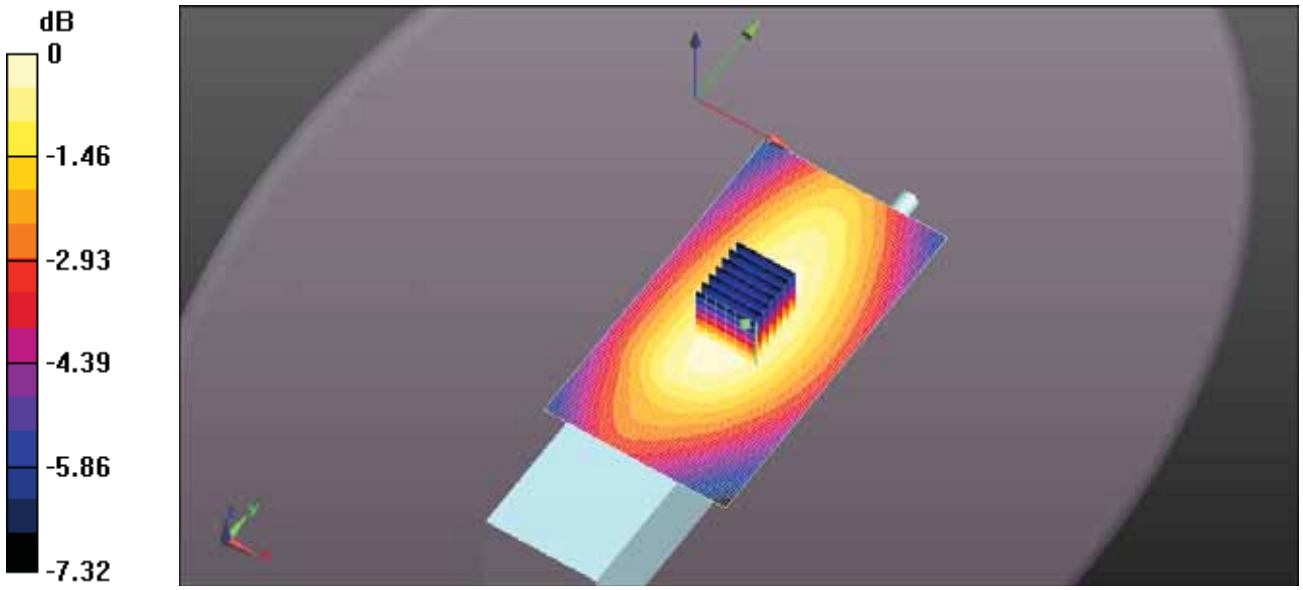

0 dB = 0.364 W/kg = -4.39 dBW/kg

Test Laboratory: Ultratech Group of Labs

FILE NAME: ICOM-489Q BODY FA-SC61VC 137MM 148.7MHZ.DA52:0

DUT: IC-F1100DT; Type: VHF Receiver; Serial: 32000201-0

Communication System: UID 10000, CW; Frequency: 148.7 MHz; Duty Cycle: 1:1
Medium parameters used (interpolated): f = 148.7 MHz; σ = 0.837 S/m; ε_r = 63.661; ρ = 1000 kg/m^3 ;
Phantom section: Flat Section ; Measurement Standard: DASY5 (IEEE/IEC/ANSI C63.19-2011)

DASY Configuration:

- Probe: ES3DV3 - SN3250; ConvF(7.29, 7.29, 7.29); Calibrated: 3/13/2018;
- Sensor-Surface: 3mm (Mechanical Surface Detection)
- Electronics: DAE4 Sn874; Calibrated: 8/21/2017
- Phantom: ELI 4.0; Type: QD OVA 001 BB; Serial: 1057
- DASY52 52.10.0(1446); SEMCAD X 14.6.10(7417)

Configuration Body for IC-F1100DT/Body Back, P=5W, d=0mm/Zoom Scan (7x7x7) (7x7x7)/Cube 0: Measurement grid: dx=5mm, dy=5mm, dz=5mm
Reference Value = 23.69 V/m; Power Drift = -0.17 dB
Peak SAR (extrapolated) = 0.703 W/kg
SAR(1 g) = 0.474 W/kg; SAR(10 g) = 0.347 W/kg (SAR corrected for target medium)
Maximum value of SAR (measured) = 0.534 W/kg

Configuration Body for IC-F1100DT/Body Back, P=5W, d=0mm/Area Scan (61x111x1):
Interpolated grid: dx=1.500 mm, dy=1.500 mm
Maximum value of SAR (interpolated) = 0.550 W/kg

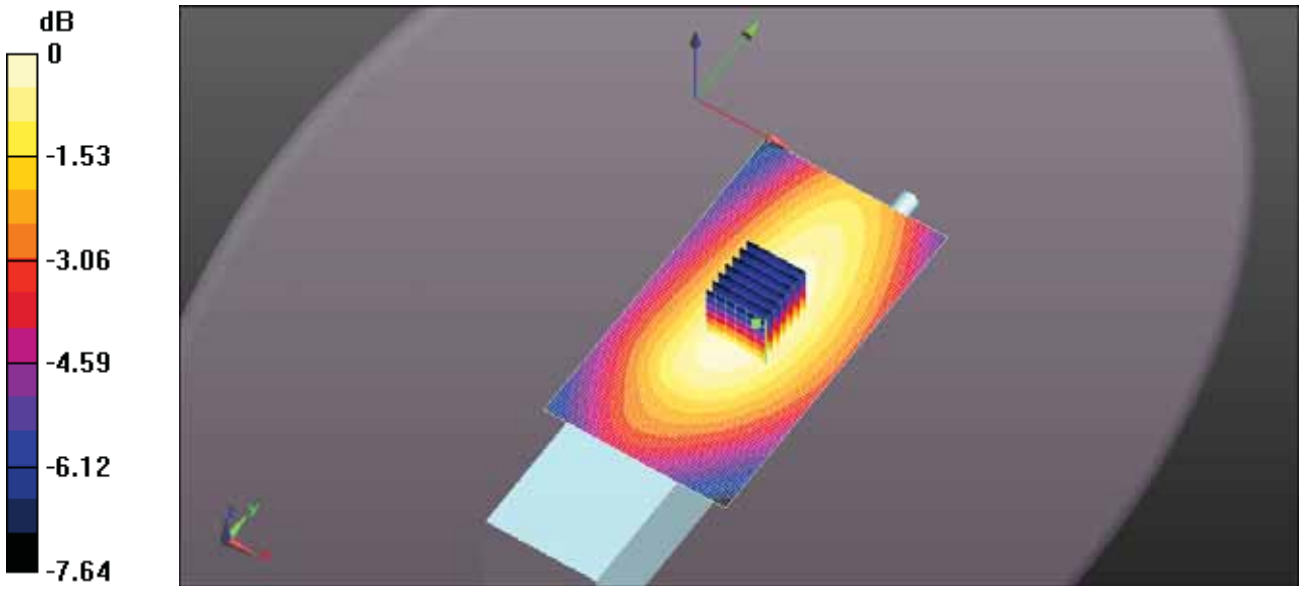

0 dB = 0.534 W/kg = -2.72 dBW/kg

Test Laboratory: Ultratech Group of Labs

FILE NAME: ICOM-489Q BODY FA-SC61VC 137MM 155MHZ.DA52:0

DUT: IC-F1100DT; Type: VHF Receiver; Serial: 32000201-0

Communication System: UID 10000, CW; Frequency: 155 MHz; Duty Cycle: 1:1
Medium parameters used (interpolated): f = 155 MHz; σ = 0.841 S/m; ε_r = 64.042; ρ = 1000 kg/m^3 ;
Phantom section: Flat Section ; Measurement Standard: DASY5 (IEEE/IEC/ANSI C63.19-2011)

DASY Configuration:

- Probe: ES3DV3 - SN3250; ConvF(7.29, 7.29, 7.29); Calibrated: 3/13/2018;
- Sensor-Surface: 3mm (Mechanical Surface Detection)
- Electronics: DAE4 Sn874; Calibrated: 8/21/2017
- Phantom: ELI 4.0; Type: QD OVA 001 BB; Serial: 1057
- DASY52 52.10.0(1446); SEMCAD X 14.6.10(7417)

Configuration Body for IC-F1100DT/Body Back, P=5W, d=0mm/Zoom Scan (7x7x7) (7x7x7)/Cube 0: Measurement grid: dx=5mm, dy=5mm, dz=5mm
Reference Value = 25.99 V/m; Power Drift = -0.06 dB
Peak SAR (extrapolated) = 0.919 W/kg
SAR(1 g) = 0.610 W/kg; SAR(10 g) = 0.441 W/kg (SAR corrected for target medium)
Maximum value of SAR (measured) = 0.692 W/kg

Configuration Body for IC-F1100DT/Body Back, P=5W, d=0mm/Area Scan (61x111x1):
Interpolated grid: dx=1.500 mm, dy=1.500 mm
Maximum value of SAR (interpolated) = 0.702 W/kg

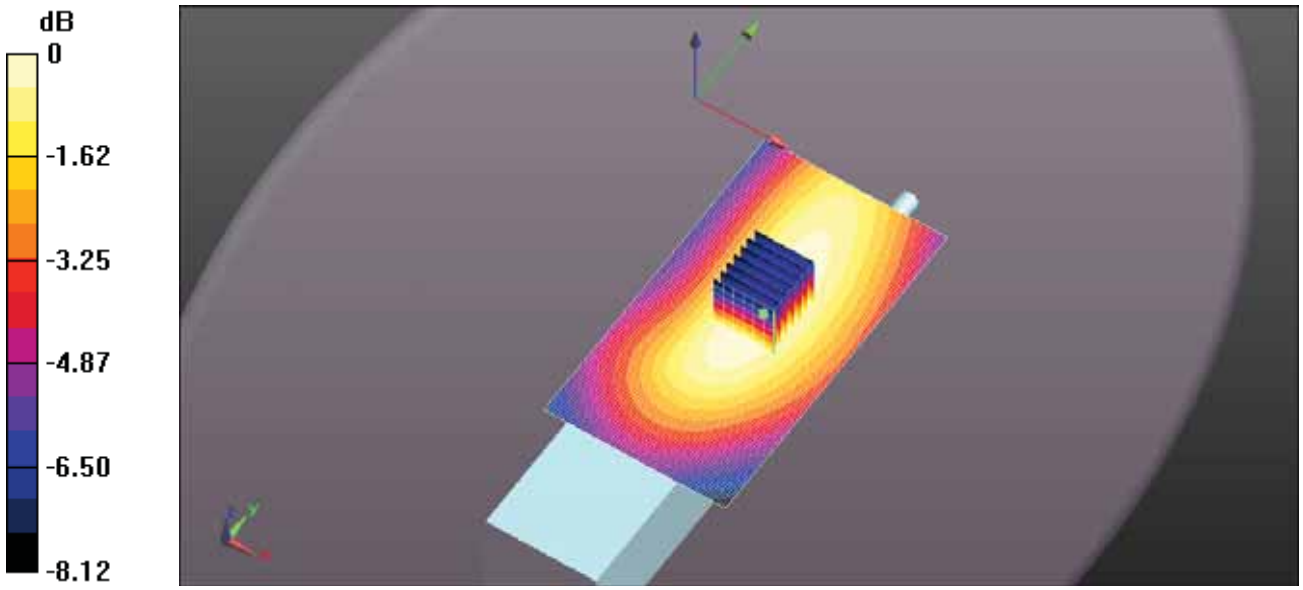

0 dB = 0.692 W/kg = -1.60 dBW/kg

Test Laboratory: Ultratech Group of Labs

FILE NAME: ICOM-489Q BODY FA-SC61VC 137MM 161.3MHZ.DA52:0

DUT: IC-F1100DT; Type: VHF Receiver; Serial: 32000201-0

Communication System: UID 10000, CW; Frequency: 161.3 MHz; Duty Cycle: 1:1
Medium parameters used: f = 162 MHz; σ = 0.843 S/m; ε_r = 64.096; ρ = 1000 kg/m^3 ; Phantom section: Flat Section ; Measurement Standard: DASY5 (IEEE/IEC/ANSI C63.19-2011)

DASY Configuration:

- Probe: ES3DV3 - SN3250; ConvF(7.29, 7.29, 7.29); Calibrated: 3/13/2018;
- Sensor-Surface: 3mm (Mechanical Surface Detection)
- Electronics: DAE4 Sn874; Calibrated: 8/21/2017
- Phantom: ELI 4.0; Type: QD OVA 001 BB; Serial: 1057
- DASY52 52.10.0(1446); SEMCAD X 14.6.10(7417)

Configuration Body for IC-F1100DT/Body Back, P=5W, d=0mm/Zoom Scan (7x7x7) (8x8x7)/Cube 0: Measurement grid: dx=5mm, dy=5mm, dz=5mm
Reference Value = 26.26 V/m; Power Drift = -0.25 dB
Peak SAR (extrapolated) = 0.979 W/kg
SAR(1 g) = 0.645 W/kg; SAR(10 g) = 0.463 W/kg (SAR corrected for target medium)
Maximum value of SAR (measured) = 0.732 W/kg

Configuration Body for IC-F1100DT/Body Back, P=5W, d=0mm/Area Scan (61x111x1):
Interpolated grid: dx=1.500 mm, dy=1.500 mm
Maximum value of SAR (interpolated) = 0.751 W/kg

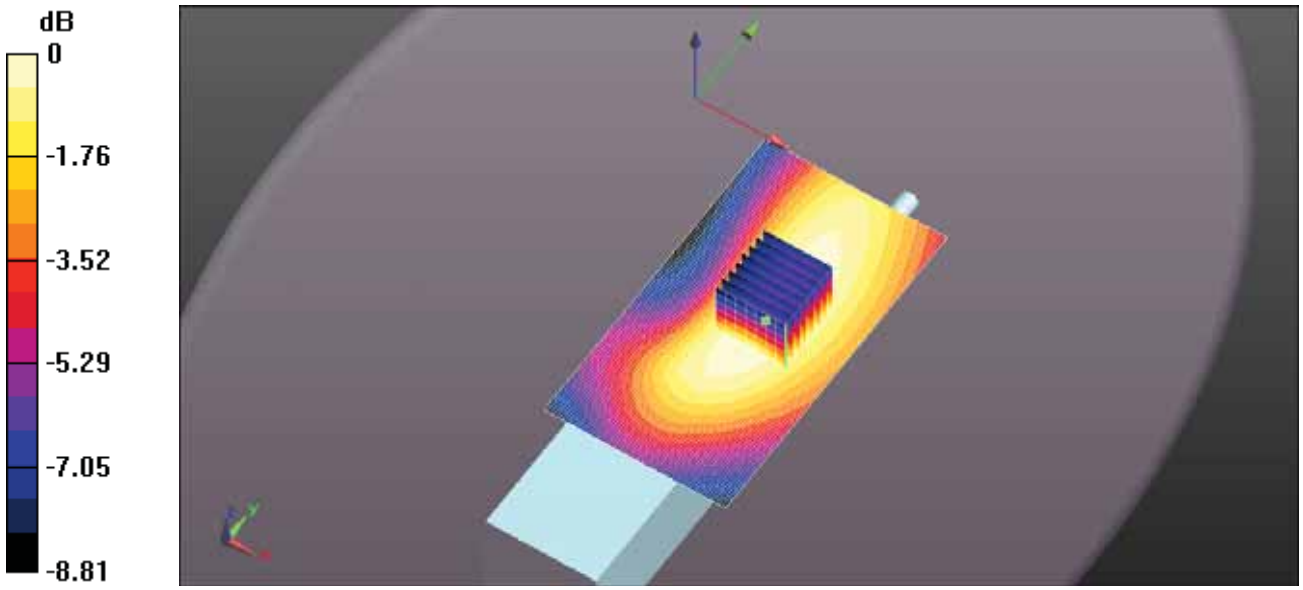

0 dB = 0.732 W/kg = -1.36 dBW/kg

Test Laboratory: Ultratech Group of Labs

FILE NAME: ICOM-489Q BODY FA-SC61VC 137MM 167.7MHZ.DA52:0

DUT: IC-F1100DT; Type: VHF Receiver; Serial: 32000201-0

Communication System: UID 10000, CW; Frequency: 167.7 MHz; Duty Cycle: 1:1
Medium parameters used: f = 168 MHz; σ = 0.845 S/m; ε_r = 64.002; ρ = 1000 kg/m^3 ; Phantom section: Flat Section ; Measurement Standard: DASY5 (IEEE/IEC/ANSI C63.19-2011)

DASY Configuration:

- Probe: ES3DV3 - SN3250; ConvF(7.29, 7.29, 7.29); Calibrated: 3/13/2018;
- Sensor-Surface: 3mm (Mechanical Surface Detection)
- Electronics: DAE4 Sn874; Calibrated: 8/21/2017
- Phantom: ELI 4.0; Type: QD OVA 001 BB; Serial: 1057
- DASY52 52.10.0(1446); SEMCAD X 14.6.10(7417)

Configuration Body for IC-F1100DT/Body Back, P=5W, d=0mm/Zoom Scan (7x7x7) (7x7x7)/Cube 0: Measurement grid: dx=5mm, dy=5mm, dz=5mm
Reference Value = 26.41 V/m; Power Drift = 0.75 dB
Peak SAR (extrapolated) = 1.04 W/kg
SAR(1 g) = 0.620 W/kg; SAR(10 g) = 0.436 W/kg (SAR corrected for target medium)
Maximum value of SAR (measured) = 0.710 W/kg

Configuration Body for IC-F1100DT/Body Back, P=5W, d=0mm/Area Scan (61x111x1):
Interpolated grid: dx=1.500 mm, dy=1.500 mm
Maximum value of SAR (interpolated) = 0.620 W/kg

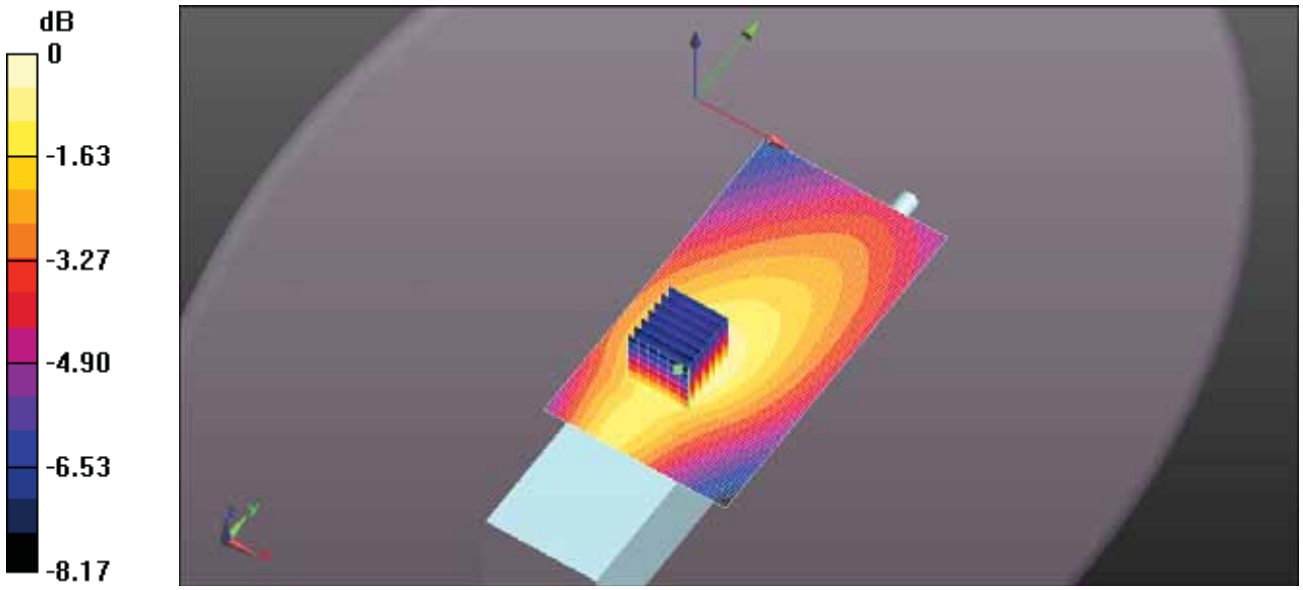

0 dB = 0.710 W/kg = -1.48 dBW/kg

Test Laboratory: Ultratech Group of Labs

FILE NAME: ICOM-489Q BODY FA-SC61VC 137MM 174MHZ.DA52:0

DUT: IC-F1100DT; Type: VHF Receiver; Serial: 32000201-0

Communication System: UID 10000, CW; Frequency: 174 MHz; Duty Cycle: 1:1
Medium parameters used: f = 174 MHz; σ = 0.85 S/m; ε_r = 63.898; ρ = 1000 kg/m^3 ; Phantom section: Flat Section ; Measurement Standard: DASY5 (IEEE/IEC/ANSI C63.19-2011)

DASY Configuration:

- Probe: ES3DV3 - SN3250; ConvF(7.29, 7.29, 7.29); Calibrated: 3/13/2018;
- Sensor-Surface: 3mm (Mechanical Surface Detection)
- Electronics: DAE4 Sn874; Calibrated: 8/21/2017
- Phantom: ELI 4.0; Type: QD OVA 001 BB; Serial: 1057
- DASY52 52.10.0(1446); SEMCAD X 14.6.10(7417)

Configuration Body for IC-F1100DT/Body Back, P=5W, d=0mm/Zoom Scan (7x7x7) (7x7x7)/Cube 0:

Measurement grid: dx=5mm, dy=5mm, dz=5mm
Reference Value = 22.75 V/m; Power Drift = 0.49 dB
Peak SAR (extrapolated) = 0.782 W/kg
SAR(1 g) = 0.447 W/kg; SAR(10 g) = 0.310 W/kg (SAR corrected for target medium)
Maximum value of SAR (measured) = 0.516 W/kg

Configuration Body for IC-F1100DT/Body Back, P=5W, d=0mm/Area Scan (61x111x1):

Interpolated grid: dx=1.500 mm, dy=1.500 mm
Maximum value of SAR (interpolated) = 0.483 W/kg

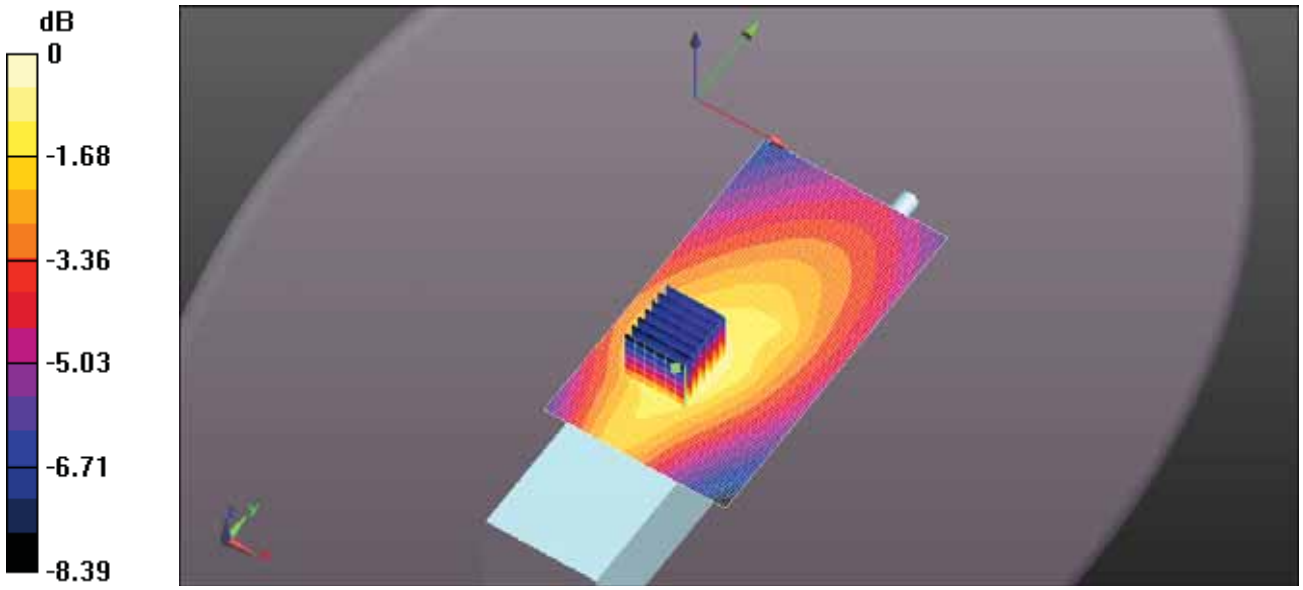

0 dB = 0.516 W/kg = -2.87 dBW/kg

Test Laboratory: Ultratech Group of Labs

FILE NAME: ICOM-489Q BODY FA-SC61VC 133MM 136MHZ.DA52:0

DUT: IC-F1100DT; Type: VHF Receiver; Serial: 32000201-0

Communication System: UID 10000, CW; Frequency: 136 MHz; Duty Cycle: 1:1
Medium parameters used: f = 136 MHz; σ = 0.835 S/m; ε_r = 63.621; ρ = 1000 kg/m^3 ; Phantom section: Flat Section ; Measurement Standard: DASY5 (IEEE/IEC/ANSI C63.19-2011)

DASY Configuration:

- Probe: ES3DV3 - SN3250; ConvF(7.29, 7.29, 7.29); Calibrated: 3/13/2018;
- Sensor-Surface: 3mm (Mechanical Surface Detection)
- Electronics: DAE4 Sn874; Calibrated: 8/21/2017
- Phantom: ELI 4.0; Type: QD OVA 001 BB; Serial: 1057
- DASY52 52.10.0(1446); SEMCAD X 14.6.10(7417)

Configuration Body for IC-F1100DT/Body Back, P=5W, d=0mm/Zoom Scan (7x7x7) (7x7x7)/Cube 0: Measurement grid: dx=5mm, dy=5mm, dz=5mm
Reference Value = 16.02 V/m; Power Drift = 0.45 dB
Peak SAR (extrapolated) = 0.320 W/kg
SAR(1 g) = 0.218 W/kg; SAR(10 g) = 0.162 W/kg (SAR corrected for target medium)
Maximum value of SAR (measured) = 0.246 W/kg

Configuration Body for IC-F1100DT/Body Back, P=5W, d=0mm/Area Scan (61x111x1):
Interpolated grid: dx=1.500 mm, dy=1.500 mm
Maximum value of SAR (interpolated) = 0.211 W/kg

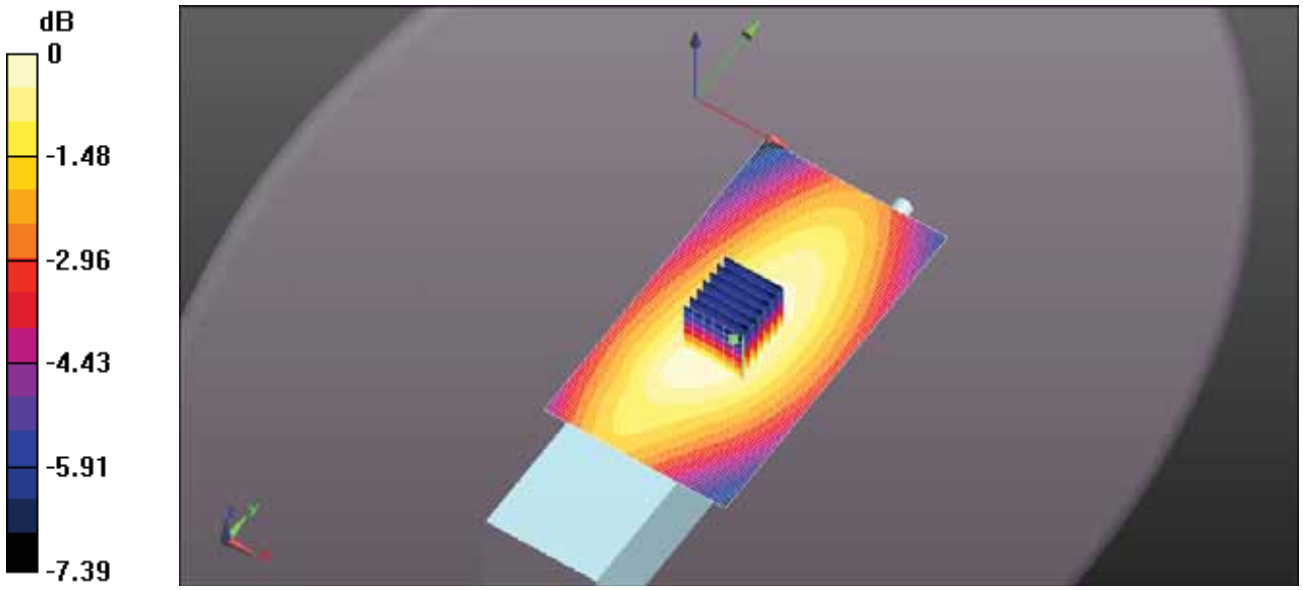

0 dB = 0.246 W/kg = -6.10 dBW/kg

Test Laboratory: Ultratech Group of Labs

FILE NAME: ICOM-489Q BODY FA-SC61VC 133MM 142.3MHZ.DA52:0

DUT: IC-F1100DT; Type: VHF Receiver; Serial: 32000201-0

Communication System: UID 10000, CW; Frequency: 142.3 MHz; Duty Cycle: 1:1
Medium parameters used (interpolated): f = 142.3 MHz; σ = 0.836 S/m; ε_r = 63.771; ρ = 1000 kg/m^3 ;
Phantom section: Flat Section ; Measurement Standard: DASY5 (IEEE/IEC/ANSI C63.19-2011)

DASY Configuration:

- Probe: ES3DV3 - SN3250; ConvF(7.29, 7.29, 7.29); Calibrated: 3/13/2018;
- Sensor-Surface: 3mm (Mechanical Surface Detection)
- Electronics: DAE4 Sn874; Calibrated: 8/21/2017
- Phantom: ELI 4.0; Type: QD OVA 001 BB; Serial: 1057
- DASY52 52.10.0(1446); SEMCAD X 14.6.10(7417)

Configuration Body for IC-F1100DT/Body Back, P=5W, d=0mm/Zoom Scan (7x7x7) (7x7x7)/Cube 0: Measurement grid: dx=5mm, dy=5mm, dz=5mm
Reference Value = 18.58 V/m; Power Drift = -0.07 dB
Peak SAR (extrapolated) = 0.405 W/kg
SAR(1 g) = 0.274 W/kg; SAR(10 g) = 0.202 W/kg (SAR corrected for target medium)
Maximum value of SAR (measured) = 0.308 W/kg

Configuration Body for IC-F1100DT/Body Back, P=5W, d=0mm/Area Scan (61x111x1):
Interpolated grid: dx=1.500 mm, dy=1.500 mm
Maximum value of SAR (interpolated) = 0.310 W/kg

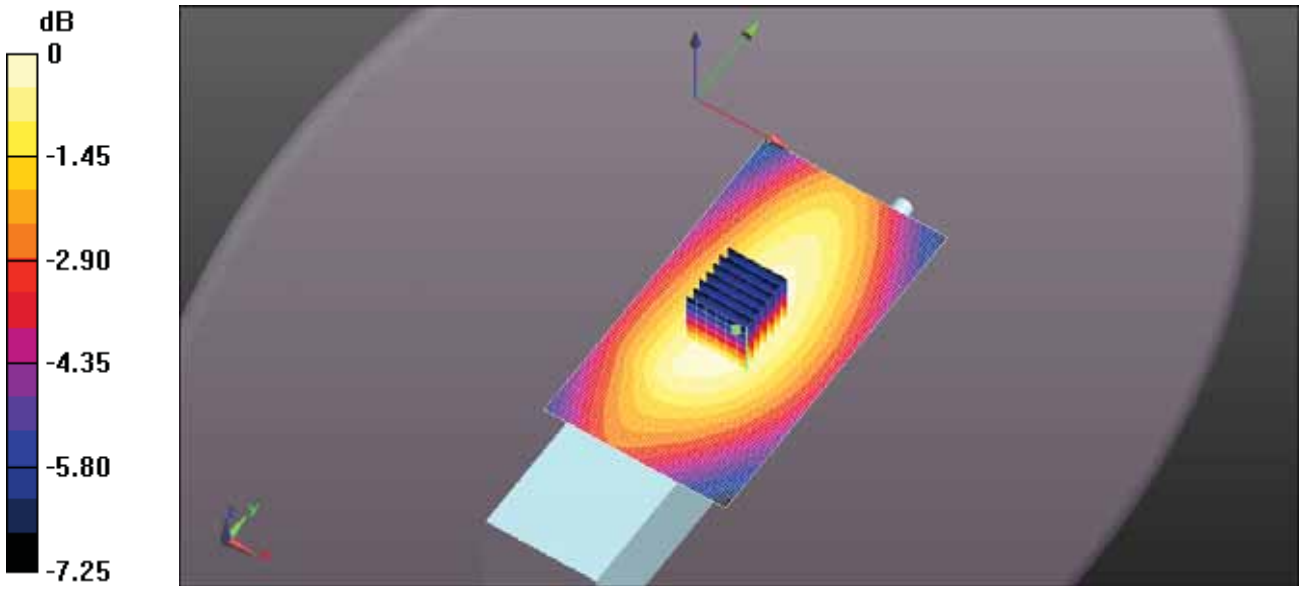

0 dB = 0.308 W/kg = -5.11 dBW/kg

Test Laboratory: Ultratech Group of Labs

FILE NAME: ICOM-489Q BODY FA-SC61VC 133MM 148.7MHZ.DA52:0

DUT: IC-F1100DT; Type: VHF Receiver; Serial: 32000201-0

Communication System: UID 10000, CW; Frequency: 148.7 MHz; Duty Cycle: 1:1
Medium parameters used (interpolated): f = 148.7 MHz; σ = 0.837 S/m; ε_r = 63.661; ρ = 1000 kg/m^3 ;
Phantom section: Flat Section ; Measurement Standard: DASY5 (IEEE/IEC/ANSI C63.19-2011)

DASY Configuration:

- Probe: ES3DV3 - SN3250; ConvF(7.29, 7.29, 7.29); Calibrated: 3/13/2018;
- Sensor-Surface: 3mm (Mechanical Surface Detection)
- Electronics: DAE4 Sn874; Calibrated: 8/21/2017
- Phantom: ELI 4.0; Type: QD OVA 001 BB; Serial: 1057
- DASY52 52.10.0(1446); SEMCAD X 14.6.10(7417)

Configuration Body for IC-F1100DT/Body Back, P=5W, d=0mm/Zoom Scan (7x7x7) (7x7x7)/Cube 0: Measurement grid: dx=5mm, dy=5mm, dz=5mm
Reference Value = 21.48 V/m; Power Drift = -0.14 dB
Peak SAR (extrapolated) = 0.579 W/kg
SAR(1 g) = 0.386 W/kg; SAR(10 g) = 0.279 W/kg (SAR corrected for target medium)
Maximum value of SAR (measured) = 0.436 W/kg

Configuration Body for IC-F1100DT/Body Back, P=5W, d=0mm/Area Scan (61x111x1):
Interpolated grid: dx=1.500 mm, dy=1.500 mm
Maximum value of SAR (interpolated) = 0.443 W/kg

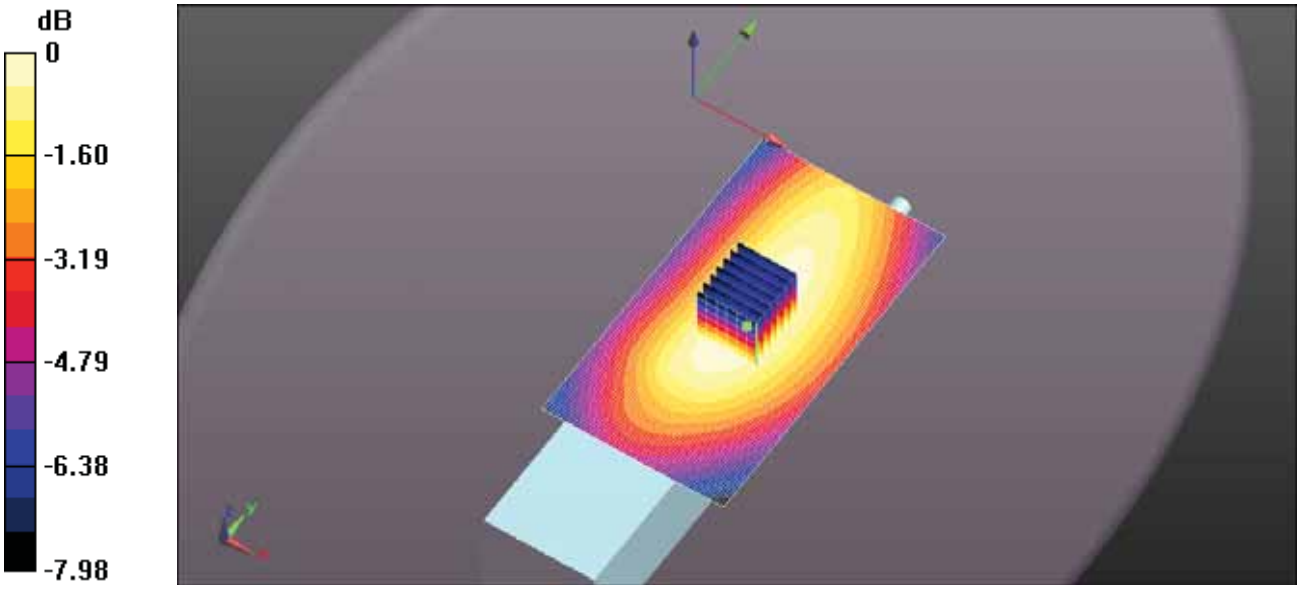

0 dB = 0.436 W/kg = -3.60 dBW/kg

Test Laboratory: Ultratech Group of Labs

FILE NAME: ICOM-489Q BODY FA-SC61VC 133MM 155MHZ.DA52:0

DUT: IC-F1100DT; Type: VHF Receiver; Serial: 32000201-0

Communication System: UID 10000, CW; Frequency: 155 MHz; Duty Cycle: 1:1
Medium parameters used (interpolated): f = 155 MHz; σ = 0.841 S/m; ε_r = 64.042; ρ = 1000 kg/m^3 ;
Phantom section: Flat Section ; Measurement Standard: DASY5 (IEEE/IEC/ANSI C63.19-2011)

DASY Configuration:

- Probe: ES3DV3 - SN3250; ConvF(7.29, 7.29, 7.29); Calibrated: 3/13/2018;
- Sensor-Surface: 3mm (Mechanical Surface Detection)
- Electronics: DAE4 Sn874; Calibrated: 8/21/2017
- Phantom: ELI 4.0; Type: QD OVA 001 BB; Serial: 1057
- DASY52 52.10.0(1446); SEMCAD X 14.6.10(7417)

Configuration Body for IC-F1100DT/Body Back, P=5W, d=0mm/Zoom Scan (7x7x7) (7x8x7)/Cube 0: Measurement grid: dx=5mm, dy=5mm, dz=5mm
Reference Value = 24.74 V/m; Power Drift = -0.04 dB
Peak SAR (extrapolated) = 0.801 W/kg
SAR(1 g) = 0.530 W/kg; SAR(10 g) = 0.383 W/kg (SAR corrected for target medium)
Maximum value of SAR (measured) = 0.601 W/kg

Configuration Body for IC-F1100DT/Body Back, P=5W, d=0mm/Area Scan (61x111x1):
Interpolated grid: dx=1.500 mm, dy=1.500 mm
Maximum value of SAR (interpolated) = 0.607 W/kg

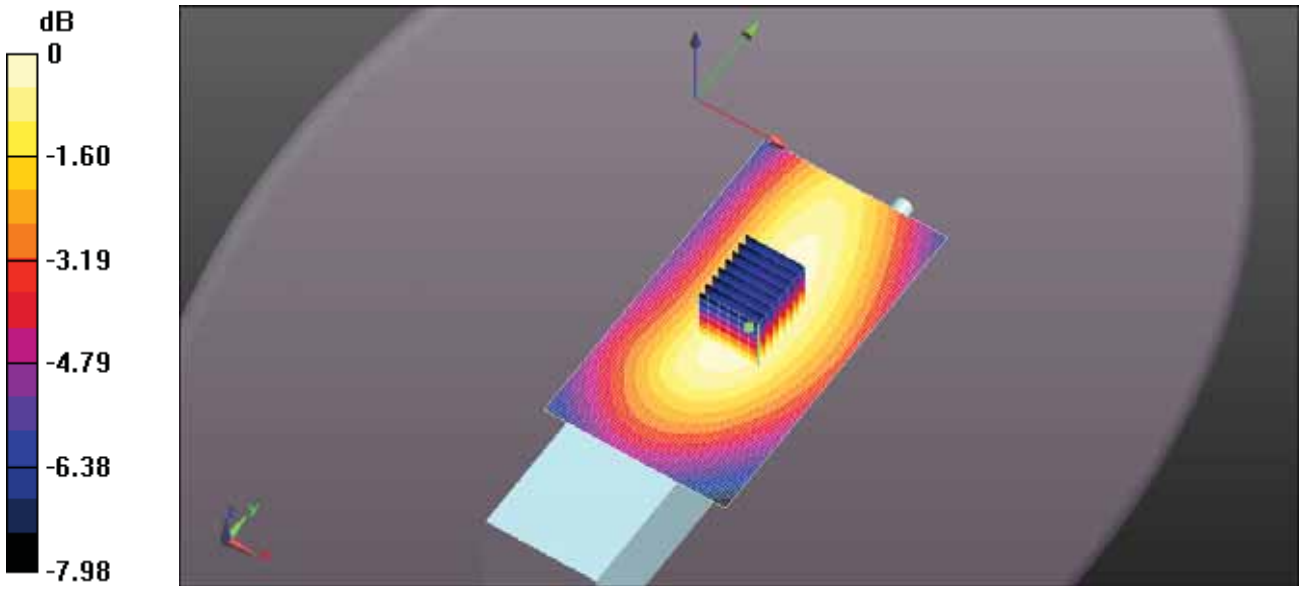

0 dB = 0.601 W/kg = -2.21 dBW/kg

Test Laboratory: Ultratech Group of Labs

FILE NAME: ICOM-489Q BODY FA-SC61VC 133MM 161.3MHZ.DA52:0

DUT: IC-F1100DT; Type: VHF Receiver; Serial: 32000201-0

Communication System: UID 10000, CW; Frequency: 161.3 MHz; Duty Cycle: 1:1
Medium parameters used: f = 162 MHz; σ = 0.843 S/m; ε_r = 64.096; ρ = 1000 kg/m^3 ; Phantom section: Flat Section ; Measurement Standard: DASY5 (IEEE/IEC/ANSI C63.19-2011)

DASY Configuration:

- Probe: ES3DV3 - SN3250; ConvF(7.29, 7.29, 7.29); Calibrated: 3/13/2018;
- Sensor-Surface: 3mm (Mechanical Surface Detection)
- Electronics: DAE4 Sn874; Calibrated: 8/21/2017
- Phantom: ELI 4.0; Type: QD OVA 001 BB; Serial: 1057
- DASY52 52.10.0(1446); SEMCAD X 14.6.10(7417)

Configuration Body for IC-F1100DT/Body Back, P=5W, d=0mm/Zoom Scan (7x7x7) (8x8x7)/Cube 0: Measurement grid: dx=5mm, dy=5mm, dz=5mm
Reference Value = 26.45 V/m; Power Drift = -0.19 dB
Peak SAR (extrapolated) = 0.927 W/kg
SAR(1 g) = 0.542 W/kg; SAR(10 g) = 0.374 W/kg (SAR corrected for target medium)
Maximum value of SAR (measured) = 0.625 W/kg

Configuration Body for IC-F1100DT/Body Back, P=5W, d=0mm/Area Scan (61x111x1):
Interpolated grid: dx=1.500 mm, dy=1.500 mm
Maximum value of SAR (interpolated) = 0.654 W/kg

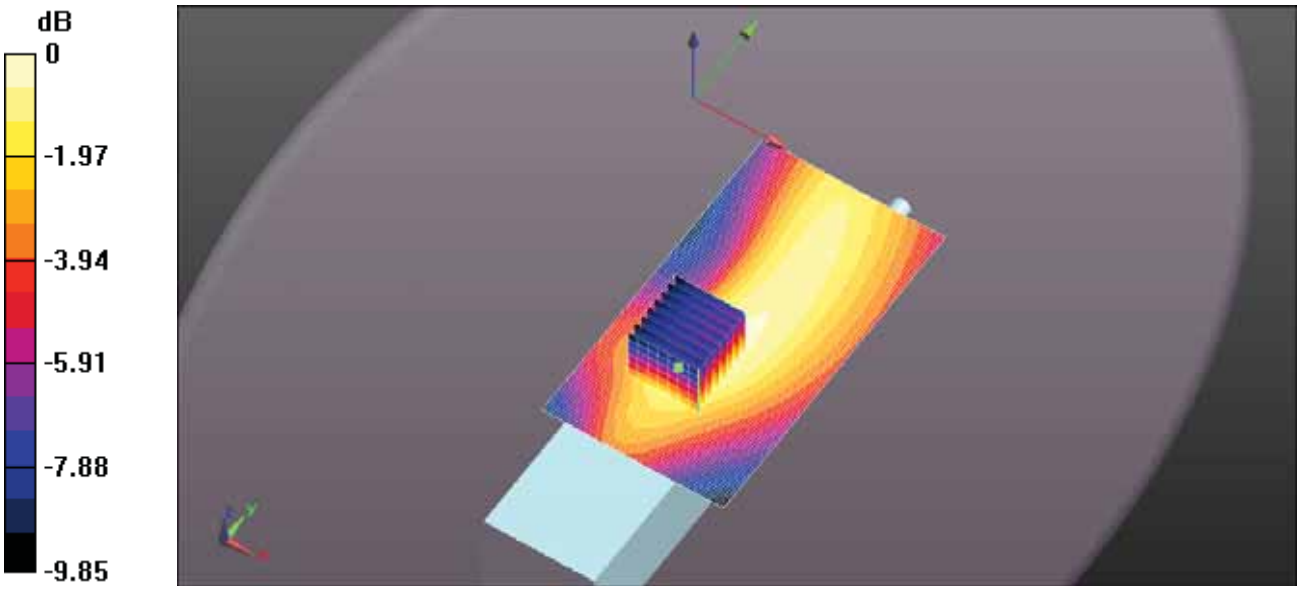

0 dB = 0.625 W/kg = -2.04 dBW/kg

Test Laboratory: Ultratech Group of Labs

FILE NAME: ICOM-489Q BODY FA-SC61VC 133MM 167.7MHZ.DA52:0

DUT: IC-F1100DT; Type: VHF Receiver; Serial: 32000201-0

Communication System: UID 10000, CW; Frequency: 167.7 MHz; Duty Cycle: 1:1
Medium parameters used: f = 168 MHz; σ = 0.845 S/m; ε_r = 64.002; ρ = 1000 kg/m^3 ; Phantom section: Flat Section ; Measurement Standard: DASY5 (IEEE/IEC/ANSI C63.19-2011)

DASY Configuration:

- Probe: ES3DV3 - SN3250; ConvF(7.29, 7.29, 7.29); Calibrated: 3/13/2018;
- Sensor-Surface: 3mm (Mechanical Surface Detection)
- Electronics: DAE4 Sn874; Calibrated: 8/21/2017
- Phantom: ELI 4.0; Type: QD OVA 001 BB; Serial: 1057
- DASY52 52.10.0(1446); SEMCAD X 14.6.10(7417)

Configuration Body for IC-F1100DT/Body Back, P=5W, d=0mm/Zoom Scan (7x7x7) (8x13x7)/Cube 0: Measurement grid: dx=5mm, dy=5mm, dz=5mm
Reference Value = 34.92 V/m; Power Drift = 0.79 dB
Peak SAR (extrapolated) = 1.56 W/kg
SAR(1 g) = 1.04 W/kg; SAR(10 g) = 0.783 W/kg (SAR corrected for target medium)
Maximum value of SAR (measured) = 1.16 W/kg

Configuration Body for IC-F1100DT/Body Back, P=5W, d=0mm/Area Scan (61x111x1):
Interpolated grid: dx=1.500 mm, dy=1.500 mm
Maximum value of SAR (interpolated) = 1.01 W/kg

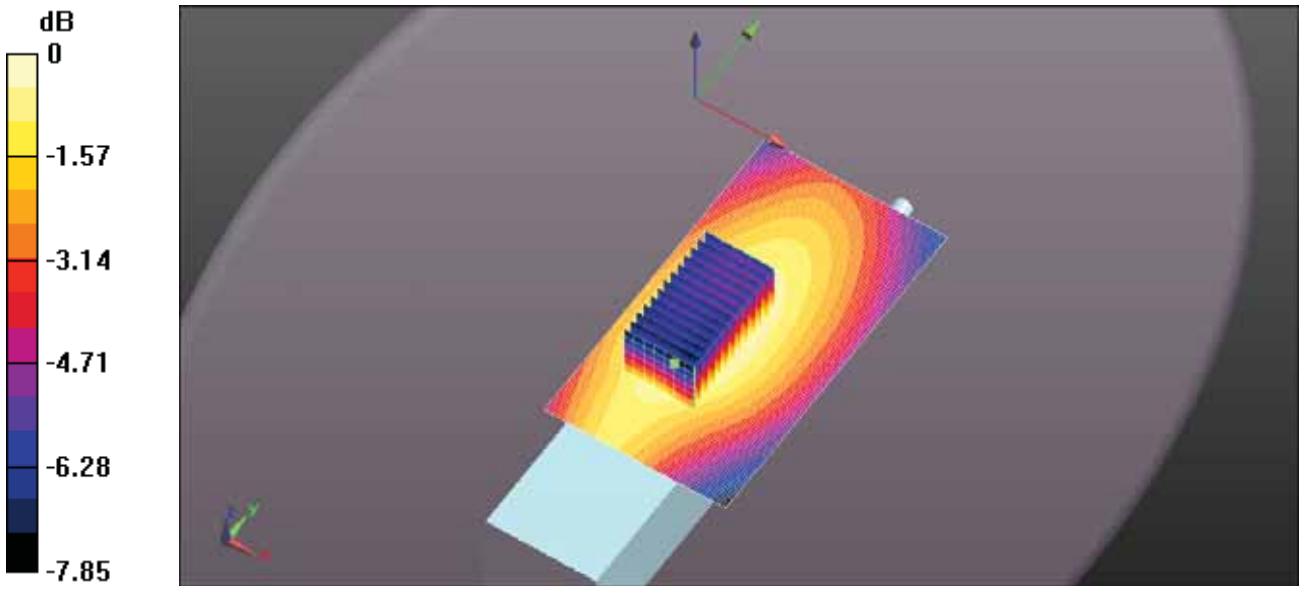

0 dB = 1.16 W/kg = 0.66 dBW/kg

Test Laboratory: Ultratech Group of Labs

FILE NAME: ICOM-489Q BODY FA-SC61VC 133MM 174MHZ.DA52:0

DUT: IC-F1100DT; Type: VHF Receiver; Serial: 32000201-0

Communication System: UID 10000, CW; Frequency: 174 MHz; Duty Cycle: 1:1
Medium parameters used: f = 174 MHz; σ = 0.85 S/m; ε_r = 63.898; ρ = 1000 kg/m^3 ; Phantom section: Flat Section ; Measurement Standard: DASY5 (IEEE/IEC/ANSI C63.19-2011)

DASY Configuration:

- Probe: ES3DV3 - SN3250; ConvF(7.29, 7.29, 7.29); Calibrated: 3/13/2018;
- Sensor-Surface: 3mm (Mechanical Surface Detection)
- Electronics: DAE4 Sn874; Calibrated: 8/21/2017
- Phantom: ELI 4.0; Type: QD OVA 001 BB; Serial: 1057
- DASY52 52.10.0(1446); SEMCAD X 14.6.10(7417)

Configuration Body for IC-F1100DT/Body Back, P=5W, d=0mm/Zoom Scan (7x7x7) (9x13x7)/Cube 0: Measurement grid: dx=5mm, dy=5mm, dz=5mm
Reference Value = 27.12 V/m; Power Drift = 1.04 dB
Peak SAR (extrapolated) = 1.05 W/kg
SAR(1 g) = 0.627 W/kg; SAR(10 g) = 0.461 W/kg (SAR corrected for target medium)
Maximum value of SAR (measured) = 0.730 W/kg

Configuration Body for IC-F1100DT/Body Back, P=5W, d=0mm/Area Scan (61x111x1):
Interpolated grid: dx=1.500 mm, dy=1.500 mm
Maximum value of SAR (interpolated) = 0.651 W/kg

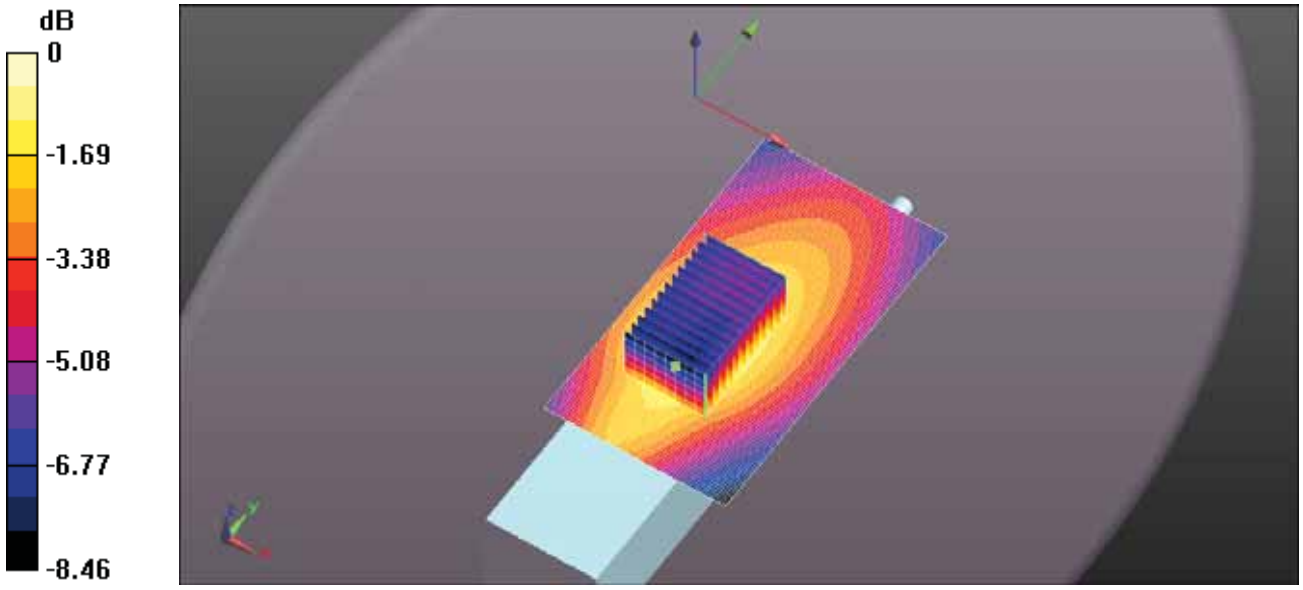

0 dB = 0.730 W/kg = -1.37 dBW/kg