APPENDIX 1

SAR Measurement Data

3000 Bristol Circle, Oakville, Ontario, Canada L6H 6G4
Tel. #: 905-829-1570, Fax. #: 905-829-8050, Email: vic@ultratech-labs.com, Website: http://www.ultratech-labs.com

TABLE OF CONTENTS

EXHIBIT 1. SYSTEM VERIFICATION 3
EXHIBIT 2. PRESCAN 8
EXHIBIT 3. HEAD SAR MEASUREMENT 22
EXHIBIT 4. BODY SAR MEASUREMENT 64

EXHIBIT 1. SYSTEM VERIFICATION

	Type		SAR1g			SAR10g		
		Frequency (MHz)	Reference (W/kg)	Measured	Delta %	Reference (W/kg)	Measured	Delta %
	Head	450	1.16	1.16	0.00%	0.771	0.773	0.26%
	Body	450	1.16	1.13	-2.59%	0.779	0.744	-4.49%
Bluetooth	Body	2450	12.7	12.4	-2.36%	6.03	6.28	4.15%
	Head	2450	13.3	13	-2.26%	6.26	6.15	-1.76%

3000 Bristol Circle, Oakville, Ontario, Canada L6H 6G4
Tel. #: 905-829-1570, Fax. #: 905-829-8050, Email: vic@ultratech-labs.com, Website: http://www.ultratech-labs.com

File Name: Head verification for 640QR2 at 450 Mhz 3250 probe 4Mar26.da52:0

DUT: D450V3 - SN1063; Type: D450V3; Serial: SN1063

Communication System: UID 0, CW (0); Frequency: 450 MHz; Duty Cycle: 1:1
Medium parameters used: f = 450 MHz; σ = 0.842 S/m; ε_r = 43.326; ρ = 1000 kg/m^3 ; Phantom section: Flat Section ; Measurement Standard: DASY5 (IEEE/IEC/ANSI C63.19-2007)

DASY Configuration:

- Probe: ES3DV3 - SN3250; ConvF(7.06, 7.06, 7.06); Calibrated: 3/10/2025;
- Sensor-Surface: 3mm (Mechanical Surface Detection)
- Electronics: DAE4 Sn874; Calibrated: 7/29/2025
- Phantom: ELI 4.0; Type: QD OVA 001 BB; Serial: 1057
- DASY52 52.10.0(1446); SEMCAD X 14.6.10(7417)

System verification Head Icom 640 at 450 Mhz 3250 probe 4Mar26/d=15mm, Pin=250mW, dist=1.4mm (EX-Probe)/Area Scan (61x81x1): Interpolated grid: dx=1.500 mm, dy=1.500 mm
Maximum value of SAR (interpolated) = 1.32 W/kg
System verification Head Icom 640 at 450 Mhz 3250 probe 4Mar26/d=15mm, Pin=250mW, dist=1.4mm (EX-Probe)/Zoom Scan (7x7x7) (7x7x7)/Cube 0: Measurement grid: dx=5mm, dy=5mm, dz=5mm
Reference Value = 34.06 V/m; Power Drift = 0.06 dB
Peak SAR (extrapolated) = 1.79 W/kg
SAR(1 g) = 1.16 W/kg; SAR(10 g) = 0.773 W/kg (SAR corrected for target medium)
Maximum value of SAR (measured) = 1.32 W/kg

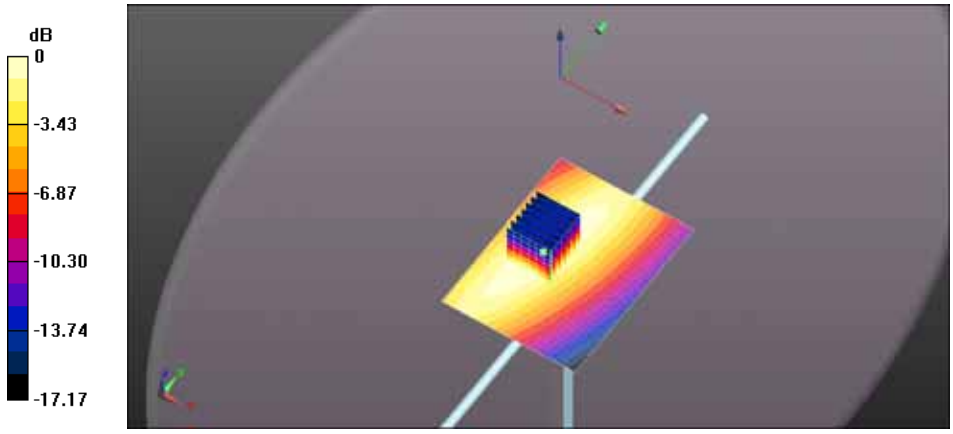

0 dB = 1.32 W/kg = 1.20 dBW/kg

File Name: Body verification for 640QR2 at 450 Mhz 3250 probe 23Feb26.da52:0

DUT: D450V3 - SN1063; Type: D450V3; Serial: SN1063

Communication System: UID 0, CW (0); Frequency: 450 MHz; Duty Cycle: 1:1
Medium parameters used: f = 450 MHz; σ = 0.934 S/m; ε_r = 55.576; ρ = 1000 kg/m^3 ; Phantom section: Flat Section ; Measurement Standard: DASY5 (IEEE/IEC/ANSI C63.19-2007)

DASY Configuration:

- Probe: ES3DV3 - SN3250; ConvF(7.12, 7.12, 7.12); Calibrated: 3/10/2025;
- Sensor-Surface: 3mm (Mechanical Surface Detection)
- Electronics: DAE4 Sn874; Calibrated: 7/29/2025
- Phantom: ELI 4.0; Type: QD OVA 001 BB; Serial: 1057
- DASY52 52.10.0(1446); SEMCAD X 14.6.10(7417)

System verification Icom 640 at 450 Mhz 3250 probe 23Feb26/d=15mm, Pin=250mW, dist=1.4mm (EX-Probe)/Area Scan (61x81x1): Interpolated grid: dx=1.500 mm, dy=1.500 mm
Maximum value of SAR (interpolated) = 1.29 W/kg
System verification Icom 640 at 450 Mhz 3250 probe 23Feb26/d=15mm, Pin=250mW, dist=1.4mm (EX-Probe)/Zoom Scan (7x7x7) (7x7x7)/Cube 0: Measurement grid: dx=5mm, dy=5mm, dz=5mm
Reference Value = 32.83 V/m; Power Drift = 0.06 dB
Peak SAR (extrapolated) = 1.83 W/kg
SAR(1 g) = 1.13 W/kg; SAR(10 g) = 0.744 W/kg (SAR corrected for target medium)
Maximum value of SAR (measured) = 1.32 W/kg

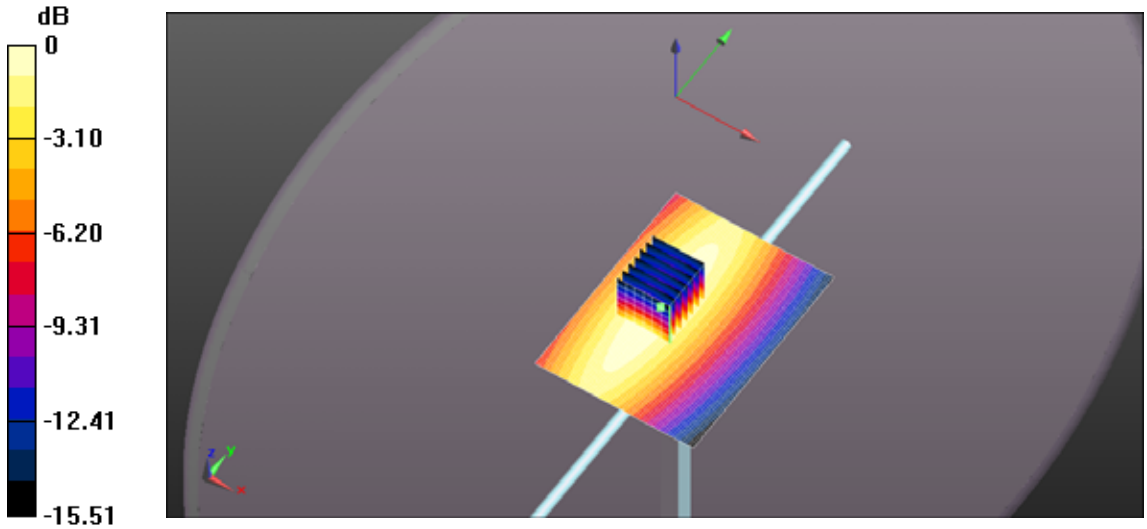

0 dB = 1.29 W/kg = 1.11 dBW/kg

File Name: System Verification - 2450MHz_Head(ICOM-640) Final.da52:0

DUT: D2450V2 - SN821; Type: D2450V2; Serial: SN821

Communication System: UID 0, CW (0); Frequency: 2450 MHz; Duty Cycle: 1:1
Medium parameters used: f = 2450 MHz; σ = 1.862 S/m; ε_r = 37.628; ρ = 1000 kg/m^3 ; Phantom section: Flat Section ; Measurement Standard: DASY5 (IEEE/IEC/ANSI C63.19-2011)

DASY Configuration:

- Probe: ES3DV3 - SN3250; ConvF(4.65, 4.51, 4.43); Calibrated: 3/10/2025;
- Sensor-Surface: 3mm (Mechanical Surface Detection)
- Electronics: DAE4 Sn874; Calibrated: 7/29/2025
- Phantom: ELI 4.0; Type: QD OVA 001 BB; Serial: 1057
- DASY52 52.10.0(1446); SEMCAD X 14.6.10(7417)

System Verification at 2.45GHz_Head/d=10mm, Pin=250mW, dist=1.4mm (EX-Probe)/Zoom Scan (7x7x7) (7x7x7)/Cube 0: Measurement grid: dx=5mm, dy=5mm, dz=5mm
Reference Value = 98.72 V/m; Power Drift = -0.06 dB
Peak SAR (extrapolated) = 24.0 W/kg
SAR(1 g) = 12.7 W/kg; SAR(10 g) = 6.33 W/kg
Maximum value of SAR (measured) = 16.1 W/kg
System Verification at 2.45GHz_Head/d=10mm, Pin=250mW, dist=1.4mm (EX-Probe)/Area Scan (61x81x1): Interpolated grid: dx=1.500 mm, dy=1.500 mm
Maximum value of SAR (interpolated) = 16.9 W/kg

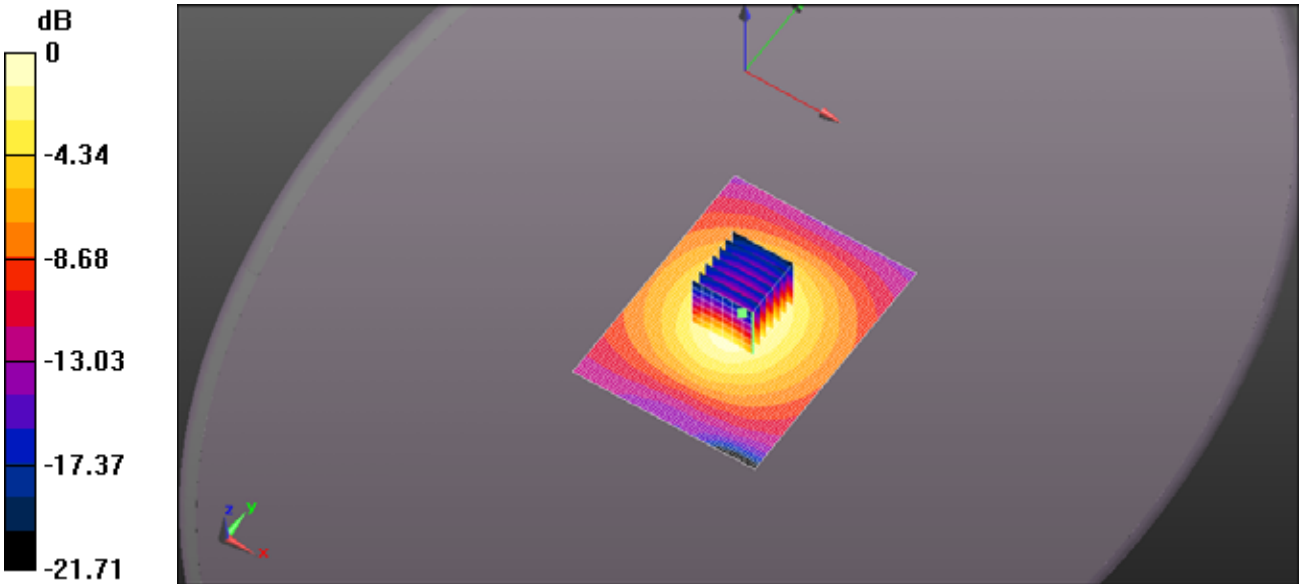

0 dB = 16.1 W/kg = 12.08 dBW/kg

File Name: System Verification - 2450MHz_Body(ICOM-640) Final.da52:0

DUT: D2450V2 - SN821; Type: D2450V2; Serial: SN821

Communication System: UID 0, CW (0); Frequency: 2450 MHz; Duty Cycle: 1:1
Medium parameters used: f = 2450 MHz; σ = 1.956 S/m; ε_r = 50.706; ρ = 1000 kg/m^3 ; Phantom section: Flat Section ; Measurement Standard: DASY5 (IEEE/IEC/ANSI C63.19-2011)

DASY Configuration:

- Probe: ES3DV3 - SN3250; ConvF(4.65, 4.41, 4.33); Calibrated: 3/10/2025;
- Sensor-Surface: 3mm (Mechanical Surface Detection)
- Electronics: DAE4 Sn874; Calibrated: 7/29/2025
- Phantom: ELI 4.0; Type: QD OVA 001 BB; Serial: 1057
- DASY52 52.10.0(1446); SEMCAD X 14.6.10(7417)

System Verification at 2.45GHz_Body/d=10mm, Pin=250mW, dist=1.4mm (EX-Probe)/Zoom Scan (7x7x7) (7x7x7)/Cube 0: Measurement grid: dx=5mm, dy=5mm, dz=5mm
Reference Value = 78.04 V/m; Power Drift = 0.34 dB
Peak SAR (extrapolated) = 24.1 W/kg
SAR(1 g) = 12.4 W/kg; SAR(10 g) = 6.28 W/kg
Maximum value of SAR (measured) = 15.7 W/kg
System Verification at 2.45GHz_Body/d=10mm, Pin=250mW, dist=1.4mm (EX-Probe)/Area Scan (61x81x1): Interpolated grid: dx=1.500 mm, dy=1.500 mm
Maximum value of SAR (interpolated) = 16.2 W/kg

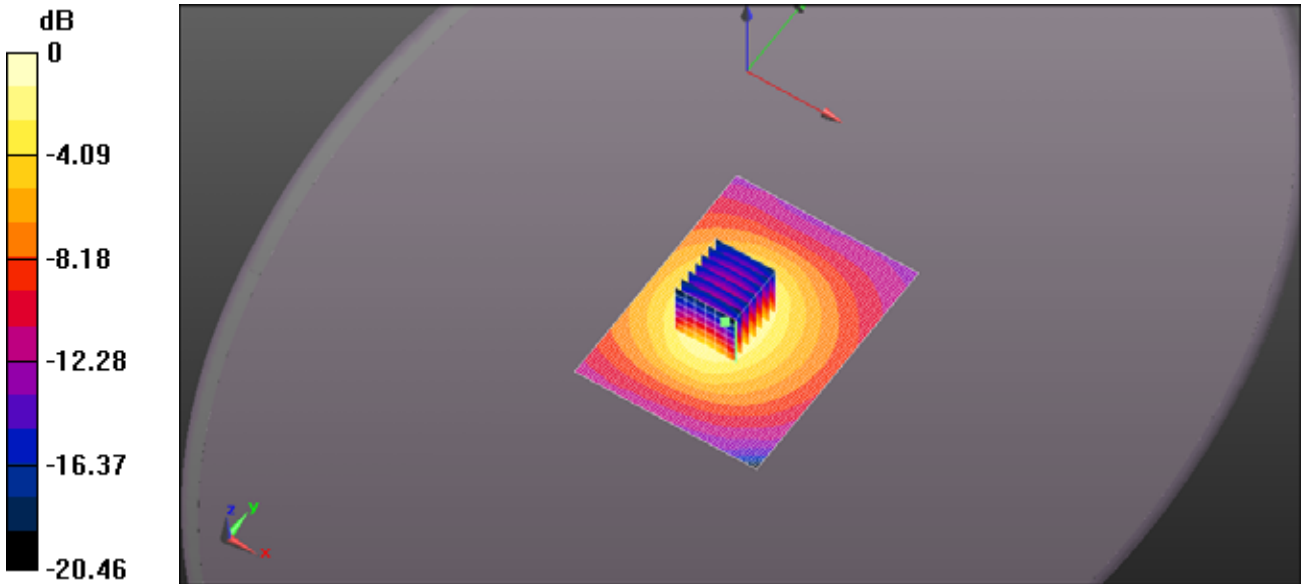

0 dB = 15.7 W/kg = 11.97 dBW/kg

EXHIBIT 2. PRESCAN

Head

Battery	Antenna	Power (W)	CH	CH. Freq (MHz)	HEAD SAR1g (W/Kg)	HEAD SAR10g (W/Kg)	Power Drift (dB)
BP-303N	FA-S76UC 460MHz	4.53	15	460	3.96	2.94	-0.38
BP-316		4.53	15	460	4.4	3.23	-0.28
BP-305		0.93	15	460	0.582	0.427	-3.86
BP-303		4.53	15	460	3.13	2.32	-0.43

File Name: Prescan ICOM-640 FA-S76UC 460MHz Head BP-303.da52:0

DUT: DUT Sample Brick w. Antenna; Type: Sample; Serial: IMEI Number

Communication System: UID 10000, CW; Frequency: 460 MHz; Duty Cycle: 1:1
Medium parameters used: f = 460 MHz; σ = 0.858 S/m; ε_r = 43.194; ρ = 1000 kg/m^3 ; Phantom section: Flat Section ; Measurement Standard: DASY5 (IEEE/IEC/ANSI C63.19-2007)

DASY Configuration:

- Probe: ES3DV3 - SN3250; ConvF(7.06, 7.06, 7.06); Calibrated: 3/10/2025;
- Sensor-Surface: 3mm (Mechanical Surface Detection)
- Electronics: DAE4 Sn874; Calibrated: 7/29/2025
- Phantom: ELI 4.0; Type: QD OVA 001 BB; Serial: 1057
- DASY52 52.10.0(1446); SEMCAD X 14.6.10(7417)

ICOM 640 460 MHz Head Prescan BP303/Head - d=25mm, Pin=5W (ES-Probe)/Area Scan (41x161x1): Interpolated grid: dx=1.500 mm, dy=1.500 mm
Maximum value of SAR (interpolated) = 3.65 W/kg
ICOM 640 460 MHz Head Prescan BP303/Head - d=25mm, Pin=5W (ES-Probe)/Zoom Scan (5x5x7) (6x5x7)/Cube 0: Measurement grid: dx=7.5mm, dy=7.5mm, dz=5mm
Reference Value = 59.71 V/m; Power Drift = -0.43 dB
Peak SAR (extrapolated) = 4.43 W/kg
SAR(1 g) = 3.13 W/kg; SAR(10 g) = 2.32 W/kg (SAR corrected for target medium)
Maximum value of SAR (measured) = 3.50 W/kg

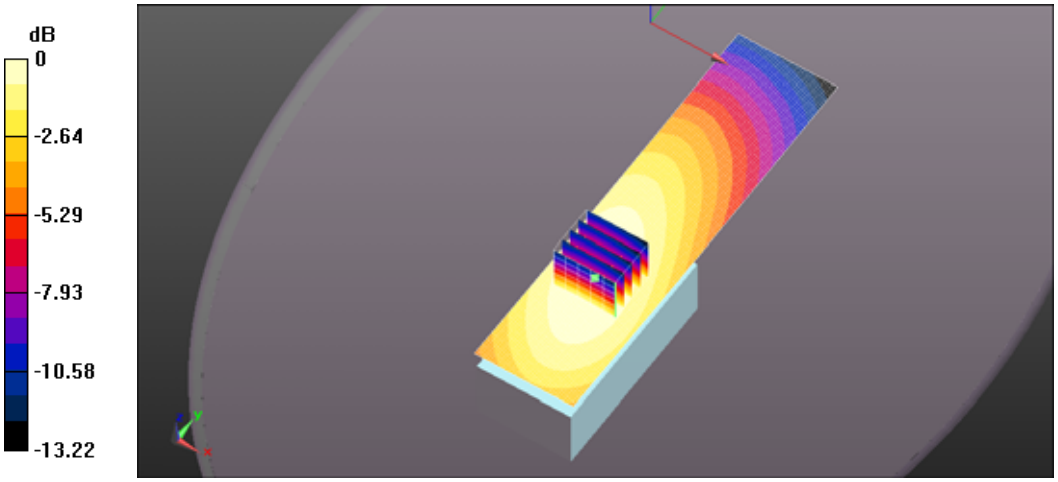

0 dB = 3.65 W/kg = 5.63 dBW/kg

File Name: Prescan ICOM-640 FA-S76UC 460MHz Head BP-303N.da52:0

DUT: DUT Sample Brick w. Antenna; Type: Sample; Serial: IMEI Number

Communication System: UID 10000, CW; Frequency: 460 MHz; Duty Cycle: 1:1
Medium parameters used: f = 460 MHz; σ = 0.858 S/m; ε_r = 43.194; ρ = 1000 kg/m^3 ; Phantom section: Flat Section ; Measurement Standard: DASY5 (IEEE/IEC/ANSI C63.19-2007)

DASY Configuration:

- Probe: ES3DV3 - SN3250; ConvF(7.06, 7.06, 7.06); Calibrated: 3/10/2025;
- Sensor-Surface: 3mm (Mechanical Surface Detection)
- Electronics: DAE4 Sn874; Calibrated: 7/29/2025
- Phantom: ELI 4.0; Type: QD OVA 001 BB; Serial: 1057
- DASY52 52.10.0(1446); SEMCAD X 14.6.10(7417)

ICOM 640 460 MHz Head Prescan BP303N/Head - d=25mm, Pin=5W (ES-Probe)/Area Scan (41x161x1): Interpolated grid: dx=1.500 mm, dy=1.500 mm
Maximum value of SAR (interpolated) = 4.65 W/kg
ICOM 640 460 MHz Head Prescan BP303N/Head - d=25mm, Pin=5W (ES-Probe)/Zoom Scan (5x5x7) (6x6x7)/Cube 0: Measurement grid: dx=7.5mm, dy=7.5mm, dz=5mm
Reference Value = 69.76 V/m; Power Drift = -0.38 dB
Peak SAR (extrapolated) = 5.59 W/kg
SAR(1 g) = 3.96 W/kg; SAR(10 g) = 2.94 W/kg (SAR corrected for target medium)
Maximum value of SAR (measured) = 4.43 W/kg

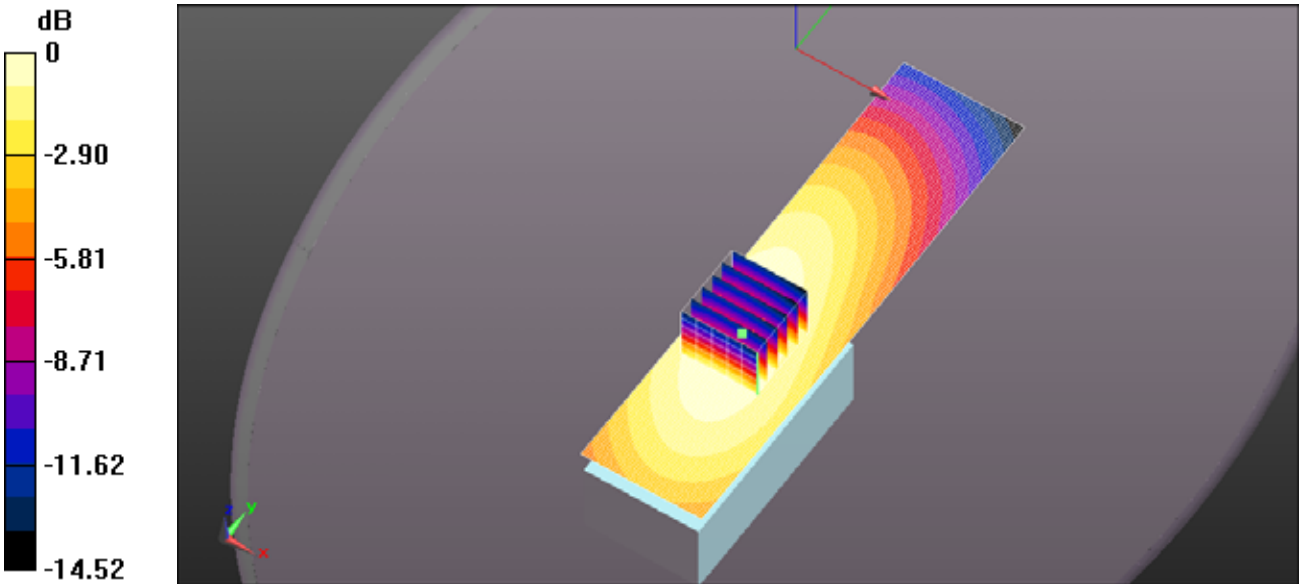

0 dB = 4.65 W/kg = 6.68 dBW/kg

File Name: Prescan ICOM-640 FA-S76UC 460MHz Head BP-305.da52:0

DUT: DUT Sample Brick w. Antenna; Type: Sample; Serial: IMEI Number

Communication System: UID 10000, CW; Frequency: 460 MHz; Duty Cycle: 1:1
Medium parameters used: f = 460 MHz; σ = 0.858 S/m; ε_r = 43.194; ρ = 1000 kg/m^3 ; Phantom section: Flat Section ; Measurement Standard: DASY5 (IEEE/IEC/ANSI C63.19-2007)

DASY Configuration:

- Probe: ES3DV3 - SN3250; ConvF(7.06, 7.06, 7.06); Calibrated: 3/10/2025;
- Sensor-Surface: 3mm (Mechanical Surface Detection)
- Electronics: DAE4 Sn874; Calibrated: 7/29/2025
- Phantom: ELI 4.0; Type: QD OVA 001 BB; Serial: 1057
- DASY52 52.10.0(1446); SEMCAD X 14.6.10(7417)

ICOM 640 460 MHz Head Prescan BP305/Head - d=25mm, Pin=1W (ES-Probe)/Area Scan (41x161x1): Interpolated grid: dx=1.500 mm, dy=1.500 mm
Maximum value of SAR (interpolated) = 0.959 W/kg
ICOM 640 460 MHz Head Prescan BP305/Head - d=25mm, Pin=1W (ES-Probe)/Zoom Scan (5x5x7) (6x5x7)/Cube 0: Measurement grid: dx=7.5mm, dy=7.5mm, dz=5mm
Reference Value = 39.02 V/m; Power Drift = -3.86 dB
Peak SAR (extrapolated) = 0.848 W/kg
SAR(1 g) = 0.582 W/kg; SAR(10 g) = 0.427 W/kg (SAR corrected for target medium)
Maximum value of SAR (measured) = 0.658 W/kg

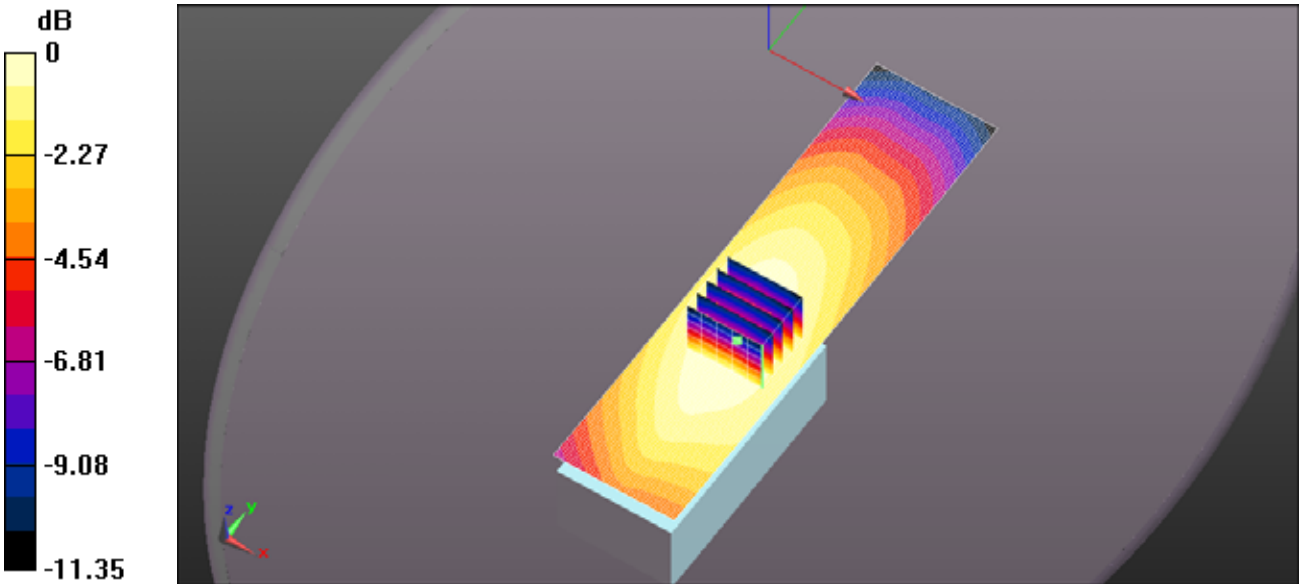

0 dB = 0.959 W/kg = -0.18 dBW/kg

File Name: Prescan ICOM-640 FA-S76UC 460MHz Head BP-316.da52:0

DUT: DUT Sample Brick w. Antenna; Type: Sample; Serial: IMEI Number

Communication System: UID 10000, CW; Frequency: 460 MHz; Duty Cycle: 1:1
Medium parameters used: f = 460 MHz; σ = 0.858 S/m; ε_r = 43.194; ρ = 1000 kg/m^3 ; Phantom section: Flat Section ; Measurement Standard: DASY5 (IEEE/IEC/ANSI C63.19-2007)

DASY Configuration:

- Probe: ES3DV3 - SN3250; ConvF(7.06, 7.06, 7.06); Calibrated: 3/10/2025;
- Sensor-Surface: 3mm (Mechanical Surface Detection)
- Electronics: DAE4 Sn874; Calibrated: 7/29/2025
- Phantom: ELI 4.0; Type: QD OVA 001 BB; Serial: 1057
- DASY52 52.10.0(1446); SEMCAD X 14.6.10(7417)

ICOM 640 460 MHz Head Prescan BP316/Head - d=25mm, Pin=5W (ES-Probe)/Area Scan (41x161x1): Interpolated grid: dx=1.500 mm, dy=1.500 mm
Maximum value of SAR (interpolated) = 5.09 W/kg
ICOM 640 460 MHz Head Prescan BP316/Head - d=25mm, Pin=5W (ES-Probe)/Zoom Scan (5x5x7) (6x5x7)/Cube 0: Measurement grid: dx=7.5mm, dy=7.5mm, dz=5mm
Reference Value = 75.39 V/m; Power Drift = -0.28 dB
Peak SAR (extrapolated) = 6.30 W/kg
SAR(1 g) = 4.4 W/kg; SAR(10 g) = 3.23 W/kg (SAR corrected for target medium)
Maximum value of SAR (measured) = 4.96 W/kg

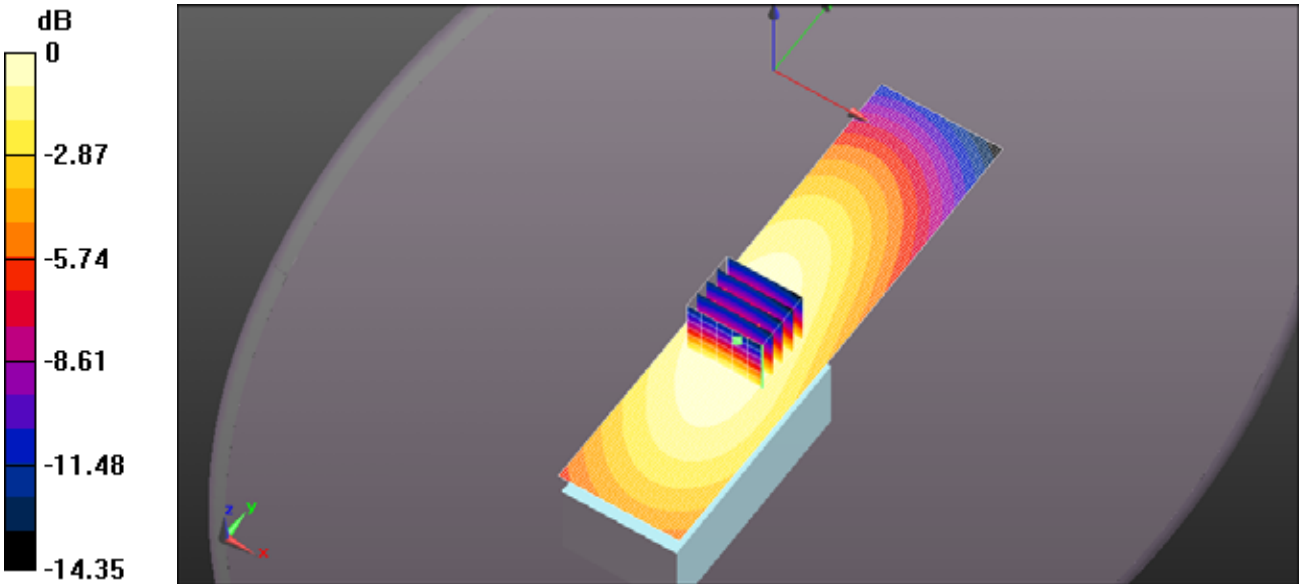

0 dB = 5.09 W/kg = 7.07 dBW/kg

Body Prescan MB133

Battery	Antenna	Power (W)	CH	CH. Freq (MHz)	BODY SAR1g (W/Kg)	BODY SAR10g (W/Kg)	Power Drift (dB)
BP-303N	FA-S76UC 460MHz	4.53	15	460	5.89	4.27	-0.22
BP-316		4.53	15	460	5.59	4.08	-0.34
BP-305		0.93	15	460	1.31	0.946	-1.32
BP-303		4.53	15	460	5.43	3.92	-0.51

Body Prescan MB136

Battery	Antenna	Power (W)	CH	CH. Freq (MHz)	Body SAR1g (W/Kg)	Body SAR10g (W/Kg)	Power Drift (dB)
BP-303N	FA-S76UC 460MHz	4.53	15	460	3.62	2.69	-0.54
BP-316		4.53	15	460	3.22	2.39	-0.28
BP-305		0.93	15	460	0.384	0.288	-3.21
BP-303		4.53	15	460	4.65	3.46	-0.33

File Name: ICOM-640 BP303 SC76UC 460MHz.da52:0

DUT: DUT Sample Brick w. Antenna; Type: Sample; Serial: IMEI Number

Communication System: UID 10000, CW; Frequency: 460 MHz; Duty Cycle: 1:1
Medium parameters used: f = 460 MHz; σ = 0.946 S/m; ε_r = 55.525; ρ = 1000 kg/m^3 ; Phantom section: Flat Section ; Measurement Standard: DASY5 (IEEE/IEC/ANSI C63.19-2007)

DASY Configuration:

- Probe: ES3DV3 - SN3250; ConvF(7.12, 7.12, 7.12); Calibrated: 3/10/2025;
- Sensor-Surface: 3mm (Mechanical Surface Detection)
- Electronics: DAE4 Sn874; Calibrated: 7/29/2025
- Phantom: ELI 4.0; Type: QD OVA 001 BB; Serial: 1057
- DASY52 52.10.0(1446); SEMCAD X 14.6.10(7417)

ICOM 640QR4 460 MHz Body Prescan BP303/Body - Belt Clip Touching, d=0mm, Pin=5W (ES-Probe)/Area Scan (41x161x1): Interpolated grid: dx=1.500 mm, dy=1.500 mm
Maximum value of SAR (interpolated) = 6.37 W/kg
ICOM 640QR4 460 MHz Body Prescan BP303/Body - Belt Clip Touching, d=0mm, Pin=5W (ES-Probe)/Zoom Scan (5x5x7) (6x5x7)/Cube 0: Measurement grid: dx=7.5mm, dy=7.5mm, dz=5mm
Reference Value = 82.50 V/m; Power Drift = -0.51 dB
Peak SAR (extrapolated) = 7.86 W/kg
SAR(1 g) = 5.43 W/kg; SAR(10 g) = 3.92 W/kg (SAR corrected for target medium)
Maximum value of SAR (measured) = 6.12 W/kg

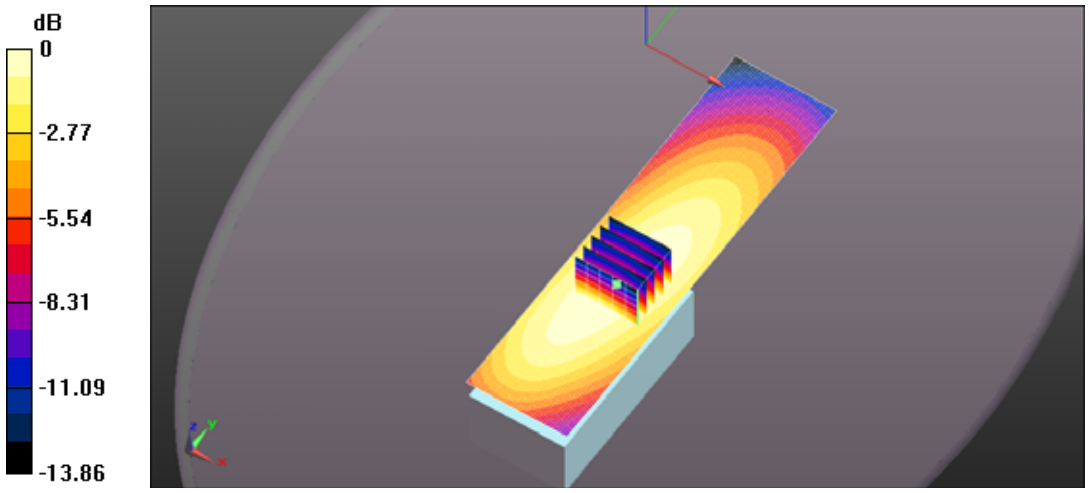

0 dB = 6.37 W/kg = 8.04 dBW/kg

File Name: ICOM-640 BP303N SC76UC 460MHz.da52:0

DUT: DUT Sample Brick w. Antenna; Type: Sample; Serial: IMEI Number

Communication System: UID 10000, CW; Frequency: 460 MHz; Duty Cycle: 1:1
Medium parameters used: f = 460 MHz; σ = 0.946 S/m; ε_r = 55.525; ρ = 1000 kg/m^3 ; Phantom section: Flat Section ; Measurement Standard: DASY5 (IEEE/IEC/ANSI C63.19-2007)

DASY Configuration:

- Probe: ES3DV3 - SN3250; ConvF(7.12, 7.12, 7.12); Calibrated: 3/10/2025;
- Sensor-Surface: 3mm (Mechanical Surface Detection)
- Electronics: DAE4 Sn874; Calibrated: 7/29/2025
- Phantom: ELI 4.0; Type: QD OVA 001 BB; Serial: 1057
- DASY52 52.10.0(1446); SEMCAD X 14.6.10(7417)

ICOM 640QR4 460 MHz Body Prescan BP303N/Body - Belt Clip Touching, d=0mm, Pin=5W (ES-Probe)/Area Scan (41x161x1): Interpolated grid: dx=1.500 mm, dy=1.500 mm
Maximum value of SAR (interpolated) = 6.81 W/kg
ICOM 640QR4 460 MHz Body Prescan BP303N/Body - Belt Clip Touching, d=0mm, Pin=5W (ES-Probe)/Zoom Scan (5x5x7) (6x5x7)/Cube 0: Measurement grid: dx=7.5mm, dy=7.5mm, dz=5mm
Reference Value = 85.78 V/m; Power Drift = -0.22 dB
Peak SAR (extrapolated) = 8.53 W/kg
SAR(1 g) = 5.89 W/kg; SAR(10 g) = 4.27 W/kg (SAR corrected for target medium)
Maximum value of SAR (measured) = 6.65 W/kg

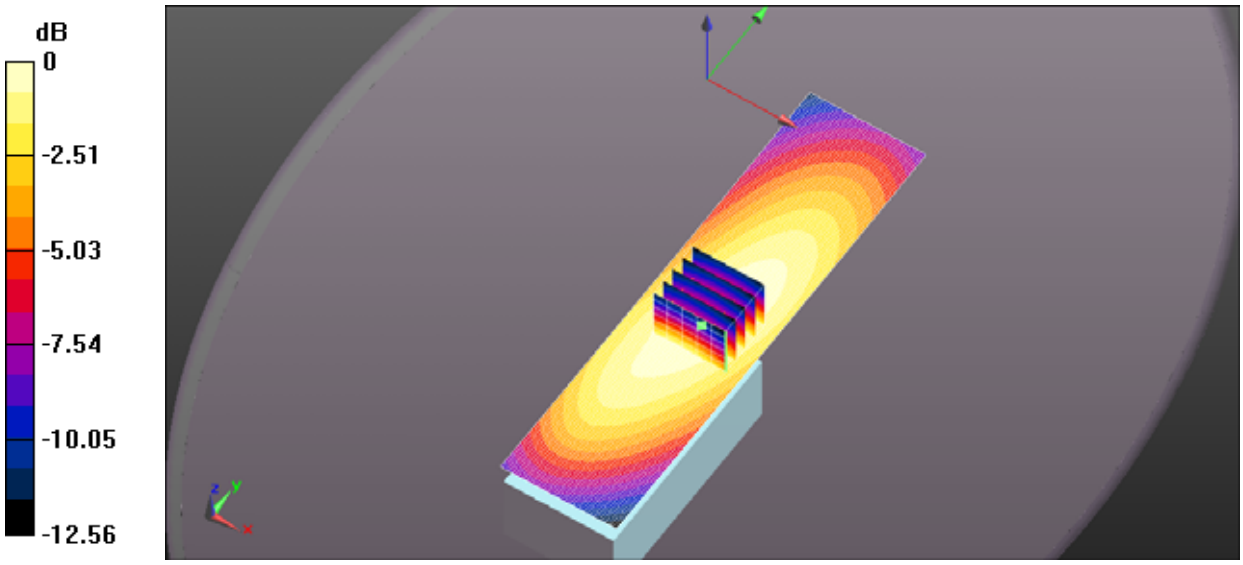

0 dB = 6.81 W/kg = 8.33 dBW/kg

File Name: ICOM-640 BP305 SC76UC 460MHz.da52:0

DUT: DUT Sample Brick w. Antenna; Type: Sample; Serial: IMEI Number

Communication System: UID 10000, CW; Frequency: 460 MHz; Duty Cycle: 1:1
Medium parameters used: f = 460 MHz; σ = 0.946 S/m; ε_r = 55.525; ρ = 1000 kg/m^3 ; Phantom section: Flat Section ; Measurement Standard: DASY5 (IEEE/IEC/ANSI C63.19-2007)

DASY Configuration:

- Probe: ES3DV3 - SN3250; ConvF(7.12, 7.12, 7.12); Calibrated: 3/10/2025;
- Sensor-Surface: 3mm (Mechanical Surface Detection)
- Electronics: DAE4 Sn874; Calibrated: 7/29/2025
- Phantom: ELI 4.0; Type: QD OVA 001 BB; Serial: 1057
- DASY52 52.10.0(1446); SEMCAD X 14.6.10(7417)

ICOM 640QR4 460 MHz Body Prescan BP305/Body - Belt Clip Touching, d=0mm, Pin=1W (ES-Probe)/Area Scan (41x161x1): Interpolated grid: dx=1.500 mm, dy=1.500 mm
Maximum value of SAR (interpolated) = 1.56 W/kg
ICOM 640QR4 460 MHz Body Prescan BP305/Body - Belt Clip Touching, d=0mm, Pin=1W (ES-Probe)/Zoom Scan (5x5x7) (7x6x7)/Cube 0: Measurement grid: dx=7.5mm, dy=7.5mm, dz=5mm
Reference Value = 43.39 V/m; Power Drift = -1.33 dB
Peak SAR (extrapolated) = 1.87 W/kg
SAR(1 g) = 1.31 W/kg; SAR(10 g) = 0.946 W/kg (SAR corrected for target medium)
Maximum value of SAR (measured) = 1.47 W/kg

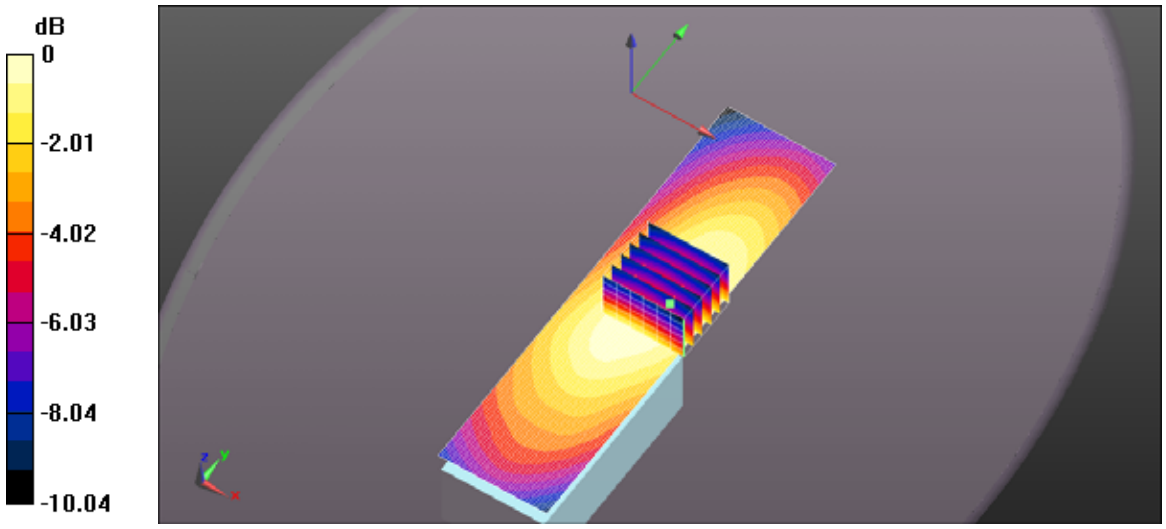

0 dB = 1.56 W/kg = 1.94 dBW/kg

File Name: ICOM-640 BP316 SC76UC 460MHz.da52:0

DUT: DUT Sample Brick w. Antenna; Type: Sample; Serial: IMEI Number

Communication System: UID 10000, CW; Frequency: 460 MHz; Duty Cycle: 1:1
Medium parameters used: f = 460 MHz; σ = 0.946 S/m; ε_r = 55.525; ρ = 1000 kg/m^3 ; Phantom section: Flat Section ; Measurement Standard: DASY5 (IEEE/IEC/ANSI C63.19-2007)

DASY Configuration:

- Probe: ES3DV3 - SN3250; ConvF(7.12, 7.12, 7.12); Calibrated: 3/10/2025;
- Sensor-Surface: 3mm (Mechanical Surface Detection)
- Electronics: DAE4 Sn874; Calibrated: 7/29/2025
- Phantom: ELI 4.0; Type: QD OVA 001 BB; Serial: 1057
- DASY52 52.10.0(1446); SEMCAD X 14.6.10(7417)

ICOM 640QR4 460 MHz Body Prescan BP316/Body - Belt Clip Touching, d=0mm, Pin=5W (ES-Probe)/Area Scan (41x161x1): Interpolated grid: dx=1.500 mm, dy=1.500 mm
Maximum value of SAR (interpolated) = 6.41 W/kg
ICOM 640QR4 460 MHz Body Prescan BP316/Body - Belt Clip Touching, d=0mm, Pin=5W (ES-Probe)/Zoom Scan (5x5x7) (6x5x7)/Cube 0: Measurement grid: dx=7.5mm, dy=7.5mm, dz=5mm
Reference Value = 83.90 V/m; Power Drift = -0.34 dB
Peak SAR (extrapolated) = 8.04 W/kg
SAR(1 g) = 5.59 W/kg; SAR(10 g) = 4.08 W/kg (SAR corrected for target medium)
Maximum value of SAR (measured) = 6.27 W/kg

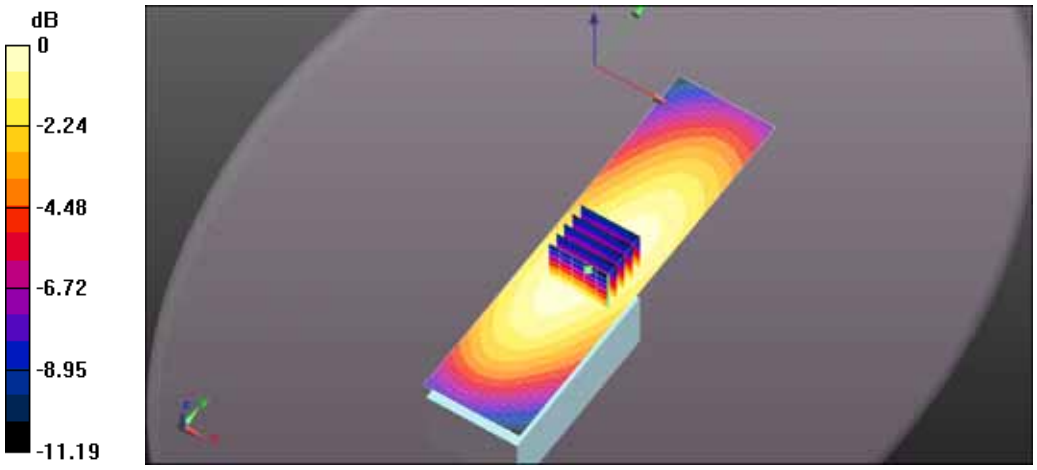

0 dB = 6.41 W/kg = 8.07 dBW/kg

Belt clip MB133 File Name: MB133 ICOM-640 BP303 SC76UC 460MHz.da52:0

DUT: DUT Sample Brick w. Antenna; Type: Sample; Serial: IMEI Number

Communication System: UID 10000, CW; Frequency: 460 MHz; Duty Cycle: 1:1
Medium parameters used: f = 460 MHz; σ = 0.946 S/m; ε_r = 55.525; ρ = 1000 kg/m^3 ; Phantom section: Flat Section ; Measurement Standard: DASY5 (IEEE/IEC/ANSI C63.19-2007)

DASY Configuration:

- Probe: ES3DV3 - SN3250; ConvF(7.12, 7.12, 7.12); Calibrated: 3/10/2025;
- Sensor-Surface: 3mm (Mechanical Surface Detection)
- Electronics: DAE4 Sn874; Calibrated: 7/29/2025
- Phantom: ELI 4.0; Type: QD OVA 001 BB; Serial: 1057
- DASY52 52.10.0(1446); SEMCAD X 14.6.10(7417)

ICOM 640QR4 460 MHz Body Prescan BP303 MB133/Body - Belt Clip Touching, d=0mm, Pin=5W (ES-Probe)/Area Scan (41x161x1): Interpolated grid: dx=1.500 mm, dy=1.500 mm
Maximum value of SAR (interpolated) = 5.40 W/kg
ICOM 640QR4 460 MHz Body Prescan BP303 MB133/Body - Belt Clip Touching, d=0mm, Pin=5W (ES-Probe)/Zoom Scan (5x5x7) (6x5x7)/Cube 0: Measurement grid: dx=7.5mm, dy=7.5mm, dz=5mm
Reference Value = 74.90 V/m; Power Drift = -0.33 dB
Peak SAR (extrapolated) = 6.70 W/kg
SAR(1 g) = 4.65 W/kg; SAR(10 g) = 3.46 W/kg (SAR corrected for target medium)
Maximum value of SAR (measured) = 5.19 W/kg

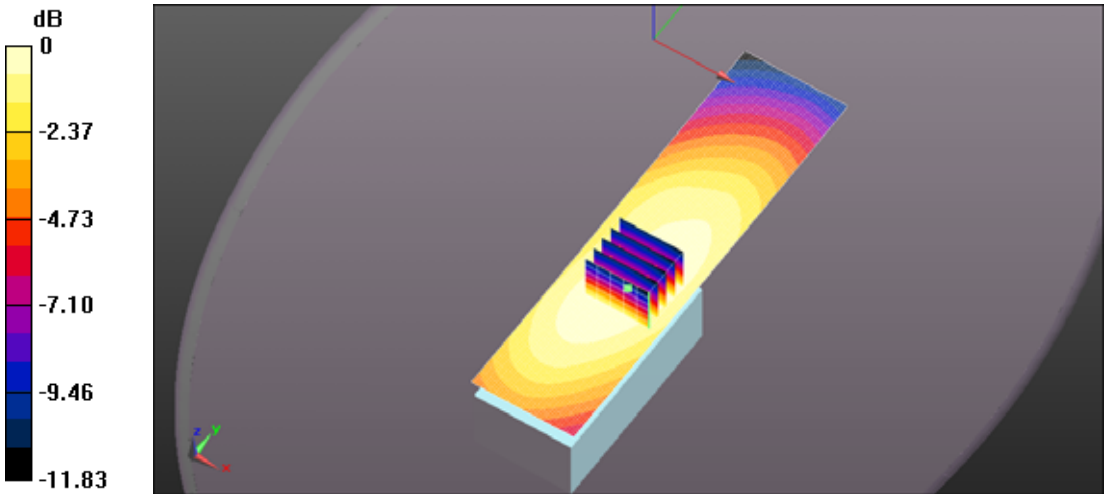

0 dB = 5.40 W/kg = 7.32 dBW/kg

File Name: MB133 ICOM-640 BP303N SC76UC 460MHz.da52:0

DUT: DUT Sample Brick w. Antenna; Type: Sample; Serial: IMEI Number

Communication System: UID 10000, CW; Frequency: 460 MHz; Duty Cycle: 1:1
Medium parameters used: f = 460 MHz; σ = 0.946 S/m; ε_r = 55.525; ρ = 1000 kg/m^3 ; Phantom section: Flat Section ; Measurement Standard: DASY5 (IEEE/IEC/ANSI C63.19-2007)

DASY Configuration:

- Probe: ES3DV3 - SN3250; ConvF(7.12, 7.12, 7.12); Calibrated: 3/10/2025;
- Sensor-Surface: 3mm (Mechanical Surface Detection)
- Electronics: DAE4 Sn874; Calibrated: 7/29/2025
- Phantom: ELI 4.0; Type: QD OVA 001 BB; Serial: 1057
- DASY52 52.10.0(1446); SEMCAD X 14.6.10(7417)

ICOM 640QR4 460 MHz Body Prescan BP303N MB133/Body - Belt Clip Touching, d=0mm, Pin=5W (ES-Probe)/Area Scan (41x161x1): Interpolated grid: dx=1.500 mm, dy=1.500 mm
Maximum value of SAR (interpolated) = 4.15 W/kg
ICOM 640QR4 460 MHz Body Prescan BP303N MB133/Body - Belt Clip Touching, d=0mm, Pin=5W (ES-Probe)/Zoom Scan (5x5x7) (6x5x7)/Cube 0: Measurement grid: dx=7.5mm, dy=7.5mm, dz=5mm
Reference Value = 66.79 V/m; Power Drift = -0.50 dB
Peak SAR (extrapolated) = 5.13 W/kg
SAR(1 g) = 3.62 W/kg; SAR(10 g) = 2.69 W/kg (SAR corrected for target medium)
Maximum value of SAR (measured) = 4.05 W/kg

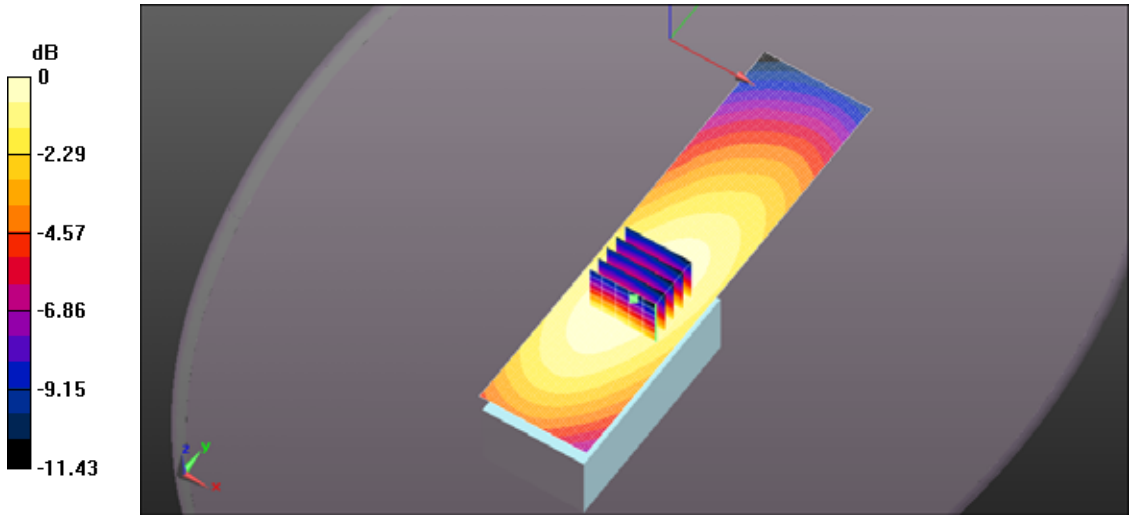

0 dB = 4.15 W/kg = 6.18 dBW/kg

File Name: MB133 ICOM-640 BP305 SC76UC 460MHz.da52:0

DUT: DUT Sample Brick w. Antenna; Type: Sample; Serial: IMEI Number

Communication System: UID 10000, CW; Frequency: 460 MHz; Duty Cycle: 1:1
Medium parameters used: f = 460 MHz; σ = 0.946 S/m; ε_r = 55.525; ρ = 1000 kg/m^3 ; Phantom section: Flat Section ; Measurement Standard: DASY5 (IEEE/IEC/ANSI C63.19-2007)

DASY Configuration:

- Probe: ES3DV3 - SN3250; ConvF(7.12, 7.12, 7.12); Calibrated: 3/10/2025;
- Sensor-Surface: 3mm (Mechanical Surface Detection)
- Electronics: DAE4 Sn874; Calibrated: 7/29/2025
- Phantom: ELI 4.0; Type: QD OVA 001 BB; Serial: 1057
- DASY52 52.10.0(1446); SEMCAD X 14.6.10(7417)

ICOM 640QR4 460 MHz Body Prescan BP305 MB133/Body - Belt Clip Touching, d=0mm, Pin=1W (ES-Probe)/Area Scan (41x161x1): Interpolated grid: dx=1.500 mm, dy=1.500 mm
Maximum value of SAR (interpolated) = 0.526 W/kg
ICOM 640QR4 460 MHz Body Prescan BP305 MB133/Body - Belt Clip Touching, d=0mm, Pin=1W (ES-Probe)/Zoom Scan (5x5x7) (6x6x7)/Cube 0: Measurement grid: dx=7.5mm, dy=7.5mm, dz=5mm
Reference Value = 29.45 V/m; Power Drift = -3.21 dB
Peak SAR (extrapolated) = 0.542 W/kg
SAR(1 g) = 0.384 W/kg; SAR(10 g) = 0.288 W/kg (SAR corrected for target medium)
Maximum value of SAR (measured) = 0.426 W/kg

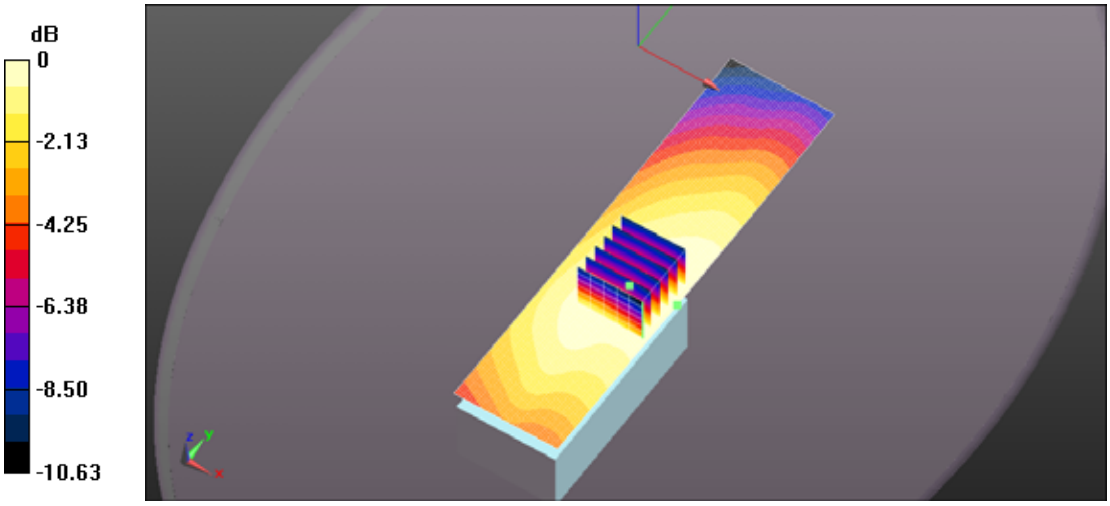

0 dB = 0.526 W/kg = -2.79 dBW/kg

File Name: MB133 ICOM-640 BP316 SC76UC 460MHz.da52:0

DUT: DUT Sample Brick w. Antenna; Type: Sample; Serial: IMEI Number

Communication System: UID 10000, CW; Frequency: 460 MHz; Duty Cycle: 1:1
Medium parameters used: f = 460 MHz; σ = 0.946 S/m; ε_r = 55.525; ρ = 1000 kg/m^3 ; Phantom section: Flat Section ; Measurement Standard: DASY5 (IEEE/IEC/ANSI C63.19-2007)

DASY Configuration:

- Probe: ES3DV3 - SN3250; ConvF(7.12, 7.12, 7.12); Calibrated: 3/10/2025;
- Sensor-Surface: 3mm (Mechanical Surface Detection)
- Electronics: DAE4 Sn874; Calibrated: 7/29/2025
- Phantom: ELI 4.0; Type: QD OVA 001 BB; Serial: 1057
- DASY52 52.10.0(1446); SEMCAD X 14.6.10(7417)

ICOM 640QR4 460 MHz Body Prescan BP316 MB133/Body - Belt Clip Touching, d=0mm, Pin=5W (ES-Probe)/Area Scan (41x161x1): Interpolated grid: dx=1.500 mm, dy=1.500 mm
Maximum value of SAR (interpolated) = 3.90 W/kg
ICOM 640QR4 460 MHz Body Prescan BP316 MB133/Body - Belt Clip Touching, d=0mm, Pin=5W (ES-Probe)/Zoom Scan (5x5x7) (6x5x7)/Cube 0: Measurement grid: dx=7.5mm, dy=7.5mm, dz=5mm
Reference Value = 62.59 V/m; Power Drift = -0.54 dB
Peak SAR (extrapolated) = 4.59 W/kg
SAR(1 g) = 3.22 W/kg; SAR(10 g) = 2.39 W/kg (SAR corrected for target medium)
Maximum value of SAR (measured) = 3.60 W/kg

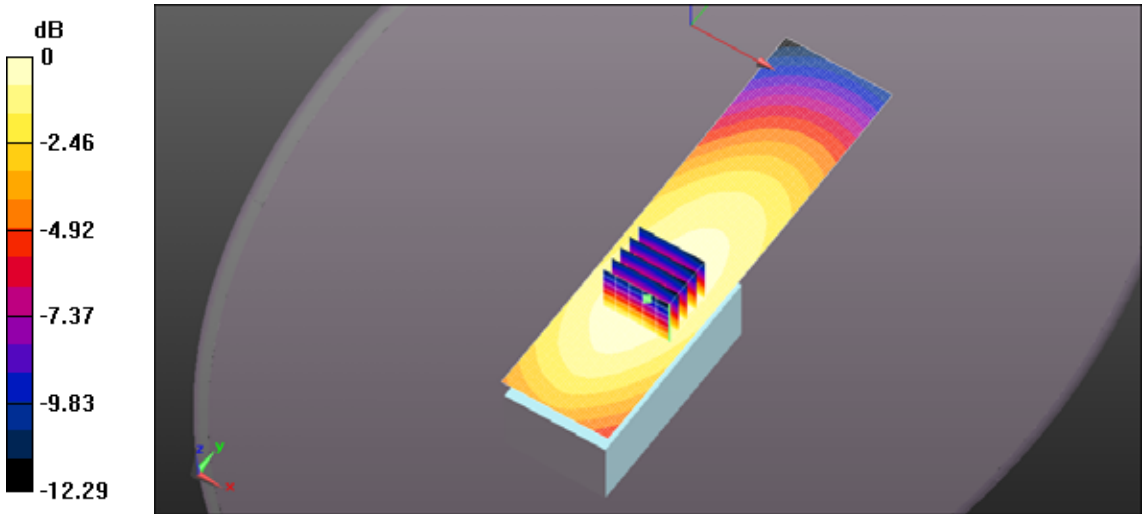

0 dB = 3.90 W/kg = 5.92 dBW/kg

EXHIBIT 3. HEAD SAR MEASUREMENT

File Name: FA-S81U 405MHz-2026.da52:0

DUT: DUT Sample Brick w. Antenna; Type: Sample; Serial: IMEI Number

Communication System: UID 10000, CW; Frequency: 405 MHz; Duty Cycle: 1:1
Medium parameters used: f = 405 MHz; σ = 0.816 S/m; ε_r = 44.484; ρ = 1000 kg/m^3 ; Phantom section: Flat Section ; Measurement Standard: DASY5 (IEEE/IEC/ANSI C63.19-2007)

DASY Configuration:

- Probe: ES3DV3 - SN3250; ConvF(7.06, 7.06, 7.06); Calibrated: 3/10/2025;
- Sensor-Surface: 3mm (Mechanical Surface Detection)
- Electronics: DAE4 Sn874; Calibrated: 7/29/2025
- Phantom: ELI 4.0; Type: QD OVA 001 BB; Serial: 1057
- DASY52 52.10.0(1446); SEMCAD X 14.6.10(7417)

ICOM 640 FA-S81U 405MHz Head BP316/Head - d=25mm, Pin=5W (ES-Probe)/Area Scan (41x191x1): Interpolated grid: dx=1.500 mm, dy=1.500 mm
Maximum value of SAR (interpolated) = 3.17 W/kg
ICOM 640 FA-S81U 405MHz Head BP316/Head - d=25mm, Pin=5W (ES-Probe)/Zoom Scan (5x5x7) (6x5x7)/Cube 0: Measurement grid: dx=7.5mm, dy=7.5mm, dz=5mm
Reference Value = 63.01 V/m; Power Drift = -0.34 dB
Peak SAR (extrapolated) = 3.94 W/kg
SAR(1 g) = 2.81 W/kg; SAR(10 g) = 2.1 W/kg (SAR corrected for target medium)
Maximum value of SAR (measured) = 3.14 W/kg

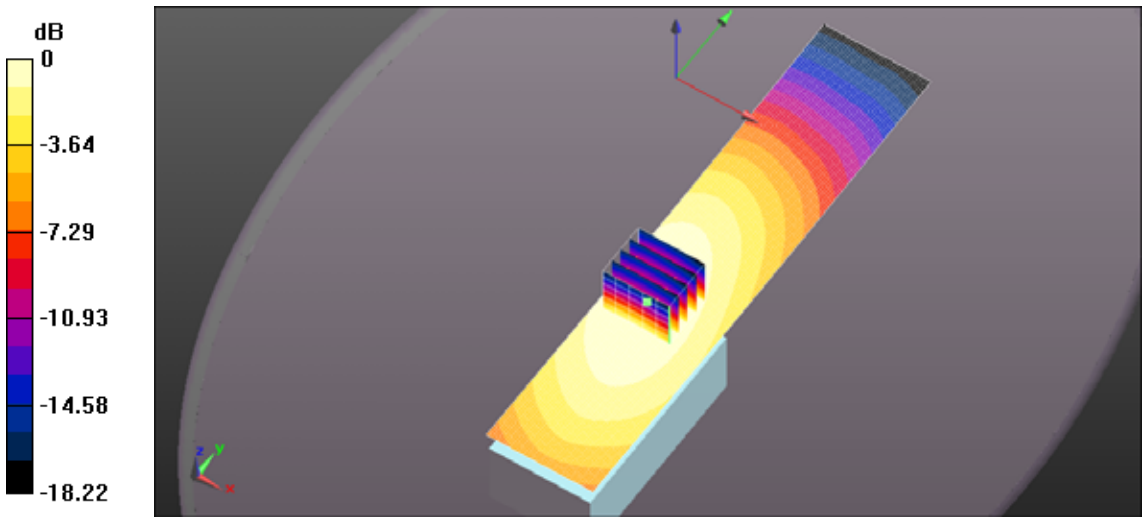

0 dB = 3.17 W/kg = 5.01 dBW/kg

File Name: FA-S81U 430MHz-2026.da52:0

DUT: DUT Sample Brick w. Antenna; Type: Sample; Serial: IMEI Number

Communication System: UID 10000, CW; Frequency: 430 MHz; Duty Cycle: 1:1
Medium parameters used: f = 430 MHz; σ = 0.824 S/m; ε_r = 43.72; ρ = 1000 kg/m^3 ; Phantom section: Flat Section ; Measurement Standard: DASY5 (IEEE/IEC/ANSI C63.19-2007)

DASY Configuration:

- Probe: ES3DV3 - SN3250; ConvF(7.06, 7.06, 7.06); Calibrated: 3/10/2025;
- Sensor-Surface: 3mm (Mechanical Surface Detection)
- Electronics: DAE4 Sn874; Calibrated: 7/29/2025
- Phantom: ELI 4.0; Type: QD OVA 001 BB; Serial: 1057
- DASY52 52.10.0(1446); SEMCAD X 14.6.10(7417)

ICOM 640 FA-S81U 430MHz Head BP316/Head - d=25mm, Pin=5W (ES-Probe)/Area Scan (51x181x1): Interpolated grid: dx=1.500 mm, dy=1.500 mm
Maximum value of SAR (interpolated) = 3.53 W/kg
ICOM 640 FA-S81U 430MHz Head BP316/Head - d=25mm, Pin=5W (ES-Probe)/Zoom Scan (5x5x7) (6x5x7)/Cube 0: Measurement grid: dx=7.5mm, dy=7.5mm, dz=5mm
Reference Value = 64.98 V/m; Power Drift = 0.02 dB
Peak SAR (extrapolated) = 4.41 W/kg
SAR(1 g) = 3.11 W/kg; SAR(10 g) = 2.3 W/kg (SAR corrected for target medium)
Maximum value of SAR (measured) = 3.48 W/kg

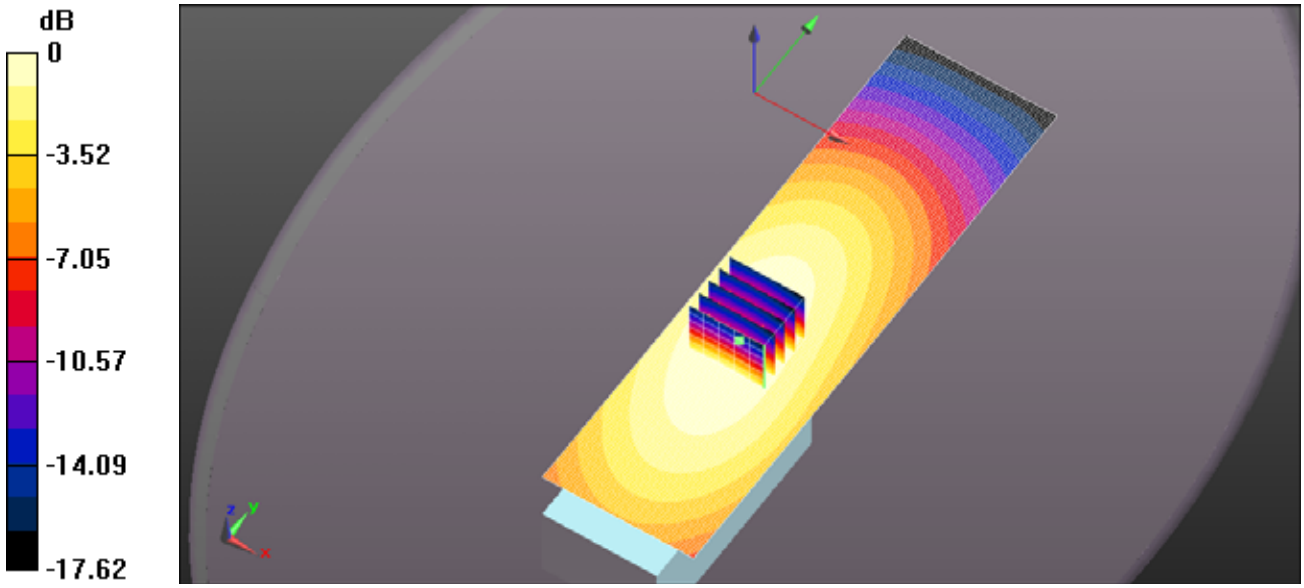

0 dB = 3.53 W/kg = 5.48 dBW/kg

File Name: FA-S82U 442.5MHz-2026.da52:0

DUT: DUT Sample Brick w. Antenna; Type: Sample; Serial: IMEI Number

Communication System: UID 10000, CW; Frequency: 442.5 MHz; Duty Cycle: 1:1
Medium parameters used (interpolated): f = 442.5 MHz; σ = 0.833 S/m; ε_r = 43.432; ρ = 1000 kg/m^3 ;
Phantom section: Flat Section ; Measurement Standard: DASY5 (IEEE/IEC/ANSI C63.19-2007)

DASY Configuration:

- Probe: ES3DV3 - SN3250; ConvF(7.06, 7.06, 7.06); Calibrated: 3/10/2025;
- Sensor-Surface: 3mm (Mechanical Surface Detection)
- Electronics: DAE4 Sn874; Calibrated: 7/29/2025
- Phantom: ELI 4.0; Type: QD OVA 001 BB; Serial: 1057
- DASY52 52.10.0(1446); SEMCAD X 14.6.10(7417)

ICOM 640 FA-S82U 442.5MHz Head BP316/Head - d=25mm, Pin=5W (ES-Probe)/Area Scan (51x181x1): Interpolated grid: dx=1.500 mm, dy=1.500 mm
Info: Interpolated medium parameters used for SAR evaluation.
Maximum value of SAR (interpolated) = 6.82 W/kg
ICOM 640 FA-S82U 442.5MHz Head BP316/Head - d=25mm, Pin=5W (ES-Probe)/Zoom Scan (5x5x7) (6x5x7)/Cube 0: Measurement grid: dx=7.5mm, dy=7.5mm, dz=5mm
Reference Value = 91.19 V/m; Power Drift = -0.42 dB
Peak SAR (extrapolated) = 8.35 W/kg
SAR(1 g) = 5.83 W/kg; SAR(10 g) = 4.28 W/kg (SAR corrected for target medium)
Info: Interpolated medium parameters used for SAR evaluation.
Maximum value of SAR (measured) = 6.55 W/kg

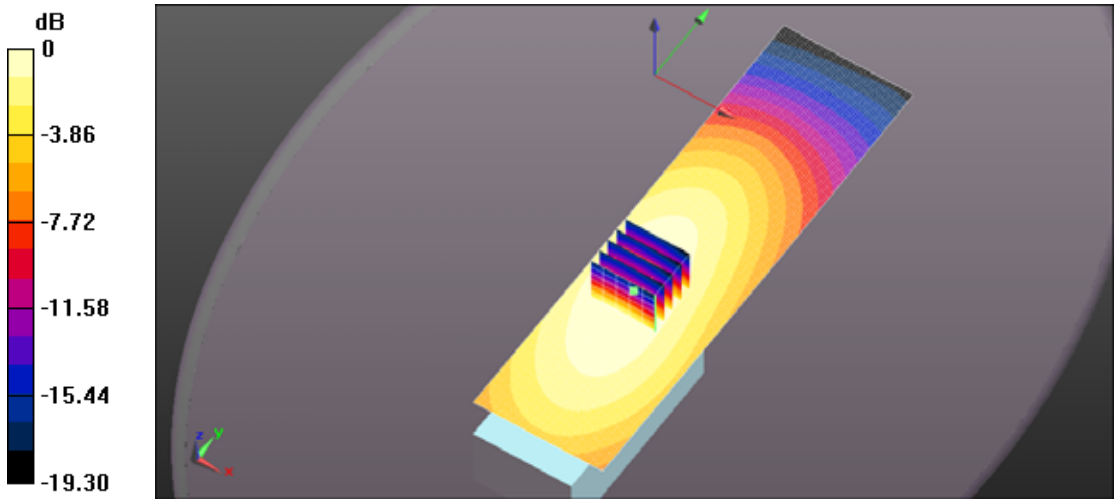

0 dB = 6.82 W/kg = 8.34 dBW/kg

File Name: FA-S82U 467.5MHz-2026.da52:0

DUT: DUT Sample Brick w. Antenna; Type: Sample; Serial: IMEI Number

Communication System: UID 10000, CW; Frequency: 467.5 MHz; Duty Cycle: 1:1
Medium parameters used (interpolated): f = 467.5 MHz; σ = 0.87 S/m; ε_r = 43.025; ρ = 1000 kg/m^3 ;
Phantom section: Flat Section ; Measurement Standard: DASY5 (IEEE/IEC/ANSI C63.19-2007)

DASY Configuration:

- Probe: ES3DV3 - SN3250; ConvF(7.06, 7.06, 7.06); Calibrated: 3/10/2025;
- Sensor-Surface: 3mm (Mechanical Surface Detection)
- Electronics: DAE4 Sn874; Calibrated: 7/29/2025
- Phantom: ELI 4.0; Type: QD OVA 001 BB; Serial: 1057
- DASY52 52.10.0(1446); SEMCAD X 14.6.10(7417)

ICOM 640 FA-S82U 467.5MHz Head BP316/Head - d=25mm, Pin=5W (ES-Probe)/Area Scan (51x181x1): Interpolated grid: dx=1.500 mm, dy=1.500 mm
Info: Interpolated medium parameters used for SAR evaluation.
Maximum value of SAR (interpolated) = 2.67 W/kg
ICOM 640 FA-S82U 467.5MHz Head BP316/Head - d=25mm, Pin=5W (ES-Probe)/Zoom Scan (5x5x7) (6x5x7)/Cube 0: Measurement grid: dx=7.5mm, dy=7.5mm, dz=5mm
Reference Value = 52.52 V/m; Power Drift = -0.36 dB
Peak SAR (extrapolated) = 3.30 W/kg
SAR(1 g) = 2.31 W/kg; SAR(10 g) = 1.7 W/kg (SAR corrected for target medium)
Info: Interpolated medium parameters used for SAR evaluation.
Maximum value of SAR (measured) = 2.59 W/kg

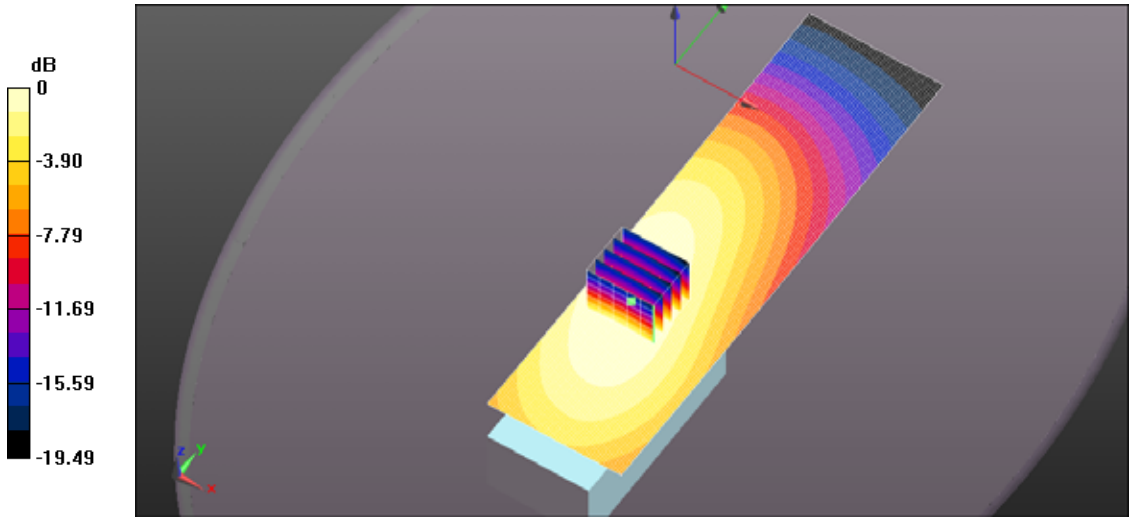

0 dB = 2.67 W/kg = 4.27 dBW/kg

File Name: FA-S83U 470MHz-2026.da52:0

DUT: DUT Sample Brick w. Antenna; Type: Sample; Serial: IMEI Number

Communication System: UID 10000, CW; Frequency: 470 MHz; Duty Cycle: 1:1
Medium parameters used: f = 470 MHz; σ = 0.874 S/m; ε_r = 42.95; ρ = 1000 kg/m^3 ; Phantom section: Flat Section ; Measurement Standard: DASY5 (IEEE/IEC/ANSI C63.19-2007)

DASY Configuration:

- Probe: ES3DV3 - SN3250; ConvF(7.06, 7.06, 7.06); Calibrated: 3/10/2025;
- Sensor-Surface: 3mm (Mechanical Surface Detection)
- Electronics: DAE4 Sn874; Calibrated: 7/29/2025
- Phantom: ELI 4.0; Type: QD OVA 001 BB; Serial: 1057
- DASY52 52.10.0(1446); SEMCAD X 14.6.10(7417)

ICOM 640 FA-S83U 470MHz Head BP316/Head - d=25mm, Pin=5W (ES-Probe)/Area Scan (51x181x1): Interpolated grid: dx=1.500 mm, dy=1.500 mm
Maximum value of SAR (interpolated) = 6.15 W/kg
ICOM 640 FA-S83U 470MHz Head BP316/Head - d=25mm, Pin=5W (ES-Probe)/Zoom Scan (5x5x7) (6x5x7)/Cube 0: Measurement grid: dx=7.5mm, dy=7.5mm, dz=5mm
Reference Value = 82.28 V/m; Power Drift = -0.16 dB
Peak SAR (extrapolated) = 7.67 W/kg
SAR(1 g) = 5.31 W/kg; SAR(10 g) = 3.86 W/kg (SAR corrected for target medium)
Maximum value of SAR (measured) = 6.02 W/kg

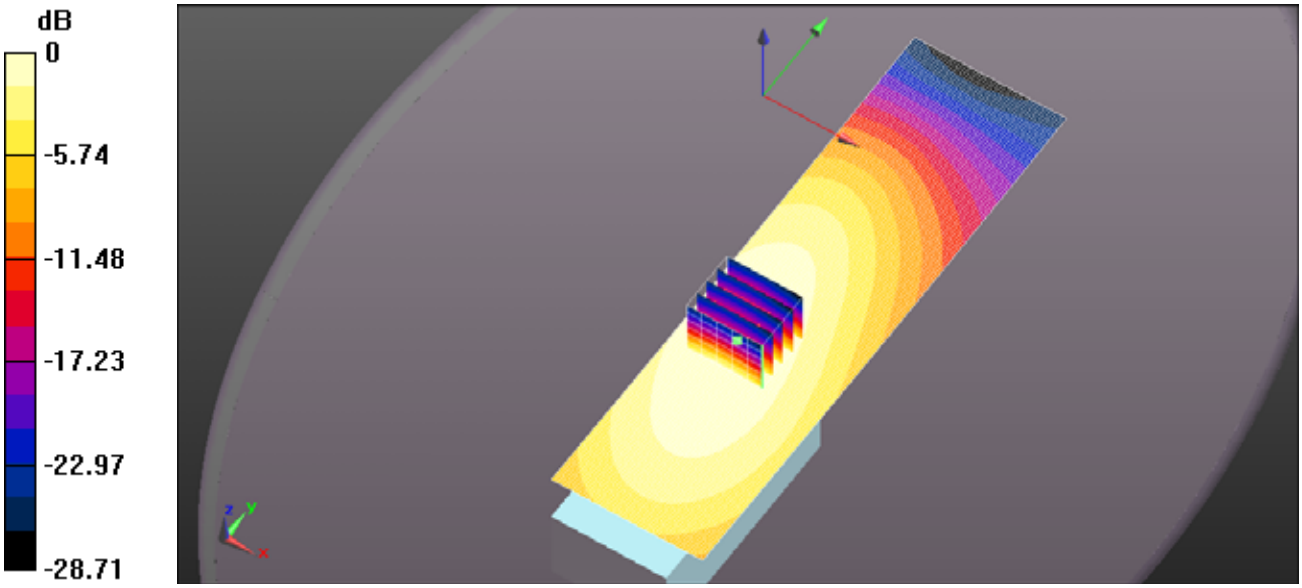

0 dB = 6.15 W/kg = 7.89 dBW/kg

File Name: FA-S83U 495MHz-2026.da52:0

DUT: DUT Sample Brick w. Antenna; Type: Sample; Serial: IMEI Number

Communication System: UID 10000, CW; Frequency: 495 MHz; Duty Cycle: 1:1
Medium parameters used: f = 495 MHz; σ = 0.905 S/m; ε_r = 42.574; ρ = 1000 kg/m^3 ; Phantom section: Flat Section ; Measurement Standard: DASY5 (IEEE/IEC/ANSI C63.19-2007)

DASY Configuration:

- Probe: ES3DV3 - SN3250; ConvF(7.06, 7.06, 7.06); Calibrated: 3/10/2025;
- Sensor-Surface: 3mm (Mechanical Surface Detection)
- Electronics: DAE4 Sn874; Calibrated: 7/29/2025
- Phantom: ELI 4.0; Type: QD OVA 001 BB; Serial: 1057
- DASY52 52.10.0(1446); SEMCAD X 14.6.10(7417)

ICOM 640 FA-S83U 495MHz Head BP316/Head - d=25mm, Pin=5W (ES-Probe)/Area Scan (51x181x1): Interpolated grid: dx=1.500 mm, dy=1.500 mm
Maximum value of SAR (interpolated) = 4.80 W/kg
ICOM 640 FA-S83U 495MHz Head BP316/Head - d=25mm, Pin=5W (ES-Probe)/Zoom Scan (5x5x7) (6x5x7)/Cube 0: Measurement grid: dx=7.5mm, dy=7.5mm, dz=5mm
Reference Value = 70.74 V/m; Power Drift = -0.04 dB
Peak SAR (extrapolated) = 6.02 W/kg
SAR(1 g) = 4.19 W/kg; SAR(10 g) = 3.05 W/kg (SAR corrected for target medium)
Maximum value of SAR (measured) = 4.72 W/kg

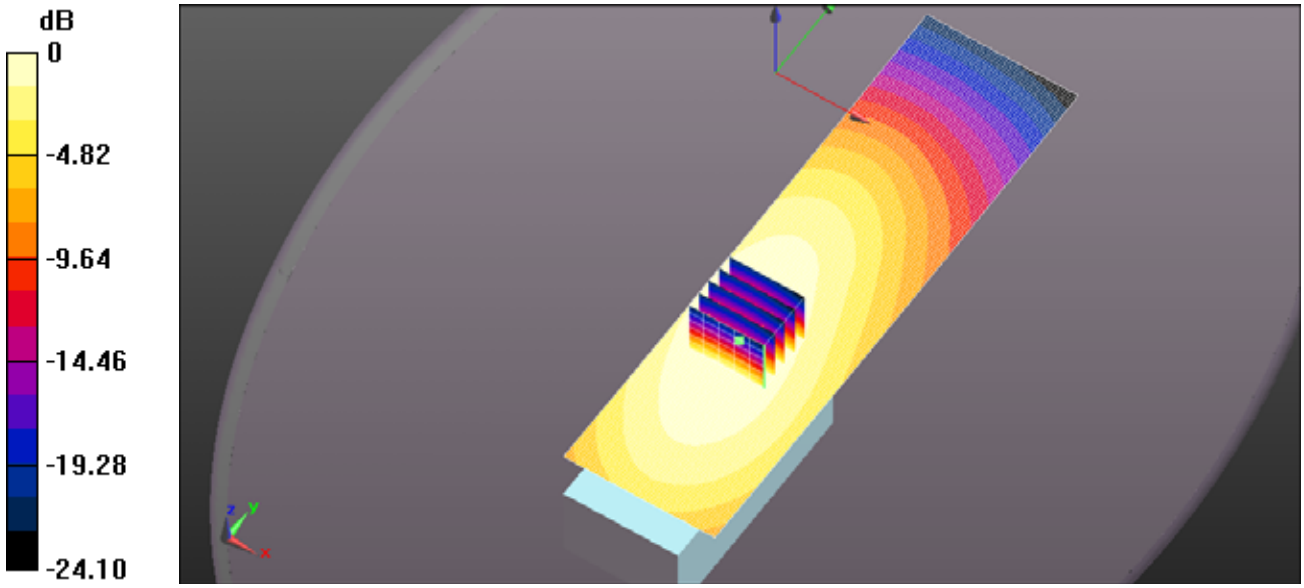

0 dB = 4.80 W/kg = 6.81 dBW/kg

File Name: FA-S83U 520MHz-2026.da52:0

DUT: DUT Sample Brick w. Antenna; Type: Sample; Serial: IMEI Number

Communication System: UID 10000, CW; Frequency: 520 MHz; Duty Cycle: 1:1
Medium parameters used: f = 520 MHz; σ = 0.92 S/m; ε_r = 42.123; ρ = 1000 kg/m^3 ; Phantom section: Flat Section ; Measurement Standard: DASY5 (IEEE/IEC/ANSI C63.19-2007)

DASY Configuration:

- Probe: ES3DV3 - SN3250; ConvF(7.06, 7.06, 7.06); Calibrated: 3/10/2025;
- Sensor-Surface: 3mm (Mechanical Surface Detection)
- Electronics: DAE4 Sn874; Calibrated: 7/29/2025
- Phantom: ELI 4.0; Type: QD OVA 001 BB; Serial: 1057
- DASY52 52.10.0(1446); SEMCAD X 14.6.10(7417)

ICOM 640 FA-S83U 520MHz Head BP316/Head - d=25mm, Pin=5W (ES-Probe)/Area Scan (51x181x1): Interpolated grid: dx=1.500 mm, dy=1.500 mm
Maximum value of SAR (interpolated) = 6.14 W/kg

ICOM 640 FA-S83U 520MHz Head BP316/Head - d=25mm, Pin=5W (ES-Probe)/Zoom Scan (5x5x7) (6x5x7)/Cube 0: Measurement grid: dx=7.5mm, dy=7.5mm, dz=5mm
Reference Value = 87.06 V/m; Power Drift = -0.80 dB
Peak SAR (extrapolated) = 7.37 W/kg
SAR(1 g) = 5.22 W/kg; SAR(10 g) = 3.81 W/kg (SAR corrected for target medium)
Maximum value of SAR (measured) = 5.86 W/kg

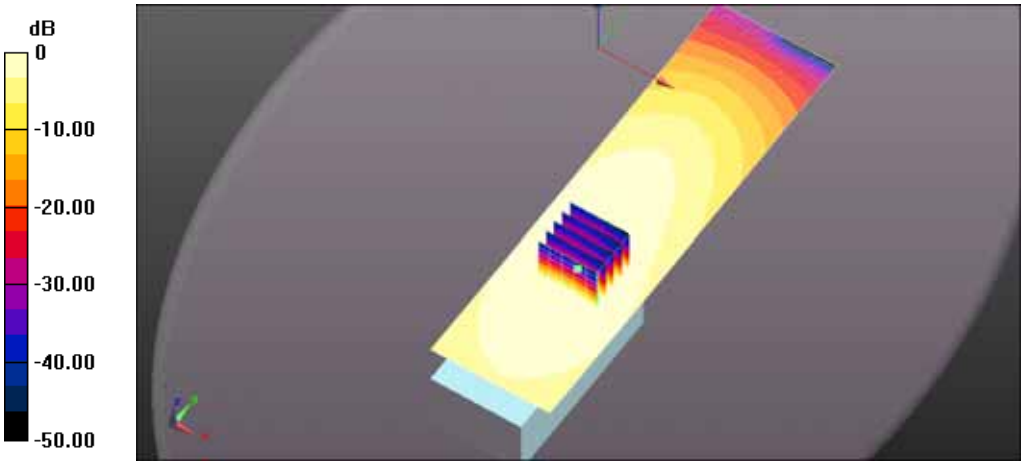

0 dB = 6.14 W/kg = 7.88 dBW/kg

File Name: FA-S81US 412.5MHz-2026.da52:0

DUT: DUT Sample Brick w. Antenna; Type: Sample; Serial: IMEI Number

Communication System: UID 10000, CW; Frequency: 412.5 MHz; Duty Cycle: 1:1
Medium parameters used (interpolated): f = 412.5 MHz; σ = 0.819 S/m; ε_r = 44.204; ρ = 1000 kg/m^3 ;
Phantom section: Flat Section ; Measurement Standard: DASY5 (IEEE/IEC/ANSI C63.19-2007)

DASY Configuration:

- Probe: ES3DV3 - SN3250; ConvF(7.06, 7.06, 7.06); Calibrated: 3/10/2025;
- Sensor-Surface: 3mm (Mechanical Surface Detection)
- Electronics: DAE4 Sn874; Calibrated: 7/29/2025
- Phantom: ELI 4.0; Type: QD OVA 001 BB; Serial: 1057
- DASY52 52.10.0(1446); SEMCAD X 14.6.10(7417)

ICOM 640 FA-S81 US 412.5MHz Head BP316/Head - d=25mm, Pin=5W (ES-Probe)/Area Scan (51x181x1): Interpolated grid: dx=1.500 mm, dy=1.500 mm
Info: Interpolated medium parameters used for SAR evaluation.
Maximum value of SAR (interpolated) = 4.64 W/kg
ICOM 640 FA-S81 US 412.5MHz Head BP316/Head - d=25mm, Pin=5W (ES-Probe)/Zoom Scan (5x5x7) (6x5x7)/Cube 0: Measurement grid: dx=7.5mm, dy=7.5mm, dz=5mm
Reference Value = 74.34 V/m; Power Drift = -0.19 dB
Peak SAR (extrapolated) = 5.83 W/kg
SAR(1 g) = 4.11 W/kg; SAR(10 g) = 3.05 W/kg (SAR corrected for target medium)
Info: Interpolated medium parameters used for SAR evaluation.
Maximum value of SAR (measured) = 4.60 W/kg

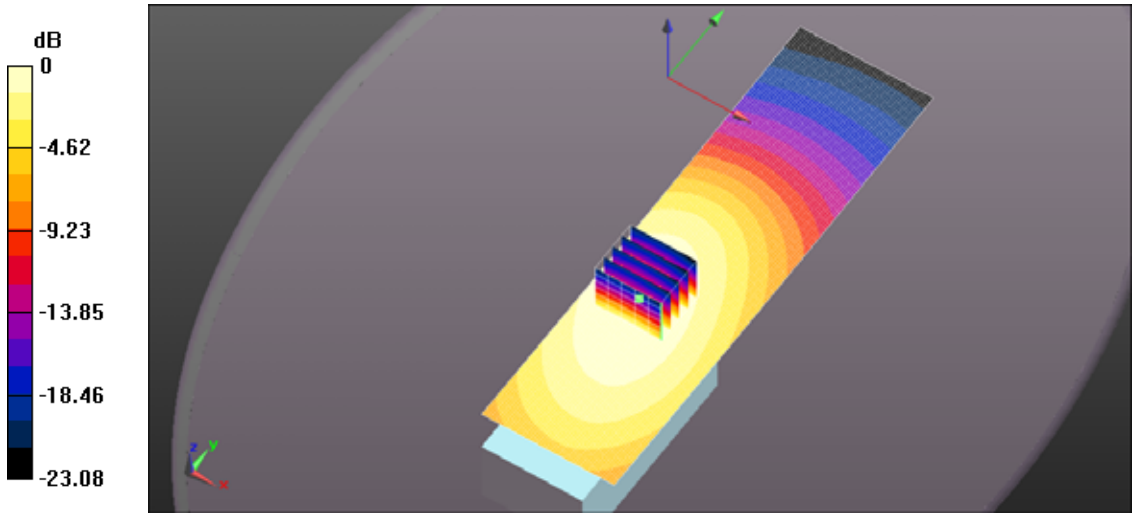

0 dB = 4.64 W/kg = 6.66 dBW/kg

File Name: FA-S81US 437.5MHz-2026.da52:0

DUT: DUT Sample Brick w. Antenna; Type: Sample; Serial: IMEI Number

Communication System: UID 10000, CW; Frequency: 437.5 MHz; Duty Cycle: 1:1
Medium parameters used (interpolated): f = 437.5 MHz; σ = 0.829 S/m; ε_r = 43.543; ρ = 1000 kg/m^3 ;
Phantom section: Flat Section ; Measurement Standard: DASY5 (IEEE/IEC/ANSI C63.19-2007)

DASY Configuration:

- Probe: ES3DV3 - SN3250; ConvF(7.06, 7.06, 7.06); Calibrated: 3/10/2025;
- Sensor-Surface: 3mm (Mechanical Surface Detection)
- Electronics: DAE4 Sn874; Calibrated: 7/29/2025
- Phantom: ELI 4.0; Type: QD OVA 001 BB; Serial: 1057
- DASY52 52.10.0(1446); SEMCAD X 14.6.10(7417)

ICOM 640 FA-S81 US 437.5MHz Head BP316/Head - d=25mm, Pin=5W (ES-Probe)/Area Scan (51x181x1): Interpolated grid: dx=1.500 mm, dy=1.500 mm
Info: Interpolated medium parameters used for SAR evaluation.
Maximum value of SAR (interpolated) = 3.80 W/kg
ICOM 640 FA-S81 US 437.5MHz Head BP316/Head - d=25mm, Pin=5W (ES-Probe)/Zoom Scan (5x5x7) (6x5x7)/Cube 0: Measurement grid: dx=7.5mm, dy=7.5mm, dz=5mm
Reference Value = 63.49 V/m; Power Drift = 0.06 dB
Peak SAR (extrapolated) = 4.68 W/kg
SAR(1 g) = 3.31 W/kg; SAR(10 g) = 2.45 W/kg (SAR corrected for target medium)
Info: Interpolated medium parameters used for SAR evaluation.
Maximum value of SAR (measured) = 3.70 W/kg

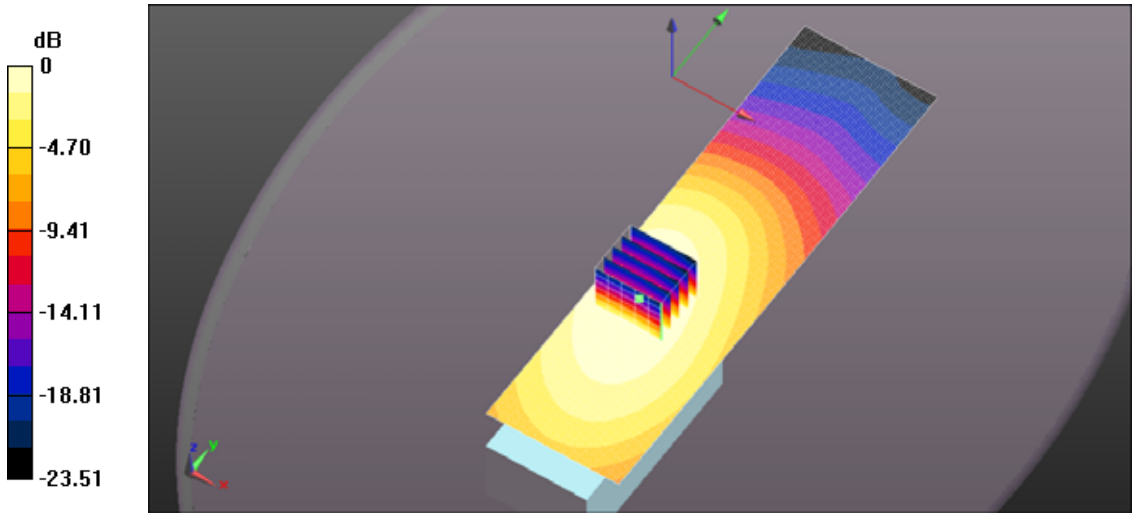

0 dB = 3.80 W/kg = 5.80 dBW/kg

File Name: FA-S82US 450MHz-2026.da52:0

DUT: DUT Sample Brick w. Antenna; Type: Sample; Serial: IMEI Number

Communication System: UID 10000, CW; Frequency: 450 MHz; Duty Cycle: 1:1
Medium parameters used: f = 450 MHz; σ = 0.842 S/m; ε_r = 43.326; ρ = 1000 kg/m^3 ; Phantom section: Flat Section ; Measurement Standard: DASY5 (IEEE/IEC/ANSI C63.19-2007)

DASY Configuration:

- Probe: ES3DV3 - SN3250; ConvF(7.06, 7.06, 7.06); Calibrated: 3/10/2025;
- Sensor-Surface: 3mm (Mechanical Surface Detection)
- Electronics: DAE4 Sn874; Calibrated: 7/29/2025
- Phantom: ELI 4.0; Type: QD OVA 001 BB; Serial: 1057
- DASY52 52.10.0(1446); SEMCAD X 14.6.10(7417)

ICOM 640 FA-S82 US 450MHz Head BP316/Head - d=25mm, Pin=5W (ES-Probe)/Area Scan (51x181x1): Interpolated grid: dx=1.500 mm, dy=1.500 mm
Maximum value of SAR (interpolated) = 2.78 W/kg
ICOM 640 FA-S82 US 450MHz Head BP316/Head - d=25mm, Pin=5W (ES-Probe)/Zoom Scan (5x5x7) (6x5x7)/Cube 0: Measurement grid: dx=7.5mm, dy=7.5mm, dz=5mm
Reference Value = 56.49 V/m; Power Drift = -0.47 dB
Peak SAR (extrapolated) = 3.34 W/kg
SAR(1 g) = 2.41 W/kg; SAR(10 g) = 1.77 W/kg (SAR corrected for target medium)
Maximum value of SAR (measured) = 2.64 W/kg

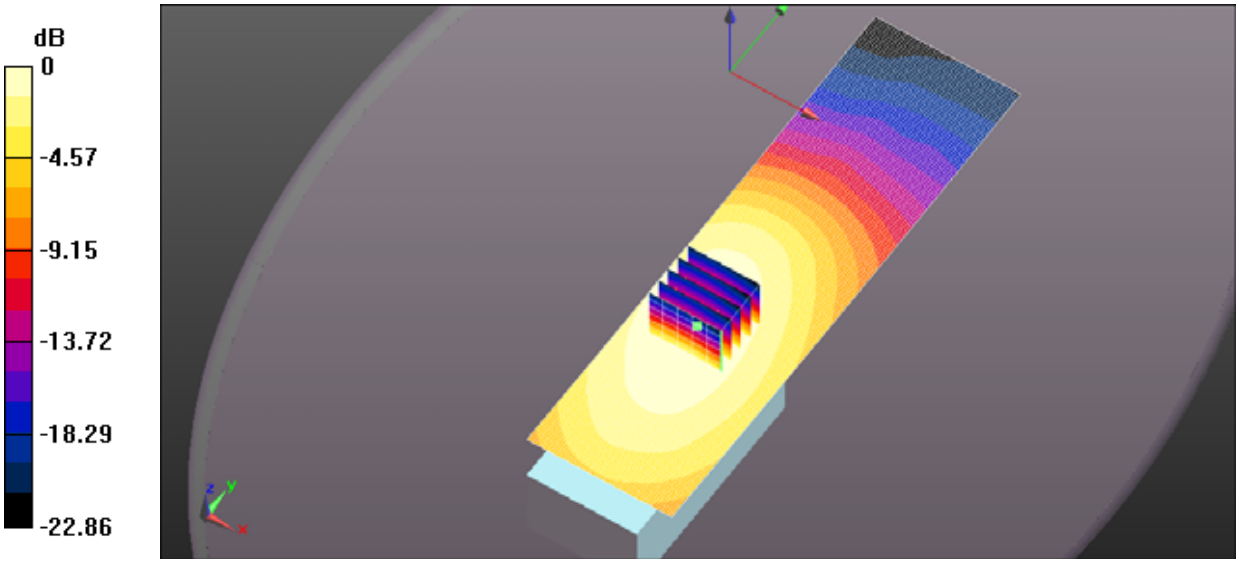

0 dB = 2.78 W/kg = 4.44 dBW/kg

File Name: FA-S82US 490MHz-2026.da52:0

DUT: DUT Sample Brick w. Antenna; Type: Sample; Serial: IMEI Number

Communication System: UID 10000, CW; Frequency: 490 MHz; Duty Cycle: 1:1
Medium parameters used: f = 490 MHz; σ = 0.907 S/m; ε_r = 43.299; ρ = 1000 kg/m^3 ; Phantom section: Flat Section ; Measurement Standard: DASY5 (IEEE/IEC/ANSI C63.19-2007)

DASY Configuration:

- Probe: ES3DV3 - SN3250; ConvF(7.06, 7.06, 7.06); Calibrated: 3/10/2025;
- Sensor-Surface: 3mm (Mechanical Surface Detection)
- Electronics: DAE4 Sn874; Calibrated: 7/29/2025
- Phantom: ELI 4.0; Type: QD OVA 001 BB; Serial: 1057
- DASY52 52.10.0(1446); SEMCAD X 14.6.10(7417)

ICOM 640 FA-S82 US 490MHz Head BP316/Head - d=25mm, Pin=5W (ES-Probe)/Area Scan (51x181x1): Interpolated grid: dx=1.500 mm, dy=1.500 mm
Maximum value of SAR (interpolated) = 1.63 W/kg
ICOM 640 FA-S82 US 490MHz Head BP316/Head - d=25mm, Pin=5W (ES-Probe)/Zoom Scan (5x5x7) (6x5x7)/Cube 0: Measurement grid: dx=7.5mm, dy=7.5mm, dz=5mm
Reference Value = 39.59 V/m; Power Drift = -0.25 dB
Peak SAR (extrapolated) = 2.07 W/kg
SAR(1 g) = 1.45 W/kg; SAR(10 g) = 1.07 W/kg (SAR corrected for target medium)
Maximum value of SAR (measured) = 1.63 W/kg

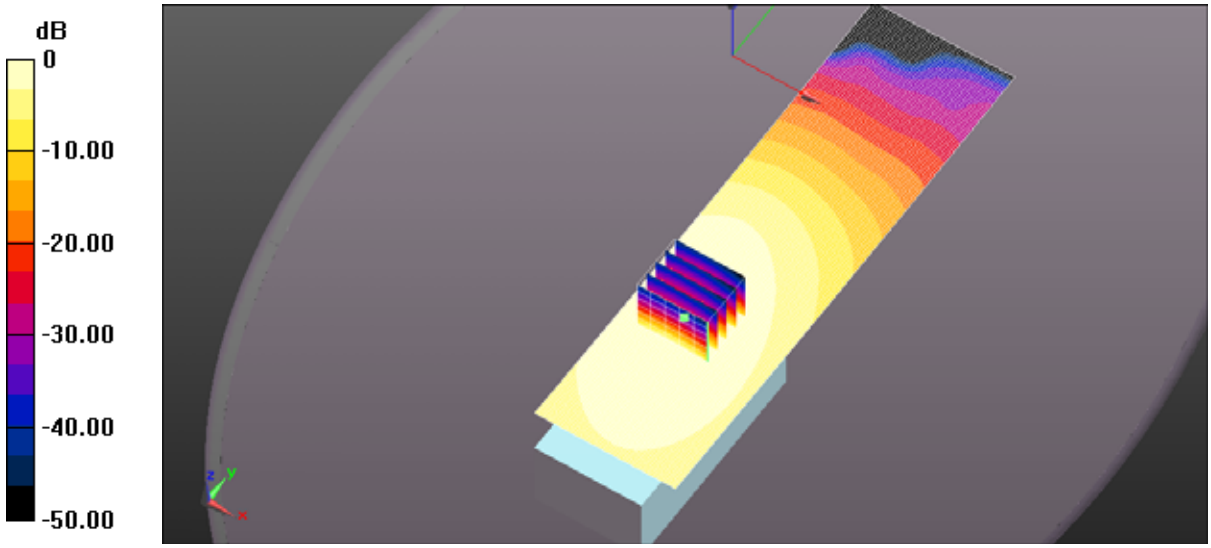

0 dB = 1.63 W/kg = 2.13 dBW/kg

File Name: 400MHz antenna FA-S76UC 415MHz-2026.da52:0

DUT: DUT Sample Brick w. Antenna; Type: Sample; Serial: IMEI Number

Communication System: UID 10000, CW; Frequency: 415 MHz; Duty Cycle: 1:1
Medium parameters used: f = 415 MHz; σ = 0.836 S/m; ε_r = 45.057; ρ = 1000 kg/m^3 ; Phantom section: Flat Section ; Measurement Standard: DASY5 (IEEE/IEC/ANSI C63.19-2007)

DASY Configuration:

- Probe: ES3DV3 - SN3250; ConvF(7.06, 7.06, 7.06); Calibrated: 3/10/2025;
- Sensor-Surface: 3mm (Mechanical Surface Detection)
- Electronics: DAE4 Sn874; Calibrated: 7/29/2025
- Phantom: ELI 4.0; Type: QD OVA 001 BB; Serial: 1057
- DASY52 52.10.0(1446); SEMCAD X 14.6.10(7417)

ICOM 640 400MHz antenna FA-S76 UC 415MHz Head BP316/Head - d=25mm, Pin=5W (ES-Probe)/Area Scan (51x181x1): Interpolated grid: dx=1.500 mm, dy=1.500 mm
Maximum value of SAR (interpolated) = 4.13 W/kg
ICOM 640 400MHz antenna FA-S76 UC 415MHz Head BP316/Head - d=25mm, Pin=5W (ES-Probe)/Zoom Scan (5x5x7) (6x5x7)/Cube 0: Measurement grid: dx=7.5mm, dy=7.5mm, dz=5mm
Reference Value = 66.86 V/m; Power Drift = -0.11 dB
Peak SAR (extrapolated) = 5.07 W/kg
SAR(1 g) = 3.65 W/kg; SAR(10 g) = 2.76 W/kg (SAR corrected for target medium)
Maximum value of SAR (measured) = 4.06 W/kg

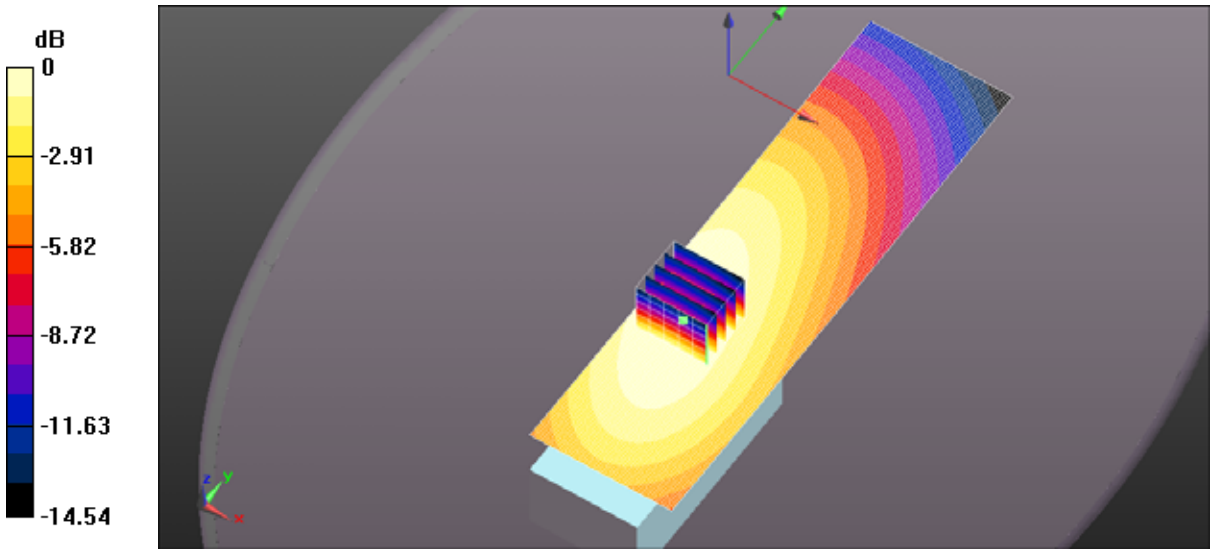

0 dB = 4.13 W/kg = 6.16 dBW/kg

File Name: 400MHz antenna FA-S76UC 450MHz-2026.da52:0

DUT: DUT Sample Brick w. Antenna; Type: Sample; Serial: IMEI Number

Communication System: UID 10000, CW; Frequency: 450 MHz; Duty Cycle: 1:1
Medium parameters used: f = 450 MHz; σ = 0.868 S/m; ε_r = 44.427; ρ = 1000 kg/m^3 ; Phantom section: Flat Section ; Measurement Standard: DASY5 (IEEE/IEC/ANSI C63.19-2007)

DASY Configuration:

- Probe: ES3DV3 - SN3250; ConvF(7.06, 7.06, 7.06); Calibrated: 3/10/2025;
- Sensor-Surface: 3mm (Mechanical Surface Detection)
- Electronics: DAE4 Sn874; Calibrated: 7/29/2025
- Phantom: ELI 4.0; Type: QD OVA 001 BB; Serial: 1057
- DASY52 52.10.0(1446); SEMCAD X 14.6.10(7417)

ICOM 640 400MHz antenna FA-S76 UC 450MHz Head BP316/Head - d=25mm, Pin=5W (ES-Probe)/Area Scan (51x181x1): Interpolated grid: dx=1.500 mm, dy=1.500 mm
Maximum value of SAR (interpolated) = 2.92 W/kg
ICOM 640 400MHz antenna FA-S76 UC 450MHz Head BP316/Head - d=25mm, Pin=5W (ES-Probe)/Zoom Scan (5x5x7) (6x5x7)/Cube 0: Measurement grid: dx=7.5mm, dy=7.5mm, dz=5mm
Reference Value = 54.01 V/m; Power Drift = -0.33 dB
Peak SAR (extrapolated) = 3.61 W/kg
SAR(1 g) = 2.6 W/kg; SAR(10 g) = 1.95 W/kg (SAR corrected for target medium)
Maximum value of SAR (measured) = 2.88 W/kg

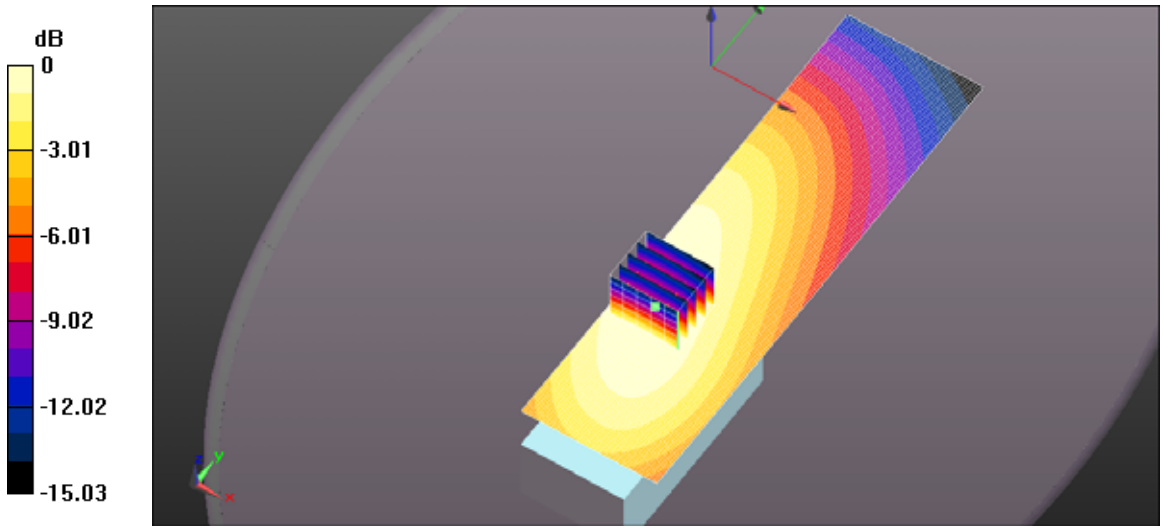

0 dB = 2.92 W/kg = 4.65 dBW/kg

File Name: 400MHz antenna FA-S76UC 485MHz-2026.da52:0

DUT: DUT Sample Brick w. Antenna; Type: Sample; Serial: IMEI Number

Communication System: UID 10000, CW; Frequency: 485 MHz; Duty Cycle: 1:1
Medium parameters used: f = 485 MHz; σ = 0.904 S/m; ε_r = 43.455; ρ = 1000 kg/m^3 ; Phantom section: Flat Section ; Measurement Standard: DASY5 (IEEE/IEC/ANSI C63.19-2007)

DASY Configuration:

- Probe: ES3DV3 - SN3250; ConvF(7.06, 7.06, 7.06); Calibrated: 3/10/2025;
- Sensor-Surface: 3mm (Mechanical Surface Detection)
- Electronics: DAE4 Sn874; Calibrated: 7/29/2025
- Phantom: ELI 4.0; Type: QD OVA 001 BB; Serial: 1057
- DASY52 52.10.0(1446); SEMCAD X 14.6.10(7417)

ICOM 640 400MHz antenna FA-S76 UC 485MHz Head BP316/Head - d=25mm, Pin=5W (ES-Probe)/Area Scan (51x181x1): Interpolated grid: dx=1.500 mm, dy=1.500 mm
Maximum value of SAR (interpolated) = 1.32 W/kg
ICOM 640 400MHz antenna FA-S76 UC 485MHz Head BP316/Head - d=25mm, Pin=5W (ES-Probe)/Zoom Scan (5x5x7) (6x5x7)/Cube 0: Measurement grid: dx=7.5mm, dy=7.5mm, dz=5mm
Reference Value = 34.18 V/m; Power Drift = -0.30 dB
Peak SAR (extrapolated) = 1.64 W/kg
SAR(1 g) = 1.16 W/kg; SAR(10 g) = 0.855 W/kg (SAR corrected for target medium)
Maximum value of SAR (measured) = 1.30 W/kg

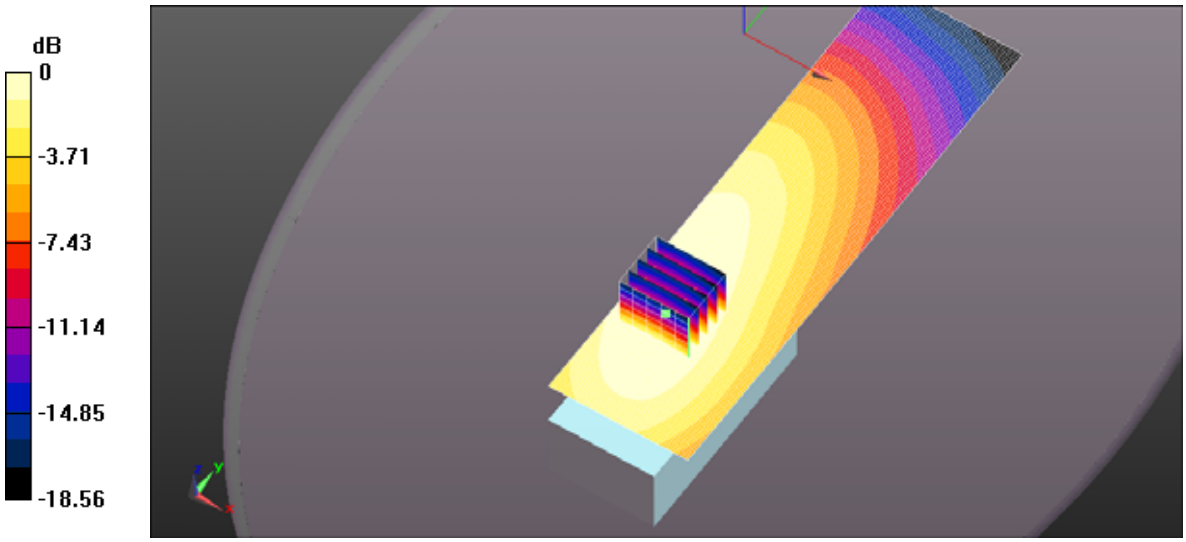

0 dB = 1.32 W/kg = 1.22 dBW/kg

File Name: 400MHz antenna FA-S76UC 520MHz-2026.da52:0

DUT: DUT Sample Brick w. Antenna; Type: Sample; Serial: IMEI Number

Communication System: UID 10000, CW; Frequency: 520 MHz; Duty Cycle: 1:1
Medium parameters used: f = 520 MHz; σ = 0.929 S/m; ε_r = 42.801; ρ = 1000 kg/m^3 ; Phantom section: Flat Section ; Measurement Standard: DASY5 (IEEE/IEC/ANSI C63.19-2007)

DASY Configuration:

- Probe: ES3DV3 - SN3250; ConvF(7.06, 7.06, 7.06); Calibrated: 3/10/2025;
- Sensor-Surface: 3mm (Mechanical Surface Detection)
- Electronics: DAE4 Sn874; Calibrated: 7/29/2025
- Phantom: ELI 4.0; Type: QD OVA 001 BB; Serial: 1057
- DASY52 52.10.0(1446); SEMCAD X 14.6.10(7417)

ICOM 640 400MHz antenna FA-S76 UC 520MHz Head BP316/Head - d=25mm, Pin=5W (ES-Probe)/Area Scan (51x181x1): Interpolated grid: dx=1.500 mm, dy=1.500 mm
Maximum value of SAR (interpolated) = 1.40 W/kg
ICOM 640 400MHz antenna FA-S76 UC 520MHz Head BP316/Head - d=25mm, Pin=5W (ES-Probe)/Zoom Scan (5x5x7) (6x6x7)/Cube 0: Measurement grid: dx=7.5mm, dy=7.5mm, dz=5mm
Reference Value = 33.60 V/m; Power Drift = -0.52 dB
Peak SAR (extrapolated) = 1.72 W/kg
SAR(1 g) = 1.23 W/kg; SAR(10 g) = 0.903 W/kg (SAR corrected for target medium)
Maximum value of SAR (measured) = 1.37 W/kg

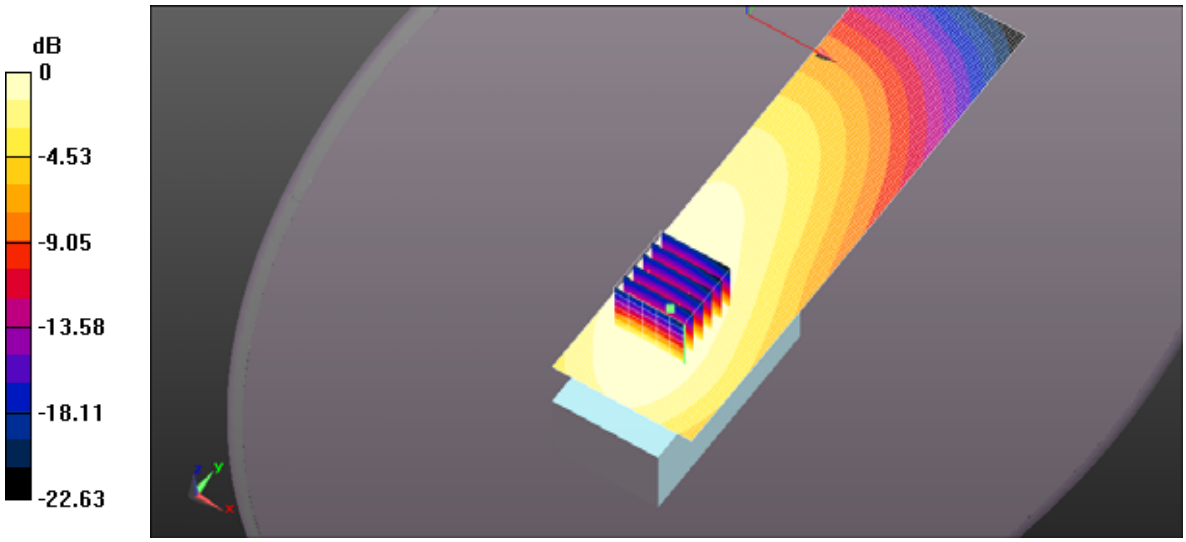

0 dB = 1.40 W/kg = 1.45 dBW/kg

File Name: 420MHz antenna FA-S76UC 420MHz-2026.da52:0

DUT: DUT Sample Brick w. Antenna; Type: Sample; Serial: IMEI Number

Communication System: UID 10000, CW; Frequency: 420 MHz; Duty Cycle: 1:1
Medium parameters used: f = 420 MHz; σ = 0.84 S/m; ε_r = 45.025; ρ = 1000 kg/m^3 ; Phantom section: Flat Section ; Measurement Standard: DASY5 (IEEE/IEC/ANSI C63.19-2007)

DASY Configuration:

- Probe: ES3DV3 - SN3250; ConvF(7.06, 7.06, 7.06); Calibrated: 3/10/2025;
- Sensor-Surface: 3mm (Mechanical Surface Detection)
- Electronics: DAE4 Sn874; Calibrated: 7/29/2025
- Phantom: ELI 4.0; Type: QD OVA 001 BB; Serial: 1057
- DASY52 52.10.0(1446); SEMCAD X 14.6.10(7417)

ICOM 640 420MHz antenna FA-S76 UC 420MHz Head BP316/Head - d=25mm, Pin=5W (ES-Probe)/Area Scan (51x181x1): Interpolated grid: dx=1.500 mm, dy=1.500 mm
Maximum value of SAR (interpolated) = 5.65 W/kg
ICOM 640 420MHz antenna FA-S76 UC 420MHz Head BP316/Head - d=25mm, Pin=5W (ES-Probe)/Zoom Scan (5x5x7) (6x5x7)/Cube 0: Measurement grid: dx=7.5mm, dy=7.5mm, dz=5mm
Reference Value = 75.06 V/m; Power Drift = -0.17 dB
Peak SAR (extrapolated) = 7.01 W/kg
SAR(1 g) = 4.98 W/kg; SAR(10 g) = 3.71 W/kg (SAR corrected for target medium)
Maximum value of SAR (measured) = 5.57 W/kg

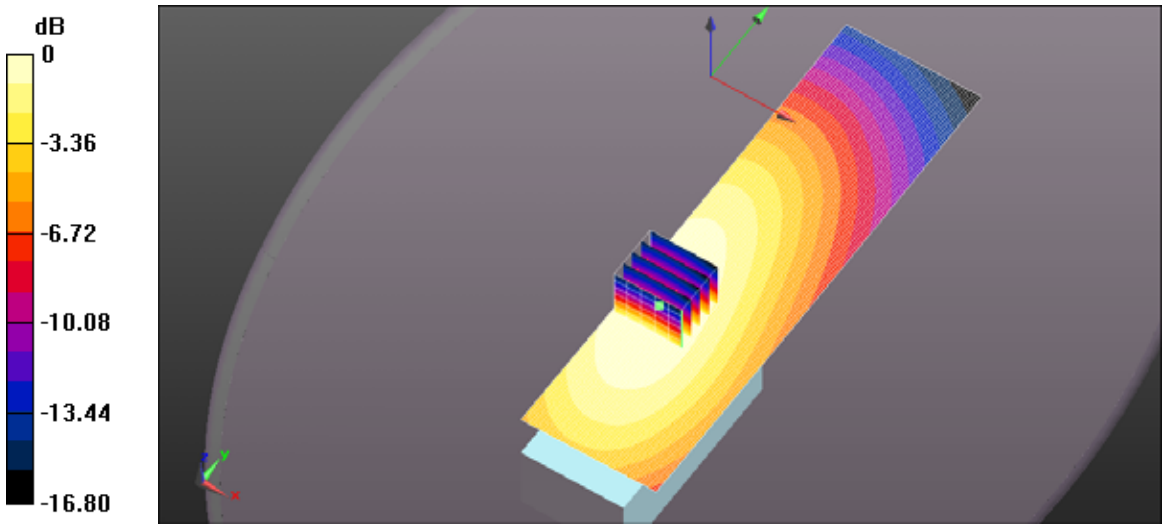

0 dB = 5.65 W/kg = 7.52 dBW/kg

File Name: 420MHz antenna FA-S76UC 450MHz-2026.da52:0

DUT: DUT Sample Brick w. Antenna; Type: Sample; Serial: IMEI Number

Communication System: UID 10000, CW; Frequency: 450 MHz; Duty Cycle: 1:1
Medium parameters used: f = 450 MHz; σ = 0.868 S/m; ε_r = 44.427; ρ = 1000 kg/m^3 ; Phantom section: Flat Section ; Measurement Standard: DASY5 (IEEE/IEC/ANSI C63.19-2007)

DASY Configuration:

- Probe: ES3DV3 - SN3250; ConvF(7.06, 7.06, 7.06); Calibrated: 3/10/2025;
- Sensor-Surface: 3mm (Mechanical Surface Detection)
- Electronics: DAE4 Sn874; Calibrated: 7/29/2025
- Phantom: ELI 4.0; Type: QD OVA 001 BB; Serial: 1057
- DASY52 52.10.0(1446); SEMCAD X 14.6.10(7417)

ICOM 640 420MHz antenna FA-S76 UC 450MHz Head BP316/Head - d=25mm, Pin=5W (ES-Probe)/Area Scan (51x181x1): Interpolated grid: dx=1.500 mm, dy=1.500 mm
Maximum value of SAR (interpolated) = 3.85 W/kg
ICOM 640 420MHz antenna FA-S76 UC 450MHz Head BP316/Head - d=25mm, Pin=5W (ES-Probe)/Zoom Scan (5x5x7) (6x6x7)/Cube 0: Measurement grid: dx=7.5mm, dy=7.5mm, dz=5mm
Reference Value = 56.51 V/m; Power Drift = -0.42 dB
Peak SAR (extrapolated) = 4.73 W/kg
SAR(1 g) = 3.39 W/kg; SAR(10 g) = 2.52 W/kg (SAR corrected for target medium)
Maximum value of SAR (measured) = 3.74 W/kg

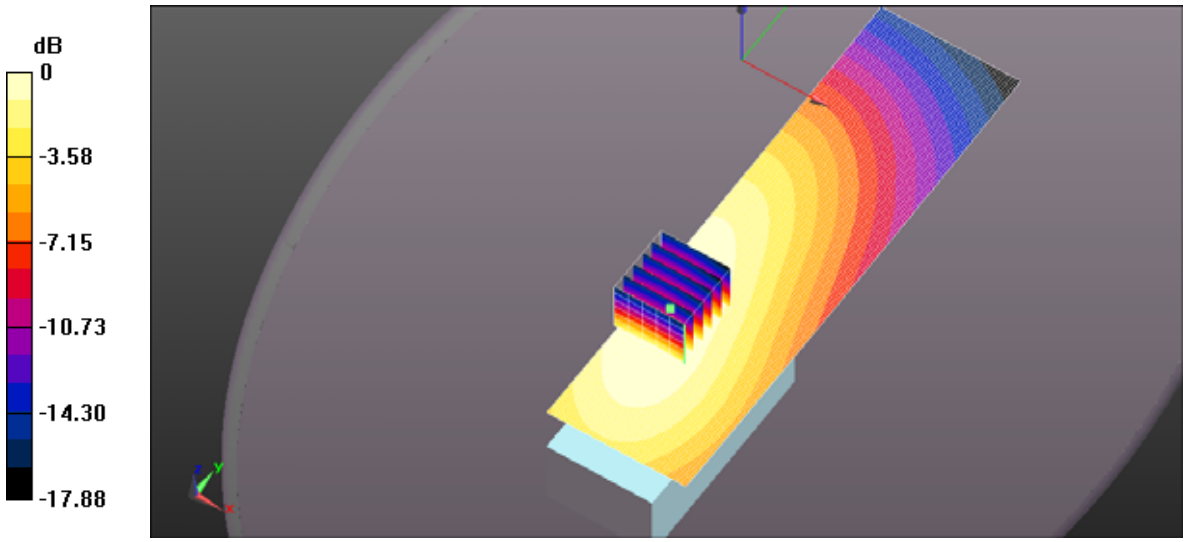

0 dB = 3.85 W/kg = 5.86 dBW/kg

File Name: 420MHz antenna FA-S76UC 450MHz-2026.da52:0

DUT: DUT Sample Brick w. Antenna; Type: Sample; Serial: IMEI Number

Communication System: UID 10000, CW; Frequency: 450 MHz; Duty Cycle: 1:1
Medium parameters used: f = 450 MHz; σ = 0.868 S/m; ε_r = 44.427; ρ = 1000 kg/m^3 ; Phantom section: Flat Section ; Measurement Standard: DASY5 (IEEE/IEC/ANSI C63.19-2007)

DASY Configuration:

- Probe: ES3DV3 - SN3250; ConvF(7.06, 7.06, 7.06); Calibrated: 3/10/2025;
- Sensor-Surface: 3mm (Mechanical Surface Detection)
- Electronics: DAE4 Sn874; Calibrated: 7/29/2025
- Phantom: ELI 4.0; Type: QD OVA 001 BB; Serial: 1057
- DASY52 52.10.0(1446); SEMCAD X 14.6.10(7417)

ICOM 640 420MHz antenna FA-S76 UC 450MHz Head BP316/Head - d=25mm, Pin=5W (ES-Probe)/Area Scan (51x181x1): Interpolated grid: dx=1.500 mm, dy=1.500 mm
Maximum value of SAR (interpolated) = 2.17 W/kg
ICOM 640 420MHz antenna FA-S76 UC 450MHz Head BP316/Head - d=25mm, Pin=5W (ES-Probe)/Zoom Scan (5x5x7) (6x6x7)/Cube 0: Measurement grid: dx=7.5mm, dy=7.5mm, dz=5mm
Reference Value = 45.04 V/m; Power Drift = -0.52 dB
Peak SAR (extrapolated) = 2.64 W/kg
SAR(1 g) = 1.89 W/kg; SAR(10 g) = 1.4 W/kg (SAR corrected for target medium)
Maximum value of SAR (measured) = 2.09 W/kg

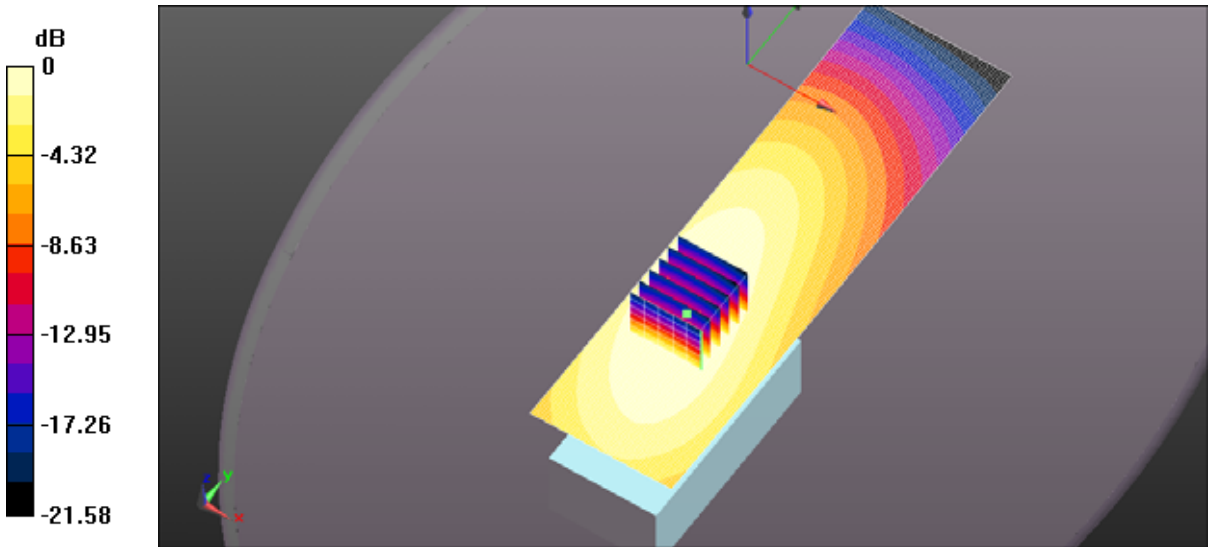

0 dB = 2.17 W/kg = 3.36 dBW/kg

File Name: 420MHz antenna FA-S76UC 520MHz-2026.da52:0

DUT: DUT Sample Brick w. Antenna; Type: Sample; Serial: IMEI Number

Communication System: UID 10000, CW; Frequency: 520 MHz; Duty Cycle: 1:1
Medium parameters used: f = 520 MHz; σ = 0.929 S/m; ε_r = 42.801; ρ = 1000 kg/m^3 ; Phantom section: Flat Section ; Measurement Standard: DASY5 (IEEE/IEC/ANSI C63.19-2007)

DASY Configuration:

- Probe: ES3DV3 - SN3250; ConvF(7.06, 7.06, 7.06); Calibrated: 3/10/2025;
- Sensor-Surface: 3mm (Mechanical Surface Detection)
- Electronics: DAE4 Sn874; Calibrated: 7/29/2025
- Phantom: ELI 4.0; Type: QD OVA 001 BB; Serial: 1057
- DASY52 52.10.0(1446); SEMCAD X 14.6.10(7417)

ICOM 640 420MHz antenna FA-S76 UC 520MHz Head BP316/Head - d=25mm, Pin=5W (ES-Probe)/Area Scan (51x181x1): Interpolated grid: dx=1.500 mm, dy=1.500 mm
Maximum value of SAR (interpolated) = 2.41 W/kg
ICOM 640 420MHz antenna FA-S76 UC 520MHz Head BP316/Head - d=25mm, Pin=5W (ES-Probe)/Zoom Scan (5x5x7) (6x5x7)/Cube 0: Measurement grid: dx=7.5mm, dy=7.5mm, dz=5mm
Reference Value = 44.20 V/m; Power Drift = -0.62 dB
Peak SAR (extrapolated) = 2.87 W/kg
SAR(1 g) = 2.05 W/kg; SAR(10 g) = 1.51 W/kg (SAR corrected for target medium)
Maximum value of SAR (measured) = 2.29 W/kg

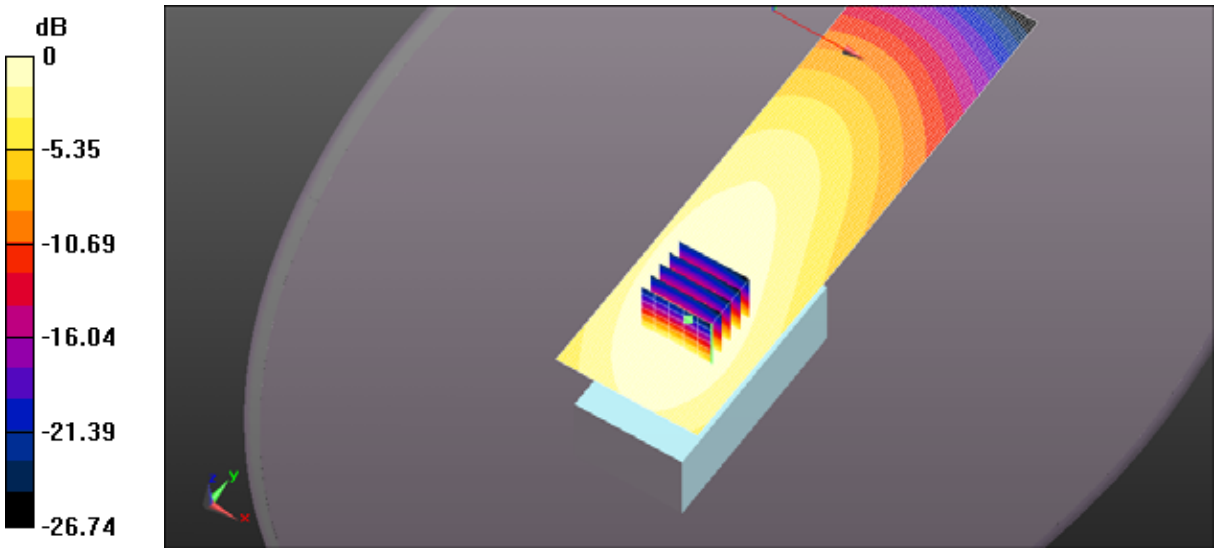

0 dB = 2.41 W/kg = 3.81 dBW/kg

File Name: 440MHz antenna FA-S76UC 415MHz-2026.da52:0

DUT: DUT Sample Brick w. Antenna; Type: Sample; Serial: IMEI Number

Communication System: UID 10000, CW; Frequency: 415 MHz; Duty Cycle: 1:1
Medium parameters used: f = 415 MHz; σ = 0.836 S/m; ε_r = 45.057; ρ = 1000 kg/m^3 ; Phantom section: Flat Section ; Measurement Standard: DASY5 (IEEE/IEC/ANSI C63.19-2007)

DASY Configuration:

- Probe: ES3DV3 - SN3250; ConvF(7.06, 7.06, 7.06); Calibrated: 3/10/2025;
- Sensor-Surface: 3mm (Mechanical Surface Detection)
- Electronics: DAE4 Sn874; Calibrated: 7/29/2025
- Phantom: ELI 4.0; Type: QD OVA 001 BB; Serial: 1057
- DASY52 52.10.0(1446); SEMCAD X 14.6.10(7417)

ICOM 640 440MHz antenna FA-S76 UC 415MHz Head BP316/Head - d=25mm, Pin=5W (ES-Probe)/Area Scan (51x181x1): Interpolated grid: dx=1.500 mm, dy=1.500 mm
Maximum value of SAR (interpolated) = 6.10 W/kg
ICOM 640 440MHz antenna FA-S76 UC 415MHz Head BP316/Head - d=25mm, Pin=5W (ES-Probe)/Zoom Scan (5x5x7) (6x5x7)/Cube 0: Measurement grid: dx=7.5mm, dy=7.5mm, dz=5mm
Reference Value = 77.07 V/m; Power Drift = -0.10 dB
Peak SAR (extrapolated) = 7.45 W/kg
SAR(1 g) = 5.35 W/kg; SAR(10 g) = 4.02 W/kg (SAR corrected for target medium)
Maximum value of SAR (measured) = 5.95 W/kg

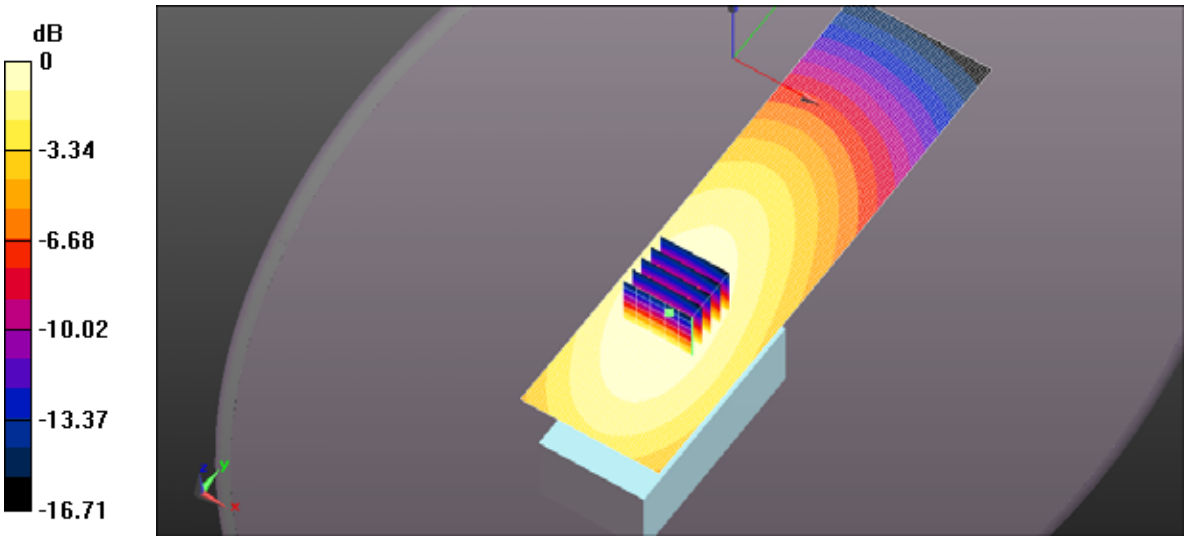

0 dB = 6.10 W/kg = 7.85 dBW/kg

File Name: 440MHz antenna FA-S76UC 450MHz-2026.da52:0

DUT: DUT Sample Brick w. Antenna; Type: Sample; Serial: IMEI Number

Communication System: UID 10000, CW; Frequency: 450 MHz; Duty Cycle: 1:1
Medium parameters used: f = 450 MHz; σ = 0.868 S/m; ε_r = 44.427; ρ = 1000 kg/m^3 ; Phantom section: Flat Section ; Measurement Standard: DASY5 (IEEE/IEC/ANSI C63.19-2007)

DASY Configuration:

- Probe: ES3DV3 - SN3250; ConvF(7.06, 7.06, 7.06); Calibrated: 3/10/2025;
- Sensor-Surface: 3mm (Mechanical Surface Detection)
- Electronics: DAE4 Sn874; Calibrated: 7/29/2025
- Phantom: ELI 4.0; Type: QD OVA 001 BB; Serial: 1057
- DASY52 52.10.0(1446); SEMCAD X 14.6.10(7417)

ICOM 640 440MHz antenna FA-S76 UC 450MHz Head BP316/Head - d=25mm, Pin=5W (ES-Probe)/Area Scan (51x181x1): Interpolated grid: dx=1.500 mm, dy=1.500 mm
Maximum value of SAR (interpolated) = 5.19 W/kg
ICOM 640 440MHz antenna FA-S76 UC 450MHz Head BP316/Head - d=25mm, Pin=5W (ES-Probe)/Zoom Scan (5x5x7) (6x5x7)/Cube 0: Measurement grid: dx=7.5mm, dy=7.5mm, dz=5mm
Reference Value = 69.82 V/m; Power Drift = -0.21 dB
Peak SAR (extrapolated) = 6.47 W/kg
SAR(1 g) = 4.66 W/kg; SAR(10 g) = 3.48 W/kg (SAR corrected for target medium)
Maximum value of SAR (measured) = 5.14 W/kg

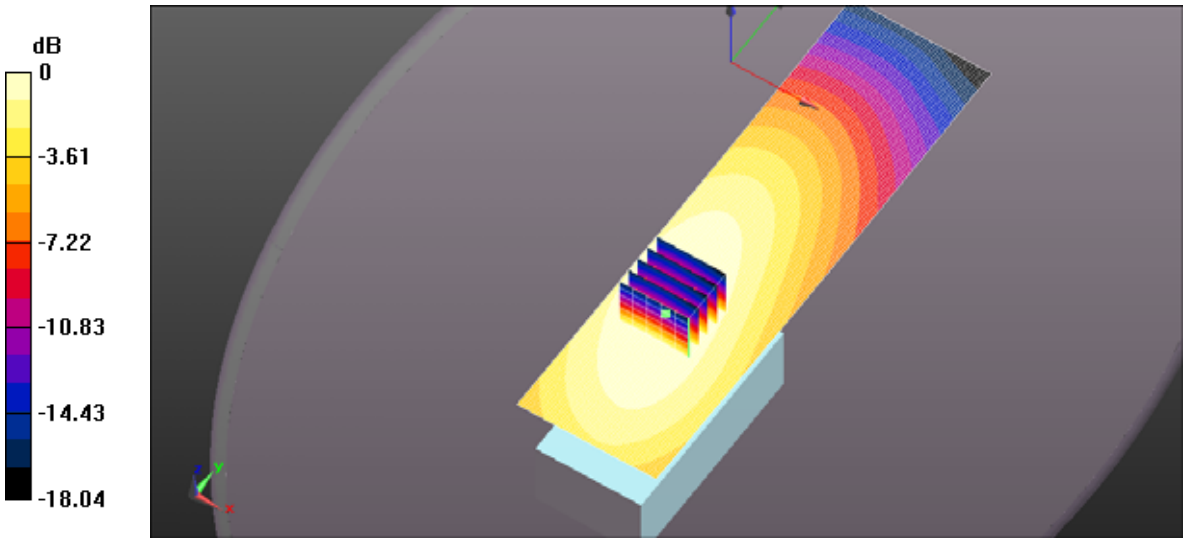

0 dB = 5.19 W/kg = 7.15 dBW/kg

File Name: 440MHz antenna FA-S76UC 485MHz-2026.da52:0

DUT: DUT Sample Brick w. Antenna; Type: Sample; Serial: IMEI Number

Communication System: UID 10000, CW; Frequency: 485 MHz; Duty Cycle: 1:1
Medium parameters used: f = 485 MHz; σ = 0.904 S/m; ε_r = 43.455; ρ = 1000 kg/m^3 ; Phantom section: Flat Section ; Measurement Standard: DASY5 (IEEE/IEC/ANSI C63.19-2007)

DASY Configuration:

- Probe: ES3DV3 - SN3250; ConvF(7.06, 7.06, 7.06); Calibrated: 3/10/2025;
- Sensor-Surface: 3mm (Mechanical Surface Detection)
- Electronics: DAE4 Sn874; Calibrated: 7/29/2025
- Phantom: ELI 4.0; Type: QD OVA 001 BB; Serial: 1057
- DASY52 52.10.0(1446); SEMCAD X 14.6.10(7417)

ICOM 640 440MHz antenna FA-S76 UC 485MHz Head BP316/Head - d=25mm, Pin=5W (ES-Probe)/Area Scan (51x181x1): Interpolated grid: dx=1.500 mm, dy=1.500 mm
Maximum value of SAR (interpolated) = 2.75 W/kg
ICOM 640 440MHz antenna FA-S76 UC 485MHz Head BP316/Head - d=25mm, Pin=5W (ES-Probe)/Zoom Scan (5x5x7) (6x6x7)/Cube 0: Measurement grid: dx=7.5mm, dy=7.5mm, dz=5mm
Reference Value = 49.42 V/m; Power Drift = -0.33 dB
Peak SAR (extrapolated) = 3.36 W/kg
SAR(1 g) = 2.37 W/kg; SAR(10 g) = 1.74 W/kg (SAR corrected for target medium)
Maximum value of SAR (measured) = 2.66 W/kg

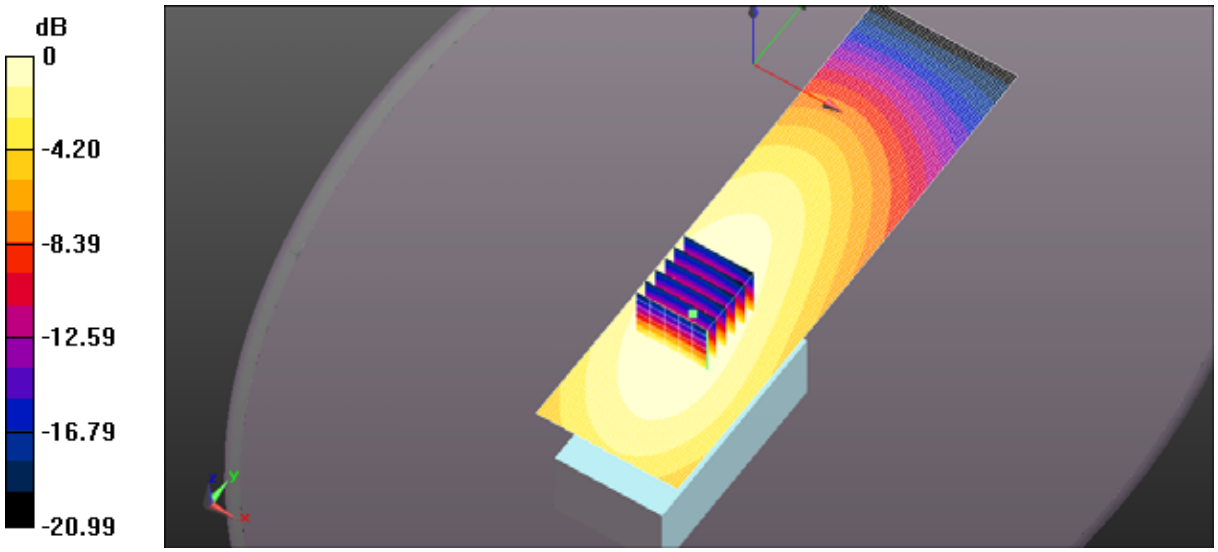

0 dB = 2.75 W/kg = 4.39 dBW/kg

File Name: 440MHz antenna FA-S76UC 520MHz-2026.da52:0

DUT: DUT Sample Brick w. Antenna; Type: Sample; Serial: IMEI Number

Communication System: UID 10000, CW; Frequency: 520 MHz; Duty Cycle: 1:1
Medium parameters used: f = 520 MHz; σ = 0.929 S/m; ε_r = 42.801; ρ = 1000 kg/m^3 ; Phantom section: Flat Section ; Measurement Standard: DASY5 (IEEE/IEC/ANSI C63.19-2007)

DASY Configuration:

- Probe: ES3DV3 - SN3250; ConvF(7.06, 7.06, 7.06); Calibrated: 3/10/2025;
- Sensor-Surface: 3mm (Mechanical Surface Detection)
- Electronics: DAE4 Sn874; Calibrated: 7/29/2025
- Phantom: ELI 4.0; Type: QD OVA 001 BB; Serial: 1057
- DASY52 52.10.0(1446); SEMCAD X 14.6.10(7417)

ICOM 640 440MHz antenna FA-S76 UC 520MHz Head BP316/Head - d=25mm, Pin=5W (ES-Probe)/Area Scan (51x181x1): Interpolated grid: dx=1.500 mm, dy=1.500 mm
Maximum value of SAR (interpolated) = 2.78 W/kg
ICOM 640 440MHz antenna FA-S76 UC 520MHz Head BP316/Head - d=25mm, Pin=5W (ES-Probe)/Zoom Scan (5x5x7) (6x5x7)/Cube 0: Measurement grid: dx=7.5mm, dy=7.5mm, dz=5mm
Reference Value = 48.26 V/m; Power Drift = -0.50 dB
Peak SAR (extrapolated) = 3.39 W/kg
SAR(1 g) = 2.42 W/kg; SAR(10 g) = 1.78 W/kg (SAR corrected for target medium)
Maximum value of SAR (measured) = 2.70 W/kg

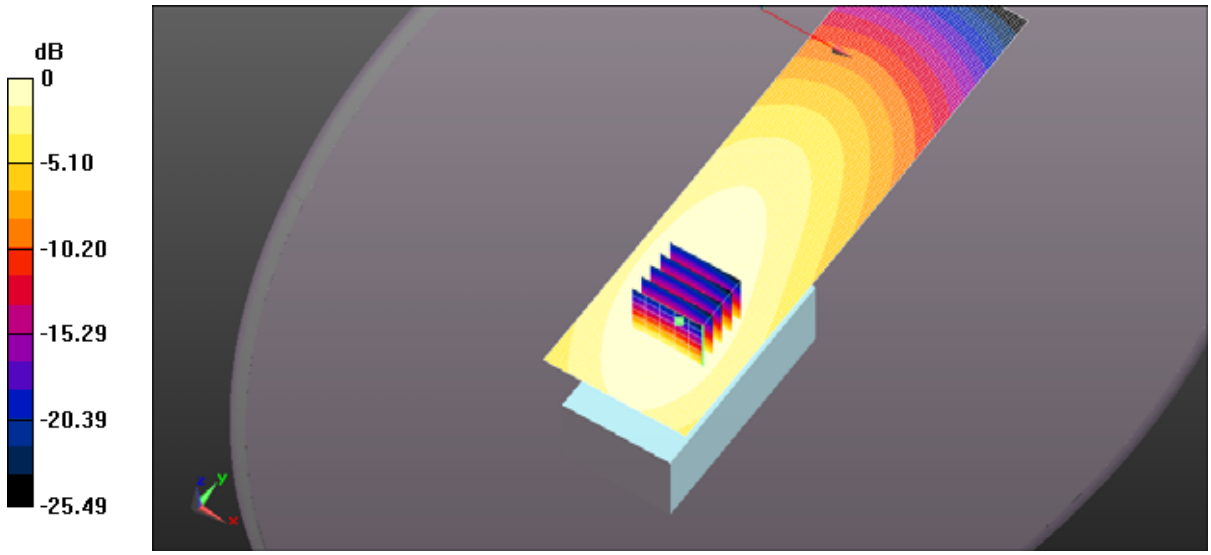

0 dB = 2.78 W/kg = 4.45 dBW/kg

File Name: 460MHz antenna FA-S76UC 415MHz-2026.da52:0

DUT: DUT Sample Brick w. Antenna; Type: Sample; Serial: IMEI Number

Communication System: UID 10000, CW; Frequency: 415 MHz; Duty Cycle: 1:1
Medium parameters used: f = 415 MHz; σ = 0.836 S/m; ε_r = 45.057; ρ = 1000 kg/m^3 ; Phantom section: Flat Section ; Measurement Standard: DASY5 (IEEE/IEC/ANSI C63.19-2007)

DASY Configuration:

- Probe: ES3DV3 - SN3250; ConvF(7.06, 7.06, 7.06); Calibrated: 3/10/2025;
- Sensor-Surface: 3mm (Mechanical Surface Detection)
- Electronics: DAE4 Sn874; Calibrated: 7/29/2025
- Phantom: ELI 4.0; Type: QD OVA 001 BB; Serial: 1057
- DASY52 52.10.0(1446); SEMCAD X 14.6.10(7417)

ICOM 640 460MHz antenna FA-S76 UC 415MHz Head BP316/Head - d=25mm, Pin=5W (ES-Probe)/Area Scan (51x181x1): Interpolated grid: dx=1.500 mm, dy=1.500 mm
Maximum value of SAR (interpolated) = 6.58 W/kg
ICOM 640 460MHz antenna FA-S76 UC 415MHz Head BP316/Head - d=25mm, Pin=5W (ES-Probe)/Zoom Scan (5x5x7) (6x5x7)/Cube 0: Measurement grid: dx=7.5mm, dy=7.5mm, dz=5mm
Reference Value = 82.66 V/m; Power Drift = -0.30 dB
Peak SAR (extrapolated) = 8.06 W/kg
SAR(1 g) = 5.74 W/kg; SAR(10 g) = 4.29 W/kg (SAR corrected for target medium)
Maximum value of SAR (measured) = 6.41 W/kg

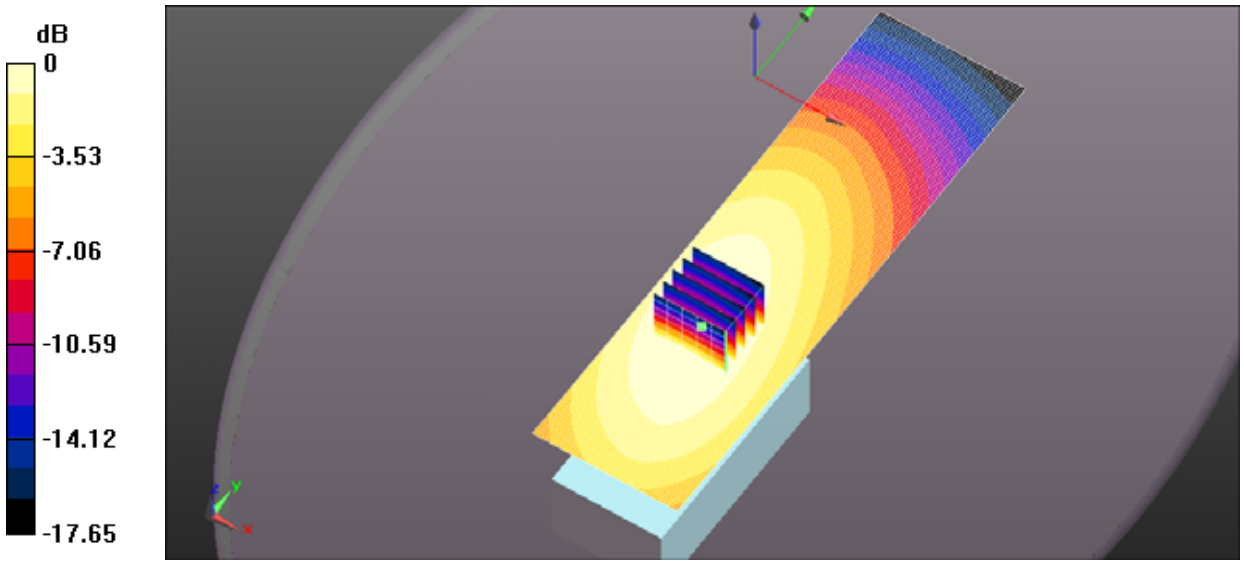

0 dB = 6.58 W/kg = 8.18 dBW/kg

File Name: 460MHz antenna FA-S76UC 450MHz-2026.da52:0

DUT: DUT Sample Brick w. Antenna; Type: Sample; Serial: IMEI Number

Communication System: UID 10000, CW; Frequency: 450 MHz; Duty Cycle: 1:1
Medium parameters used: f = 450 MHz; σ = 0.868 S/m; ε_r = 44.427; ρ = 1000 kg/m^3 ; Phantom section: Flat Section ; Measurement Standard: DASY5 (IEEE/IEC/ANSI C63.19-2007)

DASY Configuration:

- Probe: ES3DV3 - SN3250; ConvF(7.06, 7.06, 7.06); Calibrated: 3/10/2025;
- Sensor-Surface: 3mm (Mechanical Surface Detection)
- Electronics: DAE4 Sn874; Calibrated: 7/29/2025
- Phantom: ELI 4.0; Type: QD OVA 001 BB; Serial: 1057
- DASY52 52.10.0(1446); SEMCAD X 14.6.10(7417)

ICOM 640 460MHz antenna FA-S76 UC 450MHz Head BP316/Head - d=25mm, Pin=5W (ES-Probe)/Area Scan (51x181x1): Interpolated grid: dx=1.500 mm, dy=1.500 mm
Maximum value of SAR (interpolated) = 5.50 W/kg
ICOM 640 460MHz antenna FA-S76 UC 450MHz Head BP316/Head - d=25mm, Pin=5W (ES-Probe)/Zoom Scan (5x5x7) (6x5x7)/Cube 0: Measurement grid: dx=7.5mm, dy=7.5mm, dz=5mm
Reference Value = 73.70 V/m; Power Drift = -0.40 dB
Peak SAR (extrapolated) = 6.74 W/kg
SAR(1 g) = 4.85 W/kg; SAR(10 g) = 3.6 W/kg (SAR corrected for target medium)
Maximum value of SAR (measured) = 5.35 W/kg

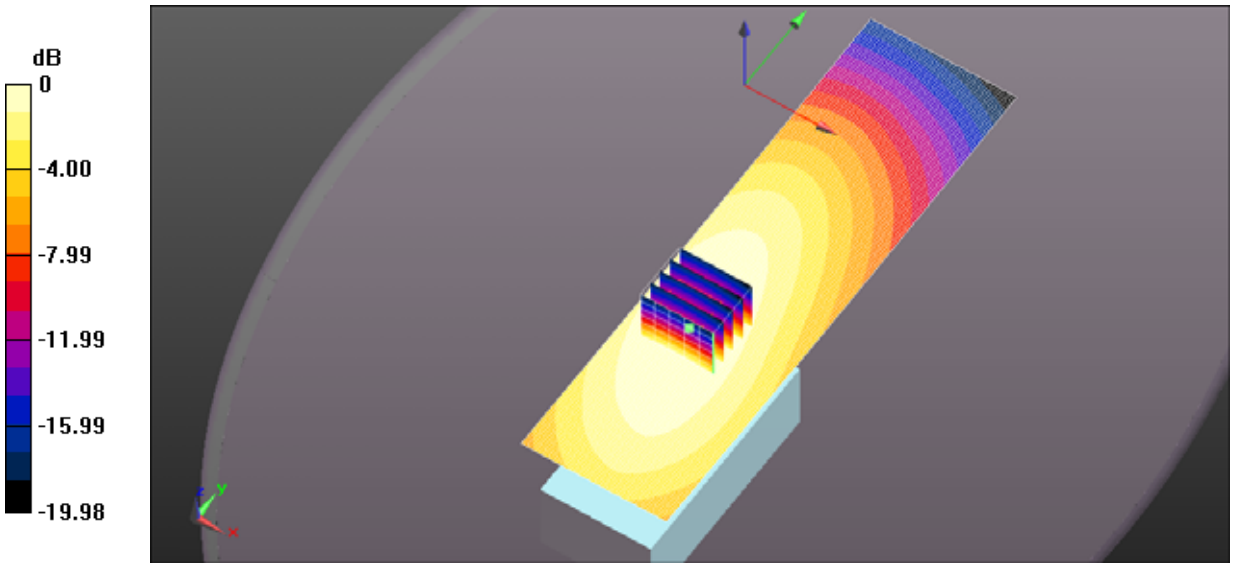

0 dB = 5.50 W/kg = 7.40 dBW/kg

File Name: 460MHz antenna FA-S76UC 485MHz-2026.da52:0

DUT: DUT Sample Brick w. Antenna; Type: Sample; Serial: IMEI Number

Communication System: UID 10000, CW; Frequency: 485 MHz; Duty Cycle: 1:1
Medium parameters used: f = 485 MHz; σ = 0.904 S/m; ε_r = 43.455; ρ = 1000 kg/m^3 ; Phantom section: Flat Section ; Measurement Standard: DASY5 (IEEE/IEC/ANSI C63.19-2007)

DASY Configuration:

- Probe: ES3DV3 - SN3250; ConvF(7.06, 7.06, 7.06); Calibrated: 3/10/2025;
- Sensor-Surface: 3mm (Mechanical Surface Detection)
- Electronics: DAE4 Sn874; Calibrated: 7/29/2025
- Phantom: ELI 4.0; Type: QD OVA 001 BB; Serial: 1057
- DASY52 52.10.0(1446); SEMCAD X 14.6.10(7417)

ICOM 640 460MHz antenna FA-S76 UC 485MHz Head BP316/Head - d=25mm, Pin=5W (ES-Probe)/Area Scan (51x181x1): Interpolated grid: dx=1.500 mm, dy=1.500 mm
Maximum value of SAR (interpolated) = 2.84 W/kg
ICOM 640 460MHz antenna FA-S76 UC 485MHz Head BP316/Head - d=25mm, Pin=5W (ES-Probe)/Zoom Scan (5x5x7) (6x5x7)/Cube 0: Measurement grid: dx=7.5mm, dy=7.5mm, dz=5mm
Reference Value = 47.51 V/m; Power Drift = -0.28 dB
Peak SAR (extrapolated) = 3.53 W/kg
SAR(1 g) = 2.48 W/kg; SAR(10 g) = 1.82 W/kg (SAR corrected for target medium)
Maximum value of SAR (measured) = 2.78 W/kg

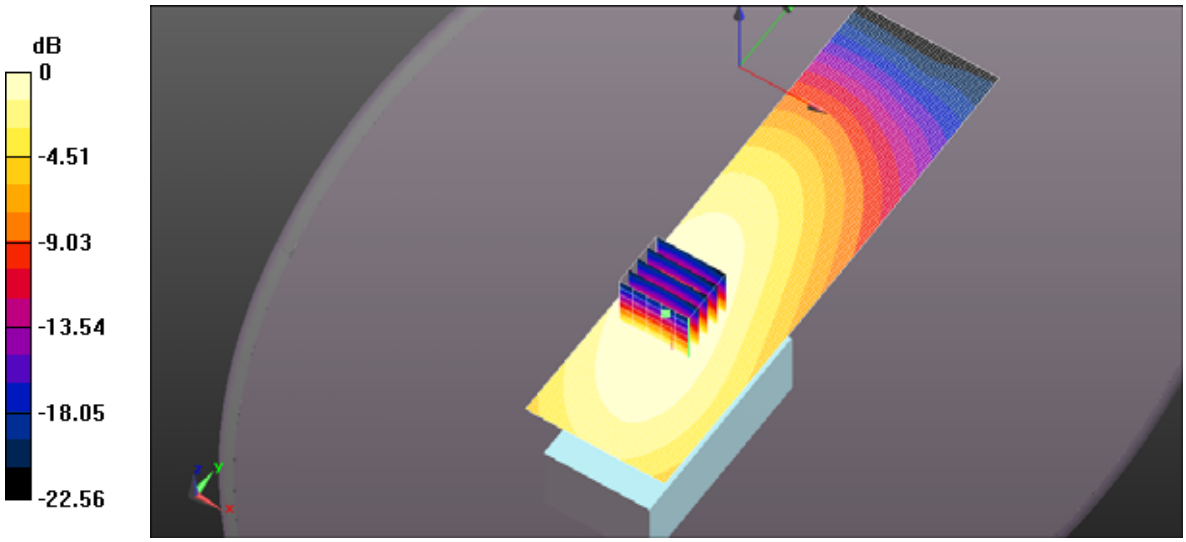

0 dB = 2.84 W/kg = 4.53 dBW/kg

File Name: 460MHz antenna FA-S76UC 520MHz-2026.da52:0

DUT: DUT Sample Brick w. Antenna; Type: Sample; Serial: IMEI Number

Communication System: UID 10000, CW; Frequency: 520 MHz; Duty Cycle: 1:1
Medium parameters used: f = 520 MHz; σ = 0.929 S/m; ε_r = 42.801; ρ = 1000 kg/m^3 ; Phantom section: Flat Section ; Measurement Standard: DASY5 (IEEE/IEC/ANSI C63.19-2007)

DASY Configuration:

- Probe: ES3DV3 - SN3250; ConvF(7.06, 7.06, 7.06); Calibrated: 3/10/2025;
- Sensor-Surface: 3mm (Mechanical Surface Detection)
- Electronics: DAE4 Sn874; Calibrated: 7/29/2025
- Phantom: ELI 4.0; Type: QD OVA 001 BB; Serial: 1057
- DASY52 52.10.0(1446); SEMCAD X 14.6.10(7417)

ICOM 640 460MHz antenna FA-S76 UC 520MHz Head BP316/Head - d=25mm, Pin=5W (ES-Probe)/Area Scan (51x181x1): Interpolated grid: dx=1.500 mm, dy=1.500 mm
Maximum value of SAR (interpolated) = 3.58 W/kg
ICOM 640 460MHz antenna FA-S76 UC 520MHz Head BP316/Head - d=25mm, Pin=5W (ES-Probe)/Zoom Scan (5x5x7) (6x5x7)/Cube 0: Measurement grid: dx=7.5mm, dy=7.5mm, dz=5mm
Reference Value = 54.04 V/m; Power Drift = -0.53 dB
Peak SAR (extrapolated) = 4.29 W/kg
SAR(1 g) = 3.06 W/kg; SAR(10 g) = 2.25 W/kg (SAR corrected for target medium)
Maximum value of SAR (measured) = 3.43 W/kg

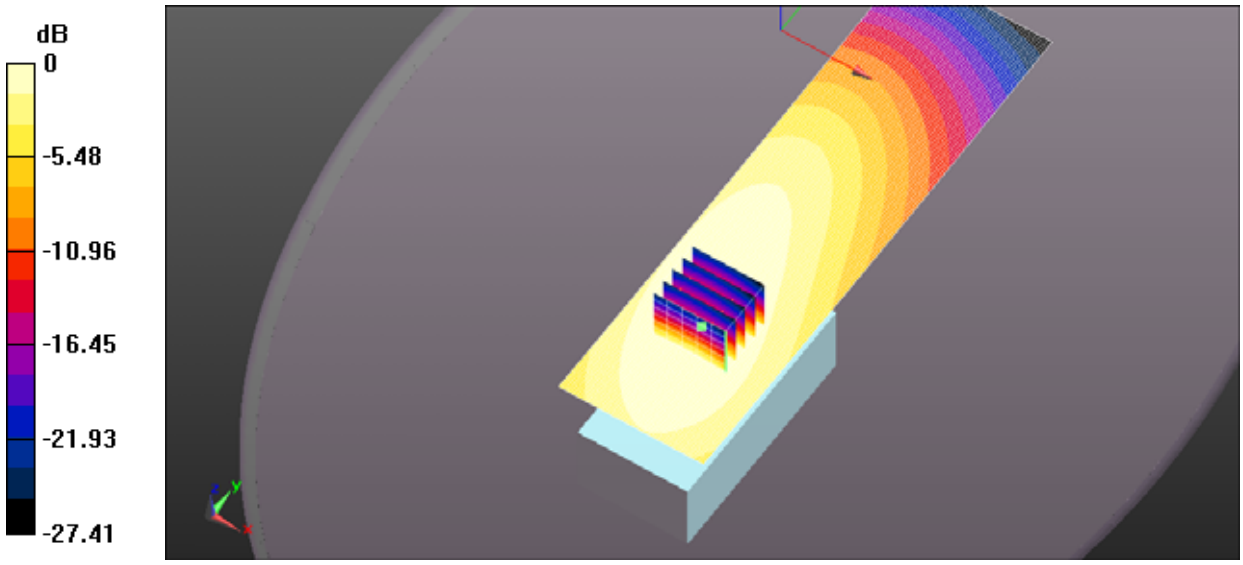

0 dB = 3.58 W/kg = 5.54 dBW/kg

File Name: 480MHz antenna FA-S76UC 415MHz-2026.da52:0

DUT: DUT Sample Brick w. Antenna; Type: Sample; Serial: IMEI Number

Communication System: UID 10000, CW; Frequency: 415 MHz; Duty Cycle: 1:1
Medium parameters used: f = 415 MHz; σ = 0.836 S/m; ε_r = 45.057; ρ = 1000 kg/m^3 ; Phantom section: Flat Section ; Measurement Standard: DASY5 (IEEE/IEC/ANSI C63.19-2007)

DASY Configuration:

- Probe: ES3DV3 - SN3250; ConvF(7.06, 7.06, 7.06); Calibrated: 3/10/2025;
- Sensor-Surface: 3mm (Mechanical Surface Detection)
- Electronics: DAE4 Sn874; Calibrated: 7/29/2025
- Phantom: ELI 4.0; Type: QD OVA 001 BB; Serial: 1057
- DASY52 52.10.0(1446); SEMCAD X 14.6.10(7417)

ICOM 640 480MHz antenna FA-S76 UC 415MHz Head BP316/Head - d=25mm, Pin=5W (ES-Probe)/Area Scan (51x181x1): Interpolated grid: dx=1.500 mm, dy=1.500 mm
Maximum value of SAR (interpolated) = 6.10 W/kg
ICOM 640 480MHz antenna FA-S76 UC 415MHz Head BP316/Head - d=25mm, Pin=5W (ES-Probe)/Zoom Scan (5x5x7) (6x5x7)/Cube 0: Measurement grid: dx=7.5mm, dy=7.5mm, dz=5mm
Reference Value = 77.14 V/m; Power Drift = -0.46 dB
Peak SAR (extrapolated) = 7.42 W/kg
SAR(1 g) = 5.3 W/kg; SAR(10 g) = 3.96 W/kg (SAR corrected for target medium)
Maximum value of SAR (measured) = 5.91 W/kg

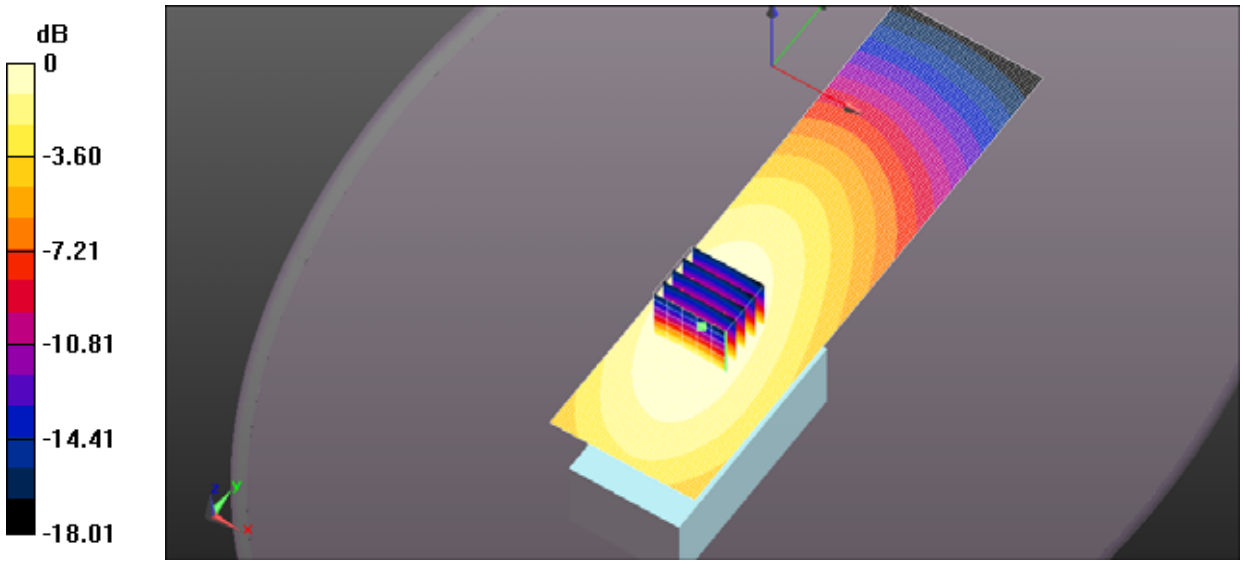

0 dB = 6.10 W/kg = 7.85 dBW/kg

File Name: 480MHz antenna FA-S76UC 450MHz-2026.da52:0

DUT: DUT Sample Brick w. Antenna; Type: Sample; Serial: IMEI Number

Communication System: UID 10000, CW; Frequency: 450 MHz; Duty Cycle: 1:1
Medium parameters used: f = 450 MHz; σ = 0.868 S/m; ε_r = 44.427; ρ = 1000 kg/m^3 ; Phantom section: Flat Section ; Measurement Standard: DASY5 (IEEE/IEC/ANSI C63.19-2007)

DASY Configuration:

- Probe: ES3DV3 - SN3250; ConvF(7.06, 7.06, 7.06); Calibrated: 3/10/2025;
- Sensor-Surface: 3mm (Mechanical Surface Detection)
- Electronics: DAE4 Sn874; Calibrated: 7/29/2025
- Phantom: ELI 4.0; Type: QD OVA 001 BB; Serial: 1057
- DASY52 52.10.0(1446); SEMCAD X 14.6.10(7417)

ICOM 640 480MHz antenna FA-S76 UC 450MHz Head BP316/Head - d=25mm, Pin=5W (ES-Probe)/Area Scan (51x181x1): Interpolated grid: dx=1.500 mm, dy=1.500 mm
Maximum value of SAR (interpolated) = 5.54 W/kg
ICOM 640 480MHz antenna FA-S76 UC 450MHz Head BP316/Head - d=25mm, Pin=5W (ES-Probe)/Zoom Scan (5x5x7) (6x5x7)/Cube 0: Measurement grid: dx=7.5mm, dy=7.5mm, dz=5mm
Reference Value = 69.00 V/m; Power Drift = -0.16 dB
Peak SAR (extrapolated) = 6.59 W/kg
SAR(1 g) = 4.75 W/kg; SAR(10 g) = 3.54 W/kg (SAR corrected for target medium)
Maximum value of SAR (measured) = 5.24 W/kg

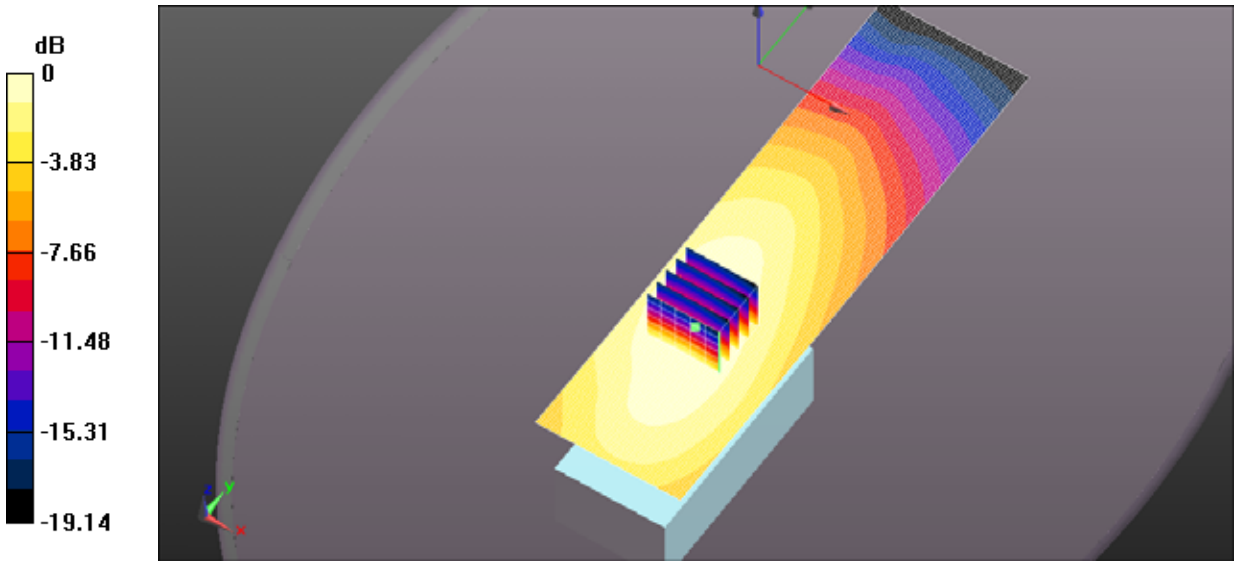

0 dB = 5.54 W/kg = 7.44 dBW/kg

File Name: 480MHz antenna FA-S76UC 485MHz-2026.da52:0

DUT: DUT Sample Brick w. Antenna; Type: Sample; Serial: IMEI Number

Communication System: UID 10000, CW; Frequency: 485 MHz; Duty Cycle: 1:1
Medium parameters used: f = 485 MHz; σ = 0.904 S/m; ε_r = 43.455; ρ = 1000 kg/m^3 ; Phantom section: Flat Section ; Measurement Standard: DASY5 (IEEE/IEC/ANSI C63.19-2007)

DASY Configuration:

- Probe: ES3DV3 - SN3250; ConvF(7.06, 7.06, 7.06); Calibrated: 3/10/2025;
- Sensor-Surface: 3mm (Mechanical Surface Detection)
- Electronics: DAE4 Sn874; Calibrated: 7/29/2025
- Phantom: ELI 4.0; Type: QD OVA 001 BB; Serial: 1057
- DASY52 52.10.0(1446); SEMCAD X 14.6.10(7417)

ICOM 640 480MHz antenna FA-S76 UC 485MHz Head BP316/Head - d=25mm, Pin=5W (ES-Probe)/Area Scan (51x181x1): Interpolated grid: dx=1.500 mm, dy=1.500 mm
Maximum value of SAR (interpolated) = 4.15 W/kg
ICOM 640 480MHz antenna FA-S76 UC 485MHz Head BP316/Head - d=25mm, Pin=5W (ES-Probe)/Zoom Scan (5x5x7) (6x5x7)/Cube 0: Measurement grid: dx=7.5mm, dy=7.5mm, dz=5mm
Reference Value = 59.35 V/m; Power Drift = -0.24 dB
Peak SAR (extrapolated) = 5.13 W/kg
SAR(1 g) = 3.64 W/kg; SAR(10 g) = 2.68 W/kg (SAR corrected for target medium)
Maximum value of SAR (measured) = 4.07 W/kg

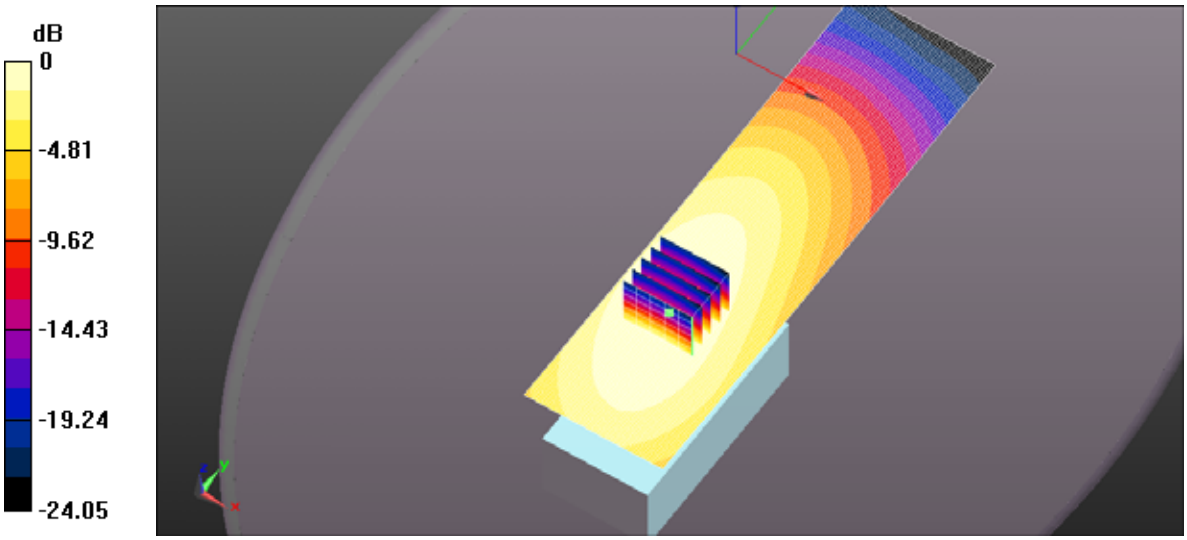

0 dB = 4.15 W/kg = 6.18 dBW/kg

File Name: 480MHz antenna FA-S76UC 520MHz-2026.da52:0

DUT: DUT Sample Brick w. Antenna; Type: Sample; Serial: IMEI Number

Communication System: UID 10000, CW; Frequency: 520 MHz; Duty Cycle: 1:1
Medium parameters used: f = 520 MHz; σ = 0.929 S/m; ε_r = 42.801; ρ = 1000 kg/m^3 ; Phantom section: Flat Section ; Measurement Standard: DASY5 (IEEE/IEC/ANSI C63.19-2007)

DASY Configuration:

- Probe: ES3DV3 - SN3250; ConvF(7.06, 7.06, 7.06); Calibrated: 3/10/2025;
- Sensor-Surface: 3mm (Mechanical Surface Detection)
- Electronics: DAE4 Sn874; Calibrated: 7/29/2025
- Phantom: ELI 4.0; Type: QD OVA 001 BB; Serial: 1057
- DASY52 52.10.0(1446); SEMCAD X 14.6.10(7417)

ICOM 640 480MHz antenna FA-S76 UC 520MHz Head BP316/Head - d=25mm, Pin=5W (ES-Probe)/Area Scan (51x181x1): Interpolated grid: dx=1.500 mm, dy=1.500 mm
Maximum value of SAR (interpolated) = 4.75 W/kg
ICOM 640 480MHz antenna FA-S76 UC 520MHz Head BP316/Head - d=25mm, Pin=5W (ES-Probe)/Zoom Scan (5x5x7) (6x5x7)/Cube 0: Measurement grid: dx=7.5mm, dy=7.5mm, dz=5mm
Reference Value = 61.30 V/m; Power Drift = -0.47 dB
Peak SAR (extrapolated) = 5.72 W/kg
SAR(1 g) = 4.09 W/kg; SAR(10 g) = 3.02 W/kg (SAR corrected for target medium)
Maximum value of SAR (measured) = 4.58 W/kg

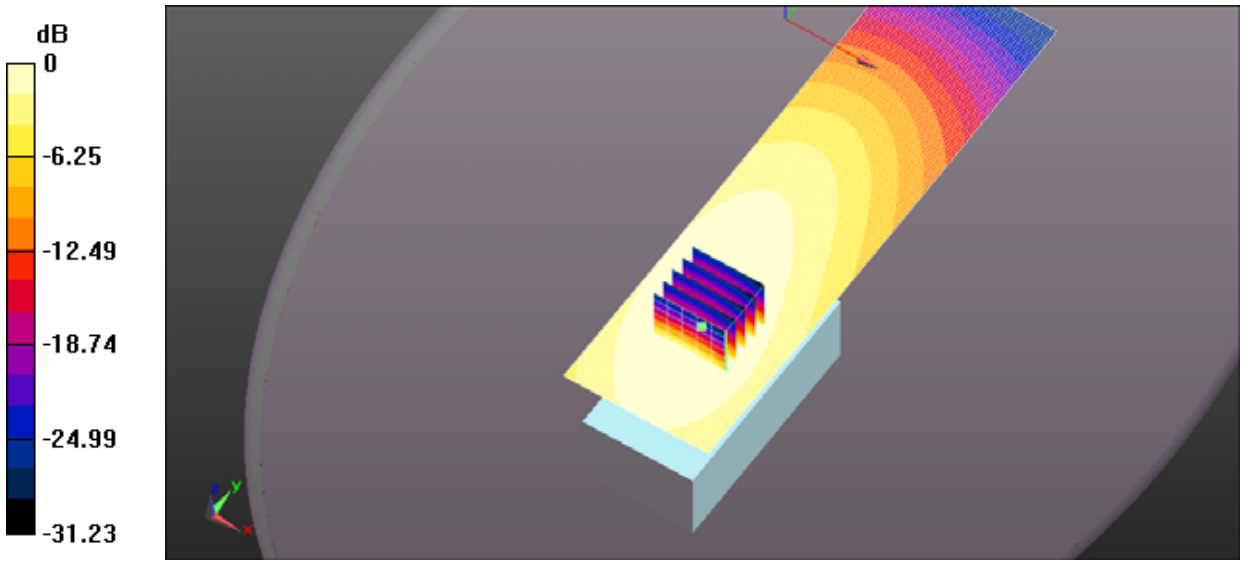

0 dB = 4.75 W/kg = 6.76 dBW/kg

File Name: 500MHz antenna FA-S76UC 450MHz-2026.da52:0

DUT: DUT Sample Brick w. Antenna; Type: Sample; Serial: IMEI Number

Communication System: UID 10000, CW; Frequency: 450 MHz; Duty Cycle: 1:1
Medium parameters used: f = 450 MHz; σ = 0.868 S/m; ε_r = 44.427; ρ = 1000 kg/m^3 ; Phantom section: Flat Section ; Measurement Standard: DASY5 (IEEE/IEC/ANSI C63.19-2007)

DASY Configuration:

- Probe: ES3DV3 - SN3250; ConvF(7.06, 7.06, 7.06); Calibrated: 3/10/2025;
- Sensor-Surface: 3mm (Mechanical Surface Detection)
- Electronics: DAE4 Sn874; Calibrated: 7/29/2025
- Phantom: ELI 4.0; Type: QD OVA 001 BB; Serial: 1057
- DASY52 52.10.0(1446); SEMCAD X 14.6.10(7417)

ICOM 640 500MHz antenna FA-S76 UC 450MHz Head BP316/Head - d=25mm, Pin=5W (ES-Probe)/Area Scan (51x181x1): Interpolated grid: dx=1.500 mm, dy=1.500 mm
Maximum value of SAR (interpolated) = 4.05 W/kg
ICOM 640 500MHz antenna FA-S76 UC 450MHz Head BP316/Head - d=25mm, Pin=5W (ES-Probe)/Zoom Scan (5x5x7) (6x5x7)/Cube 0: Measurement grid: dx=7.5mm, dy=7.5mm, dz=5mm
Reference Value = 61.56 V/m; Power Drift = -0.19 dB
Peak SAR (extrapolated) = 5.05 W/kg
SAR(1 g) = 3.63 W/kg; SAR(10 g) = 2.7 W/kg (SAR corrected for target medium)
Maximum value of SAR (measured) = 4.01 W/kg

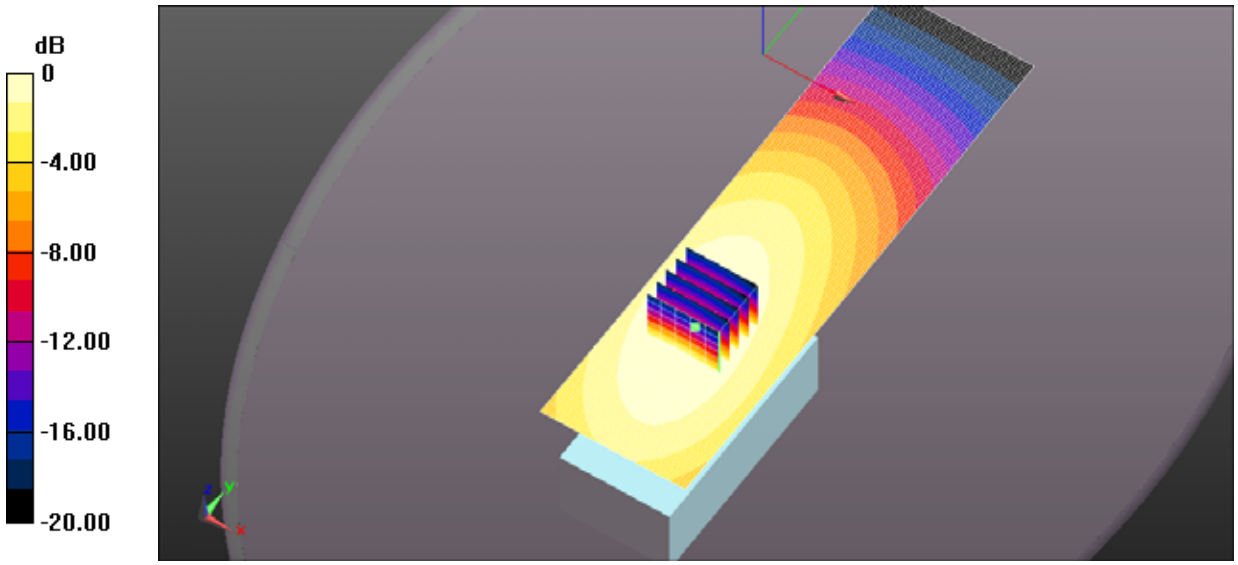

0 dB = 4.05 W/kg = 6.08 dBW/kg

File Name: 500MHz antenna FA-S76UC 415MHz-2026.da52:0

DUT: DUT Sample Brick w. Antenna; Type: Sample; Serial: IMEI Number

Communication System: UID 10000, CW; Frequency: 415 MHz; Duty Cycle: 1:1
Medium parameters used: f = 415 MHz; σ = 0.836 S/m; ε_r = 45.057; ρ = 1000 kg/m^3 ; Phantom section: Flat Section ; Measurement Standard: DASY5 (IEEE/IEC/ANSI C63.19-2007)

DASY Configuration:

- Probe: ES3DV3 - SN3250; ConvF(7.06, 7.06, 7.06); Calibrated: 3/10/2025;
- Sensor-Surface: 3mm (Mechanical Surface Detection)
- Electronics: DAE4 Sn874; Calibrated: 7/29/2025
- Phantom: ELI 4.0; Type: QD OVA 001 BB; Serial: 1057
- DASY52 52.10.0(1446); SEMCAD X 14.6.10(7417)

ICOM 640 500MHz antenna FA-S76 UC 415MHz Head BP316/Head - d=25mm, Pin=5W (ES-Probe)/Area Scan (51x181x1): Interpolated grid: dx=1.500 mm, dy=1.500 mm
Maximum value of SAR (interpolated) = 5.47 W/kg
ICOM 640 500MHz antenna FA-S76 UC 415MHz Head BP316/Head - d=25mm, Pin=5W (ES-Probe)/Zoom Scan (5x5x7) (6x5x7)/Cube 0: Measurement grid: dx=7.5mm, dy=7.5mm, dz=5mm
Reference Value = 73.18 V/m; Power Drift = -0.46 dB
Peak SAR (extrapolated) = 6.67 W/kg
SAR(1 g) = 4.77 W/kg; SAR(10 g) = 3.56 W/kg (SAR corrected for target medium)
Maximum value of SAR (measured) = 5.32 W/kg

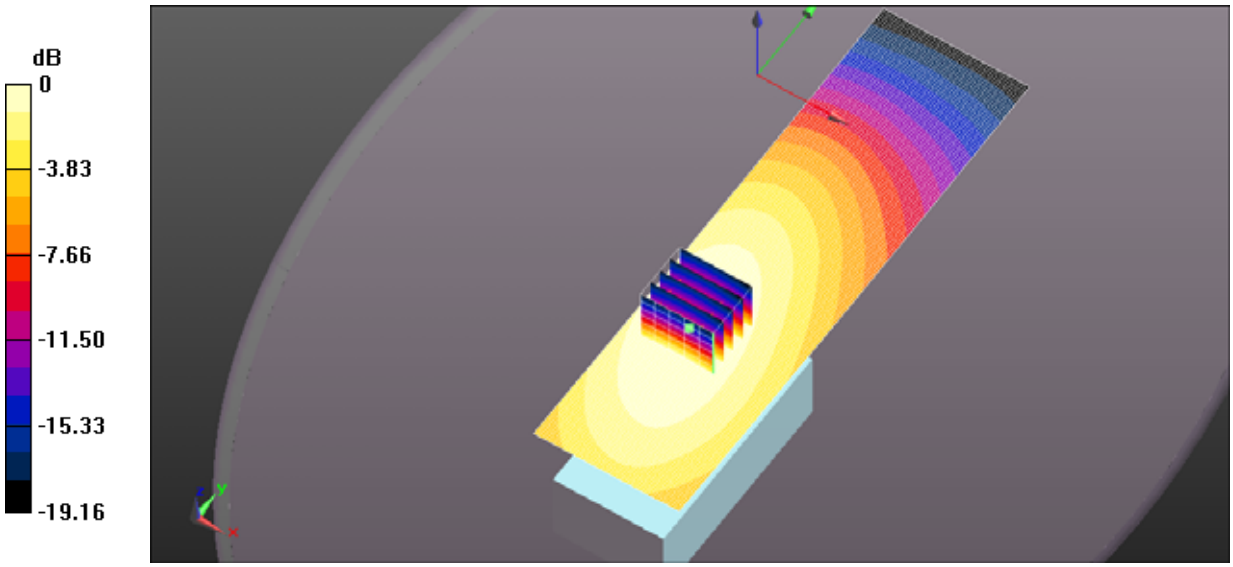

0 dB = 5.47 W/kg = 7.38 dBW/kg

File Name: 500MHz antenna FA-S76UC 485MHz-2026.da52:0

DUT: DUT Sample Brick w. Antenna; Type: Sample; Serial: IMEI Number

Communication System: UID 10000, CW; Frequency: 485 MHz; Duty Cycle: 1:1
Medium parameters used: f = 485 MHz; σ = 0.904 S/m; ε_r = 43.455; ρ = 1000 kg/m^3 ; Phantom section: Flat Section ; Measurement Standard: DASY5 (IEEE/IEC/ANSI C63.19-2007)

DASY Configuration:

- Probe: ES3DV3 - SN3250; ConvF(7.06, 7.06, 7.06); Calibrated: 3/10/2025;
- Sensor-Surface: 3mm (Mechanical Surface Detection)
- Electronics: DAE4 Sn874; Calibrated: 7/29/2025
- Phantom: ELI 4.0; Type: QD OVA 001 BB; Serial: 1057
- DASY52 52.10.0(1446); SEMCAD X 14.6.10(7417)

ICOM 640 500MHz antenna FA-S76 UC 485MHz Head BP316/Head - d=25mm, Pin=5W (ES-Probe)/Area Scan (51x181x1): Interpolated grid: dx=1.500 mm, dy=1.500 mm
Maximum value of SAR (interpolated) = 4.67 W/kg
ICOM 640 500MHz antenna FA-S76 UC 485MHz Head BP316/Head - d=25mm, Pin=5W (ES-Probe)/Zoom Scan (5x5x7) (6x5x7)/Cube 0: Measurement grid: dx=7.5mm, dy=7.5mm, dz=5mm
Reference Value = 61.10 V/m; Power Drift = -0.15 dB
Peak SAR (extrapolated) = 5.77 W/kg
SAR(1 g) = 4.08 W/kg; SAR(10 g) = 3.02 W/kg (SAR corrected for target medium)
Maximum value of SAR (measured) = 4.57 W/kg

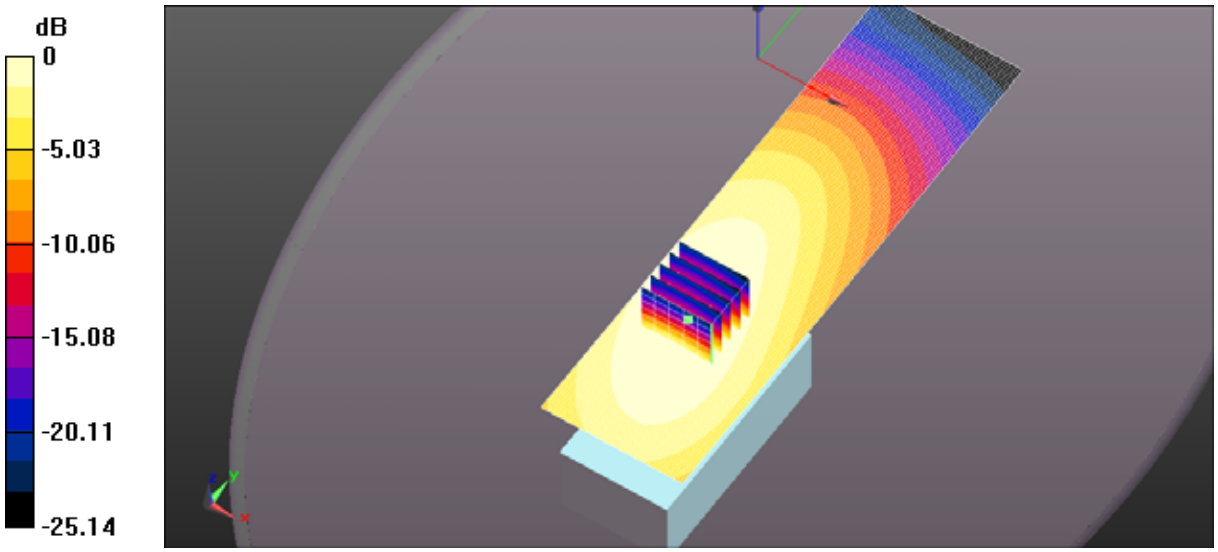

0 dB = 4.67 W/kg = 6.69 dBW/kg

File Name: 500MHz antenna FA-S76UC 520MHz-2026.da52:0

DUT: DUT Sample Brick w. Antenna; Type: Sample; Serial: IMEI Number

Communication System: UID 10000, CW; Frequency: 520 MHz; Duty Cycle: 1:1
Medium parameters used: f = 520 MHz; σ = 0.929 S/m; ε_r = 42.801; ρ = 1000 kg/m^3 ; Phantom section: Flat Section ; Measurement Standard: DASY5 (IEEE/IEC/ANSI C63.19-2007)

DASY Configuration:

- Probe: ES3DV3 - SN3250; ConvF(7.06, 7.06, 7.06); Calibrated: 3/10/2025;
- Sensor-Surface: 3mm (Mechanical Surface Detection)
- Electronics: DAE4 Sn874; Calibrated: 7/29/2025
- Phantom: ELI 4.0; Type: QD OVA 001 BB; Serial: 1057
- DASY52 52.10.0(1446); SEMCAD X 14.6.10(7417)

ICOM 640 500MHz antenna FA-S76 UC 520MHz Head BP316/Head - d=25mm, Pin=5W (ES-Probe)/Area Scan (51x181x1): Interpolated grid: dx=1.500 mm, dy=1.500 mm
Maximum value of SAR (interpolated) = 5.84 W/kg
ICOM 640 500MHz antenna FA-S76 UC 520MHz Head BP316/Head - d=25mm, Pin=5W (ES-Probe)/Zoom Scan (5x5x7) (6x5x7)/Cube 0: Measurement grid: dx=7.5mm, dy=7.5mm, dz=5mm
Reference Value = 73.06 V/m; Power Drift = -0.39 dB
Peak SAR (extrapolated) = 7.11 W/kg
SAR(1 g) = 5.08 W/kg; SAR(10 g) = 3.74 W/kg (SAR corrected for target medium)
Maximum value of SAR (measured) = 5.69 W/kg

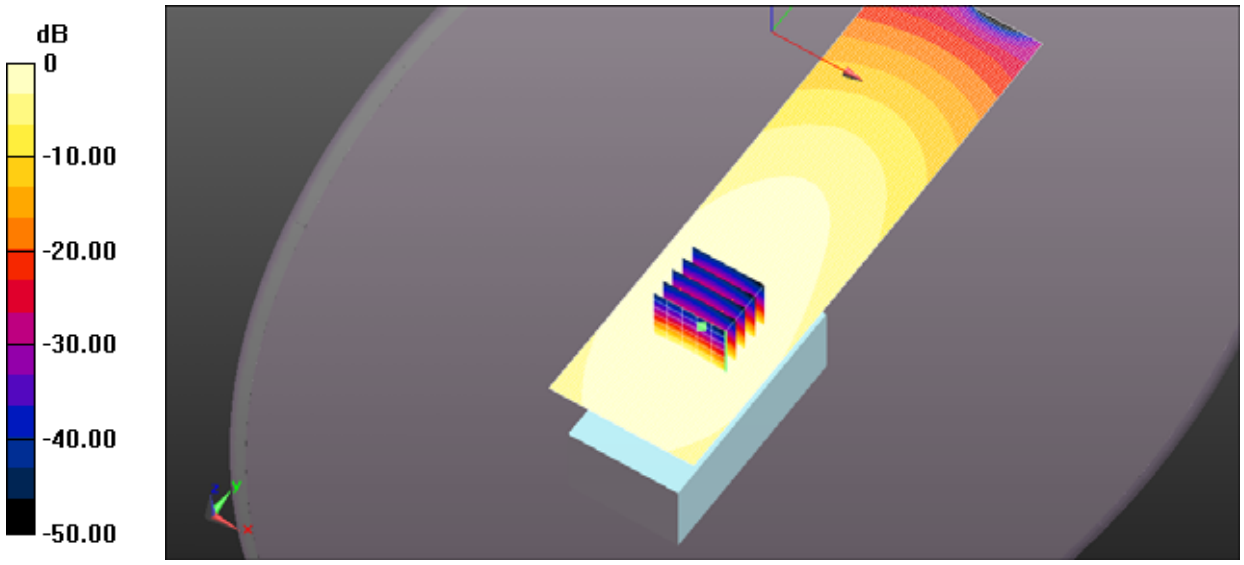

0 dB = 5.84 W/kg = 7.66 dBW/kg

File Name: 520MHz antenna FA-S76UC 415MHz-2026.da52:0

DUT: DUT Sample Brick w. Antenna; Type: Sample; Serial: IMEI Number

Communication System: UID 10000, CW; Frequency: 415 MHz; Duty Cycle: 1:1
Medium parameters used: f = 415 MHz; σ = 0.836 S/m; ε_r = 45.057; ρ = 1000 kg/m^3 ; Phantom section: Flat Section ; Measurement Standard: DASY5 (IEEE/IEC/ANSI C63.19-2007)

DASY Configuration:

- Probe: ES3DV3 - SN3250; ConvF(7.06, 7.06, 7.06); Calibrated: 3/10/2025;
- Sensor-Surface: 3mm (Mechanical Surface Detection)
- Electronics: DAE4 Sn874; Calibrated: 7/29/2025
- Phantom: ELI 4.0; Type: QD OVA 001 BB; Serial: 1057
- DASY52 52.10.0(1446); SEMCAD X 14.6.10(7417)

ICOM 640 520MHz antenna FA-S76 UC 415MHz Head BP316/Head - d=25mm, Pin=5W (ES-Probe)/Area Scan (51x181x1): Interpolated grid: dx=1.500 mm, dy=1.500 mm
Maximum value of SAR (interpolated) = 3.95 W/kg
ICOM 640 520MHz antenna FA-S76 UC 415MHz Head BP316/Head - d=25mm, Pin=5W (ES-Probe)/Zoom Scan (5x5x7) (6x5x7)/Cube 0: Measurement grid: dx=7.5mm, dy=7.5mm, dz=5mm
Reference Value = 65.10 V/m; Power Drift = -0.49 dB
Peak SAR (extrapolated) = 4.86 W/kg
SAR(1 g) = 3.44 W/kg; SAR(10 g) = 2.57 W/kg (SAR corrected for target medium)
Maximum value of SAR (measured) = 3.83 W/kg

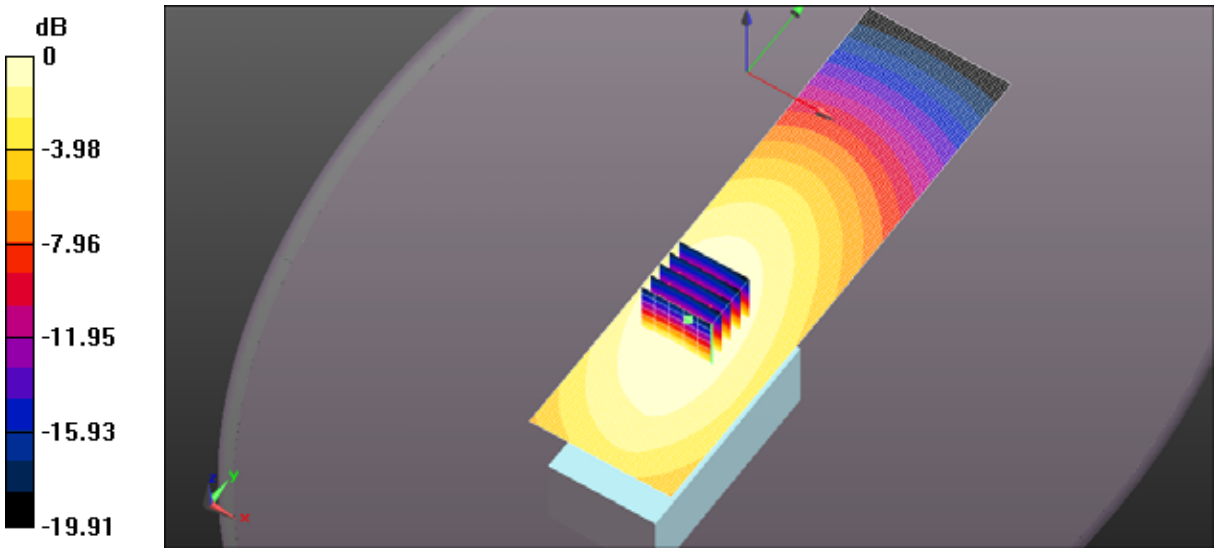

0 dB = 3.95 W/kg = 5.97 dBW/kg

File Name: 520MHz antenna FA-S76UC 450MHz-2026.da52:0

DUT: DUT Sample Brick w. Antenna; Type: Sample; Serial: IMEI Number

Communication System: UID 10000, CW; Frequency: 450 MHz; Duty Cycle: 1:1
Medium parameters used: f = 450 MHz; σ = 0.868 S/m; ε_r = 44.427; ρ = 1000 kg/m^3 ; Phantom section: Flat Section ; Measurement Standard: DASY5 (IEEE/IEC/ANSI C63.19-2007)

DASY Configuration:

- Probe: ES3DV3 - SN3250; ConvF(7.06, 7.06, 7.06); Calibrated: 3/10/2025;
- Sensor-Surface: 3mm (Mechanical Surface Detection)
- Electronics: DAE4 Sn874; Calibrated: 7/29/2025
- Phantom: ELI 4.0; Type: QD OVA 001 BB; Serial: 1057
- DASY52 52.10.0(1446); SEMCAD X 14.6.10(7417)

ICOM 640 520MHz antenna FA-S76 UC 450MHz Head BP316/Head - d=25mm, Pin=5W (ES-Probe)/Area Scan (51x181x1): Interpolated grid: dx=1.500 mm, dy=1.500 mm
Maximum value of SAR (interpolated) = 3.96 W/kg
ICOM 640 520MHz antenna FA-S76 UC 450MHz Head BP316/Head - d=25mm, Pin=5W (ES-Probe)/Zoom Scan (5x5x7) (6x5x7)/Cube 0: Measurement grid: dx=7.5mm, dy=7.5mm, dz=5mm
Reference Value = 54.71 V/m; Power Drift = -0.32 dB
Peak SAR (extrapolated) = 4.76 W/kg
SAR(1 g) = 3.4 W/kg; SAR(10 g) = 2.52 W/kg (SAR corrected for target medium)
Maximum value of SAR (measured) = 3.78 W/kg

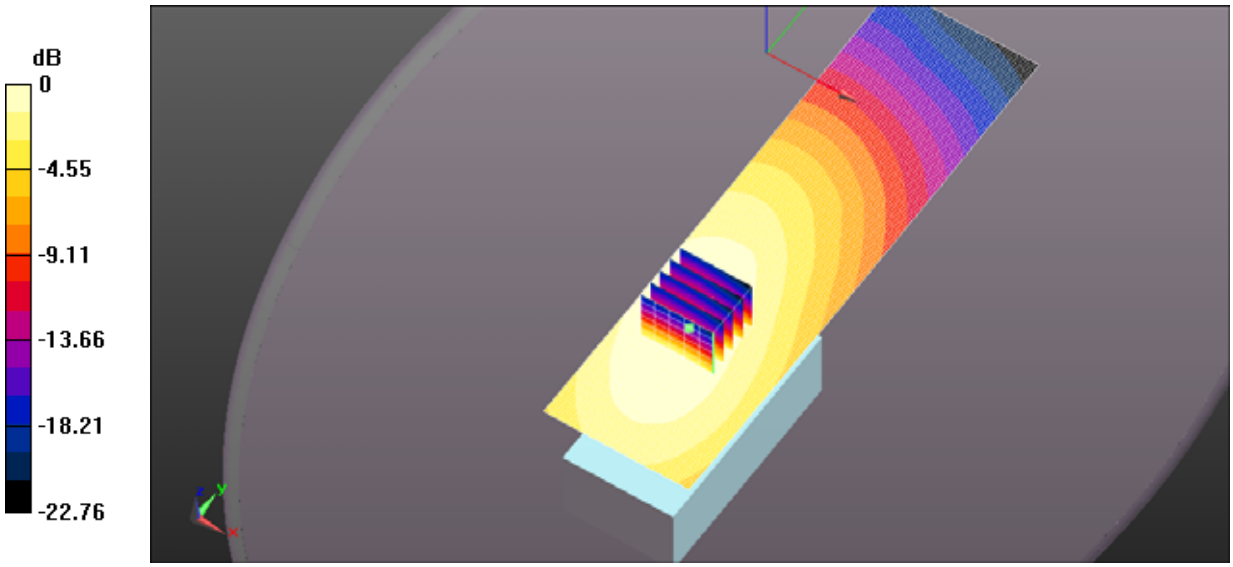

0 dB = 3.96 W/kg = 5.98 dBW/kg

File Name: 520MHz antenna FA-S76UC 485MHz-2026.da52:0

DUT: DUT Sample Brick w. Antenna; Type: Sample; Serial: IMEI Number

Communication System: UID 10000, CW; Frequency: 485 MHz; Duty Cycle: 1:1
Medium parameters used: f = 485 MHz; σ = 0.904 S/m; ε_r = 43.455; ρ = 1000 kg/m^3 ; Phantom section: Flat Section ; Measurement Standard: DASY5 (IEEE/IEC/ANSI C63.19-2007)

DASY Configuration:

- Probe: ES3DV3 - SN3250; ConvF(7.06, 7.06, 7.06); Calibrated: 3/10/2025;
- Sensor-Surface: 3mm (Mechanical Surface Detection)
- Electronics: DAE4 Sn874; Calibrated: 7/29/2025
- Phantom: ELI 4.0; Type: QD OVA 001 BB; Serial: 1057
- DASY52 52.10.0(1446); SEMCAD X 14.6.10(7417)

ICOM 640 520MHz antenna FA-S76 UC 485MHz Head BP316/Head - d=25mm, Pin=5W (ES-Probe)/Area Scan (51x181x1): Interpolated grid: dx=1.500 mm, dy=1.500 mm
Maximum value of SAR (interpolated) = 4.89 W/kg
ICOM 640 520MHz antenna FA-S76 UC 485MHz Head BP316/Head - d=25mm, Pin=5W (ES-Probe)/Zoom Scan (5x5x7) (6x5x7)/Cube 0: Measurement grid: dx=7.5mm, dy=7.5mm, dz=5mm
Reference Value = 61.07 V/m; Power Drift = -0.33 dB
Peak SAR (extrapolated) = 6.01 W/kg
SAR(1 g) = 4.22 W/kg; SAR(10 g) = 3.09 W/kg (SAR corrected for target medium)
Maximum value of SAR (measured) = 4.75 W/kg

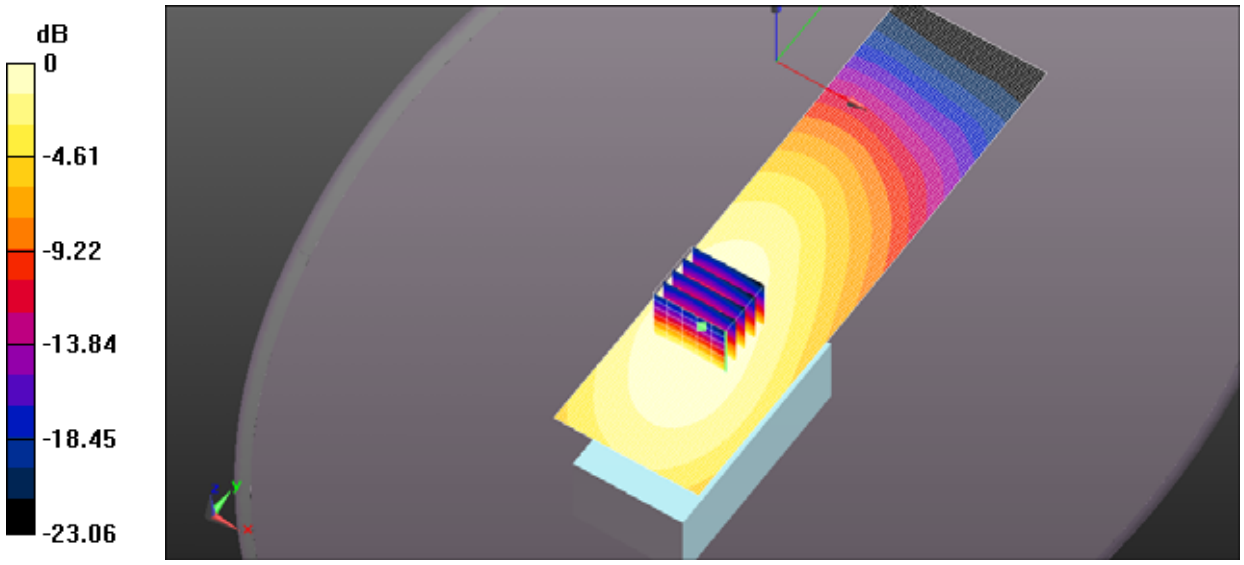

0 dB = 4.89 W/kg = 6.89 dBW/kg

File Name: 520MHz antenna FA-S76UC 520MHz-2026.da52:0

DUT: DUT Sample Brick w. Antenna; Type: Sample; Serial: IMEI Number

Communication System: UID 10000, CW; Frequency: 520 MHz; Duty Cycle: 1:1
Medium parameters used: f = 520 MHz; σ = 0.929 S/m; ε_r = 42.801; ρ = 1000 kg/m^3 ; Phantom section: Flat Section ; Measurement Standard: DASY5 (IEEE/IEC/ANSI C63.19-2007)

DASY Configuration:

- Probe: ES3DV3 - SN3250; ConvF(7.06, 7.06, 7.06); Calibrated: 3/10/2025;
- Sensor-Surface: 3mm (Mechanical Surface Detection)
- Electronics: DAE4 Sn874; Calibrated: 7/29/2025
- Phantom: ELI 4.0; Type: QD OVA 001 BB; Serial: 1057
- DASY52 52.10.0(1446); SEMCAD X 14.6.10(7417)

ICOM 640 520MHz antenna FA-S76 UC 520MHz Head BP316/Head - d=25mm, Pin=5W (ES-Probe)/Area Scan (51x181x1): Interpolated grid: dx=1.500 mm, dy=1.500 mm
Maximum value of SAR (interpolated) = 6.38 W/kg
ICOM 640 520MHz antenna FA-S76 UC 520MHz Head BP316/Head - d=25mm, Pin=5W (ES-Probe)/Zoom Scan (5x5x7) (6x5x7)/Cube 0: Measurement grid: dx=7.5mm, dy=7.5mm, dz=5mm
Reference Value = 69.93 V/m; Power Drift = -0.44 dB
Peak SAR (extrapolated) = 7.70 W/kg
SAR(1 g) = 5.48 W/kg; SAR(10 g) = 4.04 W/kg (SAR corrected for target medium)
Maximum value of SAR (measured) = 6.17 W/kg

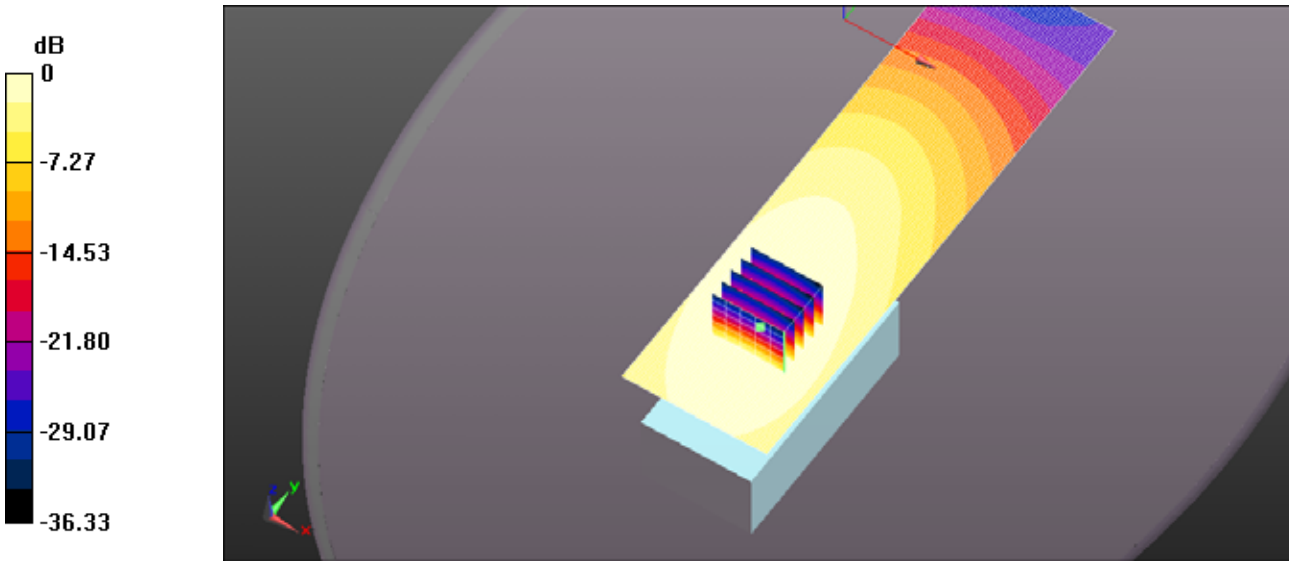

0 dB = 6.38 W/kg = 8.05 dBW/kg

HEAD BP-316						
Antenna	Power (W)	Channel	MHz	1g (W/Kg)	10g (W/Kg)	Power Drift (dB)
FA-S81U 380-430MHZ	4.58	2	405	2.81	2.1	-0.34
	4.62	5	417.5	**	**	
	4.6	8	430	3.11	2.3	0.02
FA-S82U 430-480MHz	4.6	8	430	**	**	
	4.56	11	442.5	5.83	4.28	-0.42
	4.56	14	455	**	**	
	4.48	16	467.5	2.31	1.7	-0.36
	4.48	18	480	**	**	
FA-S83U 470-520 MHz	4.48	17	470	5.31	3.86	-0.16
	4.52	19	482.5	**	**	
	4.68	21	495	4.19	3.05	-0.04
	4.92	25	507.5	**	**	
	4.89	26	520	5.52	3.81	-0.8
FA-S81US 400-450MHz	4.62	1	400	**	**	
	4.63	3	412.5	4.11	3.05	-0.19
	4.62	7	425	**	**	
	4.61	10	437.5	3.31	2.45	0.06
	4.56	13	450	**	**	
FA-S82US 450-490MHz	4.56	13	450	2.41	1.77	-0.47
	4.48	17	470	**	**	
	4.56	21	490	1.45	1.07	-0.25

FA-S76UC 400MHz	4.62	1	400	**	**	
	4.63	4	415	3.65	2.76	-0.11
	4.59	9	432.5	**	**	
	4.56	13	450	2.6	2	-0.33
	4.48	16	467.5	**	**	
	4.51	20	485	1.16	0.855	-0.3
	4.83	24	502.5	**	**	
	4.89	26	520	1.23	0.903	-0.52
FA-S76UC 420MHz	4.62	1	400	**	**	
	4.61	4	420	4.98	3.71	-0.17
	4.59	9	432.5	**	**	
	4.56	13	450	3.39	2.52	-0.42
	4.48	16	467.5	**	**	
	4.51	20	485	1.89	1.4	-0.52
	4.83	24	502.5	**	**	
	4.89	26	520	2.05	1.51	-0.62
FA-S76UC 440MHz	4.62	1	400	**	**	
	4.63	4	415	5.35	4.02	-0.1
	4.59	9	440	**	**	
	4.56	13	450	4.66	3.48	-0.21
	4.48	16	467.5	**	**	
	4.51	20	485	2.37	1.74	-0.33
	4.83	24	502.5	**	**	
	4.89	26	520	2.42	1.78	-0.5
FA-S76UC 460MHz	4.62	1	400	**	**	
	4.63	4	415	5.74	4.29	-0.3
	4.59	9	432.5	**	**	
	4.56	13	450	4.85	3.6	-0.4
	4.51	16	467.5	**	**	
	4.51	20	485	2.48	1.82	-0.28
	4.83	24	502.5	**	**	
	4.89	26	520	3.06	2.25	-0.53
FA-S76UC 480MHz	4.62	1	400	**	**	
	4.63	4	415	5.3	3.96	-0.46
	4.59	9	432.5	**	**	
	4.56	13	450	4.75	3.54	-0.16
	4.51	16	467.5	**	**	

	4.51	20	485	3.64	2.68	-0.24
	4.83	24	502.5	**	**	
	4.89	26	520	4.09	3.02	-0.47
FA-S76UC 500MHz	4.62	1	400	**	**	
	4.63	4	415	4.77	3.56	-0.46
	4.59	9	432.5	**	**	
	4.56	13	450	3.63	2.7	-0.19
	4.51	16	467.5	**	**	
	4.51	20	485	4.08	3.02	-0.15
	4.83	24	502.5	**	**	
	4.89	26	520	5.08	3.74	-0.39
FA-S76UC 520MHz	4.62	1	400	**	**	
	4.63	4	415	3.44	2.57	-0.49
	4.59	9	432.5	**	**	
	4.56	13	450	3.14	2.52	-0.31
	4.51	16	467.5	**	**	
	4.51	20	485	4.22	3.09	-0.33
	4.83	24	502.5	**	**	
	4.89	26	520	5.48	4.04	-0.44

EXHIBIT 4. BODY SAR MEASUREMENT

BODY BP-303N MB-133						
Antenna	**Power (W)**	**Channel**	**MHz**	**1g (W/Kg)**	**10g (W/Kg)**	**Power Drift (dB)**
FA-S81U 380-430MHZ	4.58	2	405	4.1	3.12	-0.23
	4.62	5	417.5	**	**	
	4.6	8	430	4.85	3.4	-0.24
FA-S82U 430-480MHz	4.6	8	430	7.38	5.4	-0.14
	4.56	11	442.5	7.04	5.12	-0.6
	4.56	14	455	4.91	3.57	-0.53
	4.48	16	467.5	**	**	
	4.48	18	480	2.78	2.01	-0.27
FA-S83U 470-520 MHz	4.48	17	470	**	**	
	4.52	19	482.5	6.47	4.69	-0.37
	4.68	21	495	**	**	
	4.92	25	507.5	6.63	4.68	-0.1
	4.89	26	520	**	**	
FA-S81US 400-450MHz	4.62	1	400	6.82	5	-0.12
	4.63	3	412.5	**	**	
	4.62	7	425	4.56	3.31	-0.04
	4.61	10	437.5	**	**	
	4.56	13	450	2.04	1.5	-0.3
FA-S82US 450-490MHz	4.56	13	450	**	**	
	4.48	17	470	3.58	2.62	-0.35
	4.56	21	490	**	**	

FA-S76UC 400MHz	4.62	1	400	7.28	5.38	-0.38
	4.63	4	415	5.97	4.41	-0.09
	4.59	9	432.5	**	**	
	4.56	13	450	4.06	2.98	-0.59
	4.48	16	467.5	**	**	
	4.51	20	485	2.17	1.58	-0.33
	4.83	24	502.5	**	**	
	4.89	26	520	2.28	1.65	-0.51
FA-S76UC 420MHz	4.62	1	400	8.29	6.09	-0.32
	4.61	4	415	7.53	5.75	-0.22
	4.59	9	432.5	7.48	5.48	-0.53
	4.56	13	450	4.96	3.65	-0.61
	4.48	16	467.5	**	**	
	4.51	20	485	3.5	2.55	-0.31
	4.83	24	502.5	**	**	
	4.89	26	520	3.6	2.64	-0.66
FA-S76UC 440MHz	4.62	1	400	8.35	6.2	-0.37
	4.63	4	415	8	5.85	-0.42
	4.59	9	440	6.28	4.6	-0.38
	4.56	13	450	**	**	
	4.48	16	467.5	3.94	2.85	-0.44
	4.51	20	485	**	**	
	4.83	24	502.5	3.96	2.87	-0.03
	4.89	26	520	4.26	3.12	-0.45
FA-S76UC 460MHz	4.62	1	400	8.58	6.33	-0.17
	4.63	4	415	8.35	6.16	-0.26
	4.59	9	432.5	6.92	5.08	-0.33
	4.56	13	450	6.52	4.79	-0.42
	4.51	16	467.5	**	**	
	4.51	20	485	5.17	3.76	-0.31
	4.83	24	502.5	**	**	

	4.89	26	520	5.75	4.22	-0.45
FA-S76UC 480MHz	4.62	1	400	7.3	5.41	-0.19
	4.63	4	415	7	5.17	-0.37
	4.59	9	432.5	6.47	4.77	-0.41
	4.56	13	450	**	**	
	4.51	16	467.5	5	3.65	-0.59
	4.51	20	485	**	**	
	4.83	24	502.5	5.76	4.19	0.04
	4.89	26	520	**	**	
FA-S76UC 500MHz	4.62	1	400	6.17	4.54	-0.15
	4.63	4	415	**	**	
	4.59	9	432.5	5.55	4.07	-0.42
	4.56	13	450	**	**	
	4.51	16	467.5	4.59	3.34	-0.11
	4.51	20	485	**	**	
	4.83	24	502.5	7.05	5.11	-0.18
	4.89	26	520	**	**	
FA-S76UC 520MHz	4.62	1	400	5.01	3.7	-0.16
	4.63	4	415	**	**	
	4.59	9	432.5	5.14	3.78	-0.47
	4.56	13	450	**	**	
	4.51	16	467.5	3.71	2.7	-0.38
	4.51	20	485	6.24	4.54	-0.21
	4.83	24	502.5	8.17	5.89	-0.18
	4.89	26	520	8.31	6.02	-0.37

File Name: FA-S81U 405MHz.da52:0

DUT: DUT Sample Brick w. Antenna; Type: Sample; Serial: IMEI Number

Communication System: UID 10000, CW; Frequency: 405 MHz; Duty Cycle: 1:1
Medium parameters used: f = 405 MHz; σ = 0.905 S/m; ε_r = 56.689; ρ = 1000 kg/m^3 ; Phantom section: Flat Section ; Measurement Standard: DASY5 (IEEE/IEC/ANSI C63.19-2007)

DASY Configuration:

- Probe: ES3DV3 - SN3250; ConvF(7.12, 7.12, 7.12); Calibrated: 3/10/2025;
- Sensor-Surface: 3mm (Mechanical Surface Detection)
- Electronics: DAE4 Sn874; Calibrated: 7/29/2025
- Phantom: ELI 4.0; Type: QD OVA 001 BB; Serial: 1057
- DASY52 52.10.0(1446); SEMCAD X 14.6.10(7417)

ICOM 640QR4 FA-81U 405MHz Body BP303N/Body - Belt Clip Touching, d=0mm, Pin=5W (ES-Probe)/Area Scan (41x161x1): Interpolated grid: dx=1.500 mm, dy=1.500 mm
Maximum value of SAR (interpolated) = 4.66 W/kg
ICOM 640QR4 FA-81U 405MHz Body BP303N/Body - Belt Clip Touching, d=0mm, Pin=5W (ES-Probe)/Zoom Scan (5x5x7) (6x5x7)/Cube 0: Measurement grid: dx=7.5mm, dy=7.5mm, dz=5mm
Reference Value = 71.83 V/m; Power Drift = -0.23 dB
Peak SAR (extrapolated) = 5.83 W/kg
SAR(1 g) = 4.1 W/kg; SAR(10 g) = 3.02 W/kg (SAR corrected for target medium)
Maximum value of SAR (measured) = 4.59 W/kg

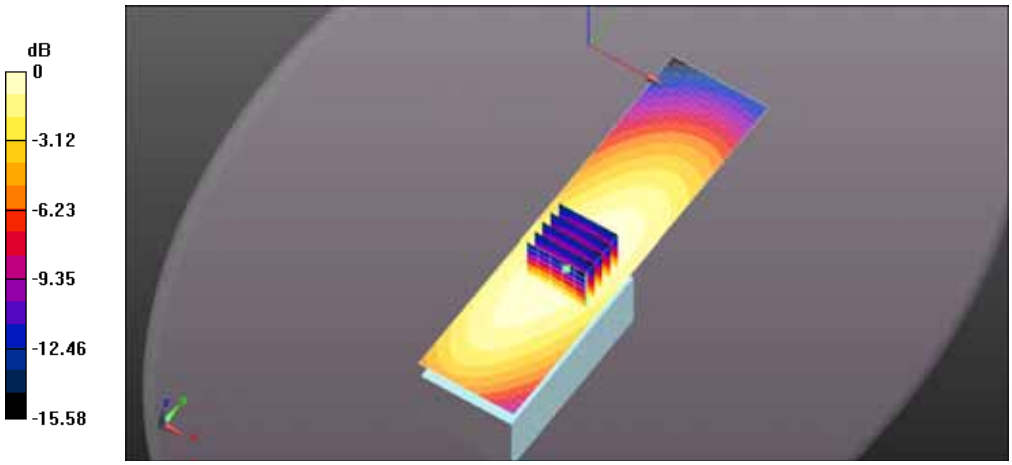

0 dB = 4.66 W/kg = 6.68 dBW/kg

File Name: FA-S81U 430MHz.da52:0

DUT: DUT Sample Brick w. Antenna; Type: Sample; Serial: IMEI Number

Communication System: UID 10000, CW; Frequency: 430 MHz; Duty Cycle: 1:1
Medium parameters used: f = 430 MHz; σ = 0.92 S/m; ε_r = 55.752; ρ = 1000 kg/m^3 ; Phantom section: Flat Section ; Measurement Standard: DASY5 (IEEE/IEC/ANSI C63.19-2007)

DASY Configuration:

- Probe: ES3DV3 - SN3250; ConvF(7.12, 7.12, 7.12); Calibrated: 3/10/2025;
- Sensor-Surface: 3mm (Mechanical Surface Detection)
- Electronics: DAE4 Sn874; Calibrated: 7/29/2025
- Phantom: ELI 4.0; Type: QD OVA 001 BB; Serial: 1057
- DASY52 52.10.0(1446); SEMCAD X 14.6.10(7417)

ICOM 640QR4 FA-81U 430MHz Body BP303N/Body - Belt Clip Touching, d=0mm, Pin=5W (ES-Probe)/Area Scan (41x161x1): Interpolated grid: dx=1.500 mm, dy=1.500 mm
Maximum value of SAR (interpolated) = 5.96 W/kg
ICOM 640QR4 FA-81U 430MHz Body BP303N/Body - Belt Clip Touching, d=0mm, Pin=5W (ES-Probe)/Zoom Scan (5x5x7) (6x5x7)/Cube 0: Measurement grid: dx=7.5mm, dy=7.5mm, dz=5mm
Reference Value = 77.37 V/m; Power Drift = -0.24 dB
Peak SAR (extrapolated) = 8.31 W/kg
SAR(1 g) = 4.85 W/kg; SAR(10 g) = 3.4 W/kg (SAR corrected for target medium)
Maximum value of SAR (measured) = 5.96 W/kg

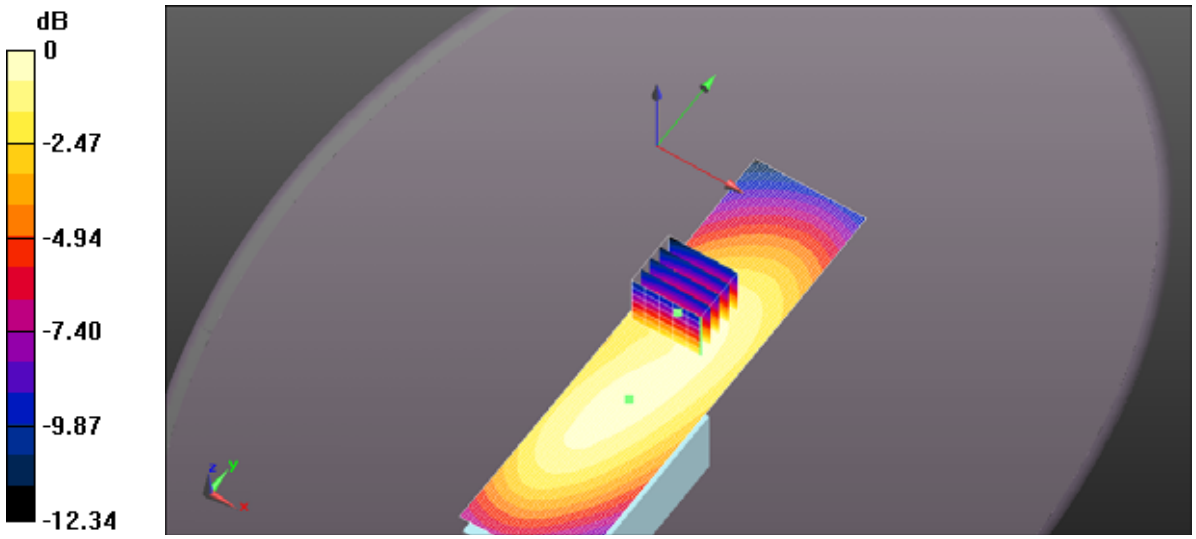

0 dB = 5.96 W/kg = 7.75 dBW/kg

File Name: FA-S82U 430MHz.da52:0

DUT: DUT Sample Brick w. Antenna; Type: Sample; Serial: IMEI Number

Communication System: UID 10000, CW; Frequency: 430 MHz; Duty Cycle: 1:1
Medium parameters used: f = 430 MHz; σ = 0.902 S/m; ε_r = 55.792; ρ = 1000 kg/m^3 ; Phantom section: Flat Section ; Measurement Standard: DASY5 (IEEE/IEC/ANSI C63.19-2007)

DASY Configuration:

- Probe: ES3DV3 - SN3250; ConvF(7.12, 7.12, 7.12); Calibrated: 3/10/2025;
- Sensor-Surface: 3mm (Mechanical Surface Detection)
- Electronics: DAE4 Sn874; Calibrated: 7/29/2025
- Phantom: ELI 4.0; Type: QD OVA 001 BB; Serial: 1057
- DASY52 52.10.0(1446); SEMCAD X 14.6.10(7417)

ICOM 640QR4 FA-S82U 430MHz Body BP303N/Body - Belt Clip Touching, d=0mm, Pin=5W (ES-Probe)/Area Scan (41x161x1): Interpolated grid: dx=1.500 mm, dy=1.500 mm
Maximum value of SAR (interpolated) = 8.47 W/kg
ICOM 640QR4 FA-S82U 430MHz Body BP303N/Body - Belt Clip Touching, d=0mm, Pin=5W (ES-Probe)/Zoom Scan (5x5x7) (6x6x7)/Cube 0: Measurement grid: dx=7.5mm, dy=7.5mm, dz=5mm
Reference Value = 92.59 V/m; Power Drift = -0.14 dB
Peak SAR (extrapolated) = 10.6 W/kg
SAR(1 g) = 7.38 W/kg; SAR(10 g) = 5.4 W/kg (SAR corrected for target medium)
Maximum value of SAR (measured) = 8.30 W/kg

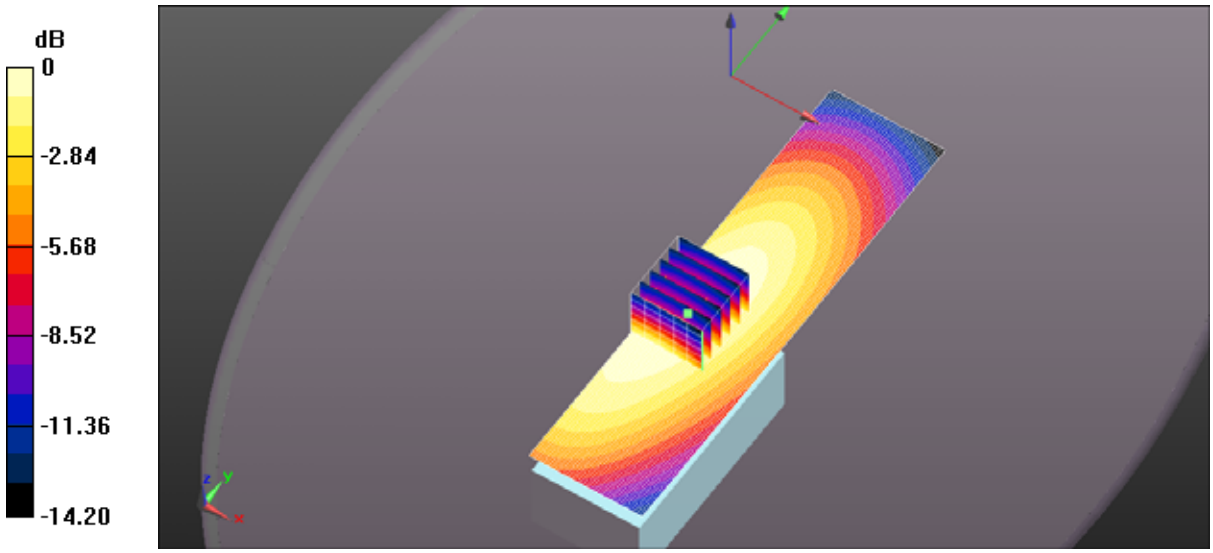

0 dB = 8.47 W/kg = 9.28 dBW/kg

File Name: FA-S82U 442.5MHz.da52:0

DUT: DUT Sample Brick w. Antenna; Type: Sample; Serial: IMEI Number

Communication System: UID 10000, CW; Frequency: 442.5 MHz; Duty Cycle: 1:1
Medium parameters used (interpolated): f = 442.5 MHz; σ = 0.927 S/m; ε_r = 55.569; ρ = 1000 kg/m^3 ;
Phantom section: Flat Section ; Measurement Standard: DASY5 (IEEE/IEC/ANSI C63.19-2007)

DASY Configuration:

- Probe: ES3DV3 - SN3250; ConvF(7.12, 7.12, 7.12); Calibrated: 3/10/2025;
- Sensor-Surface: 3mm (Mechanical Surface Detection)
- Electronics: DAE4 Sn874; Calibrated: 7/29/2025
- Phantom: ELI 4.0; Type: QD OVA 001 BB; Serial: 1057
- DASY52 52.10.0(1446); SEMCAD X 14.6.10(7417)

ICOM 640QR4 FA-82U 442.5MHz Body BP303N/Body - Belt Clip Touching, d=0mm, Pin=5W (ES-Probe)/Area Scan (41x161x1): Interpolated grid: dx=1.500 mm, dy=1.500 mm
Info: Interpolated medium parameters used for SAR evaluation.
Maximum value of SAR (interpolated) = 8.46 W/kg
ICOM 640QR4 FA-82U 442.5MHz Body BP303N/Body - Belt Clip Touching, d=0mm, Pin=5W (ES-Probe)/Zoom Scan (5x5x7) (6x5x7)/Cube 0: Measurement grid: dx=7.5mm, dy=7.5mm, dz=5mm
Reference Value = 95.53 V/m; Power Drift = -0.60 dB
Peak SAR (extrapolated) = 10.2 W/kg
SAR(1 g) = 7.04 W/kg; SAR(10 g) = 5.12 W/kg (SAR corrected for target medium)
Info: Interpolated medium parameters used for SAR evaluation.
Maximum value of SAR (measured) = 7.93 W/kg

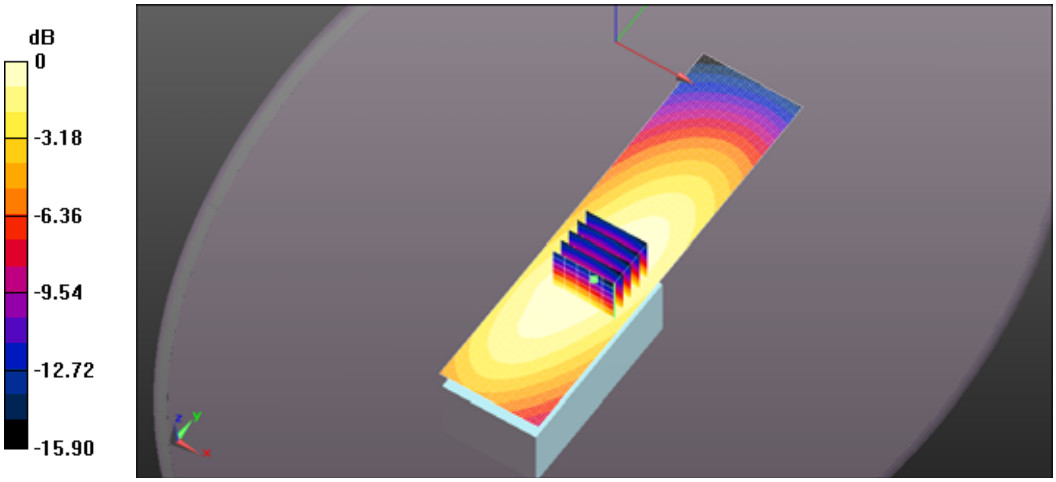

0 dB = 8.46 W/kg = 9.28 dBW/kg

File Name: FA-S82U 455MHz.da52:0

DUT: DUT Sample Brick w. Antenna; Type: Sample; Serial: IMEI Number

Communication System: UID 10000, CW; Frequency: 455 MHz; Duty Cycle: 1:1
Medium parameters used: f = 455 MHz; σ = 0.939 S/m; ε_r = 55.566; ρ = 1000 kg/m^3 ; Phantom section: Flat Section ; Measurement Standard: DASY5 (IEEE/IEC/ANSI C63.19-2007)

DASY Configuration:

- Probe: ES3DV3 - SN3250; ConvF(7.12, 7.12, 7.12); Calibrated: 3/10/2025;
- Sensor-Surface: 3mm (Mechanical Surface Detection)
- Electronics: DAE4 Sn874; Calibrated: 7/29/2025
- Phantom: ELI 4.0; Type: QD OVA 001 BB; Serial: 1057
- DASY52 52.10.0(1446); SEMCAD X 14.6.10(7417)

ICOM 640QR4 FA-82U 455MHz Body BP303N/Body - Belt Clip Touching, d=0mm, Pin=5W (ES-Probe)/Area Scan (41x161x1): Interpolated grid: dx=1.500 mm, dy=1.500 mm
Maximum value of SAR (interpolated) = 5.75 W/kg
ICOM 640QR4 FA-82U 455MHz Body BP303N/Body - Belt Clip Touching, d=0mm, Pin=5W (ES-Probe)/Zoom Scan (5x5x7) (6x5x7)/Cube 0: Measurement grid: dx=7.5mm, dy=7.5mm, dz=5mm
Reference Value = 76.85 V/m; Power Drift = -0.53 dB
Peak SAR (extrapolated) = 7.09 W/kg
SAR(1 g) = 4.91 W/kg; SAR(10 g) = 3.57 W/kg (SAR corrected for target medium)
Maximum value of SAR (measured) = 5.54 W/kg

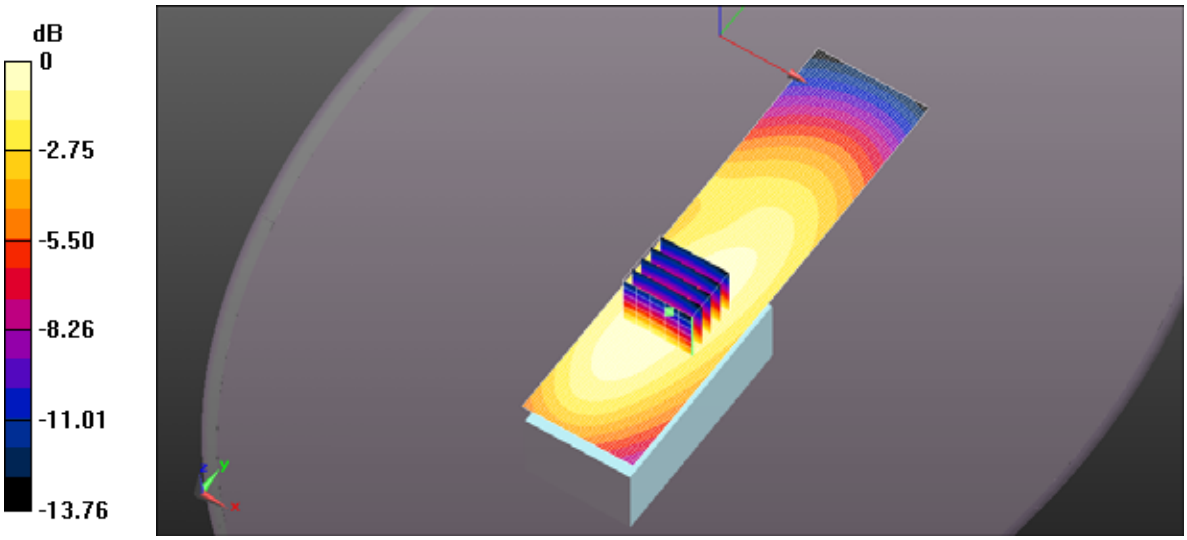

0 dB = 5.75 W/kg = 7.59 dBW/kg

File Name: FA-S82U 480MHz.da52:0

DUT: DUT Sample Brick w. Antenna; Type: Sample; Serial: IMEI Number

Communication System: UID 10000, CW; Frequency: 480 MHz; Duty Cycle: 1:1
Medium parameters used: f = 480 MHz; σ = 0.971 S/m; ε_r = 55.133; ρ = 1000 kg/m^3 ; Phantom section: Flat Section ; Measurement Standard: DASY5 (IEEE/IEC/ANSI C63.19-2007)

DASY Configuration:

- Probe: ES3DV3 - SN3250; ConvF(7.12, 7.12, 7.12); Calibrated: 3/10/2025;
- Sensor-Surface: 3mm (Mechanical Surface Detection)
- Electronics: DAE4 Sn874; Calibrated: 7/29/2025
- Phantom: ELI 4.0; Type: QD OVA 001 BB; Serial: 1057
- DASY52 52.10.0(1446); SEMCAD X 14.6.10(7417)

ICOM 640QR4 FA-82U 480MHz Body BP303N/Body - Belt Clip Touching, d=0mm, Pin=5W (ES-Probe)/Area Scan (41x161x1): Interpolated grid: dx=1.500 mm, dy=1.500 mm
Maximum value of SAR (interpolated) = 3.21 W/kg
ICOM 640QR4 FA-82U 480MHz Body BP303N/Body - Belt Clip Touching, d=0mm, Pin=5W (ES-Probe)/Zoom Scan (5x5x7) (6x5x7)/Cube 0: Measurement grid: dx=7.5mm, dy=7.5mm, dz=5mm
Reference Value = 58.39 V/m; Power Drift = -0.27 dB
Peak SAR (extrapolated) = 4.01 W/kg
SAR(1 g) = 2.78 W/kg; SAR(10 g) = 2.01 W/kg (SAR corrected for target medium)
Maximum value of SAR (measured) = 3.14 W/kg

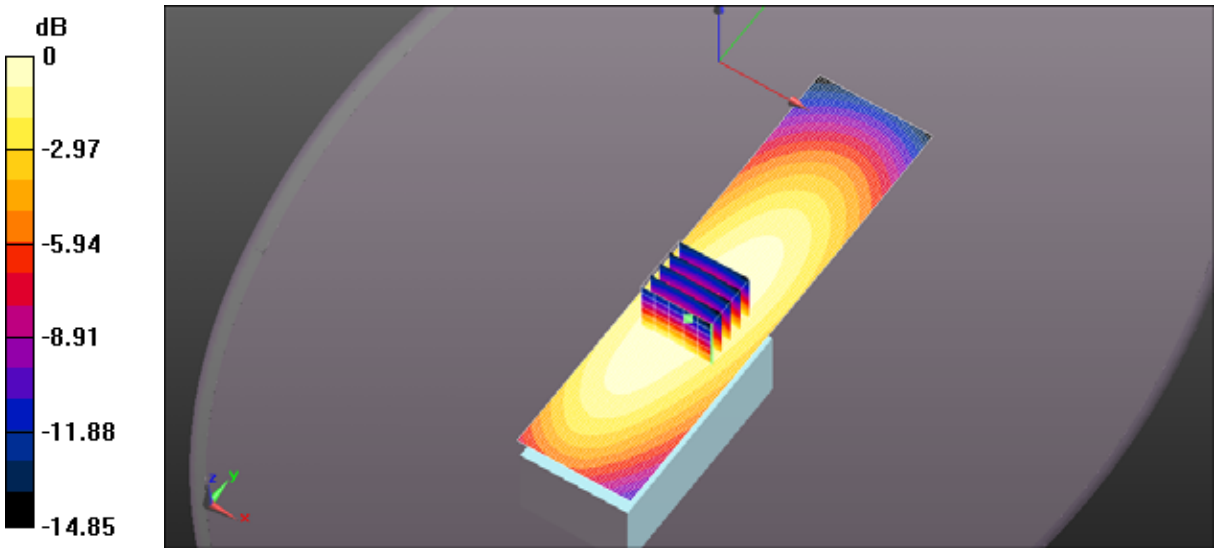

0 dB = 3.21 W/kg = 5.07 dBW/kg

File Name: FA-S83U 482.5MHz.da52:0

DUT: DUT Sample Brick w. Antenna; Type: Sample; Serial: IMEI Number

Communication System: UID 10000, CW; Frequency: 482.5 MHz; Duty Cycle: 1:1
Medium parameters used (interpolated): f = 482.5 MHz; σ = 0.972 S/m; ε_r = 55.071; ρ = 1000 kg/m^3 ;
Phantom section: Flat Section ; Measurement Standard: DASY5 (IEEE/IEC/ANSI C63.19-2007)

DASY Configuration:

- Probe: ES3DV3 - SN3250; ConvF(7.12, 7.12, 7.12); Calibrated: 3/10/2025;
- Sensor-Surface: 3mm (Mechanical Surface Detection)
- Electronics: DAE4 Sn874; Calibrated: 7/29/2025
- Phantom: ELI 4.0; Type: QD OVA 001 BB; Serial: 1057
- DASY52 52.10.0(1446); SEMCAD X 14.6.10(7417)

ICOM 640QR4 FA-83U 482.5MHz Body BP303N/Body - Belt Clip Touching, d=0mm, Pin=5W (ES-Probe)/Area Scan (51x161x1): Interpolated grid: dx=1.500 mm, dy=1.500 mm
Info: Interpolated medium parameters used for SAR evaluation.
Maximum value of SAR (interpolated) = 7.28 W/kg
ICOM 640QR4 FA-83U 482.5MHz Body BP303N/Body - Belt Clip Touching, d=0mm, Pin=5W (ES-Probe)/Zoom Scan (5x5x7) (6x5x7)/Cube 0: Measurement grid: dx=7.5mm, dy=7.5mm, dz=5mm
Reference Value = 79.88 V/m; Power Drift = -0.37 dB
Peak SAR (extrapolated) = 9.31 W/kg
SAR(1 g) = 6.47 W/kg; SAR(10 g) = 4.69 W/kg (SAR corrected for target medium)
Info: Interpolated medium parameters used for SAR evaluation.
Maximum value of SAR (measured) = 7.30 W/kg

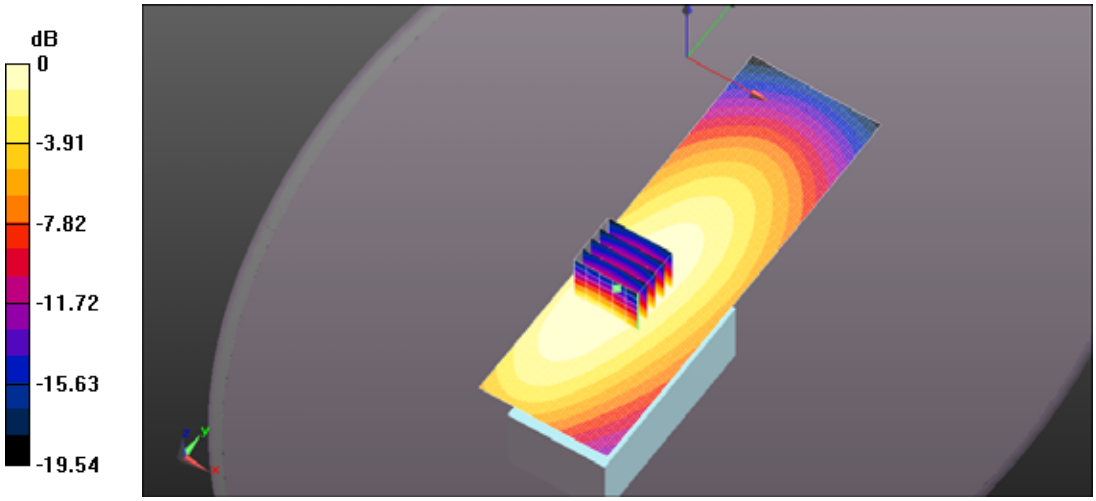

0 dB = 7.28 W/kg = 8.62 dBW/kg

File Name: FA-S83U 507.5MHz.da52:0

DUT: DUT Sample Brick w. Antenna; Type: Sample; Serial: IMEI Number

Communication System: UID 10000, CW; Frequency: 507.5 MHz; Duty Cycle: 1:1
Medium parameters used (interpolated): f = 507.5 MHz; σ = 0.989 S/m; ε_r = 54.98; ρ = 1000 kg/m^3 ;
Phantom section: Flat Section ; Measurement Standard: DASY5 (IEEE/IEC/ANSI C63.19-2007)

DASY Configuration:

- Probe: ES3DV3 - SN3250; ConvF(7.12, 7.12, 7.12); Calibrated: 3/10/2025;
- Sensor-Surface: 3mm (Mechanical Surface Detection)
- Electronics: DAE4 Sn874; Calibrated: 7/29/2025
- Phantom: ELI 4.0; Type: QD OVA 001 BB; Serial: 1057
- DASY52 52.10.0(1446); SEMCAD X 14.6.10(7417)

ICOM 640QR4 FA-83U 507.5MHz Body BP303N/Body - Belt Clip Touching, d=0mm, Pin=5W (ES-Probe)/Area Scan (41x161x1): Interpolated grid: dx=1.500 mm, dy=1.500 mm
Info: Interpolated medium parameters used for SAR evaluation.
Maximum value of SAR (interpolated) = 7.63 W/kg
ICOM 640QR4 FA-83U 507.5MHz Body BP303N/Body - Belt Clip Touching, d=0mm, Pin=5W (ES-Probe)/Zoom Scan (5x5x7) (7x6x7)/Cube 0: Measurement grid: dx=7.5mm, dy=7.5mm, dz=5mm
Reference Value = 83.95 V/m; Power Drift = -0.10 dB
Peak SAR (extrapolated) = 9.84 W/kg
SAR(1 g) = 6.63 W/kg; SAR(10 g) = 4.68 W/kg (SAR corrected for target medium)
Info: Interpolated medium parameters used for SAR evaluation.
Maximum value of SAR (measured) = 7.50 W/kg

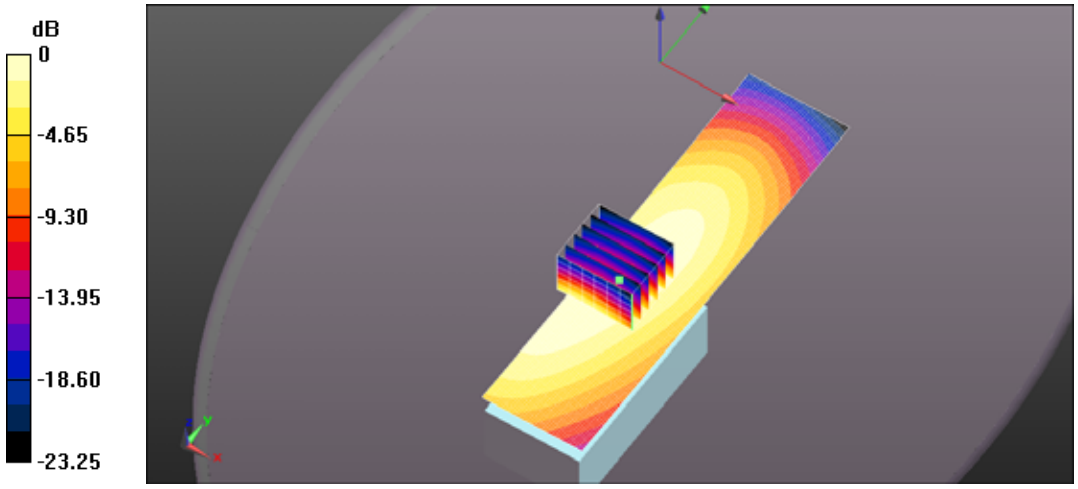

0 dB = 7.63 W/kg = 8.82 dBW/kg

File Name: FA-S81US 400MHz.da52:0

DUT: DUT Sample Brick w. Antenna; Type: Sample; Serial: IMEI Number

Communication System: UID 10000, CW; Frequency: 400 MHz; Duty Cycle: 1:1
Medium parameters used: f = 400 MHz; σ = 0.9 S/m; ε_r = 56.794; ρ = 1000 kg/m^3 ; Phantom section: Flat Section ; Measurement Standard: DASY5 (IEEE/IEC/ANSI C63.19-2007)

DASY Configuration:

- Probe: ES3DV3 - SN3250; ConvF(7.12, 7.12, 7.12); Calibrated: 3/10/2025;
- Sensor-Surface: 3mm (Mechanical Surface Detection)
- Electronics: DAE4 Sn874; Calibrated: 7/29/2025
- Phantom: ELI 4.0; Type: QD OVA 001 BB; Serial: 1057
- DASY52 52.10.0(1446); SEMCAD X 14.6.10(7417)

ICOM 640QR4 FA-81US 400MHz Body BP303N/Body - Belt Clip Touching, d=0mm, Pin=5W (ES-Probe)/Area Scan (41x161x1): Interpolated grid: dx=1.500 mm, dy=1.500 mm
Maximum value of SAR (interpolated) = 7.91 W/kg
ICOM 640QR4 FA-81US 400MHz Body BP303N/Body - Belt Clip Touching, d=0mm, Pin=5W (ES-Probe)/Zoom Scan (5x5x7) (6x5x7)/Cube 0: Measurement grid: dx=7.5mm, dy=7.5mm, dz=5mm
Reference Value = 85.59 V/m; Power Drift = -0.12 dB
Peak SAR (extrapolated) = 9.73 W/kg
SAR(1 g) = 6.82 W/kg; SAR(10 g) = 5 W/kg (SAR corrected for target medium)
Maximum value of SAR (measured) = 7.65 W/kg

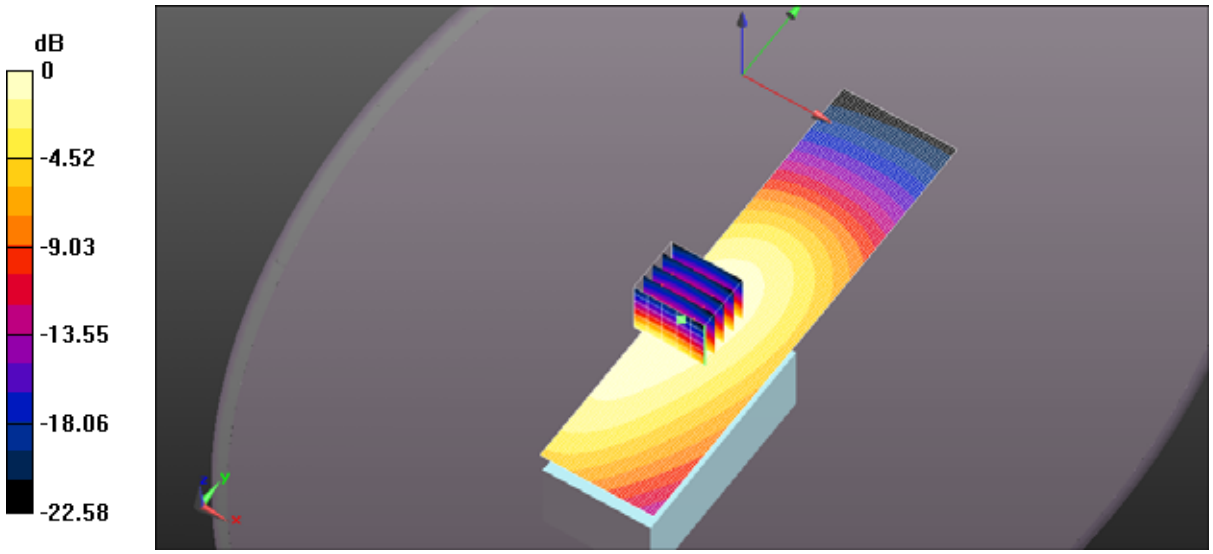

0 dB = 7.91 W/kg = 8.98 dBW/kg

File Name: FA-S81US 425MHz.da52:0

DUT: DUT Sample Brick w. Antenna; Type: Sample; Serial: IMEI Number

Communication System: UID 10000, CW; Frequency: 425 MHz; Duty Cycle: 1:1
Medium parameters used: f = 425 MHz; σ = 0.918 S/m; ε_r = 55.939; ρ = 1000 kg/m^3 ; Phantom section: Flat Section ; Measurement Standard: DASY5 (IEEE/IEC/ANSI C63.19-2007)

DASY Configuration:

- Probe: ES3DV3 - SN3250; ConvF(7.12, 7.12, 7.12); Calibrated: 3/10/2025;
- Sensor-Surface: 3mm (Mechanical Surface Detection)
- Electronics: DAE4 Sn874; Calibrated: 7/29/2025
- Phantom: ELI 4.0; Type: QD OVA 001 BB; Serial: 1057
- DASY52 52.10.0(1446); SEMCAD X 14.6.10(7417)

ICOM 640QR4 FA-81US 425MHz Body BP303N/Body - Belt Clip Touching, d=0mm, Pin=5W (ES-Probe)/Area Scan (51x161x1): Interpolated grid: dx=1.500 mm, dy=1.500 mm
Maximum value of SAR (interpolated) = 5.15 W/kg
ICOM 640QR4 FA-81US 425MHz Body BP303N/Body - Belt Clip Touching, d=0mm, Pin=5W (ES-Probe)/Zoom Scan (5x5x7) (6x6x7)/Cube 0: Measurement grid: dx=7.5mm, dy=7.5mm, dz=5mm
Reference Value = 68.00 V/m; Power Drift = -0.04 dB
Peak SAR (extrapolated) = 6.57 W/kg
SAR(1 g) = 4.56 W/kg; SAR(10 g) = 3.31 W/kg (SAR corrected for target medium)
Maximum value of SAR (measured) = 5.12 W/kg

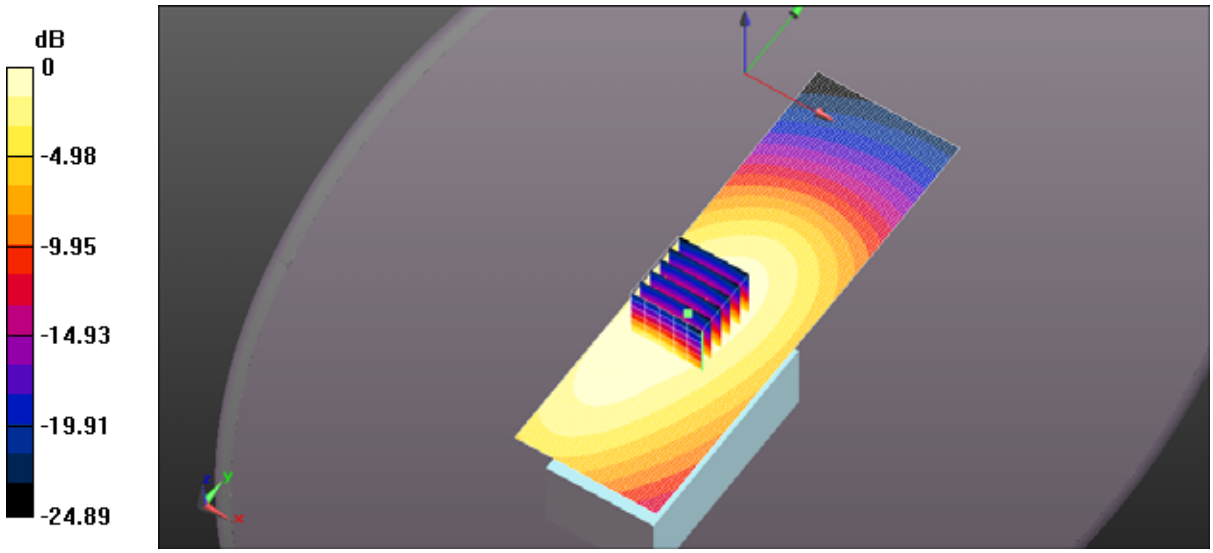

0 dB = 5.15 W/kg = 7.11 dBW/kg

File Name: FA-S81US 450MHz.da52:0

DUT: DUT Sample Brick w. Antenna; Type: Sample; Serial: IMEI Number

Communication System: UID 10000, CW; Frequency: 450 MHz; Duty Cycle: 1:1
Medium parameters used: f = 450 MHz; σ = 0.962 S/m; ε_r = 55.014; ρ = 1000 kg/m^3 ; Phantom section: Flat Section ; Measurement Standard: DASY5 (IEEE/IEC/ANSI C63.19-2007)

DASY Configuration:

- Probe: ES3DV3 - SN3250; ConvF(7.12, 7.12, 7.12); Calibrated: 3/10/2025;
- Sensor-Surface: 3mm (Mechanical Surface Detection)
- Electronics: DAE4 Sn874; Calibrated: 7/29/2025
- Phantom: ELI 4.0; Type: QD OVA 001 BB; Serial: 1057
- DASY52 52.10.0(1446); SEMCAD X 14.6.10(7417)

ICOM 640QR4 FA-81US 450MHz Body BP303N/Body - Belt Clip Touching, d=0mm, Pin=5W (ES-Probe)/Area Scan (41x161x1): Interpolated grid: dx=1.500 mm, dy=1.500 mm
Maximum value of SAR (interpolated) = 2.44 W/kg
ICOM 640QR4 FA-81US 450MHz Body BP303N/Body - Belt Clip Touching, d=0mm, Pin=5W (ES-Probe)/Zoom Scan (5x5x7) (6x6x7)/Cube 0: Measurement grid: dx=7.5mm, dy=7.5mm, dz=5mm
Reference Value = 47.69 V/m; Power Drift = -0.30 dB
Peak SAR (extrapolated) = 2.99 W/kg
SAR(1 g) = 2.04 W/kg; SAR(10 g) = 1.5 W/kg (SAR corrected for target medium)
Maximum value of SAR (measured) = 2.35 W/kg

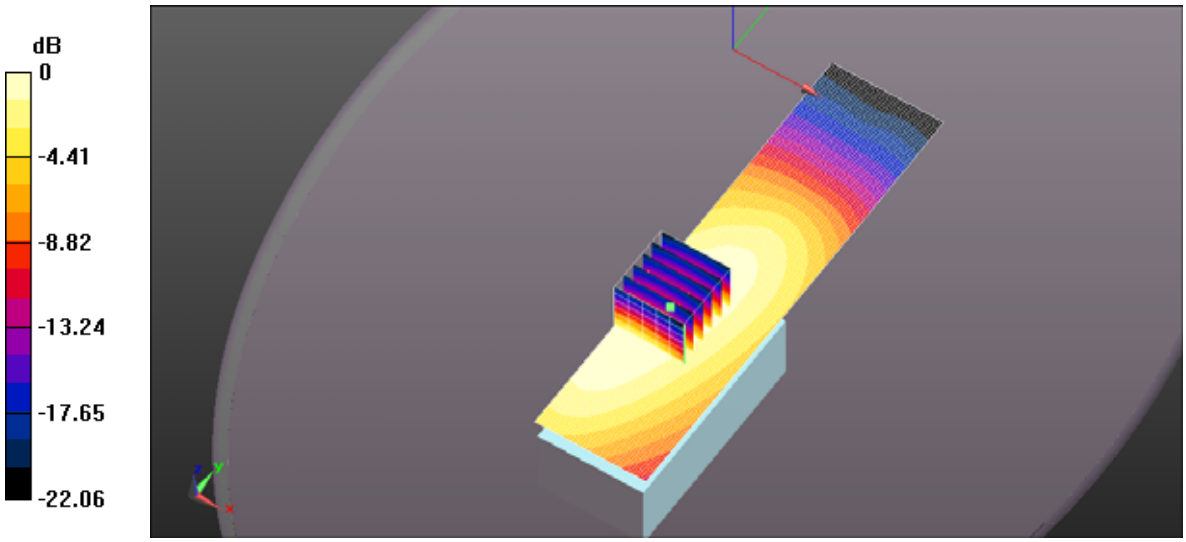

0 dB = 2.44 W/kg = 3.87 dBW/kg

File Name: FA-S82US 470MHz.da52:0

DUT: DUT Sample Brick w. Antenna; Type: Sample; Serial: IMEI Number

Communication System: UID 10000, CW; Frequency: 470 MHz; Duty Cycle: 1:1
Medium parameters used: f = 470 MHz; σ = 0.986 S/m; ε_r = 54.758; ρ = 1000 kg/m^3 ; Phantom section: Flat Section ; Measurement Standard: DASY5 (IEEE/IEC/ANSI C63.19-2007)

DASY Configuration:

- Probe: ES3DV3 - SN3250; ConvF(7.12, 7.12, 7.12); Calibrated: 3/10/2025;
- Sensor-Surface: 3mm (Mechanical Surface Detection)
- Electronics: DAE4 Sn874; Calibrated: 7/29/2025
- Phantom: ELI 4.0; Type: QD OVA 001 BB; Serial: 1057
- DASY52 52.10.0(1446); SEMCAD X 14.6.10(7417)

ICOM 640QR4 FA-82US 470MHz Body BP303N/Body - Belt Clip Touching, d=0mm, Pin=5W (ES-Probe)/Area Scan (41x161x1): Interpolated grid: dx=1.500 mm, dy=1.500 mm
Maximum value of SAR (interpolated) = 4.11 W/kg
ICOM 640QR4 FA-82US 470MHz Body BP303N/Body - Belt Clip Touching, d=0mm, Pin=5W (ES-Probe)/Zoom Scan (5x5x7) (6x5x7)/Cube 0: Measurement grid: dx=7.5mm, dy=7.5mm, dz=5mm
Reference Value = 59.84 V/m; Power Drift = -0.35 dB
Peak SAR (extrapolated) = 5.12 W/kg
SAR(1 g) = 3.58 W/kg; SAR(10 g) = 2.62 W/kg (SAR corrected for target medium)
Maximum value of SAR (measured) = 4.02 W/kg

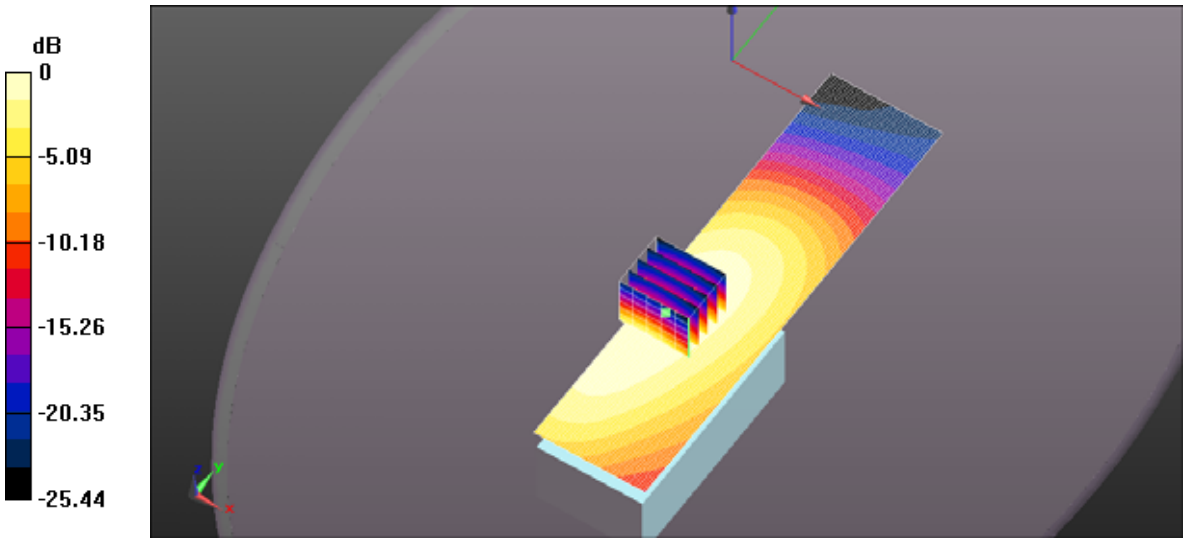

0 dB = 4.11 W/kg = 6.14 dBW/kg

File Name: FA-S76UC 470MHz.da52:0

DUT: DUT Sample Brick w. Antenna; Type: Sample; Serial: IMEI Number

Communication System: UID 10000, CW; Frequency: 470 MHz; Duty Cycle: 1:1
Medium parameters used: f = 470 MHz; σ = 0.986 S/m; ε_r = 54.758; ρ = 1000 kg/m^3 ; Phantom section: Flat Section ; Measurement Standard: DASY5 (IEEE/IEC/ANSI C63.19-2007)

DASY Configuration:

- Probe: ES3DV3 - SN3250; ConvF(7.12, 7.12, 7.12); Calibrated: 3/10/2025;
- Sensor-Surface: 3mm (Mechanical Surface Detection)
- Electronics: DAE4 Sn874; Calibrated: 7/29/2025
- Phantom: ELI 4.0; Type: QD OVA 001 BB; Serial: 1057
- DASY52 52.10.0(1446); SEMCAD X 14.6.10(7417)

ICOM 640QR4 FA-76UC 470MHz Body BP303N/Body - Belt Clip Touching, d=0mm, Pin=5W (ES-Probe)/Area Scan (41x161x1): Interpolated grid: dx=1.500 mm, dy=1.500 mm
Maximum value of SAR (interpolated) = 8.49 W/kg
ICOM 640QR4 FA-76UC 470MHz Body BP303N/Body - Belt Clip Touching, d=0mm, Pin=5W (ES-Probe)/Zoom Scan (5x5x7) (7x6x7)/Cube 0: Measurement grid: dx=7.5mm, dy=7.5mm, dz=5mm
Reference Value = 93.21 V/m; Power Drift = -0.38 dB
Peak SAR (extrapolated) = 10.4 W/kg
SAR(1 g) = 7.28 W/kg; SAR(10 g) = 5.38 W/kg (SAR corrected for target medium)
Maximum value of SAR (measured) = 8.18 W/kg

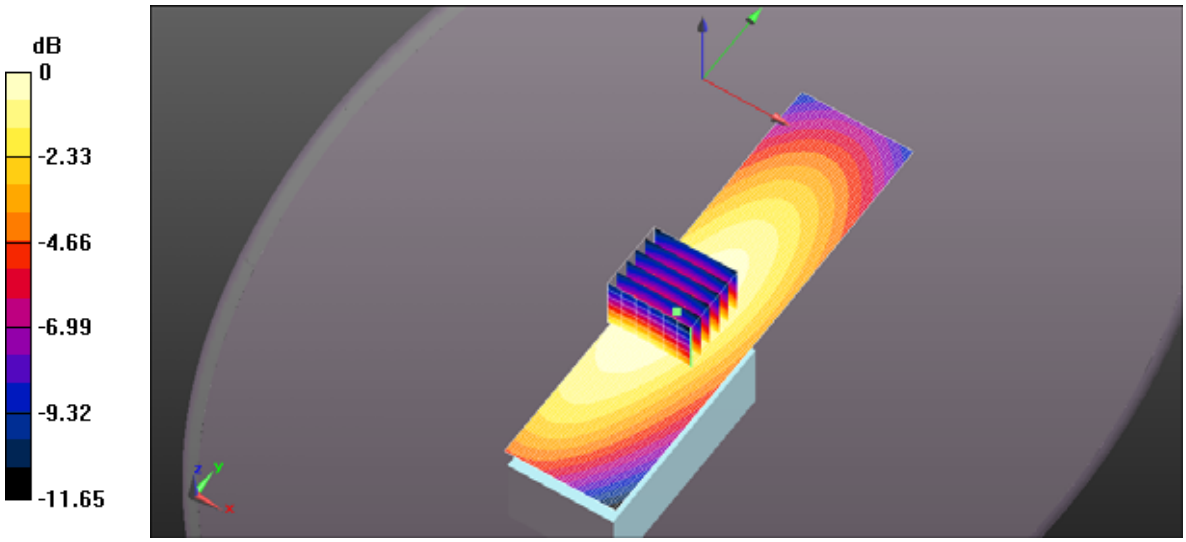

0 dB = 8.49 W/kg = 9.29 dBW/kg

File Name: FA-S76UC 415MHz.da52:0

DUT: DUT Sample Brick w. Antenna; Type: Sample; Serial: IMEI Number

Communication System: UID 10000, CW; Frequency: 415 MHz; Duty Cycle: 1:1
Medium parameters used: f = 415 MHz; σ = 0.936 S/m; ε_r = 55.507; ρ = 1000 kg/m^3 ; Phantom section: Flat Section ; Measurement Standard: DASY5 (IEEE/IEC/ANSI C63.19-2007)

DASY Configuration:

- Probe: ES3DV3 - SN3250; ConvF(7.12, 7.12, 7.12); Calibrated: 3/10/2025;
- Sensor-Surface: 3mm (Mechanical Surface Detection)
- Electronics: DAE4 Sn874; Calibrated: 7/29/2025
- Phantom: ELI 4.0; Type: QD OVA 001 BB; Serial: 1057
- DASY52 52.10.0(1446); SEMCAD X 14.6.10(7417)

ICOM 640QR4 FA-76UC 415MHz Body BP303N/Body - Belt Clip Touching, d=0mm, Pin=5W (ES-Probe)/Area Scan (41x161x1): Interpolated grid: dx=1.500 mm, dy=1.500 mm
Maximum value of SAR (interpolated) = 6.81 W/kg
ICOM 640QR4 FA-76UC 415MHz Body BP303N/Body - Belt Clip Touching, d=0mm, Pin=5W (ES-Probe)/Zoom Scan (5x5x7) (6x5x7)/Cube 0: Measurement grid: dx=7.5mm, dy=7.5mm, dz=5mm
Reference Value = 83.42 V/m; Power Drift = -0.09 dB
Peak SAR (extrapolated) = 8.48 W/kg
SAR(1 g) = 5.97 W/kg; SAR(10 g) = 4.41 W/kg (SAR corrected for target medium)
Maximum value of SAR (measured) = 6.68 W/kg

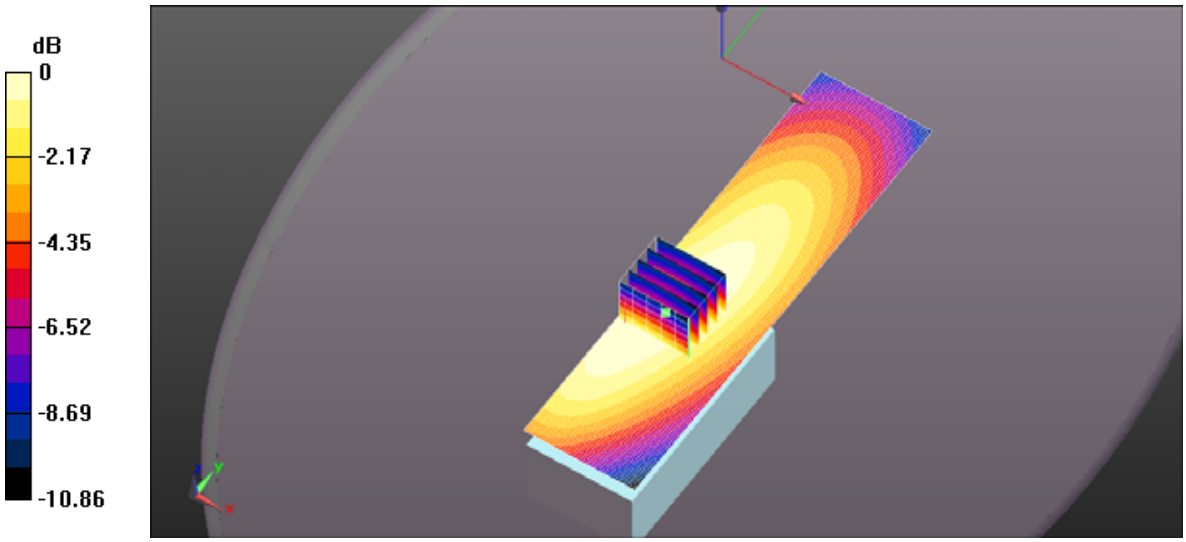

0 dB = 6.81 W/kg = 8.33 dBW/kg

File Name: FA-S76UC 450MHz.da52:0

DUT: DUT Sample Brick w. Antenna; Type: Sample; Serial: IMEI Number

Communication System: UID 10000, CW; Frequency: 450 MHz; Duty Cycle: 1:1
Medium parameters used: f = 450 MHz; σ = 0.962 S/m; ε_r = 55.014; ρ = 1000 kg/m^3 ; Phantom section: Flat Section ; Measurement Standard: DASY5 (IEEE/IEC/ANSI C63.19-2007)

DASY Configuration:

- Probe: ES3DV3 - SN3250; ConvF(7.12, 7.12, 7.12); Calibrated: 3/10/2025;
- Sensor-Surface: 3mm (Mechanical Surface Detection)
- Electronics: DAE4 Sn874; Calibrated: 7/29/2025
- Phantom: ELI 4.0; Type: QD OVA 001 BB; Serial: 1057
- DASY52 52.10.0(1446); SEMCAD X 14.6.10(7417)

ICOM 640QR4 FA-76UC 450MHz Body BP303N/Body - Belt Clip Touching, d=0mm, Pin=5W (ES-Probe)/Area Scan (41x161x1): Interpolated grid: dx=1.500 mm, dy=1.500 mm
Maximum value of SAR (interpolated) = 4.89 W/kg
ICOM 640QR4 FA-76UC 450MHz Body BP303N/Body - Belt Clip Touching, d=0mm, Pin=5W (ES-Probe)/Zoom Scan (5x5x7) (7x6x7)/Cube 0: Measurement grid: dx=7.5mm, dy=7.5mm, dz=5mm
Reference Value = 71.50 V/m; Power Drift = -0.59 dB
Peak SAR (extrapolated) = 6.01 W/kg
SAR(1 g) = 4.06 W/kg; SAR(10 g) = 2.98 W/kg (SAR corrected for target medium)
Maximum value of SAR (measured) = 4.68 W/kg

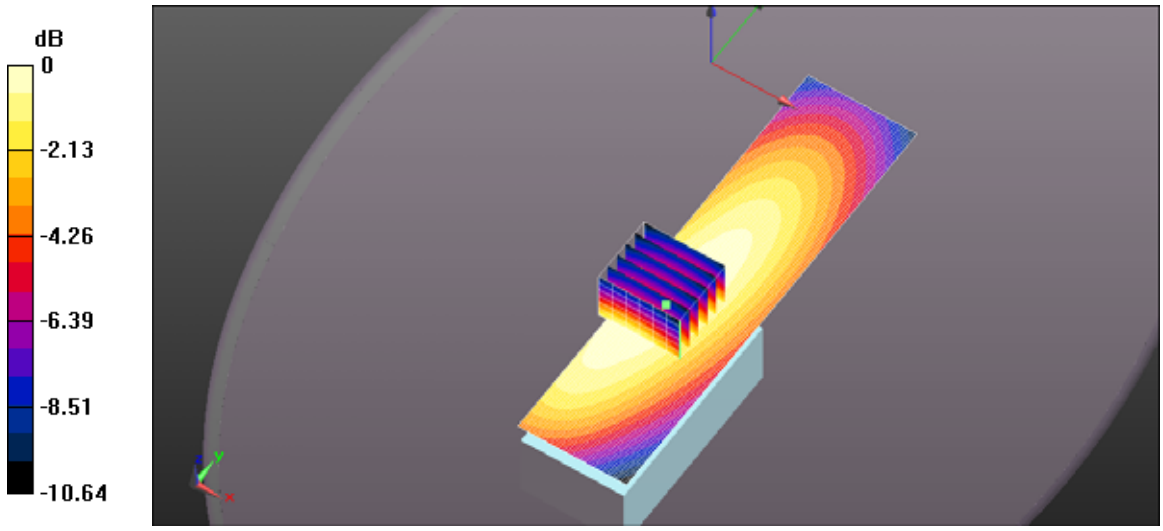

0 dB = 4.89 W/kg = 6.90 dBW/kg

File Name: FA-S76UC 485MHz.da52:0

DUT: DUT Sample Brick w. Antenna; Type: Sample; Serial: IMEI Number

Communication System: UID 10000, CW; Frequency: 485 MHz; Duty Cycle: 1:1
Medium parameters used: f = 485 MHz; σ = 1.001 S/m; ε_r = 54.553; ρ = 1000 kg/m^3 ; Phantom section: Flat Section ; Measurement Standard: DASY5 (IEEE/IEC/ANSI C63.19-2007)

DASY Configuration:

- Probe: ES3DV3 - SN3250; ConvF(7.12, 7.12, 7.12); Calibrated: 3/10/2025;
- Sensor-Surface: 3mm (Mechanical Surface Detection)
- Electronics: DAE4 Sn874; Calibrated: 7/29/2025
- Phantom: ELI 4.0; Type: QD OVA 001 BB; Serial: 1057
- DASY52 52.10.0(1446); SEMCAD X 14.6.10(7417)

ICOM 640QR4 FA-76UC 485MHz Body BP303N/Body - Belt Clip Touching, d=0mm, Pin=5W (ES-Probe)/Area Scan (41x161x1): Interpolated grid: dx=1.500 mm, dy=1.500 mm
Maximum value of SAR (interpolated) = 2.53 W/kg
ICOM 640QR4 FA-76UC 485MHz Body BP303N/Body - Belt Clip Touching, d=0mm, Pin=5W (ES-Probe)/Zoom Scan (5x5x7) (7x6x7)/Cube 0: Measurement grid: dx=7.5mm, dy=7.5mm, dz=5mm
Reference Value = 49.84 V/m; Power Drift = -0.33 dB
Peak SAR (extrapolated) = 3.12 W/kg
SAR(1 g) = 2.17 W/kg; SAR(10 g) = 1.58 W/kg (SAR corrected for target medium)
Maximum value of SAR (measured) = 2.43 W/kg

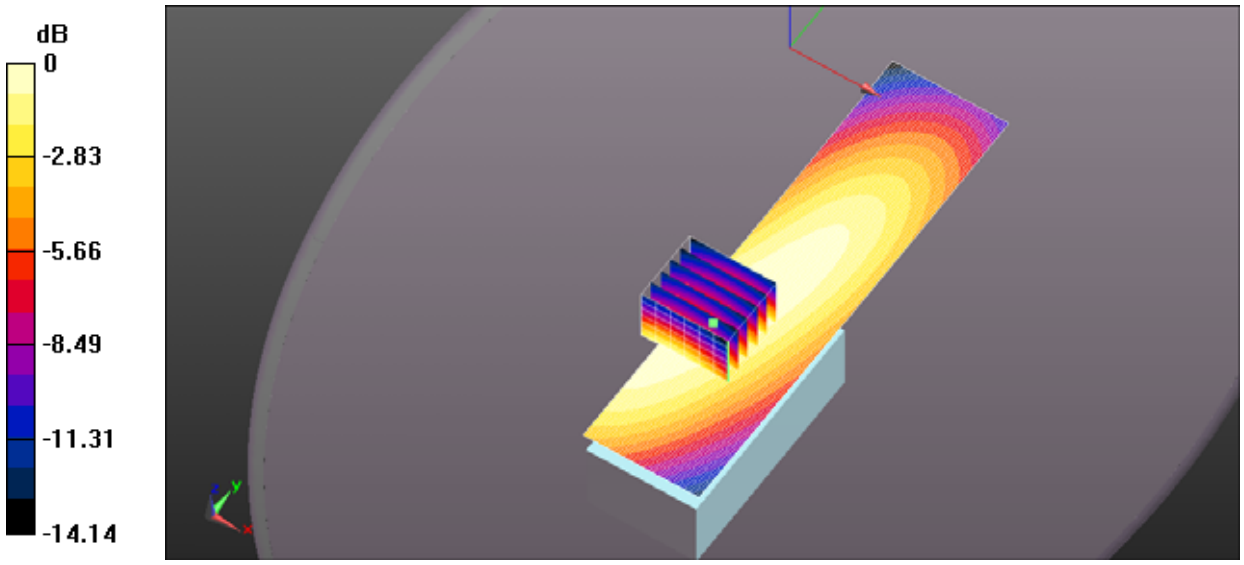

0 dB = 2.53 W/kg = 4.03 dBW/kg

File Name: FA-S76UC 520MHz.da52:0

DUT: DUT Sample Brick w. Antenna; Type: Sample; Serial: IMEI Number

Communication System: UID 10000, CW; Frequency: 520 MHz; Duty Cycle: 1:1
Medium parameters used: f = 520 MHz; σ = 1.029 S/m; ε_r = 54.048; ρ = 1000 kg/m^3 ; Phantom section: Flat Section ; Measurement Standard: DASY5 (IEEE/IEC/ANSI C63.19-2007)

DASY Configuration:

- Probe: ES3DV3 - SN3250; ConvF(7.12, 7.12, 7.12); Calibrated: 3/10/2025;
- Sensor-Surface: 3mm (Mechanical Surface Detection)
- Electronics: DAE4 Sn874; Calibrated: 7/29/2025
- Phantom: ELI 4.0; Type: QD OVA 001 BB; Serial: 1057
- DASY52 52.10.0(1446); SEMCAD X 14.6.10(7417)

ICOM 640QR4 FA-76UC 520MHz Body BP303N/Body - Belt Clip Touching, d=0mm, Pin=5W (ES-Probe)/Area Scan (41x161x1): Interpolated grid: dx=1.500 mm, dy=1.500 mm
Maximum value of SAR (interpolated) = 2.65 W/kg
ICOM 640QR4 FA-76UC 520MHz Body BP303N/Body - Belt Clip Touching, d=0mm, Pin=5W (ES-Probe)/Zoom Scan (5x5x7) (6x6x7)/Cube 0: Measurement grid: dx=7.5mm, dy=7.5mm, dz=5mm
Reference Value = 49.68 V/m; Power Drift = -0.51 dB
Peak SAR (extrapolated) = 3.19 W/kg
SAR(1 g) = 2.28 W/kg; SAR(10 g) = 1.65 W/kg (SAR corrected for target medium)
Maximum value of SAR (measured) = 2.57 W/kg

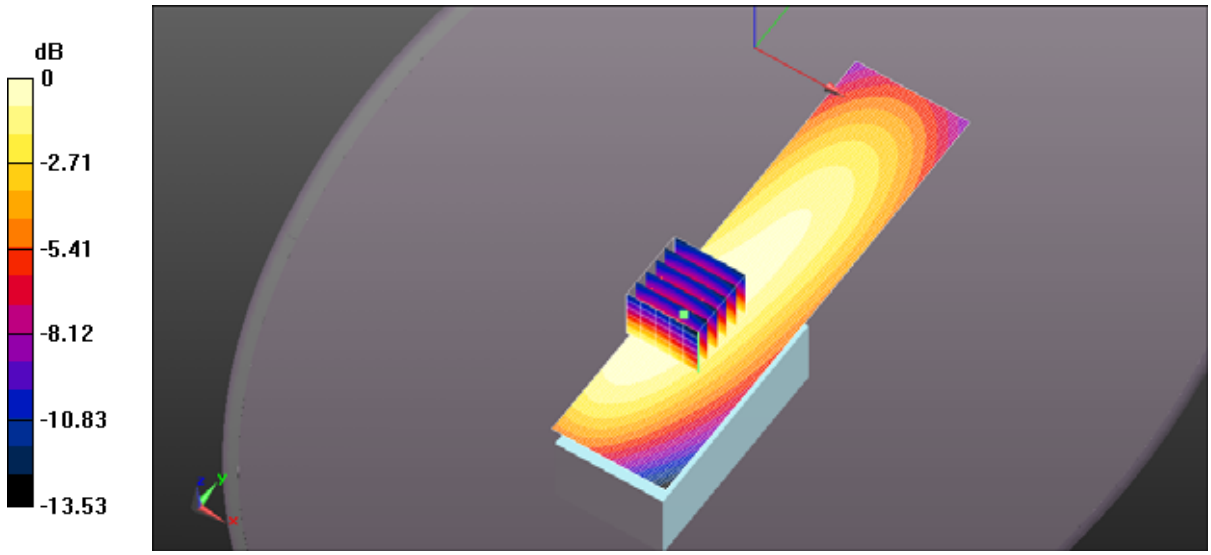

0 dB = 2.65 W/kg = 4.23 dBW/kg

File Name: 420MHz antenna FA-S76UC 400MHz.da52:0

DUT: DUT Sample Brick w. Antenna; Type: Sample; Serial: IMEI Number

Communication System: UID 10000, CW; Frequency: 400 MHz; Duty Cycle: 1:1
Medium parameters used: f = 400 MHz; σ = 0.926 S/m; ε_r = 55.945; ρ = 1000 kg/m^3 ; Phantom section: Flat Section ; Measurement Standard: DASY5 (IEEE/IEC/ANSI C63.19-2007)

DASY Configuration:

- Probe: ES3DV3 - SN3250; ConvF(7.12, 7.12, 7.12); Calibrated: 3/10/2025;
- Sensor-Surface: 3mm (Mechanical Surface Detection)
- Electronics: DAE4 Sn874; Calibrated: 7/29/2025
- Phantom: ELI 4.0; Type: QD OVA 001 BB; Serial: 1057
- DASY52 52.10.0(1446); SEMCAD X 14.6.10(7417)

ICOM 640QR4 420MHz FA-76UC 400MHz Body BP303N/Body - Belt Clip Touching, d=0mm, Pin=5W (ES-Probe)/Area Scan (41x161x1): Interpolated grid: dx=1.500 mm, dy=1.500 mm
Maximum value of SAR (interpolated) = 9.62 W/kg
ICOM 640QR4 420MHz FA-76UC 400MHz Body BP303N/Body - Belt Clip Touching, d=0mm, Pin=5W (ES-Probe)/Zoom Scan (5x5x7) (7x6x7)/Cube 0: Measurement grid: dx=7.5mm, dy=7.5mm, dz=5mm
Reference Value = 100.0 V/m; Power Drift = -0.32 dB
Peak SAR (extrapolated) = 11.9 W/kg
SAR(1 g) = 8.29 W/kg; SAR(10 g) = 6.09 W/kg (SAR corrected for target medium)
Maximum value of SAR (measured) = 9.33 W/kg

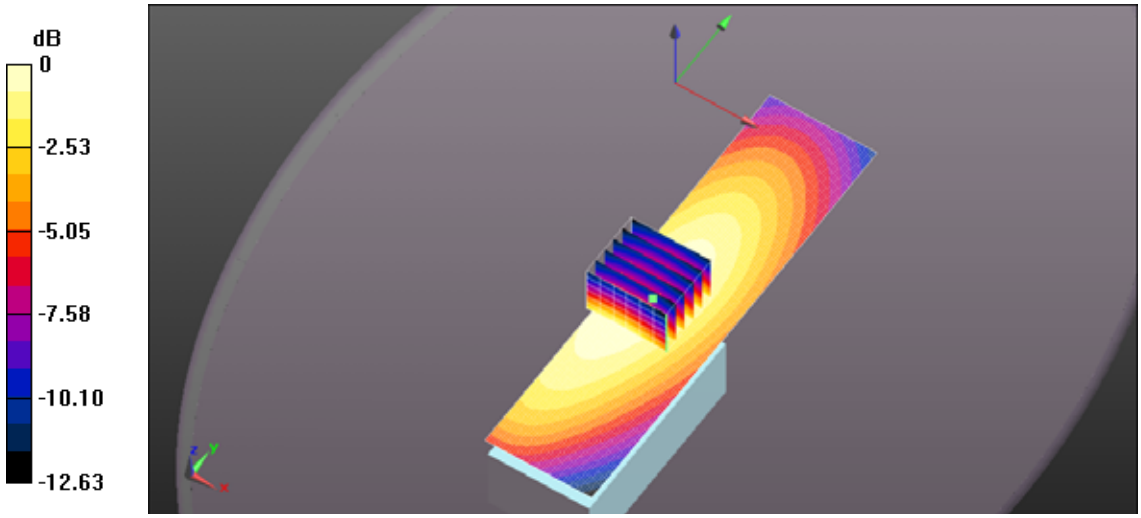

0 dB = 9.62 W/kg = 9.83 dBW/kg

File Name: 420MHz antenna FA-S76UC 415MHz.da52:0

DUT: DUT Sample Brick w. Antenna; Type: Sample; Serial: IMEI Number

Communication System: UID 10000, CW; Frequency: 415 MHz; Duty Cycle: 1:1
Medium parameters used: f = 415 MHz; σ = 0.936 S/m; ε_r = 55.507; ρ = 1000 kg/m^3 ; Phantom section: Flat Section ; Measurement Standard: DASY5 (IEEE/IEC/ANSI C63.19-2007)

DASY Configuration:

- Probe: ES3DV3 - SN3250; ConvF(7.12, 7.12, 7.12); Calibrated: 3/10/2025;
- Sensor-Surface: 3mm (Mechanical Surface Detection)
- Electronics: DAE4 Sn874; Calibrated: 7/29/2025
- Phantom: ELI 4.0; Type: QD OVA 001 BB; Serial: 1057
- DASY52 52.10.0(1446); SEMCAD X 14.6.10(7417)

ICOM 640QR4 420MHz FA-76UC 415MHz Body BP303N/Body - Belt Clip Touching, d=0mm, Pin=5W (ES-Probe)/Area Scan (41x161x1): Interpolated grid: dx=1.500 mm, dy=1.500 mm
Maximum value of SAR (interpolated) = 8.60 W/kg
ICOM 640QR4 420MHz FA-76UC 415MHz Body BP303N/Body - Belt Clip Touching, d=0mm, Pin=5W (ES-Probe)/Zoom Scan (5x5x7) (6x6x7)/Cube 0: Measurement grid: dx=7.5mm, dy=7.5mm, dz=5mm
Reference Value = 93.61 V/m; Power Drift = -0.22 dB
Peak SAR (extrapolated) = 10.9 W/kg
SAR(1 g) = 7.53 W/kg; SAR(10 g) = 5.53 W/kg (SAR corrected for target medium)
Maximum value of SAR (measured) = 8.46 W/kg

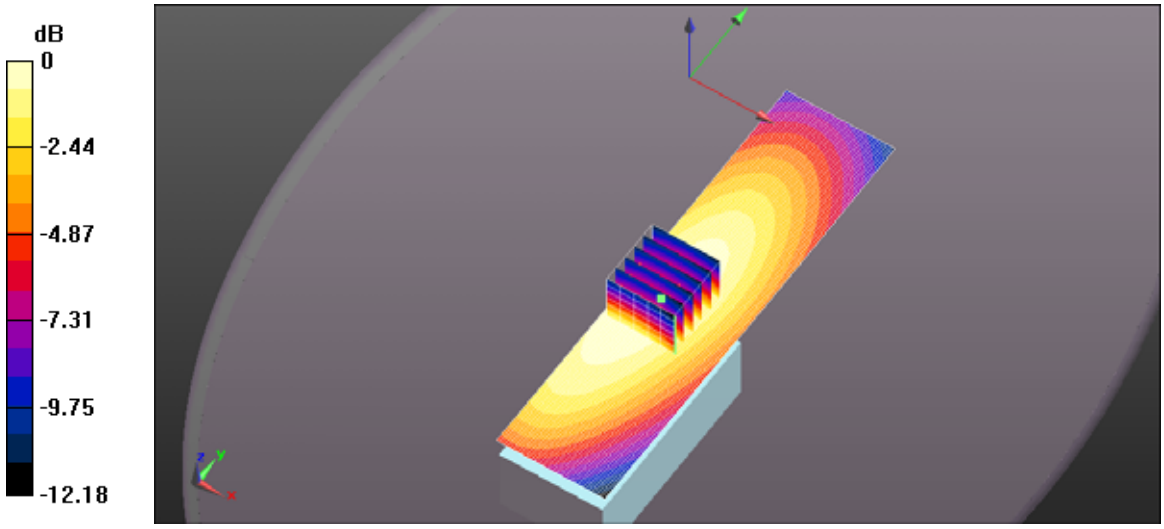

0 dB = 8.60 W/kg = 9.34 dBW/kg

File Name: 420MHz antenna FA-S76UC 432.5MHz.da52:0

DUT: DUT Sample Brick w. Antenna; Type: Sample; Serial: IMEI Number

Communication System: UID 10000, CW; Frequency: 432.5 MHz; Duty Cycle: 1:1
Medium parameters used (interpolated): f = 432.5 MHz; σ = 0.949 S/m; ε_r = 55.27; ρ = 1000 kg/m^3 ;
Phantom section: Flat Section ; Measurement Standard: DASY5 (IEEE/IEC/ANSI C63.19-2007)

DASY Configuration:

- Probe: ES3DV3 - SN3250; ConvF(7.12, 7.12, 7.12); Calibrated: 3/10/2025;
- Sensor-Surface: 3mm (Mechanical Surface Detection)
- Electronics: DAE4 Sn874; Calibrated: 7/29/2025
- Phantom: ELI 4.0; Type: QD OVA 001 BB; Serial: 1057
- DASY52 52.10.0(1446); SEMCAD X 14.6.10(7417)

ICOM 640QR4 420MHz FA-76UC 432.5MHz Body BP303N/Body - Belt Clip Touching, d=0mm,Pin=5W (ES-Probe)/Area Scan (41x161x1): Interpolated grid: dx=1.500 mm, dy=1.500 mm
Info: Interpolated medium parameters used for SAR evaluation.
Maximum value of SAR (interpolated) = 8.62 W/kg
ICOM 640QR4 420MHz FA-76UC 432.5MHz Body BP303N/Body - Belt Clip Touching, d=0mm, Pin=5W (ES-Probe)/Zoom Scan (5x5x7) (6x5x7)/Cube 0: Measurement grid: dx=7.5mm, dy=7.5mm, dz=5mm
Reference Value = 94.47 V/m; Power Drift = -0.53 dB
Peak SAR (extrapolated) = 10.7 W/kg
SAR(1 g) = 7.48 W/kg; SAR(10 g) = 5.48 W/kg (SAR corrected for target medium)
Info: Interpolated medium parameters used for SAR evaluation.
Maximum value of SAR (measured) = 8.40 W/kg

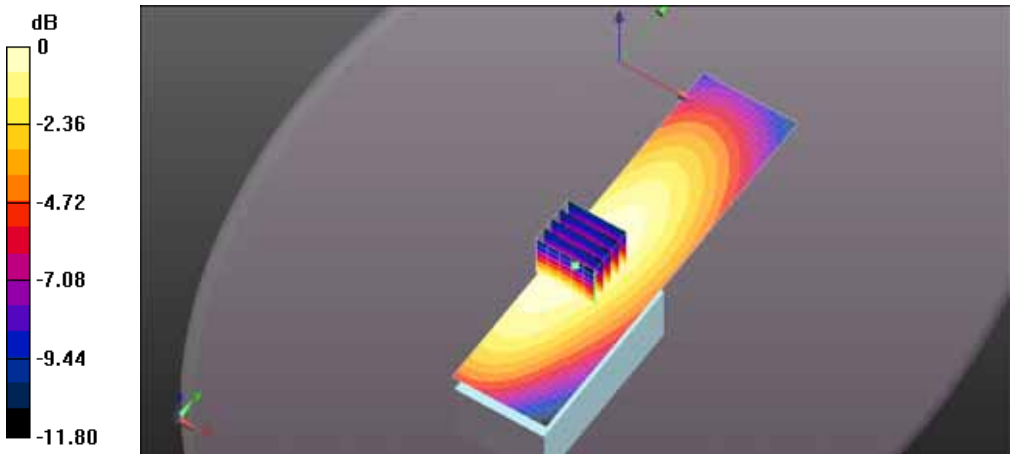

0 dB = 8.62 W/kg = 9.35 dBW/kg

File Name: 420MHz antenna FA-S76UC 450MHz.da52:0

DUT: DUT Sample Brick w. Antenna; Type: Sample; Serial: IMEI Number

Communication System: UID 10000, CW; Frequency: 450 MHz; Duty Cycle: 1:1
Medium parameters used: f = 450 MHz; σ = 0.962 S/m; ε_r = 55.014; ρ = 1000 kg/m^3 ; Phantom section: Flat Section ; Measurement Standard: DASY5 (IEEE/IEC/ANSI C63.19-2007)

DASY Configuration:

- Probe: ES3DV3 - SN3250; ConvF(7.12, 7.12, 7.12); Calibrated: 3/10/2025;
- Sensor-Surface: 3mm (Mechanical Surface Detection)
- Electronics: DAE4 Sn874; Calibrated: 7/29/2025
- Phantom: ELI 4.0; Type: QD OVA 001 BB; Serial: 1057
- DASY52 52.10.0(1446); SEMCAD X 14.6.10(7417)

ICOM 640QR4 420MHz FA-76UC 450MHz Body BP303N/Body - Belt Clip Touching, d=0mm, Pin=5W (ES-Probe)/Area Scan (51x161x1): Interpolated grid: dx=1.500 mm, dy=1.500 mm
Maximum value of SAR (interpolated) = 6.02 W/kg
ICOM 640QR4 420MHz FA-76UC 450MHz Body BP303N/Body - Belt Clip Touching, d=0mm, Pin=5W (ES-Probe)/Zoom Scan (5x5x7) (6x5x7)/Cube 0: Measurement grid: dx=7.5mm, dy=7.5mm, dz=5mm
Reference Value = 75.23 V/m; Power Drift = -0.61 dB
Peak SAR (extrapolated) = 7.24 W/kg
SAR(1 g) = 4.96 W/kg; SAR(10 g) = 3.65 W/kg (SAR corrected for target medium)
Maximum value of SAR (measured) = 5.70 W/kg

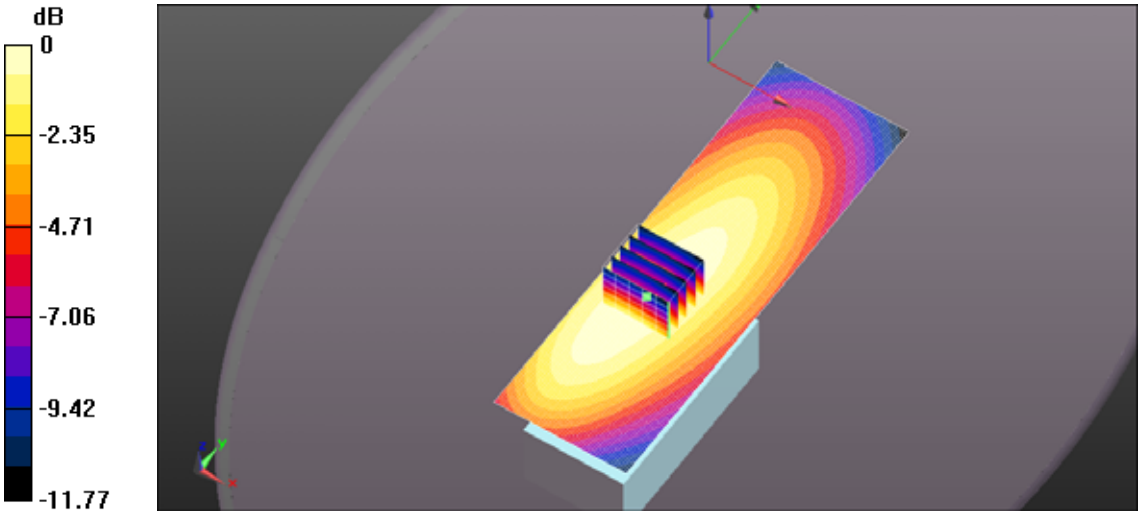

0 dB = 6.02 W/kg = 7.80 dBW/kg

File Name: 420MHz antenna FA-S76UC 485MHz.da52:0

DUT: DUT Sample Brick w. Antenna; Type: Sample; Serial: IMEI Number

Communication System: UID 10000, CW; Frequency: 485 MHz; Duty Cycle: 1:1
Medium parameters used: f = 485 MHz; σ = 1.001 S/m; ε_r = 54.553; ρ = 1000 kg/m^3 ; Phantom section: Flat Section ; Measurement Standard: DASY5 (IEEE/IEC/ANSI C63.19-2007)

DASY Configuration:

- Probe: ES3DV3 - SN3250; ConvF(7.12, 7.12, 7.12); Calibrated: 3/10/2025;
- Sensor-Surface: 3mm (Mechanical Surface Detection)
- Electronics: DAE4 Sn874; Calibrated: 7/29/2025
- Phantom: ELI 4.0; Type: QD OVA 001 BB; Serial: 1057
- DASY52 52.10.0(1446); SEMCAD X 14.6.10(7417)

ICOM 640QR4 420MHz FA-76UC 485MHz Body BP303N/Body - Belt Clip Touching, d=0mm, Pin=5W (ES-Probe)/Area Scan (41x161x1): Interpolated grid: dx=1.500 mm, dy=1.500 mm
Maximum value of SAR (interpolated) = 4.03 W/kg
ICOM 640QR4 420MHz FA-76UC 485MHz Body BP303N/Body - Belt Clip Touching, d=0mm, Pin=5W (ES-Probe)/Zoom Scan (5x5x7) (6x5x7)/Cube 0: Measurement grid: dx=7.5mm, dy=7.5mm, dz=5mm
Reference Value = 59.55 V/m; Power Drift = -0.31 dB
Peak SAR (extrapolated) = 5.03 W/kg
SAR(1 g) = 3.5 W/kg; SAR(10 g) = 2.55 W/kg (SAR corrected for target medium)
Maximum value of SAR (measured) = 3.95 W/kg

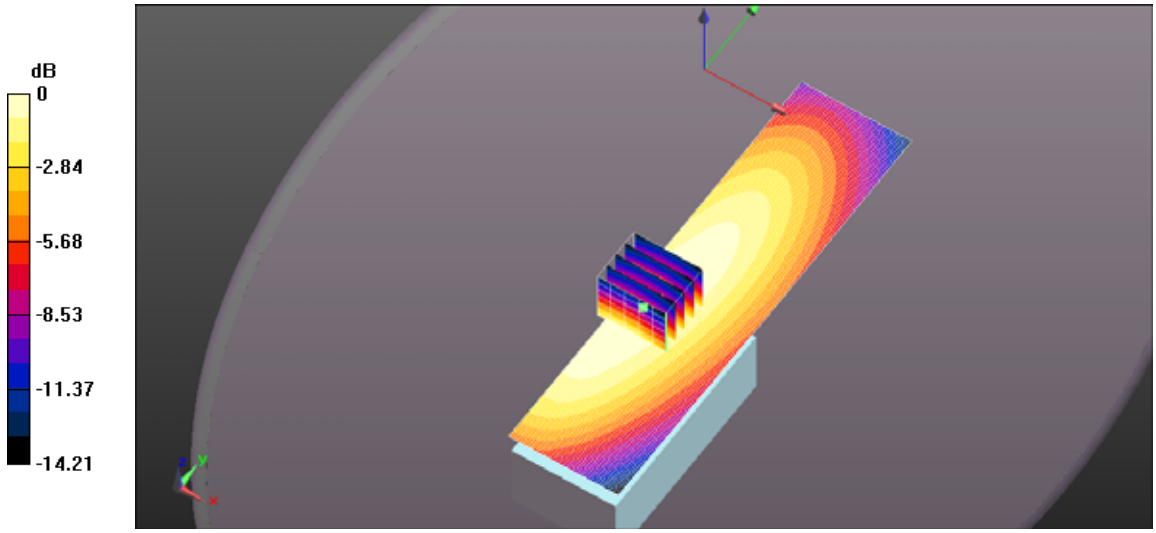

0 dB = 4.03 W/kg = 6.06 dBW/kg

File Name: 420MHz antenna FA-S76UC 520MHz.da52:0

DUT: DUT Sample Brick w. Antenna; Type: Sample; Serial: IMEI Number

Communication System: UID 10000, CW; Frequency: 520 MHz; Duty Cycle: 1:1
Medium parameters used: f = 520 MHz; σ = 0.983 S/m; ε_r = 54.065; ρ = 1000 kg/m^3 ; Phantom section: Flat Section ; Measurement Standard: DASY5 (IEEE/IEC/ANSI C63.19-2007)

DASY Configuration:

- Probe: ES3DV3 - SN3250; ConvF(7.12, 7.12, 7.12); Calibrated: 3/10/2025;
- Sensor-Surface: 3mm (Mechanical Surface Detection)
- Electronics: DAE4 Sn874; Calibrated: 7/29/2025
- Phantom: ELI 4.0; Type: QD OVA 001 BB; Serial: 1057
- DASY52 52.10.0(1446); SEMCAD X 14.6.10(7417)

ICOM 640QR4 420MHz FA-76UC 520MHz Body BP303N/Body - Belt Clip Touching, d=0mm, Pin=5W (ES-Probe)/Area Scan (41x161x1): Interpolated grid: dx=1.500 mm, dy=1.500 mm
Maximum value of SAR (interpolated) = 4.23 W/kg
ICOM 640QR4 420MHz FA-76UC 520MHz Body BP303N/Body - Belt Clip Touching, d=0mm, Pin=5W (ES-Probe)/Zoom Scan (5x5x7) (6x6x7)/Cube 0: Measurement grid: dx=7.5mm, dy=7.5mm, dz=5mm
Reference Value = 63.34 V/m; Power Drift = -0.66 dB
Peak SAR (extrapolated) = 5.00 W/kg
SAR(1 g) = 3.6 W/kg; SAR(10 g) = 2.64 W/kg (SAR corrected for target medium)
Maximum value of SAR (measured) = 4.03 W/kg

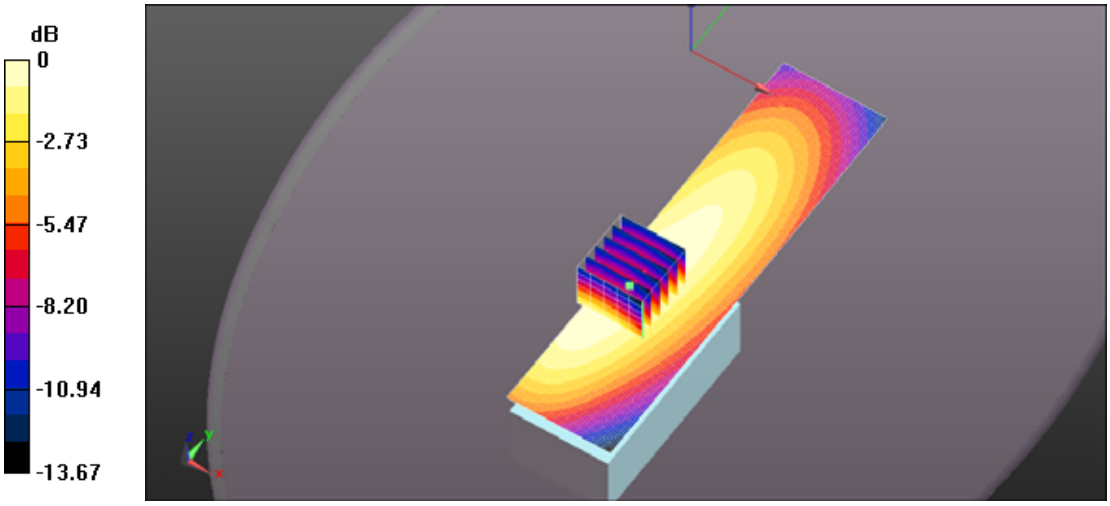

0 dB = 4.23 W/kg = 6.26 dBW/kg

File Name: 440MHz antenna FA-S76UC 400MHz.da52:0

DUT: DUT Sample Brick w. Antenna; Type: Sample; Serial: IMEI Number

Communication System: UID 10000, CW; Frequency: 400 MHz; Duty Cycle: 1:1
Medium parameters used: f = 400 MHz; σ = 0.875 S/m; ε_r = 56.091; ρ = 1000 kg/m^3 ; Phantom section: Flat Section ; Measurement Standard: DASY5 (IEEE/IEC/ANSI C63.19-2007)

DASY Configuration:

- Probe: ES3DV3 - SN3250; ConvF(7.12, 7.12, 7.12); Calibrated: 3/10/2025;
- Sensor-Surface: 3mm (Mechanical Surface Detection)
- Electronics: DAE4 Sn874; Calibrated: 7/29/2025
- Phantom: ELI 4.0; Type: QD OVA 001 BB; Serial: 1057
- DASY52 52.10.0(1446); SEMCAD X 14.6.10(7417)

ICOM 640QR4 440MHz FA-76UC 400MHz Body BP303N/Body - Belt Clip Touching, d=0mm, Pin=5W (ES-Probe)/Area Scan (41x161x1): Interpolated grid: dx=1.500 mm, dy=1.500 mm
Maximum value of SAR (interpolated) = 9.63 W/kg
ICOM 640QR4 440MHz FA-76UC 400MHz Body BP303N/Body - Belt Clip Touching, d=0mm, Pin=5W (ES-Probe)/Zoom Scan (5x5x7) (6x6x7)/Cube 0: Measurement grid: dx=7.5mm, dy=7.5mm, dz=5mm
Reference Value = 102.5 V/m; Power Drift = -0.37 dB
Peak SAR (extrapolated) = 11.9 W/kg
SAR(1 g) = 8.35 W/kg; SAR(10 g) = 6.2 W/kg (SAR corrected for target medium)
Maximum value of SAR (measured) = 9.37 W/kg

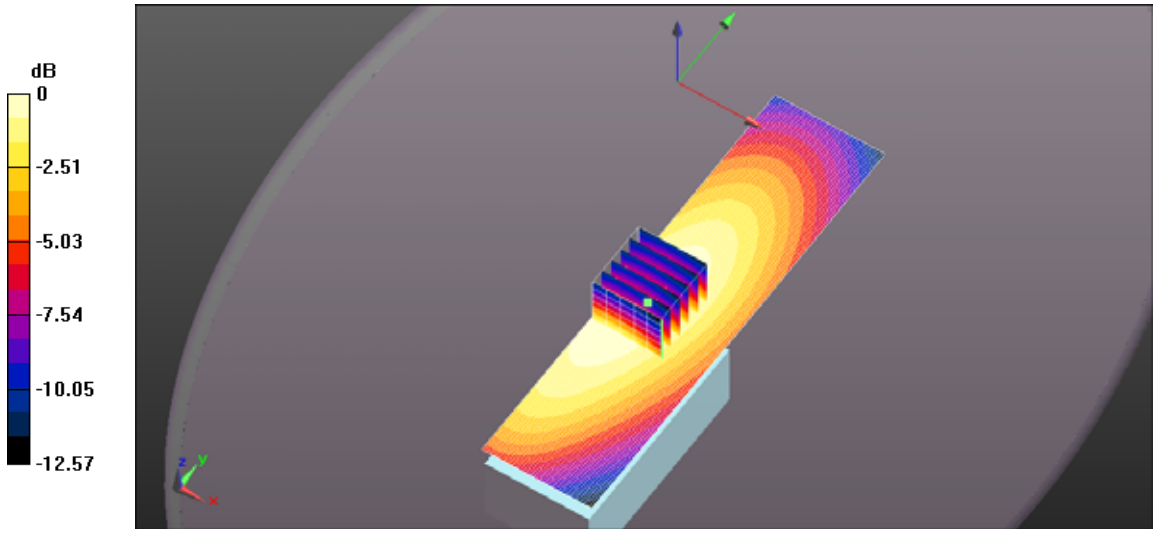

0 dB = 9.63 W/kg = 9.84 dBW/kg

File Name: 440MHz antenna FA-S76UC 415MHz.da52:0

DUT: DUT Sample Brick w. Antenna; Type: Sample; Serial: IMEI Number

Communication System: UID 10000, CW; Frequency: 415 MHz; Duty Cycle: 1:1
Medium parameters used: f = 415 MHz; σ = 0.936 S/m; ε_r = 55.507; ρ = 1000 kg/m^3 ; Phantom section: Flat Section ; Measurement Standard: DASY5 (IEEE/IEC/ANSI C63.19-2007)

DASY Configuration:

- Probe: ES3DV3 - SN3250; ConvF(7.12, 7.12, 7.12); Calibrated: 3/10/2025;
- Sensor-Surface: 3mm (Mechanical Surface Detection)
- Electronics: DAE4 Sn874; Calibrated: 7/29/2025
- Phantom: ELI 4.0; Type: QD OVA 001 BB; Serial: 1057
- DASY52 52.10.0(1446); SEMCAD X 14.6.10(7417)

ICOM 640QR4 440MHz FA-76UC 415MHz Body BP303N/Body - Belt Clip Touching, d=0mm, Pin=5W (ES-Probe)/Area Scan (41x161x1): Interpolated grid: dx=1.500 mm, dy=1.500 mm
Maximum value of SAR (interpolated) = 9.32 W/kg
ICOM 640QR4 440MHz FA-76UC 415MHz Body BP303N/Body - Belt Clip Touching, d=0mm, Pin=5W (ES-Probe)/Zoom Scan (5x5x7) (7x6x7)/Cube 0: Measurement grid: dx=7.5mm, dy=7.5mm, dz=5mm
Reference Value = 102.1 V/m; Power Drift = -0.41 dB
Peak SAR (extrapolated) = 11.5 W/kg
SAR(1 g) = 8 W/kg; SAR(10 g) = 5.85 W/kg (SAR corrected for target medium)
Maximum value of SAR (measured) = 8.97 W/kg

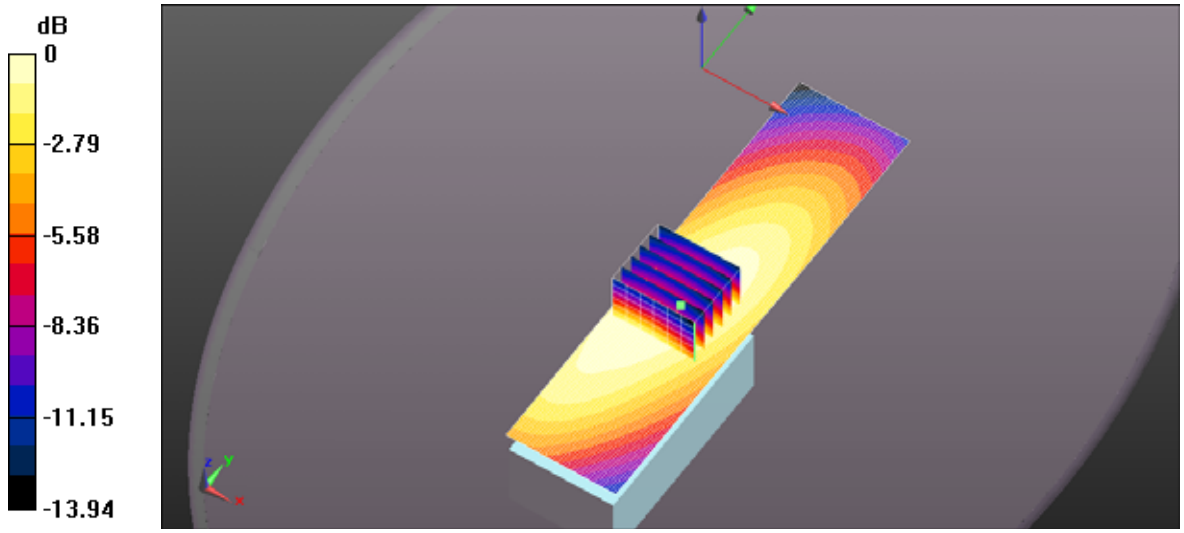

0 dB = 9.32 W/kg = 9.70 dBW/kg

File Name: 440MHz antenna FA-S76UC 440MHz.da52:0

DUT: DUT Sample Brick w. Antenna; Type: Sample; Serial: IMEI Number

Communication System: UID 10000, CW; Frequency: 440 MHz; Duty Cycle: 1:1
Medium parameters used: f = 440 MHz; σ = 0.955 S/m; ε_r = 55.173; ρ = 1000 kg/m^3 ; Phantom section: Flat Section ; Measurement Standard: DASY5 (IEEE/IEC/ANSI C63.19-2007)

DASY Configuration:

- Probe: ES3DV3 - SN3250; ConvF(7.12, 7.12, 7.12); Calibrated: 3/10/2025;
- Sensor-Surface: 3mm (Mechanical Surface Detection)
- Electronics: DAE4 Sn874; Calibrated: 7/29/2025
- Phantom: ELI 4.0; Type: QD OVA 001 BB; Serial: 1057
- DASY52 52.10.0(1446); SEMCAD X 14.6.10(7417)

ICOM 640QR4 440MHz FA-76UC 440MHz Body BP303N/Body - Belt Clip Touching, d=0mm, Pin=5W (ES-Probe)/Area Scan (41x161x1): Interpolated grid: dx=1.500 mm, dy=1.500 mm
Maximum value of SAR (interpolated) = 7.32 W/kg
ICOM 640QR4 440MHz FA-76UC 440MHz Body BP303N/Body - Belt Clip Touching, d=0mm, Pin=5W (ES-Probe)/Zoom Scan (5x5x7) (6x5x7)/Cube 0: Measurement grid: dx=7.5mm, dy=7.5mm, dz=5mm
Reference Value = 86.00 V/m; Power Drift = -0.39 dB
Peak SAR (extrapolated) = 9.02 W/kg
SAR(1 g) = 6.28 W/kg; SAR(10 g) = 4.6 W/kg (SAR corrected for target medium)
Maximum value of SAR (measured) = 7.04 W/kg

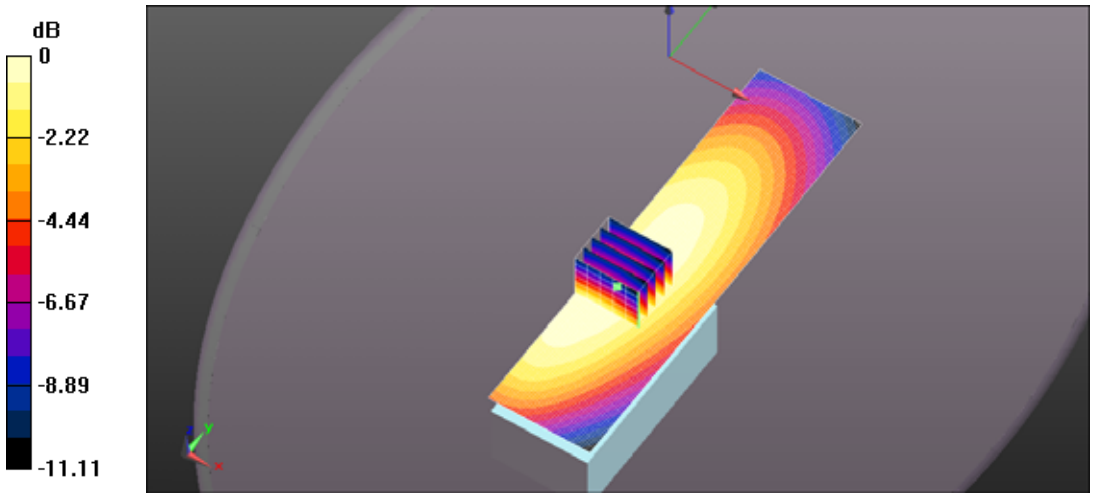

0 dB = 7.32 W/kg = 8.65 dBW/kg

File Name: 440MHz antenna FA-S76UC 467.5MHz.da52:0

DUT: DUT Sample Brick w. Antenna; Type: Sample; Serial: IMEI Number

Communication System: UID 10000, CW; Frequency: 467.5 MHz; Duty Cycle: 1:1
Medium parameters used (interpolated): f = 467.5 MHz; σ = 0.983 S/m; ε_r = 54.798; ρ = 1000 kg/m^3 ;
Phantom section: Flat Section ; Measurement Standard: DASY5 (IEEE/IEC/ANSI C63.19-2007)

DASY Configuration:

- Probe: ES3DV3 - SN3250; ConvF(7.12, 7.12, 7.12); Calibrated: 3/10/2025;
- Sensor-Surface: 3mm (Mechanical Surface Detection)
- Electronics: DAE4 Sn874; Calibrated: 7/29/2025
- Phantom: ELI 4.0; Type: QD OVA 001 BB; Serial: 1057
- DASY52 52.10.0(1446); SEMCAD X 14.6.10(7417)

ICOM 640QR4 440MHz FA-76UC 467.5MHz Body BP303N/Body - Belt Clip Touching, d=0mm, Pin=5W (ES-Probe)/Area Scan (41x161x1): Interpolated grid: dx=1.500 mm, dy=1.500 mm
Info: Interpolated medium parameters used for SAR evaluation.
Maximum value of SAR (interpolated) = 4.64 W/kg
ICOM 640QR4 440MHz FA-76UC 467.5MHz Body BP303N/Body - Belt Clip Touching, d=0mm, Pin=5W (ES-Probe)/Zoom Scan (5x5x7) (6x5x7)/Cube 0: Measurement grid: dx=7.5mm, dy=7.5mm, dz=5mm
Reference Value = 66.05 V/m; Power Drift = -0.44 dB
Peak SAR (extrapolated) = 5.73 W/kg
SAR(1 g) = 3.94 W/kg; SAR(10 g) = 2.85 W/kg (SAR corrected for target medium)
Info: Interpolated medium parameters used for SAR evaluation.
Maximum value of SAR (measured) = 4.46 W/kg

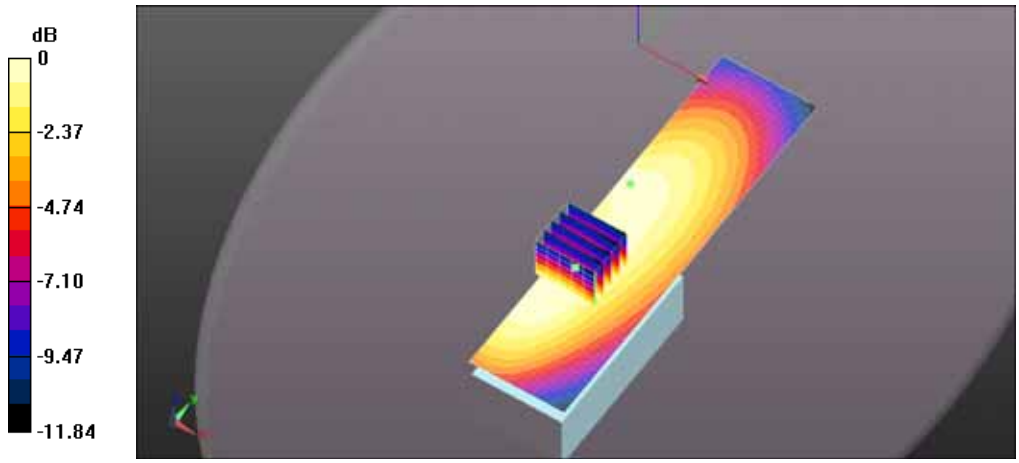

0 dB = 4.64 W/kg = 6.67 dBW/kg

File Name: 440MHz antenna FA-S76UC 502.5MHz.da52:0

DUT: DUT Sample Brick w. Antenna; Type: Sample; Serial: IMEI Number

Communication System: UID 10000, CW; Frequency: 502.5 MHz; Duty Cycle: 1:1
Medium parameters used (interpolated): f = 502.5 MHz; σ = 1.017 S/m; ε_r = 54.304; ρ = 1000 kg/m^3 ;
Phantom section: Flat Section ; Measurement Standard: DASY5 (IEEE/IEC/ANSI C63.19-2007)

DASY Configuration:

- Probe: ES3DV3 - SN3250; ConvF(7.12, 7.12, 7.12); Calibrated: 3/10/2025;
- Sensor-Surface: 3mm (Mechanical Surface Detection)
- Electronics: DAE4 Sn874; Calibrated: 7/29/2025
- Phantom: ELI 4.0; Type: QD OVA 001 BB; Serial: 1057
- DASY52 52.10.0(1446); SEMCAD X 14.6.10(7417)

ICOM 640QR4 440MHz FA-76UC 502.5MHz Body BP303N/Body - Belt Clip Touching, d=0mm, Pin=5W (ES-Probe)/Area Scan (41x161x1): Interpolated grid: dx=1.500 mm, dy=1.500 mm
Info: Interpolated medium parameters used for SAR evaluation.
Maximum value of SAR (interpolated) = 4.60 W/kg
ICOM 640QR4 440MHz FA-76UC 502.5MHz Body BP303N/Body - Belt Clip Touching, d=0mm, Pin=5W (ES-Probe)/Zoom Scan (5x5x7) (6x6x7)/Cube 0: Measurement grid: dx=7.5mm, dy=7.5mm, dz=5mm
Reference Value = 65.06 V/m; Power Drift = -0.03 dB
Peak SAR (extrapolated) = 5.75 W/kg
SAR(1 g) = 3.96 W/kg; SAR(10 g) = 2.87 W/kg (SAR corrected for target medium)
Info: Interpolated medium parameters used for SAR evaluation.
Maximum value of SAR (measured) = 4.45 W/kg

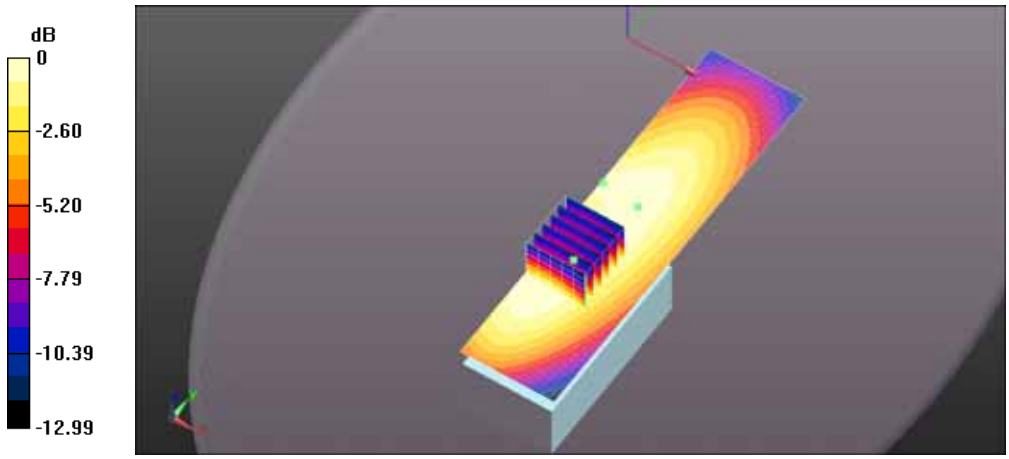

0 dB = 4.60 W/kg = 6.63 dBW/kg

File Name: 440MHz antenna FA-S76UC 520MHz.da52:0

DUT: DUT Sample Brick w. Antenna; Type: Sample; Serial: IMEI Number

Communication System: UID 10000, CW; Frequency: 520 MHz; Duty Cycle: 1:1
Medium parameters used: f = 520 MHz; σ = 0.983 S/m; ε_r = 54.065; ρ = 1000 kg/m^3 ; Phantom section: Flat Section ; Measurement Standard: DASY5 (IEEE/IEC/ANSI C63.19-2007)

DASY Configuration:

- Probe: ES3DV3 - SN3250; ConvF(7.12, 7.12, 7.12); Calibrated: 3/10/2025;
- Sensor-Surface: 3mm (Mechanical Surface Detection)
- Electronics: DAE4 Sn874; Calibrated: 7/29/2025
- Phantom: ELI 4.0; Type: QD OVA 001 BB; Serial: 1057
- DASY52 52.10.0(1446); SEMCAD X 14.6.10(7417)

ICOM 640QR4 440MHz FA-76UC 520MHz Body BP303N/Body - Belt Clip Touching, d=0mm, Pin=5W (ES-Probe)/Area Scan (41x161x1): Interpolated grid: dx=1.500 mm, dy=1.500 mm
Maximum value of SAR (interpolated) = 4.94 W/kg
ICOM 640QR4 440MHz FA-76UC 520MHz Body BP303N/Body - Belt Clip Touching, d=0mm, Pin=5W (ES-Probe)/Zoom Scan (5x5x7) (6x5x7)/Cube 0: Measurement grid: dx=7.5mm, dy=7.5mm, dz=5mm
Reference Value = 67.58 V/m; Power Drift = -0.45 dB
Peak SAR (extrapolated) = 5.93 W/kg
SAR(1 g) = 4.26 W/kg; SAR(10 g) = 3.12 W/kg (SAR corrected for target medium)
Maximum value of SAR (measured) = 4.79 W/kg

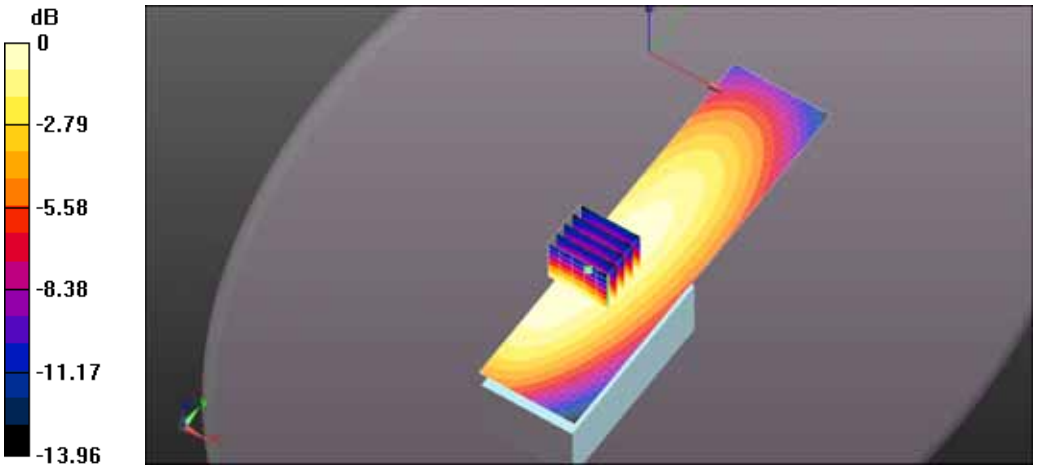

0 dB = 4.94 W/kg = 6.93 dBW/kg

File Name: 460MHz antenna FA-S76UC 400MHz.da52:0

DUT: DUT Sample Brick w. Antenna; Type: Sample; Serial: IMEI Number

Communication System: UID 10000, CW; Frequency: 400 MHz; Duty Cycle: 1:1
Medium parameters used: f = 400 MHz; σ = 0.926 S/m; ε_r = 55.945; ρ = 1000 kg/m^3 ; Phantom section: Flat Section ; Measurement Standard: DASY5 (IEEE/IEC/ANSI C63.19-2007)

DASY Configuration:

- Probe: ES3DV3 - SN3250; ConvF(7.12, 7.12, 7.12); Calibrated: 3/10/2025;
- Sensor-Surface: 3mm (Mechanical Surface Detection)
- Electronics: DAE4 Sn874; Calibrated: 7/29/2025
- Phantom: ELI 4.0; Type: QD OVA 001 BB; Serial: 1057
- DASY52 52.10.0(1446); SEMCAD X 14.6.10(7417)

ICOM 640QR4 460MHz FA-76UC 400MHz Body BP303N/Body - Belt Clip Touching, d=0mm, Pin=5W (ES-Probe)/Area Scan (41x161x1): Interpolated grid: dx=1.500 mm, dy=1.500 mm
Maximum value of SAR (interpolated) = 9.84 W/kg
ICOM 640QR4 460MHz FA-76UC 400MHz Body BP303N/Body - Belt Clip Touching, d=0mm, Pin=5W (ES-Probe)/Zoom Scan (5x5x7) (6x5x7)/Cube 0: Measurement grid: dx=7.5mm, dy=7.5mm, dz=5mm
Reference Value = 101.9 V/m; Power Drift = -0.17 dB
Peak SAR (extrapolated) = 12.3 W/kg
SAR(1 g) = 8.58 W/kg; SAR(10 g) = 6.33 W/kg (SAR corrected for target medium)
Maximum value of SAR (measured) = 9.63 W/kg

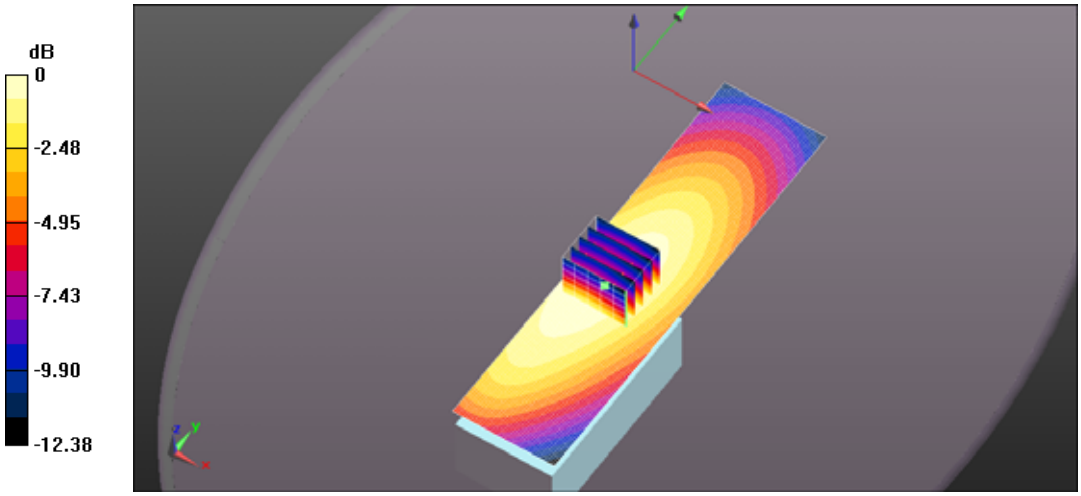

0 dB = 9.84 W/kg = 9.93 dBW/kg

File Name: 460MHz antenna FA-S76UC 415MHz.da52:0

DUT: DUT Sample Brick w. Antenna; Type: Sample; Serial: IMEI Number

Communication System: UID 10000, CW; Frequency: 415 MHz; Duty Cycle: 1:1
Medium parameters used: f = 415 MHz; σ = 0.936 S/m; ε_r = 55.507; ρ = 1000 kg/m^3 ; Phantom section: Flat Section ; Measurement Standard: DASY5 (IEEE/IEC/ANSI C63.19-2007)

DASY Configuration:

- Probe: ES3DV3 - SN3250; ConvF(7.12, 7.12, 7.12); Calibrated: 3/10/2025;
- Sensor-Surface: 3mm (Mechanical Surface Detection)
- Electronics: DAE4 Sn874; Calibrated: 7/29/2025
- Phantom: ELI 4.0; Type: QD OVA 001 BB; Serial: 1057
- DASY52 52.10.0(1446); SEMCAD X 14.6.10(7417)

ICOM 640QR4 460MHz FA-76UC 415MHz Body BP303N/Body - Belt Clip Touching, d=0mm, Pin=5W (ES-Probe)/Area Scan (41x161x1): Interpolated grid: dx=1.500 mm, dy=1.500 mm
Maximum value of SAR (interpolated) = 9.58 W/kg
ICOM 640QR4 460MHz FA-76UC 415MHz Body BP303N/Body - Belt Clip Touching, d=0mm, Pin=5W (ES-Probe)/Zoom Scan (5x5x7) (6x5x7)/Cube 0: Measurement grid: dx=7.5mm, dy=7.5mm, dz=5mm
Reference Value = 99.16 V/m; Power Drift = -0.26 dB
Peak SAR (extrapolated) = 11.9 W/kg
SAR(1 g) = 8.35 W/kg; SAR(10 g) = 6.16 W/kg (SAR corrected for target medium)
Maximum value of SAR (measured) = 9.35 W/kg

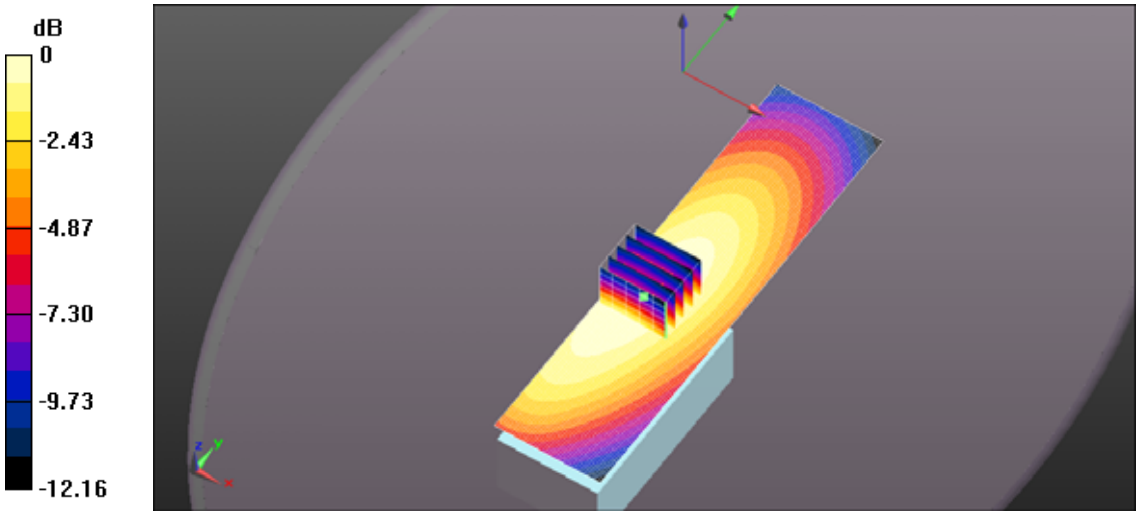

0 dB = 9.58 W/kg = 9.82 dBW/kg

File Name: 460MHz antenna FA-S76UC 432.5MHz.da52:0

DUT: DUT Sample Brick w. Antenna; Type: Sample; Serial: IMEI Number

Communication System: UID 10000, CW; Frequency: 432.5 MHz; Duty Cycle: 1:1
Medium parameters used (interpolated): f = 432.5 MHz; σ = 0.949 S/m; ε_r = 55.27; ρ = 1000 kg/m^3 ;
Phantom section: Flat Section ; Measurement Standard: DASY5 (IEEE/IEC/ANSI C63.19-2007)

DASY Configuration:

- Probe: ES3DV3 - SN3250; ConvF(7.12, 7.12, 7.12); Calibrated: 3/10/2025;
- Sensor-Surface: 3mm (Mechanical Surface Detection)
- Electronics: DAE4 Sn874; Calibrated: 7/29/2025
- Phantom: ELI 4.0; Type: QD OVA 001 BB; Serial: 1057
- DASY52 52.10.0(1446); SEMCAD X 14.6.10(7417)

ICOM 640QR4 460MHz FA-76UC 432.5MHz Body BP303N/Body - Belt Clip Touching, d=0mm, Pin=5W (ES-Probe)/Area Scan (41x161x1): Interpolated grid: dx=1.500 mm, dy=1.500 mm
Info: Interpolated medium parameters used for SAR evaluation.
Maximum value of SAR (interpolated) = 8.02 W/kg
ICOM 640QR4 460MHz FA-76UC 432.5MHz Body BP303N/Body - Belt Clip Touching, d=0mm, Pin=5W (ES-Probe)/Zoom Scan (5x5x7) (6x5x7)/Cube 0: Measurement grid: dx=7.5mm, dy=7.5mm, dz=5mm
Reference Value = 90.53 V/m; Power Drift = -0.33 dB
Peak SAR (extrapolated) = 9.87 W/kg
SAR(1 g) = 6.92 W/kg; SAR(10 g) = 5.08 W/kg (SAR corrected for target medium)
Info: Interpolated medium parameters used for SAR evaluation.
Maximum value of SAR (measured) = 7.75 W/kg

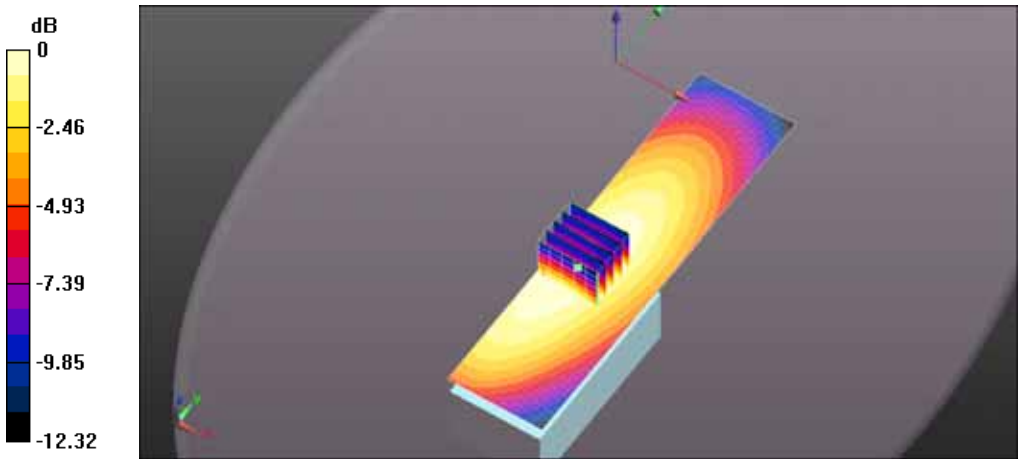

0 dB = 8.02 W/kg = 9.04 dBW/kg

File Name: 460MHz antenna FA-S76UC 450MHz.da52:0

DUT: DUT Sample Brick w. Antenna; Type: Sample; Serial: IMEI Number

Communication System: UID 10000, CW; Frequency: 450 MHz; Duty Cycle: 1:1
Medium parameters used: f = 450 MHz; σ = 0.962 S/m; ε_r = 55.014; ρ = 1000 kg/m^3 ; Phantom section: Flat Section ; Measurement Standard: DASY5 (IEEE/IEC/ANSI C63.19-2007)

DASY Configuration:

- Probe: ES3DV3 - SN3250; ConvF(7.12, 7.12, 7.12); Calibrated: 3/10/2025;
- Sensor-Surface: 3mm (Mechanical Surface Detection)
- Electronics: DAE4 Sn874; Calibrated: 7/29/2025
- Phantom: ELI 4.0; Type: QD OVA 001 BB; Serial: 1057
- DASY52 52.10.0(1446); SEMCAD X 14.6.10(7417)

ICOM 640QR4 460MHz FA-76UC 450MHz Body BP303N/Body - Belt Clip Touching, d=0mm, Pin=5W (ES-Probe)/Area Scan (41x161x1): Interpolated grid: dx=1.500 mm, dy=1.500 mm
Maximum value of SAR (interpolated) = 7.79 W/kg
ICOM 640QR4 460MHz FA-76UC 450MHz Body BP303N/Body - Belt Clip Touching, d=0mm, Pin=5W (ES-Probe)/Zoom Scan (5x5x7) (6x6x7)/Cube 0: Measurement grid: dx=7.5mm, dy=7.5mm, dz=5mm
Reference Value = 86.14 V/m; Power Drift = -0.42 dB
Peak SAR (extrapolated) = 9.57 W/kg
SAR(1 g) = 6.52 W/kg; SAR(10 g) = 4.79 W/kg (SAR corrected for target medium)
Maximum value of SAR (measured) = 7.49 W/kg

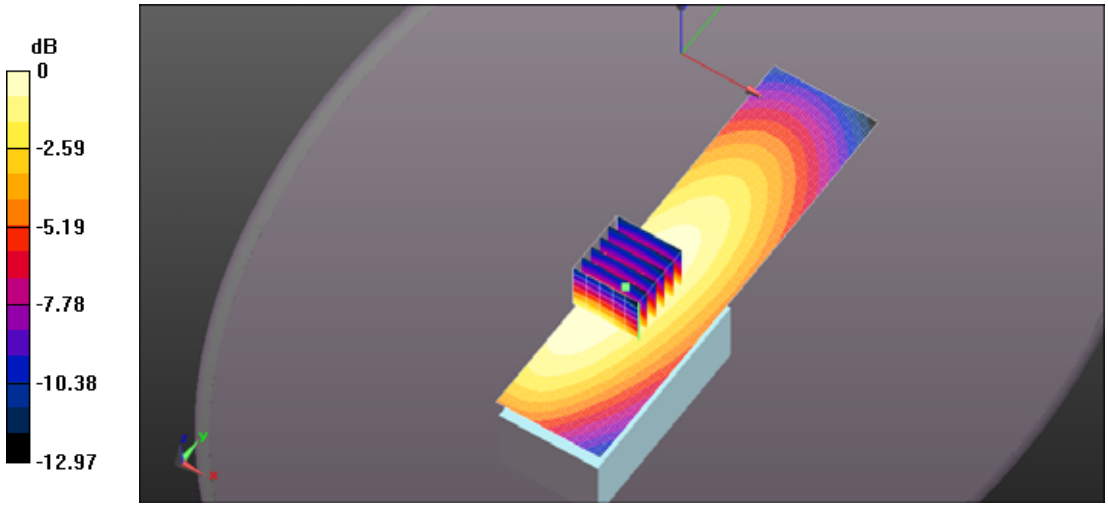

0 dB = 7.79 W/kg = 8.91 dBW/kg

File Name: 460MHz antenna FA-S76UC 485MHz.da52:0

DUT: DUT Sample Brick w. Antenna; Type: Sample; Serial: IMEI Number

Communication System: UID 10000, CW; Frequency: 485 MHz; Duty Cycle: 1:1
Medium parameters used: f = 485 MHz; σ = 1.001 S/m; ε_r = 54.553; ρ = 1000 kg/m^3 ; Phantom section: Flat Section ; Measurement Standard: DASY5 (IEEE/IEC/ANSI C63.19-2007)

DASY Configuration:

- Probe: ES3DV3 - SN3250; ConvF(7.12, 7.12, 7.12); Calibrated: 3/10/2025;
- Sensor-Surface: 3mm (Mechanical Surface Detection)
- Electronics: DAE4 Sn874; Calibrated: 7/29/2025
- Phantom: ELI 4.0; Type: QD OVA 001 BB; Serial: 1057
- DASY52 52.10.0(1446); SEMCAD X 14.6.10(7417)

ICOM 640QR4 460MHz FA-76UC 485MHz Body BP303N/Body - Belt Clip Touching, d=0mm, Pin=5W (ES-Probe)/Area Scan (41x161x1): Interpolated grid: dx=1.500 mm, dy=1.500 mm
Maximum value of SAR (interpolated) = 5.96 W/kg
ICOM 640QR4 460MHz FA-76UC 485MHz Body BP303N/Body - Belt Clip Touching, d=0mm, Pin=5W (ES-Probe)/Zoom Scan (5x5x7) (6x5x7)/Cube 0: Measurement grid: dx=7.5mm, dy=7.5mm, dz=5mm
Reference Value = 74.18 V/m; Power Drift = -0.31 dB
Peak SAR (extrapolated) = 7.44 W/kg
SAR(1 g) = 5.17 W/kg; SAR(10 g) = 3.76 W/kg (SAR corrected for target medium)
Maximum value of SAR (measured) = 5.81 W/kg

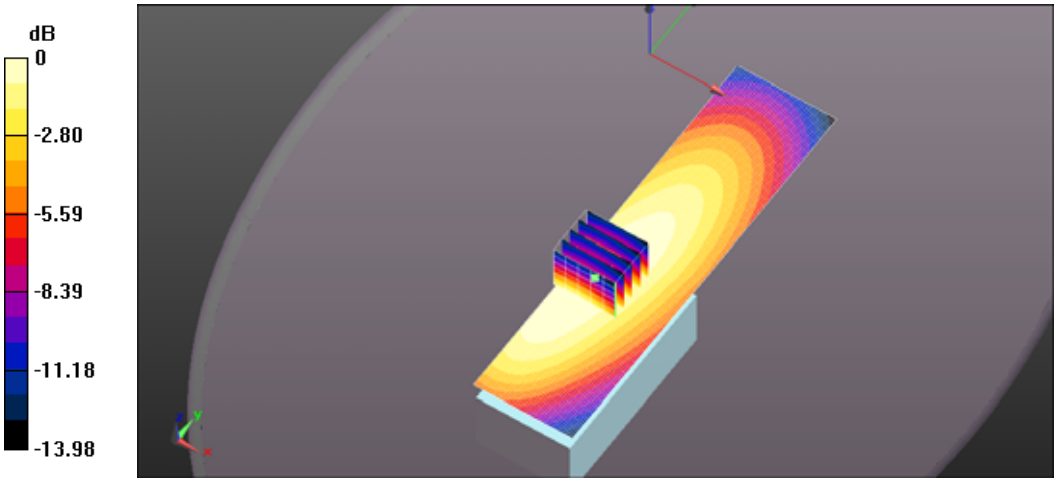

0 dB = 5.96 W/kg = 7.75 dBW/kg

File Name: 460MHz antenna FA-S76UC 520MHz.da52:0

DUT: DUT Sample Brick w. Antenna; Type: Sample; Serial: IMEI Number

Communication System: UID 10000, CW; Frequency: 520 MHz; Duty Cycle: 1:1
Medium parameters used: f = 520 MHz; σ = 1.029 S/m; ε_r = 54.048; ρ = 1000 kg/m^3 ; Phantom section: Flat Section ; Measurement Standard: DASY5 (IEEE/IEC/ANSI C63.19-2007)

DASY Configuration:

- Probe: ES3DV3 - SN3250; ConvF(7.12, 7.12, 7.12); Calibrated: 3/10/2025;
- Sensor-Surface: 3mm (Mechanical Surface Detection)
- Electronics: DAE4 Sn874; Calibrated: 7/29/2025
- Phantom: ELI 4.0; Type: QD OVA 001 BB; Serial: 1057
- DASY52 52.10.0(1446); SEMCAD X 14.6.10(7417)

ICOM 640QR4 460MHz FA-76UC 520MHz Body BP303N/Body - Belt Clip Touching, d=0mm, Pin=5W (ES-Probe)/Area Scan (51x161x1): Interpolated grid: dx=1.500 mm, dy=1.500 mm
Maximum value of SAR (interpolated) = 6.71 W/kg
ICOM 640QR4 460MHz FA-76UC 520MHz Body BP303N/Body - Belt Clip Touching, d=0mm, Pin=5W (ES-Probe)/Zoom Scan (5x5x7) (6x6x7)/Cube 0: Measurement grid: dx=7.5mm, dy=7.5mm, dz=5mm
Reference Value = 73.19 V/m; Power Drift = -0.45 dB
Peak SAR (extrapolated) = 8.01 W/kg
SAR(1 g) = 5.75 W/kg; SAR(10 g) = 4.22 W/kg (SAR corrected for target medium)
Maximum value of SAR (measured) = 6.46 W/kg

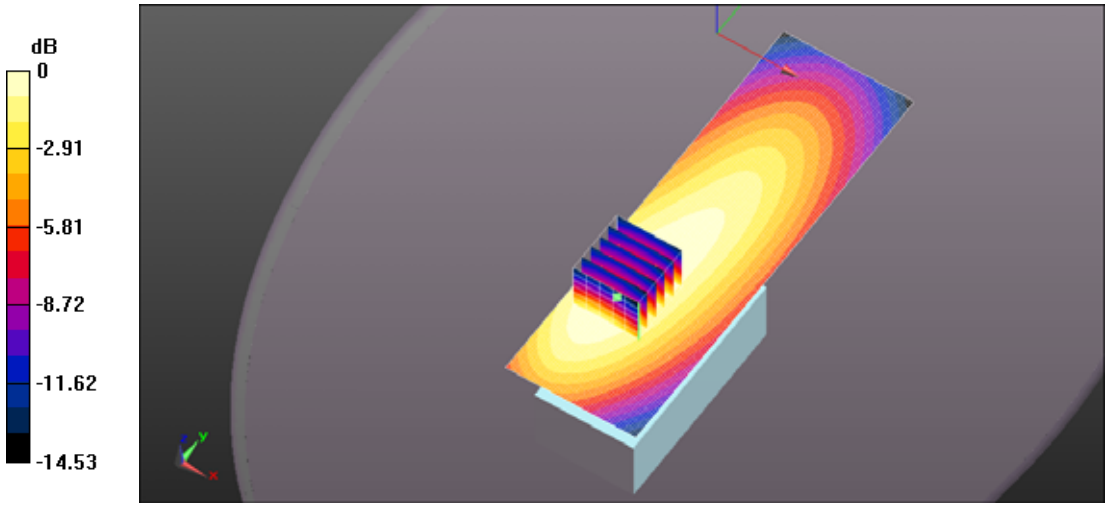

0 dB = 6.71 W/kg = 8.27 dBW/kg

File Name: 480MHz antenna FA-S76UC 400MHz.da52:0

DUT: DUT Sample Brick w. Antenna; Type: Sample; Serial: IMEI Number

Communication System: UID 10000, CW; Frequency: 400 MHz; Duty Cycle: 1:1
Medium parameters used: f = 400 MHz; σ = 0.875 S/m; ε_r = 56.091; ρ = 1000 kg/m^3 ; Phantom section: Flat Section ; Measurement Standard: DASY5 (IEEE/IEC/ANSI C63.19-2007)

DASY Configuration:

- Probe: ES3DV3 - SN3250; ConvF(7.12, 7.12, 7.12); Calibrated: 3/10/2025;
- Sensor-Surface: 3mm (Mechanical Surface Detection)
- Electronics: DAE4 Sn874; Calibrated: 7/29/2025
- Phantom: ELI 4.0; Type: QD OVA 001 BB; Serial: 1057
- DASY52 52.10.0(1446); SEMCAD X 14.6.10(7417)

ICOM 640QR4 480MHz FA-76UC 400MHz Body BP303N/Body - Belt Clip Touching, d=0mm, Pin=5W (ES-Probe)/Area Scan (41x161x1): Interpolated grid: dx=1.500 mm, dy=1.500 mm
Maximum value of SAR (interpolated) = 8.39 W/kg
ICOM 640QR4 480MHz FA-76UC 400MHz Body BP303N/Body - Belt Clip Touching, d=0mm, Pin=5W (ES-Probe)/Zoom Scan (5x5x7) (6x5x7)/Cube 0: Measurement grid: dx=7.5mm, dy=7.5mm, dz=5mm
Reference Value = 93.94 V/m; Power Drift = -0.19 dB
Peak SAR (extrapolated) = 10.4 W/kg
SAR(1 g) = 7.3 W/kg; SAR(10 g) = 5.41 W/kg (SAR corrected for target medium)
Maximum value of SAR (measured) = 8.18 W/kg

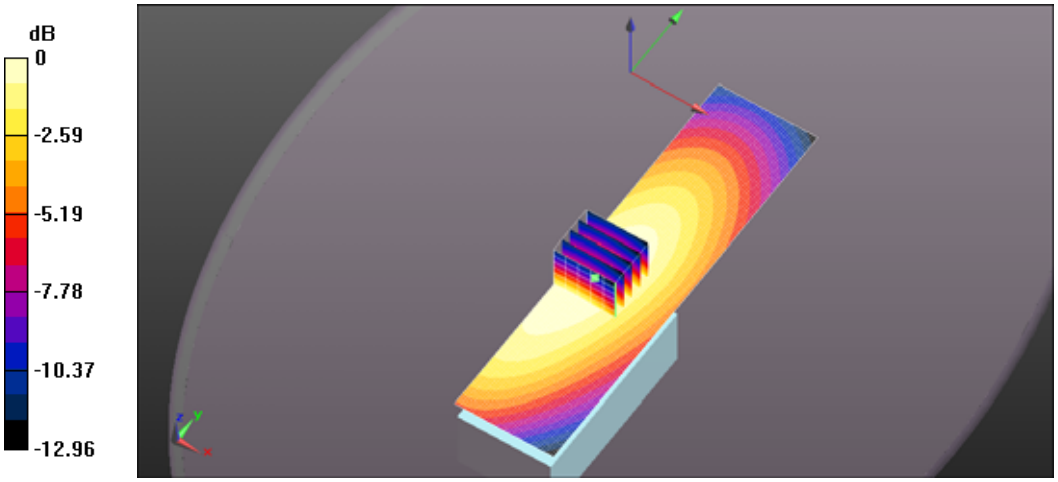

0 dB = 8.39 W/kg = 9.24 dBW/kg

File Name: 480MHz antenna FA-S76UC 415MHz.da52:0

DUT: DUT Sample Brick w. Antenna; Type: Sample; Serial: IMEI Number

Communication System: UID 10000, CW; Frequency: 415 MHz; Duty Cycle: 1:1
Medium parameters used: f = 415 MHz; σ = 0.89 S/m; ε_r = 55.964; ρ = 1000 kg/m^3 ; Phantom section: Flat Section ; Measurement Standard: DASY5 (IEEE/IEC/ANSI C63.19-2007)

DASY Configuration:

- Probe: ES3DV3 - SN3250; ConvF(7.12, 7.12, 7.12); Calibrated: 3/10/2025;
- Sensor-Surface: 3mm (Mechanical Surface Detection)
- Electronics: DAE4 Sn874; Calibrated: 7/29/2025
- Phantom: ELI 4.0; Type: QD OVA 001 BB; Serial: 1057
- DASY52 52.10.0(1446); SEMCAD X 14.6.10(7417)

ICOM 640QR4 480MHz FA-76UC 415MHz Body BP303N/Body - Belt Clip Touching, d=0mm, Pin=5W (ES-Probe)/Area Scan (41x161x1): Interpolated grid: dx=1.500 mm, dy=1.500 mm
Maximum value of SAR (interpolated) = 8.14 W/kg
ICOM 640QR4 480MHz FA-76UC 415MHz Body BP303N/Body - Belt Clip Touching, d=0mm, Pin=5W (ES-Probe)/Zoom Scan (5x5x7) (6x5x7)/Cube 0: Measurement grid: dx=7.5mm, dy=7.5mm, dz=5mm
Reference Value = 89.01 V/m; Power Drift = -0.37 dB
Peak SAR (extrapolated) = 9.98 W/kg
SAR(1 g) = 7 W/kg; SAR(10 g) = 5.17 W/kg (SAR corrected for target medium)
Maximum value of SAR (measured) = 7.85 W/kg

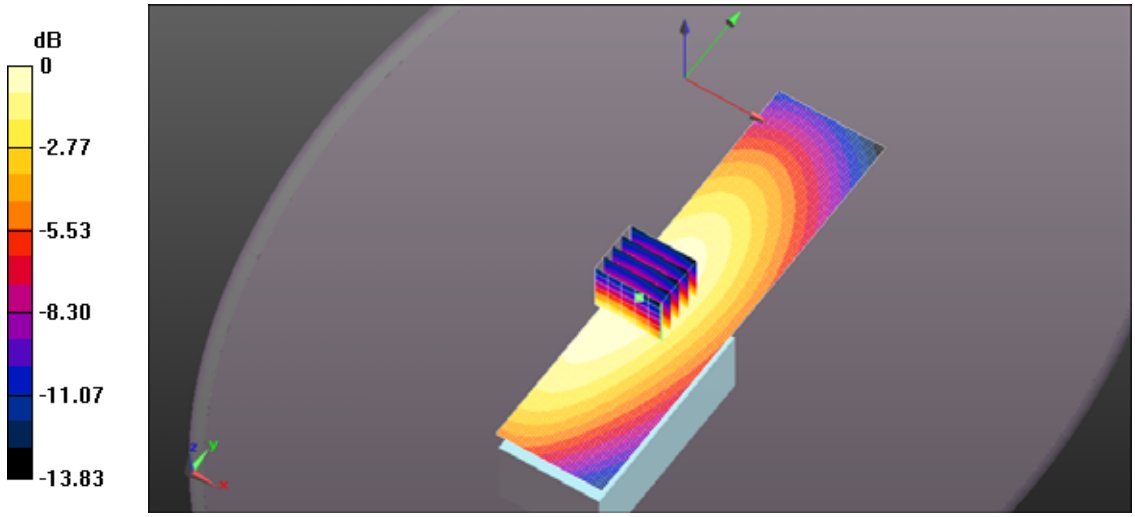

0 dB = 8.14 W/kg = 9.11 dBW/kg

File Name: 480MHz antenna FA-S76UC 432.5MHz.da52:0

DUT: DUT Sample Brick w. Antenna; Type: Sample; Serial: IMEI Number

Communication System: UID 10000, CW; Frequency: 432.5 MHz; Duty Cycle: 1:1
Medium parameters used (interpolated): f = 432.5 MHz; σ = 0.904 S/m; ε_r = 55.754; ρ = 1000 kg/m^3 ;
Phantom section: Flat Section ; Measurement Standard: DASY5 (IEEE/IEC/ANSI C63.19-2007)

DASY Configuration:

- Probe: ES3DV3 - SN3250; ConvF(7.12, 7.12, 7.12); Calibrated: 3/10/2025;
- Sensor-Surface: 3mm (Mechanical Surface Detection)
- Electronics: DAE4 Sn874; Calibrated: 7/29/2025
- Phantom: ELI 4.0; Type: QD OVA 001 BB; Serial: 1057
- DASY52 52.10.0(1446); SEMCAD X 14.6.10(7417)

ICOM 640QR4 480MHz FA-76UC 432.5MHz Body BP303N/Body - Belt Clip Touching, d=0mm, Pin=5W (ES-Probe)/Area Scan (41x161x1): Interpolated grid: dx=1.500 mm, dy=1.500 mm
Info: Interpolated medium parameters used for SAR evaluation.
Maximum value of SAR (interpolated) = 7.54 W/kg
ICOM 640QR4 480MHz FA-76UC 432.5MHz Body BP303N/Body - Belt Clip Touching, d=0mm, Pin=5W (ES-Probe)/Zoom Scan (5x5x7) (7x6x7)/Cube 0: Measurement grid: dx=7.5mm, dy=7.5mm, dz=5mm
Reference Value = 88.14 V/m; Power Drift = -0.41 dB
Peak SAR (extrapolated) = 9.21 W/kg
SAR(1 g) = 6.47 W/kg; SAR(10 g) = 4.77 W/kg (SAR corrected for target medium)
Info: Interpolated medium parameters used for SAR evaluation.
Maximum value of SAR (measured) = 7.24 W/kg

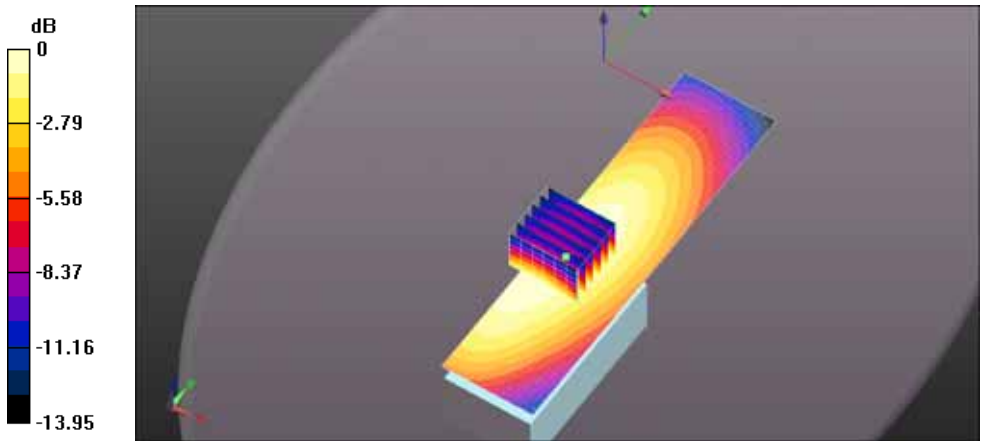

0 dB = 7.54 W/kg = 8.78 dBW/kg

File Name: 480MHz antenna FA-S76UC 467.5MHz.da52:0

DUT: DUT Sample Brick w. Antenna; Type: Sample; Serial: IMEI Number

Communication System: UID 10000, CW; Frequency: 467.5 MHz; Duty Cycle: 1:1
Medium parameters used (interpolated): f = 467.5 MHz; σ = 0.936 S/m; ε_r = 55.091; ρ = 1000 kg/m^3 ;
Phantom section: Flat Section ; Measurement Standard: DASY5 (IEEE/IEC/ANSI C63.19-2007)

DASY Configuration:

- Probe: ES3DV3 - SN3250; ConvF(7.12, 7.12, 7.12); Calibrated: 3/10/2025;
- Sensor-Surface: 3mm (Mechanical Surface Detection)
- Electronics: DAE4 Sn874; Calibrated: 7/29/2025
- Phantom: ELI 4.0; Type: QD OVA 001 BB; Serial: 1057
- DASY52 52.10.0(1446); SEMCAD X 14.6.10(7417)

ICOM 640QR4 480MHz FA-76UC 467.5MHz Body BP303N/Body - Belt Clip Touching, d=0mm, Pin=5W (ES-Probe)/Area Scan (41x161x1): Interpolated grid: dx=1.500 mm, dy=1.500 mm
Info: Interpolated medium parameters used for SAR evaluation.
Maximum value of SAR (interpolated) = 5.95 W/kg
ICOM 640QR4 480MHz FA-76UC 467.5MHz Body BP303N/Body - Belt Clip Touching, d=0mm, Pin=5W (ES-Probe)/Zoom Scan (5x5x7) (6x6x7)/Cube 0: Measurement grid: dx=7.5mm, dy=7.5mm, dz=5mm
Reference Value = 74.73 V/m; Power Drift = -0.59 dB
Peak SAR (extrapolated) = 7.14 W/kg
SAR(1 g) = 5 W/kg; SAR(10 g) = 3.65 W/kg (SAR corrected for target medium)
Info: Interpolated medium parameters used for SAR evaluation.
Maximum value of SAR (measured) = 5.62 W/kg

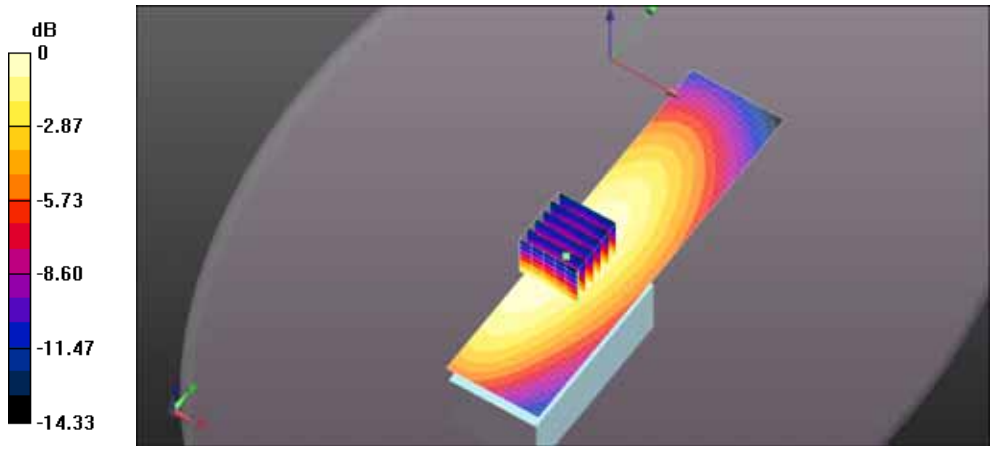

0 dB = 5.95 W/kg = 7.74 dBW/kg

File Name: 480MHz antenna FA-S76UC 502.5MHz.da52:0

DUT: DUT Sample Brick w. Antenna; Type: Sample; Serial: IMEI Number

Communication System: UID 10000, CW; Frequency: 502.5 MHz; Duty Cycle: 1:1
Medium parameters used (interpolated): f = 502.5 MHz; σ = 0.966 S/m; ε_r = 54.246; ρ = 1000 kg/m^3 ;
Phantom section: Flat Section ; Measurement Standard: DASY5 (IEEE/IEC/ANSI C63.19-2007)

DASY Configuration:

- Probe: ES3DV3 - SN3250; ConvF(7.12, 7.12, 7.12); Calibrated: 3/10/2025;
- Sensor-Surface: 3mm (Mechanical Surface Detection)
- Electronics: DAE4 Sn874; Calibrated: 7/29/2025
- Phantom: ELI 4.0; Type: QD OVA 001 BB; Serial: 1057
- DASY52 52.10.0(1446); SEMCAD X 14.6.10(7417)

ICOM 640QR4 480MHz FA-76UC 502.5MHz Body BP303N/Body - Belt Clip Touching, d=0mm, Pin=5W (ES-Probe)/Area Scan (51x161x1): Interpolated grid: dx=1.500 mm, dy=1.500 mm
Info: Interpolated medium parameters used for SAR evaluation.
Maximum value of SAR (interpolated) = 6.59 W/kg
ICOM 640QR4 480MHz FA-76UC 502.5MHz Body BP303N/Body - Belt Clip Touching, d=0mm, Pin=5W (ES-Probe)/Zoom Scan (5x5x7) (6x5x7)/Cube 0: Measurement grid: dx=7.5mm, dy=7.5mm, dz=5mm
Reference Value = 72.87 V/m; Power Drift = 0.04 dB
Peak SAR (extrapolated) = 8.27 W/kg
SAR(1 g) = 5.76 W/kg; SAR(10 g) = 4.19 W/kg (SAR corrected for target medium)
Info: Interpolated medium parameters used for SAR evaluation.
Maximum value of SAR (measured) = 6.49 W/kg

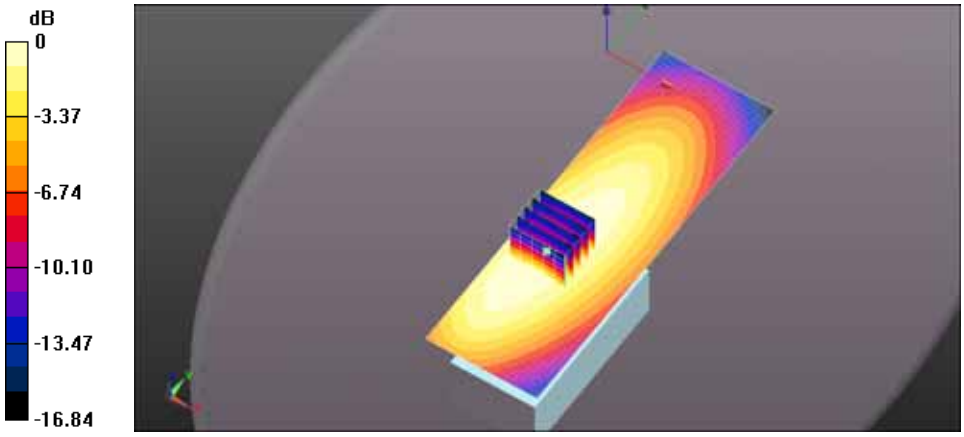

0 dB = 6.59 W/kg = 8.19 dBW/kg

File Name: 500MHz antenna FA-S76UC 400MHz.da52:0

DUT: DUT Sample Brick w. Antenna; Type: Sample; Serial: IMEI Number

Communication System: UID 10000, CW; Frequency: 400 MHz; Duty Cycle: 1:1
Medium parameters used: f = 400 MHz; σ = 0.875 S/m; ε_r = 56.091; ρ = 1000 kg/m^3 ; Phantom section: Flat Section ; Measurement Standard: DASY5 (IEEE/IEC/ANSI C63.19-2007)

DASY Configuration:

- Probe: ES3DV3 - SN3250; ConvF(7.12, 7.12, 7.12); Calibrated: 3/10/2025;
- Sensor-Surface: 3mm (Mechanical Surface Detection)
- Electronics: DAE4 Sn874; Calibrated: 7/29/2025
- Phantom: ELI 4.0; Type: QD OVA 001 BB; Serial: 1057
- DASY52 52.10.0(1446); SEMCAD X 14.6.10(7417)

ICOM 640QR4 500MHz FA-76UC 400MHz Body BP303N/Body - Belt Clip Touching, d=0mm, Pin=5W (ES-Probe)/Area Scan (41x161x1): Interpolated grid: dx=1.500 mm, dy=1.500 mm
Maximum value of SAR (interpolated) = 7.09 W/kg
ICOM 640QR4 500MHz FA-76UC 400MHz Body BP303N/Body - Belt Clip Touching, d=0mm, Pin=5W (ES-Probe)/Zoom Scan (5x5x7) (6x6x7)/Cube 0: Measurement grid: dx=7.5mm, dy=7.5mm, dz=5mm
Reference Value = 85.05 V/m; Power Drift = -0.15 dB
Peak SAR (extrapolated) = 8.83 W/kg
SAR(1 g) = 6.17 W/kg; SAR(10 g) = 4.54 W/kg (SAR corrected for target medium)
Maximum value of SAR (measured) = 6.91 W/kg

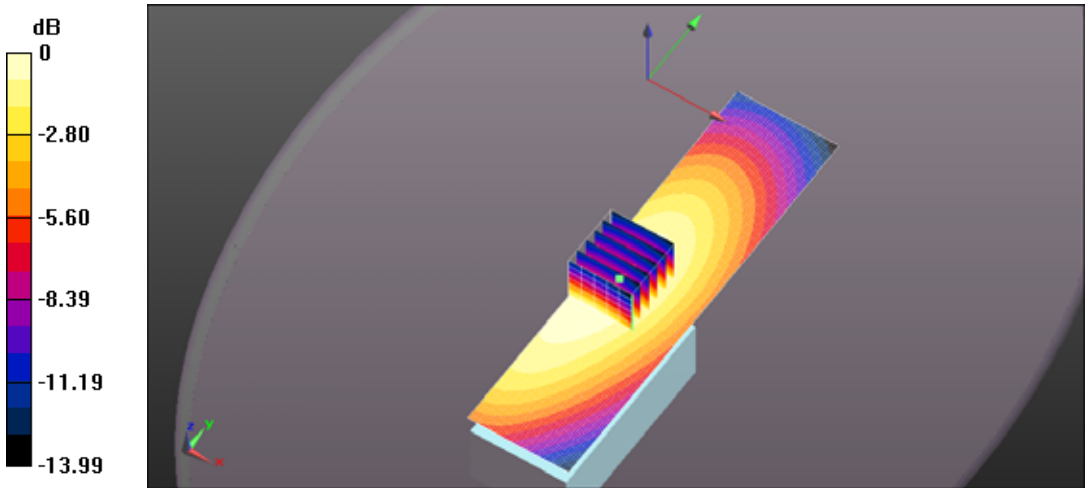

0 dB = 7.09 W/kg = 8.51 dBW/kg

File Name: 500MHz antenna FA-S76UC 432.5MHz.da52:0

DUT: DUT Sample Brick w. Antenna; Type: Sample; Serial: IMEI Number

Communication System: UID 10000, CW; Frequency: 432.5 MHz; Duty Cycle: 1:1
Medium parameters used (interpolated): f = 432.5 MHz; σ = 0.904 S/m; ε_r = 55.754; ρ = 1000 kg/m^3 ;
Phantom section: Flat Section ; Measurement Standard: DASY5 (IEEE/IEC/ANSI C63.19-2007)

DASY Configuration:

- Probe: ES3DV3 - SN3250; ConvF(7.12, 7.12, 7.12); Calibrated: 3/10/2025;
- Sensor-Surface: 3mm (Mechanical Surface Detection)
- Electronics: DAE4 Sn874; Calibrated: 7/29/2025
- Phantom: ELI 4.0; Type: QD OVA 001 BB; Serial: 1057
- DASY52 52.10.0(1446); SEMCAD X 14.6.10(7417)

ICOM 640QR4 500MHz FA-76UC 432.5MHz Body BP303N/Body - Belt Clip Touching, d=0mm, Pin=5W (ES-Probe)/Area Scan (41x161x1): Interpolated grid: dx=1.500 mm, dy=1.500 mm
Info: Interpolated medium parameters used for SAR evaluation.
Maximum value of SAR (interpolated) = 6.58 W/kg
ICOM 640QR4 500MHz FA-76UC 432.5MHz Body BP303N/Body - Belt Clip Touching, d=0mm, Pin=5W (ES-Probe)/Zoom Scan (5x5x7) (6x5x7)/Cube 0: Measurement grid: dx=7.5mm, dy=7.5mm, dz=5mm
Reference Value = 80.74 V/m; Power Drift = -0.42 dB
Peak SAR (extrapolated) = 7.92 W/kg
SAR(1 g) = 5.55 W/kg; SAR(10 g) = 4.07 W/kg (SAR corrected for target medium)
Info: Interpolated medium parameters used for SAR evaluation.
Maximum value of SAR (measured) = 6.22 W/kg

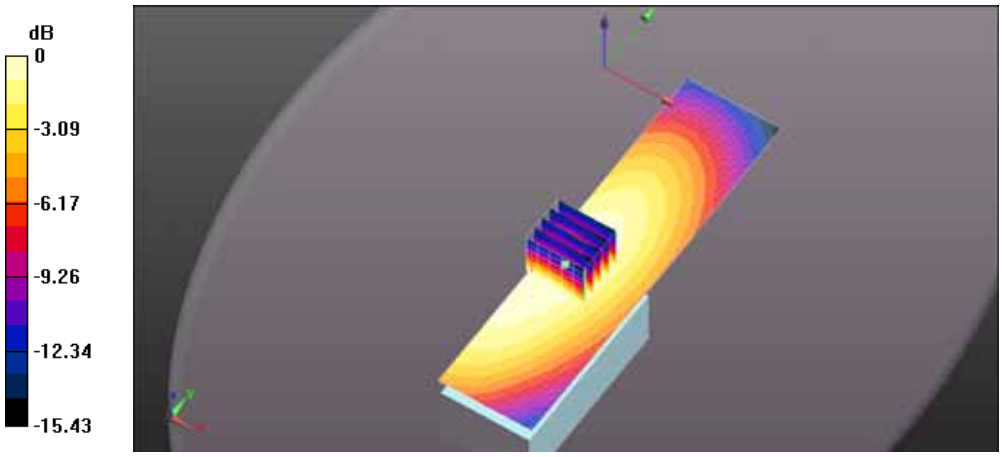

0 dB = 6.58 W/kg = 8.18 dBW/kg

File Name: 500MHz antenna FA-S76UC 467.5MHz.da52:0

DUT: DUT Sample Brick w. Antenna; Type: Sample; Serial: IMEI Number

Communication System: UID 10000, CW; Frequency: 467.5 MHz; Duty Cycle: 1:1
Medium parameters used (interpolated): f = 467.5 MHz; σ = 0.936 S/m; ε_r = 55.091; ρ = 1000 kg/m^3 ;
Phantom section: Flat Section ; Measurement Standard: DASY5 (IEEE/IEC/ANSI C63.19-2007)

DASY Configuration:

- Probe: ES3DV3 - SN3250; ConvF(7.12, 7.12, 7.12); Calibrated: 3/10/2025;
- Sensor-Surface: 3mm (Mechanical Surface Detection)
- Electronics: DAE4 Sn874; Calibrated: 7/29/2025
- Phantom: ELI 4.0; Type: QD OVA 001 BB; Serial: 1057
- DASY52 52.10.0(1446); SEMCAD X 14.6.10(7417)

ICOM 640QR4 500MHz FA-76UC 467.5MHz Body BP303N/Body - Belt Clip Touching, d=0mm, Pin=5W (ES-Probe)/Area Scan (41x161x1): Interpolated grid: dx=1.500 mm, dy=1.500 mm
Info: Interpolated medium parameters used for SAR evaluation.
Maximum value of SAR (interpolated) = 5.23 W/kg
ICOM 640QR4 500MHz FA-76UC 467.5MHz Body BP303N/Body - Belt Clip Touching, d=0mm, Pin=5W (ES-Probe)/Zoom Scan (5x5x7) (6x6x7)/Cube 0: Measurement grid: dx=7.5mm, dy=7.5mm, dz=5mm
Reference Value = 69.57 V/m; Power Drift = -0.11 dB
Peak SAR (extrapolated) = 6.59 W/kg
SAR(1 g) = 4.59 W/kg; SAR(10 g) = 3.34 W/kg (SAR corrected for target medium)
Info: Interpolated medium parameters used for SAR evaluation.
Maximum value of SAR (measured) = 5.17 W/kg

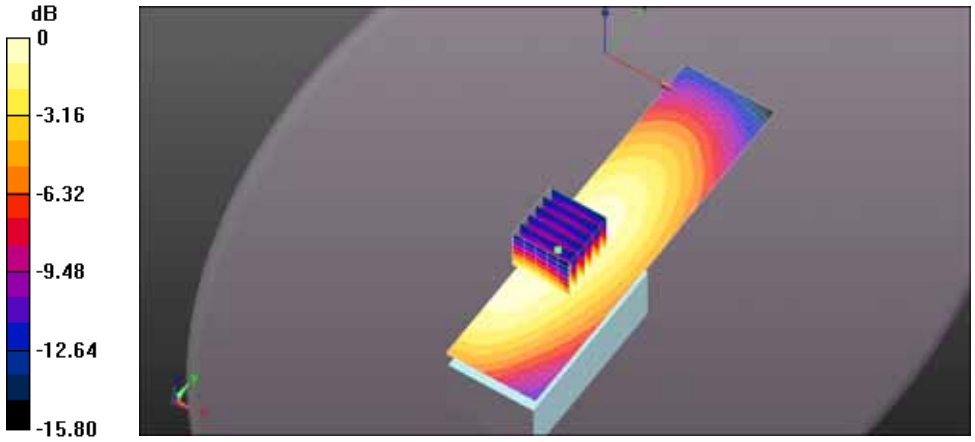

0 dB = 5.23 W/kg = 7.19 dBW/kg

File Name: 500MHz antenna FA-S76UC 502.5MHz.da52:0

DUT: DUT Sample Brick w. Antenna; Type: Sample; Serial: IMEI Number

Communication System: UID 10000, CW; Frequency: 502.5 MHz; Duty Cycle: 1:1
Medium parameters used (interpolated): f = 502.5 MHz; σ = 0.966 S/m; ε_r = 54.246; ρ = 1000 kg/m^3 ;
Phantom section: Flat Section ; Measurement Standard: DASY5 (IEEE/IEC/ANSI C63.19-2007)

DASY Configuration:

- Probe: ES3DV3 - SN3250; ConvF(7.12, 7.12, 7.12); Calibrated: 3/10/2025;
- Sensor-Surface: 3mm (Mechanical Surface Detection)
- Electronics: DAE4 Sn874; Calibrated: 7/29/2025
- Phantom: ELI 4.0; Type: QD OVA 001 BB; Serial: 1057
- DASY52 52.10.0(1446); SEMCAD X 14.6.10(7417)

ICOM 640QR4 500MHz FA-76UC 502.5MHz Body BP303N/Body - Belt Clip Touching, d=0mm, Pin=5W (ES-Probe)/Area Scan (41x161x1): Interpolated grid: dx=1.500 mm, dy=1.500 mm
Info: Interpolated medium parameters used for SAR evaluation.
Maximum value of SAR (interpolated) = 8.07 W/kg
ICOM 640QR4 500MHz FA-76UC 502.5MHz Body BP303N/Body - Belt Clip Touching, d=0mm, Pin=5W (ES-Probe)/Zoom Scan (5x5x7) (7x7x7)/Cube 0: Measurement grid: dx=7.5mm, dy=7.5mm, dz=5mm
Reference Value = 85.07 V/m; Power Drift = -0.18 dB
Peak SAR (extrapolated) = 10.2 W/kg
SAR(1 g) = 7.05 W/kg; SAR(10 g) = 5.11 W/kg (SAR corrected for target medium)
Info: Interpolated medium parameters used for SAR evaluation.
Maximum value of SAR (measured) = 7.92 W/kg

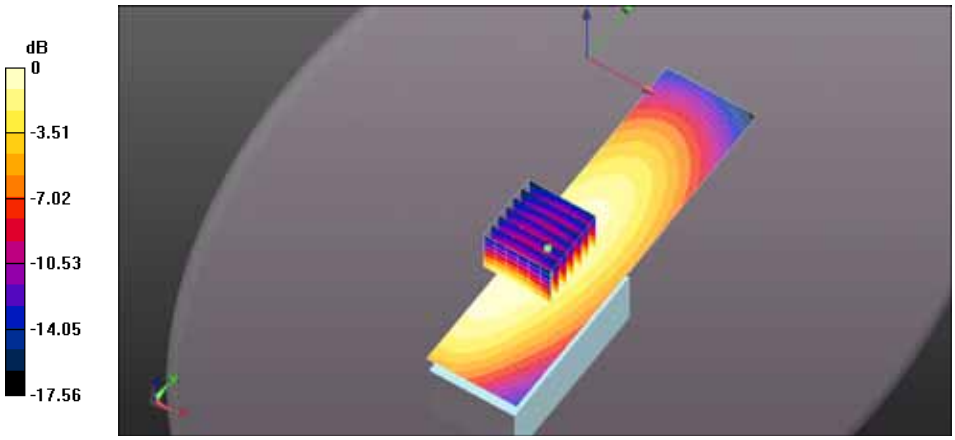

0 dB = 8.07 W/kg = 9.07 dBW/kg

File Name: 520MHz antenna FA-S76UC 400MHz.da52:0

DUT: DUT Sample Brick w. Antenna; Type: Sample; Serial: IMEI Number

Communication System: UID 10000, CW; Frequency: 400 MHz; Duty Cycle: 1:1
Medium parameters used: f = 400 MHz; σ = 0.875 S/m; ε_r = 56.091; ρ = 1000 kg/m^3 ; Phantom section: Flat Section ; Measurement Standard: DASY5 (IEEE/IEC/ANSI C63.19-2007)

DASY Configuration:

- Probe: ES3DV3 - SN3250; ConvF(7.12, 7.12, 7.12); Calibrated: 3/10/2025;
- Sensor-Surface: 3mm (Mechanical Surface Detection)
- Electronics: DAE4 Sn874; Calibrated: 7/29/2025
- Phantom: ELI 4.0; Type: QD OVA 001 BB; Serial: 1057
- DASY52 52.10.0(1446); SEMCAD X 14.6.10(7417)

ICOM 640QR4 520MHz FA-76UC 400MHz Body BP303N/Body - Belt Clip Touching, d=0mm, Pin=5W (ES-Probe)/Area Scan (41x161x1): Interpolated grid: dx=1.500 mm, dy=1.500 mm
Maximum value of SAR (interpolated) = 5.72 W/kg
ICOM 640QR4 520MHz FA-76UC 400MHz Body BP303N/Body - Belt Clip Touching, d=0mm, Pin=5W (ES-Probe)/Zoom Scan (5x5x7) (6x5x7)/Cube 0: Measurement grid: dx=7.5mm, dy=7.5mm, dz=5mm
Reference Value = 77.72 V/m; Power Drift = -0.16 dB
Peak SAR (extrapolated) = 7.14 W/kg
SAR(1 g) = 5.01 W/kg; SAR(10 g) = 3.7 W/kg (SAR corrected for target medium)
Maximum value of SAR (measured) = 5.62 W/kg

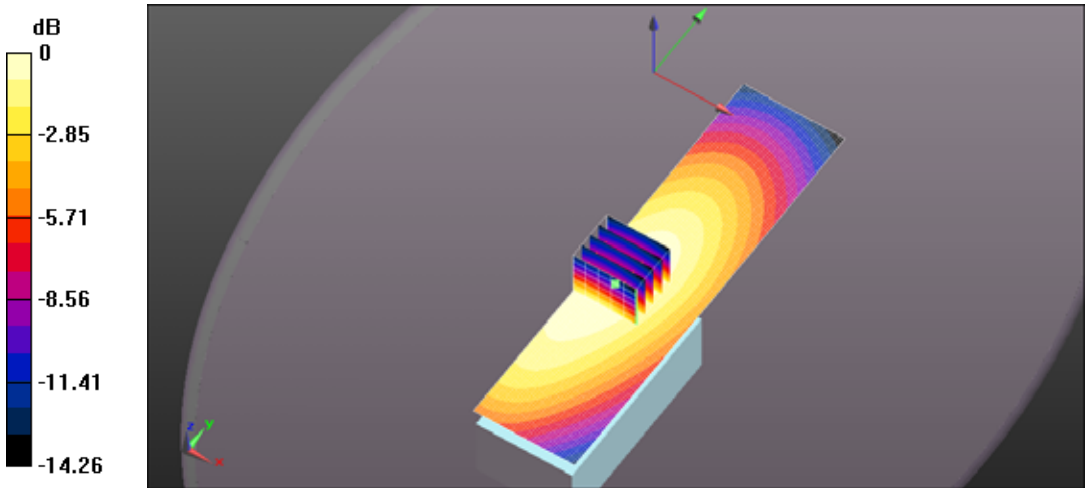

0 dB = 5.72 W/kg = 7.57 dBW/kg

File Name: 520MHz antenna FA-S76UC 432.5MHz.da52:0

DUT: DUT Sample Brick w. Antenna; Type: Sample; Serial: IMEI Number

Communication System: UID 10000, CW; Frequency: 432.5 MHz; Duty Cycle: 1:1
Medium parameters used (interpolated): f = 432.5 MHz; σ = 0.904 S/m; ε_r = 55.754; ρ = 1000 kg/m^3 ;
Phantom section: Flat Section ; Measurement Standard: DASY5 (IEEE/IEC/ANSI C63.19-2007)

DASY Configuration:

- Probe: ES3DV3 - SN3250; ConvF(7.12, 7.12, 7.12); Calibrated: 3/10/2025;
- Sensor-Surface: 3mm (Mechanical Surface Detection)
- Electronics: DAE4 Sn874; Calibrated: 7/29/2025
- Phantom: ELI 4.0; Type: QD OVA 001 BB; Serial: 1057
- DASY52 52.10.0(1446); SEMCAD X 14.6.10(7417)

ICOM 640QR4 520MHz FA-76UC 432.5MHz Body BP303N/Body - Belt Clip Touching, d=0mm, Pin=5W (ES-Probe)/Area Scan (41x161x1): Interpolated grid: dx=1.500 mm, dy=1.500 mm
Info: Interpolated medium parameters used for SAR evaluation.
Maximum value of SAR (interpolated) = 6.03 W/kg
ICOM 640QR4 520MHz FA-76UC 432.5MHz Body BP303N/Body - Belt Clip Touching, d=0mm, Pin=5W (ES-Probe)/Zoom Scan (5x5x7) (6x6x7)/Cube 0: Measurement grid: dx=7.5mm, dy=7.5mm, dz=5mm
Reference Value = 77.95 V/m; Power Drift = -0.47 dB
Peak SAR (extrapolated) = 7.28 W/kg
SAR(1 g) = 5.14 W/kg; SAR(10 g) = 3.78 W/kg (SAR corrected for target medium)
Info: Interpolated medium parameters used for SAR evaluation.
Maximum value of SAR (measured) = 5.76 W/kg

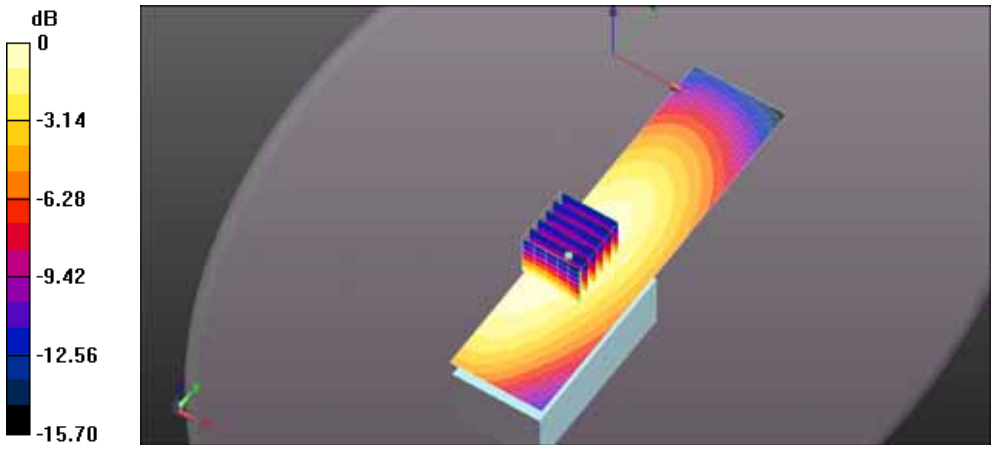

0 dB = 6.03 W/kg = 7.81 dBW/kg

File Name: 520MHz antenna FA-S76UC 467.5MHz.da52:0

DUT: DUT Sample Brick w. Antenna; Type: Sample; Serial: IMEI Number

Communication System: UID 10000, CW; Frequency: 467.5 MHz; Duty Cycle: 1:1
Medium parameters used (interpolated): f = 467.5 MHz; σ = 0.936 S/m; ε_r = 55.091; ρ = 1000 kg/m^3 ;
Phantom section: Flat Section ; Measurement Standard: DASY5 (IEEE/IEC/ANSI C63.19-2007)

DASY Configuration:

- Probe: ES3DV3 - SN3250; ConvF(7.12, 7.12, 7.12); Calibrated: 3/10/2025;
- Sensor-Surface: 3mm (Mechanical Surface Detection)
- Electronics: DAE4 Sn874; Calibrated: 7/29/2025
- Phantom: ELI 4.0; Type: QD OVA 001 BB; Serial: 1057
- DASY52 52.10.0(1446); SEMCAD X 14.6.10(7417)

ICOM 640QR4 520MHz FA-76UC 467.5MHz Body BP303N/Body - Belt Clip Touching, d=0mm, Pin=5W (ES-Probe)/Area Scan (41x161x1): Interpolated grid: dx=1.500 mm, dy=1.500 mm
Info: Interpolated medium parameters used for SAR evaluation.
Maximum value of SAR (interpolated) = 4.26 W/kg
ICOM 640QR4 520MHz FA-76UC 467.5MHz Body BP303N/Body - Belt Clip Touching, d=0mm, Pin=5W (ES-Probe)/Zoom Scan (5x5x7) (7x6x7)/Cube 0: Measurement grid: dx=7.5mm, dy=7.5mm, dz=5mm
Reference Value = 64.16 V/m; Power Drift = -0.38 dB
Peak SAR (extrapolated) = 5.40 W/kg
SAR(1 g) = 3.71 W/kg; SAR(10 g) = 2.7 W/kg (SAR corrected for target medium)
Info: Interpolated medium parameters used for SAR evaluation.
Maximum value of SAR (measured) = 4.19 W/kg

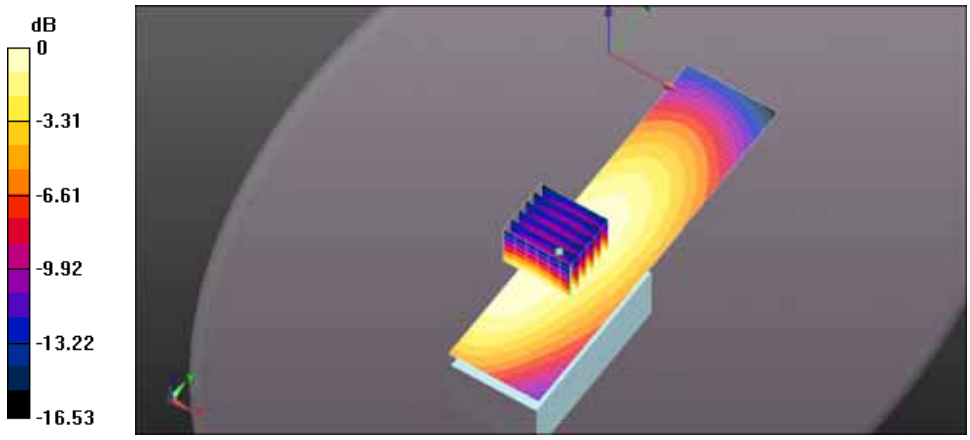

0 dB = 4.26 W/kg = 6.30 dBW/kg

File Name: 520MHz antenna FA-S76UC 485MHz.da52:0

DUT: DUT Sample Brick w. Antenna; Type: Sample; Serial: IMEI Number

Communication System: UID 10000, CW; Frequency: 485 MHz; Duty Cycle: 1:1
Medium parameters used: f = 485 MHz; σ = 0.953 S/m; ε_r = 54.645; ρ = 1000 kg/m^3 ; Phantom section: Flat Section ; Measurement Standard: DASY5 (IEEE/IEC/ANSI C63.19-2007)

DASY Configuration:

- Probe: ES3DV3 - SN3250; ConvF(7.12, 7.12, 7.12); Calibrated: 3/10/2025;
- Sensor-Surface: 3mm (Mechanical Surface Detection)
- Electronics: DAE4 Sn874; Calibrated: 7/29/2025
- Phantom: ELI 4.0; Type: QD OVA 001 BB; Serial: 1057
- DASY52 52.10.0(1446); SEMCAD X 14.6.10(7417)

ICOM 640QR4 520MHz FA-76UC 485MHz Body BP303N/Body - Belt Clip Touching, d=0mm, Pin=5W (ES-Probe)/Area Scan (41x161x1): Interpolated grid: dx=1.500 mm, dy=1.500 mm
Maximum value of SAR (interpolated) = 7.25 W/kg
ICOM 640QR4 520MHz FA-76UC 485MHz Body BP303N/Body - Belt Clip Touching, d=0mm, Pin=5W (ES-Probe)/Zoom Scan (5x5x7) (6x6x7)/Cube 0: Measurement grid: dx=7.5mm, dy=7.5mm, dz=5mm
Reference Value = 82.02 V/m; Power Drift = -0.21 dB
Peak SAR (extrapolated) = 8.96 W/kg
SAR(1 g) = 6.24 W/kg; SAR(10 g) = 4.54 W/kg (SAR corrected for target medium)
Maximum value of SAR (measured) = 7.02 W/kg

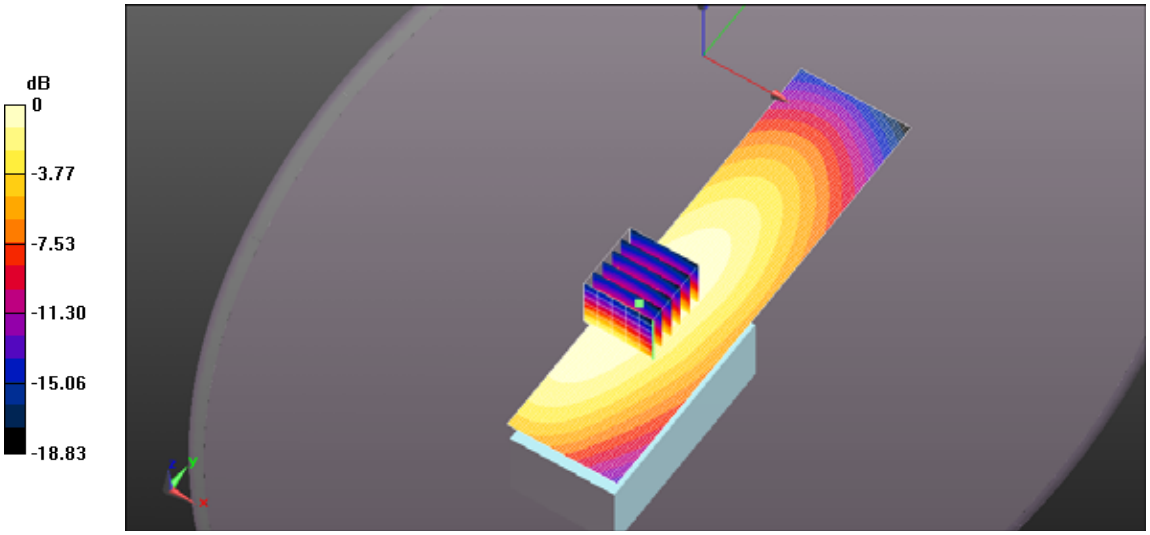

0 dB = 7.25 W/kg = 8.60 dBW/kg

File Name: 520MHz antenna FA-S76UC 502.5MHz.da52:0

DUT: DUT Sample Brick w. Antenna; Type: Sample; Serial: IMEI Number

Communication System: UID 10000, CW; Frequency: 502.5 MHz; Duty Cycle: 1:1
Medium parameters used (interpolated): f = 502.5 MHz; σ = 0.966 S/m; ε_r = 54.246; ρ = 1000 kg/m^3 ;
Phantom section: Flat Section ; Measurement Standard: DASY5 (IEEE/IEC/ANSI C63.19-2007)

DASY Configuration:

- Probe: ES3DV3 - SN3250; ConvF(7.12, 7.12, 7.12); Calibrated: 3/10/2025;
- Sensor-Surface: 3mm (Mechanical Surface Detection)
- Electronics: DAE4 Sn874; Calibrated: 7/29/2025
- Phantom: ELI 4.0; Type: QD OVA 001 BB; Serial: 1057
- DASY52 52.10.0(1446); SEMCAD X 14.6.10(7417)

ICOM 640QR4 520MHz FA-76UC 402.5MHz Body BP303N/Body - Belt Clip Touching, d=0mm, Pin=5W (ES-Probe)/Area Scan (41x161x1): Interpolated grid: dx=1.500 mm, dy=1.500 mm
Info: Interpolated medium parameters used for SAR evaluation.
Maximum value of SAR (interpolated) = 9.36 W/kg
ICOM 640QR4 520MHz FA-76UC 402.5MHz Body BP303N/Body - Belt Clip Touching, d=0mm, Pin=5W (ES-Probe)/Zoom Scan (5x5x7) (6x6x7)/Cube 0: Measurement grid: dx=7.5mm, dy=7.5mm, dz=5mm
Reference Value = 92.19 V/m; Power Drift = -0.18 dB
Peak SAR (extrapolated) = 11.8 W/kg
SAR(1 g) = 8.17 W/kg; SAR(10 g) = 5.89 W/kg (SAR corrected for target medium)
Info: Interpolated medium parameters used for SAR evaluation.
Maximum value of SAR (measured) = 9.24 W/kg

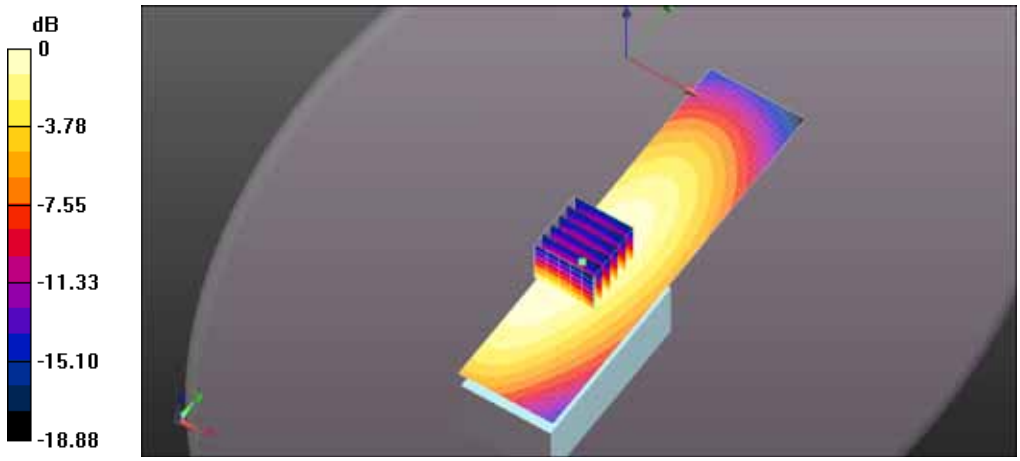

0 dB = 9.36 W/kg = 9.71 dBW/kg

File Name: 520MHz antenna FA-S76UC 520MHz.da52:0

DUT: DUT Sample Brick w. Antenna; Type: Sample; Serial: IMEI Number

Communication System: UID 10000, CW; Frequency: 520 MHz; Duty Cycle: 1:1
Medium parameters used: f = 520 MHz; σ = 0.983 S/m; ε_r = 54.065; ρ = 1000 kg/m^3 ; Phantom section: Flat Section ; Measurement Standard: DASY5 (IEEE/IEC/ANSI C63.19-2007)

DASY Configuration:

- Probe: ES3DV3 - SN3250; ConvF(7.12, 7.12, 7.12); Calibrated: 3/10/2025;
- Sensor-Surface: 3mm (Mechanical Surface Detection)
- Electronics: DAE4 Sn874; Calibrated: 7/29/2025
- Phantom: ELI 4.0; Type: QD OVA 001 BB; Serial: 1057
- DASY52 52.10.0(1446); SEMCAD X 14.6.10(7417)

ICOM 640QR4 520MHz FA-76UC 520MHz Body BP303N/Body - Belt Clip Touching, d=0mm, Pin=5W (ES-Probe)/Area Scan (41x161x1): Interpolated grid: dx=1.500 mm, dy=1.500 mm
Maximum value of SAR (interpolated) = 9.62 W/kg
ICOM 640QR4 520MHz FA-76UC 520MHz Body BP303N/Body - Belt Clip Touching, d=0mm, Pin=5W (ES-Probe)/Zoom Scan (5x5x7) (6x5x7)/Cube 0: Measurement grid: dx=7.5mm, dy=7.5mm, dz=5mm
Reference Value = 92.17 V/m; Power Drift = -0.37 dB
Peak SAR (extrapolated) = 11.7 W/kg
SAR(1 g) = 8.31 W/kg; SAR(10 g) = 6.02 W/kg (SAR corrected for target medium)
Maximum value of SAR (measured) = 9.38 W/kg

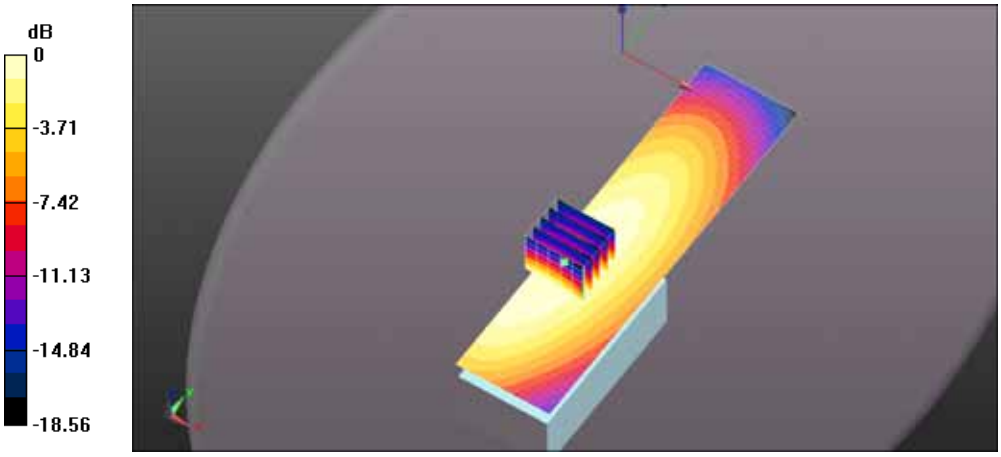

0 dB = 9.62 W/kg = 9.83 dBW/kg

Bluetooth

Power (W)	CH	CH. Freq (MHz)	HEAD SAR1g (W/Kg) BP-316	HEAD SAR10g (W/Kg) BP-316	Power Drift (dB)
10.3	0	2402	<0.001	<0.001	NA
10.1	39	2440	<0.001	<0.001	NA
9.3	78	2480	<0.001	<0.001	NA

Power (W)	CH	CH. Freq (MHz)	BODY SAR1g (W/Kg) BP-316	BODY SAR10g (W/Kg) BP-316	Power Drift (dB)
10.3	0	2402	<0.001	<0.001	NA
10.1	39	2440	<0.001	<0.001	NA
9.3	78	2480	<0.001	<0.001	NA

NA: No power drift as all area scans completed with no detectable hot spots for the zoom scan to analyze.

The measured SAR for the new 12.8mW BT module UT-136A was found to be less than 0.001 W/Kg.