IC-F4GT/GS ADJUSTMENT PROCEDURES

1: PREPARATION

When you adjust the contents on page 5 or 6, SOFTWARE ADJUSTMENT, the optional CS-F3G ADJ ADJUSTMENT SOFTWARE (Rev. 2.0 or later), OPC-478 CLONING CABLE and a JIG CABLE (see illustration at page 2) are required.

■ REQUIRED TEST EQUIPMENT

EQUIPMENT	GRADE AND RANGE	EQUIPMENT	GRADE AND RANGE
DC power supply	Output voltage : 7.2 V DC Current capacity : 5 A or more	Audio generator	Frequency range : 300–3000 Hz Output level : 1–500 mV
RF power meter (terminated type)	Measuring range : 1–10 W Frequency range : 300–600 MHz Impedance : 50 Ω SWR : Less than 1.2 : 1	Attenuator	Power attenuation : 40 or 50 dB Capacity : 10 W or more
		Standard signal generator (SSG)	Frequency range : 120–600 MHz Output level : 0.1 µV–32 mV (–127 to –17 dBm)
Frequency counter	Frequency range : 0.1–600 MHz Frequency accuracy : ±1 ppm or better Sensitivity : 100 mV or better		
		DC voltmeter	Input impedance : 50 kΩ/V DC or better
FM deviation meter	Frequency range : DC–600 MHz Measuring range : 0 to ±5 kHz	Oscilloscope	Frequency range : DC–20 MHz Measuring range : 0.01–20 V
Digital multimeter	Input impedance : 10 MΩ/V DC or better	AC millivoltmeter	Measuring range : 10 mV–10 V

■ SYSTEM REQUIREMENTS

- IBM PC compatible computer with an RS -232C serial port (38400 bps or faster)
- Microsoft Windows 95 or Windows 98
- Intel i486DX processor or faster (Pentium 100 MHz or faster recommended)
- At least 16 MB RAM and 10 MB of hard disk space
- 640×480 pixel display (800×600 pixel display recommended)

■ ADJUSTMENT SOFTWARE INSTALLATION

NOTE: Before using the program, make a backup copy of the original disk. After making a backup copy, keep the original disk in a safe place.

① Boot up Windows.
 - Quit all applications when Windows is running.
② Insert the backup disk1 into the appropriate floppy drive.
③ Select ‘Run’ from the [Start] menu.
④ Type the setup program name using the full path name, then push the [Enter] key. (A:\ setup)
⑤ Follow the prompts.
⑥ Program group ‘CS-F3G ADJ’ appears in the ‘Programs’ folder of the [Start] menu.

■ STARTING SOFTWARE ADJUSTMENT

① Connect IC-F4GT/GS and PC with the optional OPC-478 and the JIG cable.
② Boot up Windows, and turn the transceiver power ON.
③ Click the program group ‘CS-F3G ADJ’ in the ‘Programs’ folder of the [Start] menu, then CS-F3G ADJ’s window is appeared.
④ Click the TCXO tag.
⑤ Click ‘Connect’ on the CS-F3G’s window, then appears IC-F4GT/GS’s up-to-date condition.
⑥ Set or modify adjustment data as desired.

IBM is a registered trademark of International Bussiness Machines Corporation in the U.S.A. and other countries.
Microsoft and Windows are registered trademarks of Microsoft Corporation in the U.S.A. and other countries.
Screen shots produced with permission from Microsoft Corporation. All other products or brands are registered trademarks or trademarks of their respective holders.

• **ADJUSTMENT SOFTWARE'S SCREEN DISPLAY EXAMPLE**

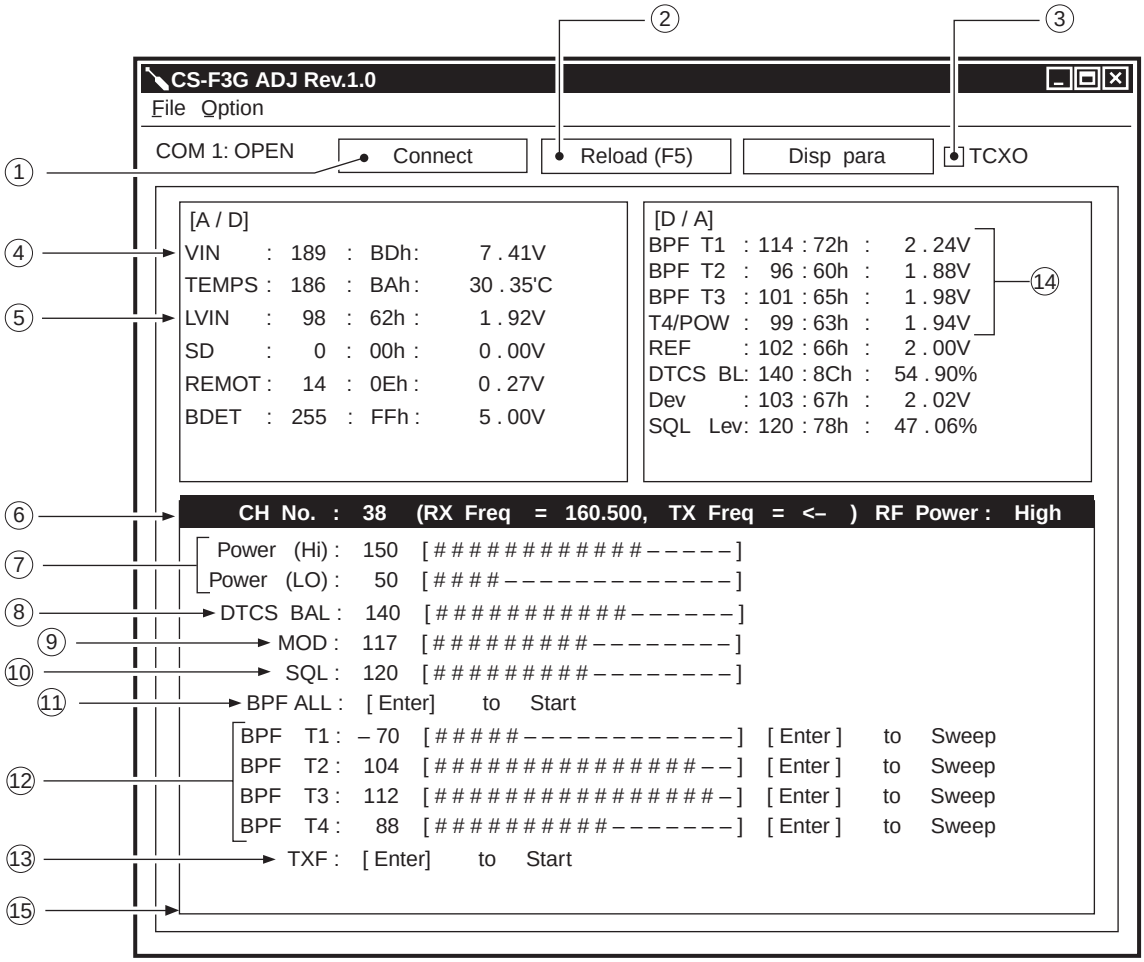

NOTE: The above values for settings are example only.
Each transceiver has its own specific values for each setting.

① : Transceiver's connection state
② : Reload adjustment data
③ : TXCO tag
④ : Connected DC voltage
⑤ : PLL lock voltage
⑥ : Operating channel select
⑦ : RF output power
⑧ : DTCS wave form
⑨ : FM deviation
⑩ : Squelch level
⑪ : Receive sensitivity (automatically)
⑫ : Receive sensitivity (manually)
⑬ : Reference frequency
⑭ : Receive sensitivity measurement
⑮ : Adjustment items

• **JIG CABLE**

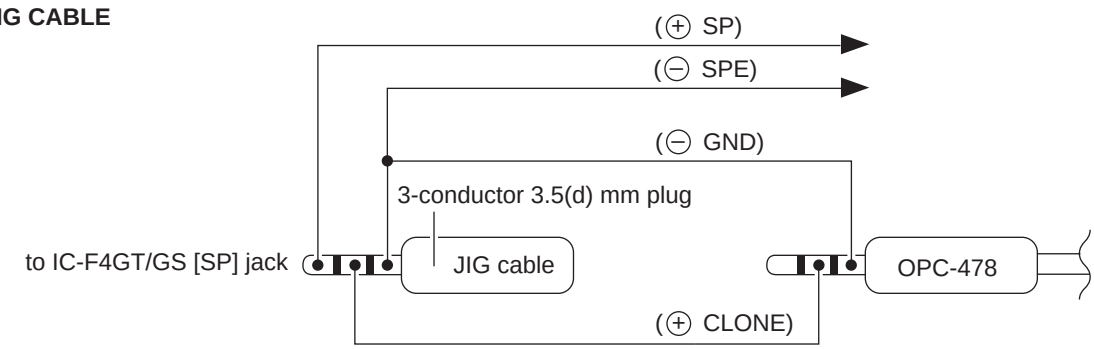

• **CONNECTION**

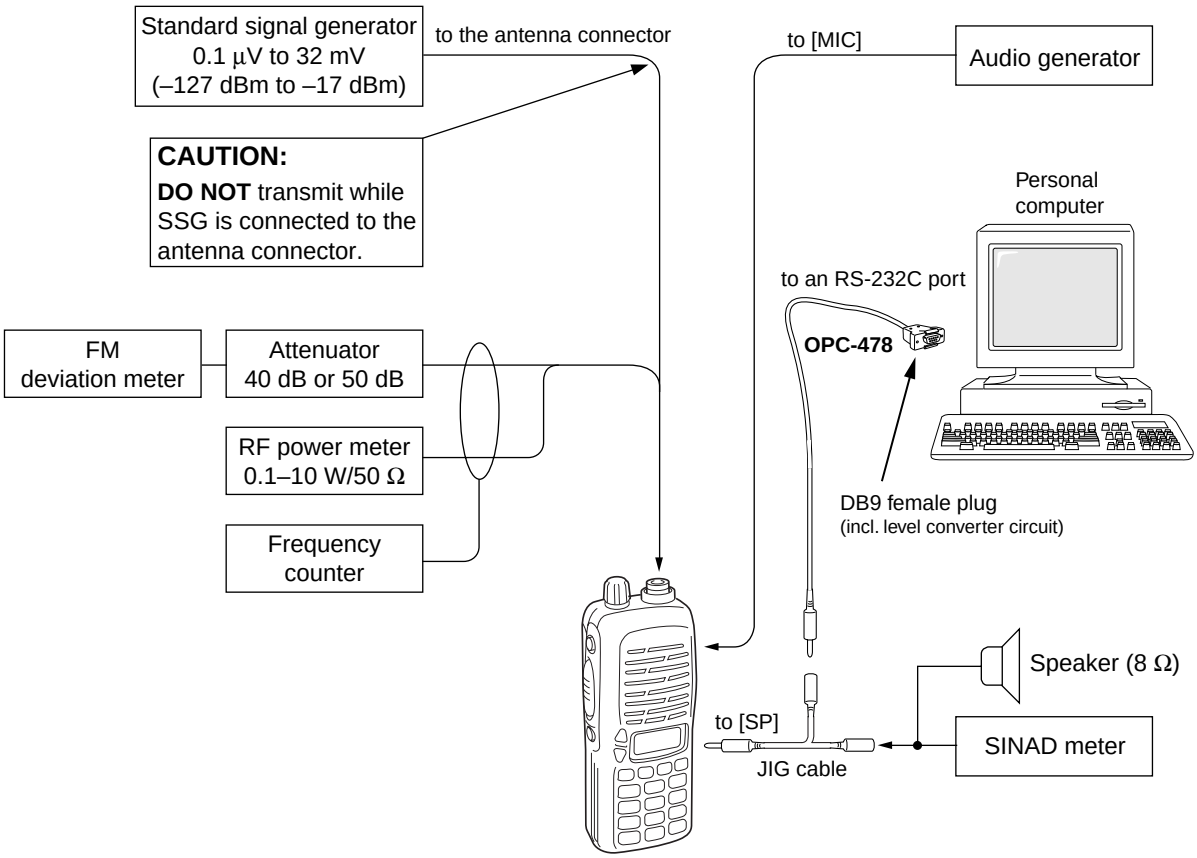

• **DC POWER CABLE CONNECTIONS**

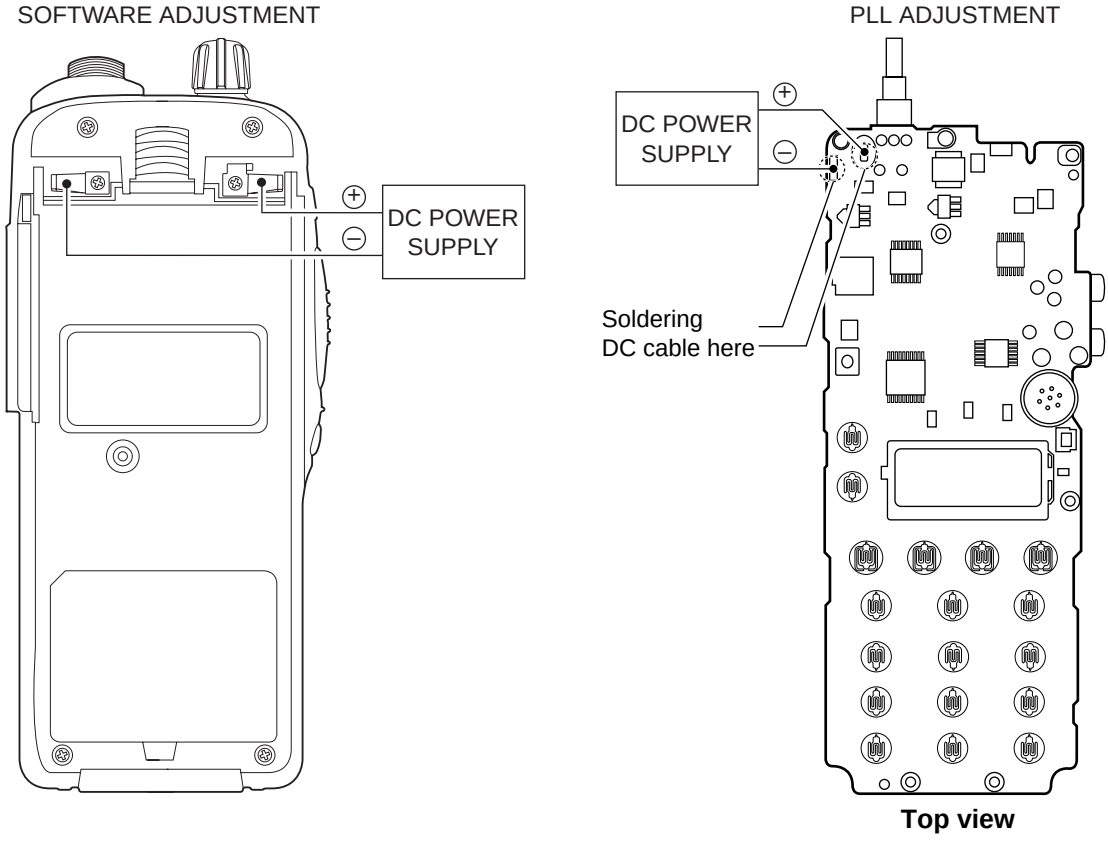

2: PLL ADJUSTMENT

ADJUSTMENT		ADJUSTMENT CONDITIONS	MEASUREMENT		VALUE	ADJUSTMENT	
			UNIT	LOCATION		UNIT	ADJUST
PLL LOCK VOLTAGE	1	• Operating frequency: 470.000 MHz • Receiving	MAIN	Connect a digital multi meter to check point LV.	1.3 V	MAIN	L11
	2	• Transmitting			1.3 V		L405
		• Operating frequency: 500.000 MHz • Receiving			3.0–4.5 V		Verify
		• Transmitting			3.0–4.5 V		

• MAIN unit

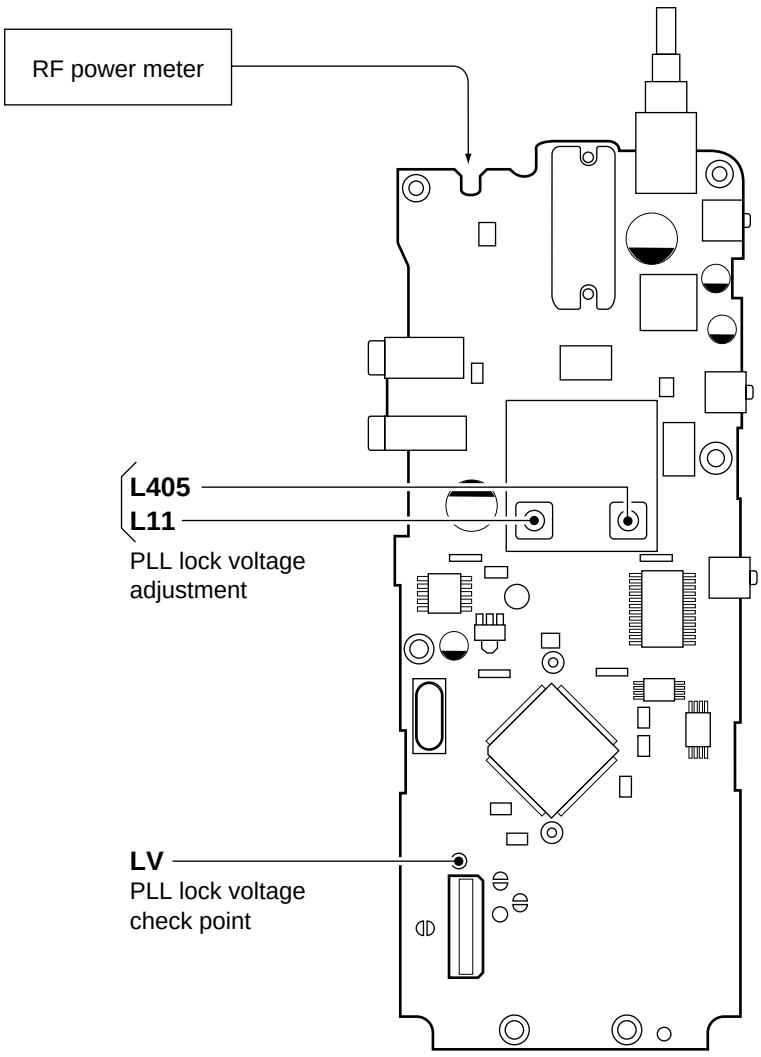

Bottom view

3: SOFTWARE ADJUSTMENT

Select an operation using [↑] / [↓] keys, then set specified value using [←] / [→] keys on the connected computer keyboard.

ADJUSTMENT		ADJUSTMENT CONDITION	MEASUREMENT		VALUE
			UNIT	LOCATION	
REFERENCE FREQUENCY [TXF]	1	• Operating frequency: 470.000 MHz • High/Low switch : Low • Connect the RF power meter or 50 Ω dummy load to the antenna connector. • Transmitting	Top panel	Loosely couple a frequnecy counter to the antenna connector.	470.00000 MHz
OUTPUT POWER [POWER(LO)]	1	• Operating frequency: 470.000 MHz • High/Low switch : Low • Transmitting	Top panel	Connect an RF power meter to the antenna connector.	1.0 W
[POWER(HI)]	2	• High/Low switch : High • Transmitting			4.0 W
FM DEVIATION [MOD]	1	• Operating frequency: 470.000 MHz • High/Low switch : Low • Connect the audio generator to the [MIC] jack and set as: 1.0 kHz/150 mVrms • Set the FM deviation meter as: HPF : OFF LPF : 20 kHz De-emphasis : OFF Detector : (P–P)/2 • Transmitting	Top panel	Connect an FM deviation meter to the antenna connector through the attenuator.	±2.0 kHz
DTCS WAVE FORM [DTCS BAL]	1	• Operating frequency: 500.000 MHz • High/Low switch : Low • No audio applied to the [MIC] jack. • DTCS code : 007 • Transmitting	Top panel	Connect an FM deviation meter with an oscilloscope to the antenna connector through an attenuator.	Set to flat wave form 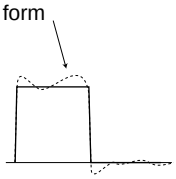

SOFTWARE ADJUSTMENT – continued

Select an operation using [↑] / [↓] keys, then set specified value using [←] / [→] keys on the connected computer keyboard.

ADJUSTMENT		ADJUSTMENT CONDITION	MEASUREMENT		VALUE
			UNIT	LOCATION	
RX SENSITIVITY [BPF T1] – [BPF T4]	1	• Operating frequency: 470.000 MHz • Connect a standard signal generator to the antenna connector and set as: Frequency : 470.000 MHz Level : 10 µV* (–87 dBm) Modulation : 1 kHz Deviation : ±1.75 kHz • Receiving	Top panel	Connect a SINAD meter with an 8 Ω load to the [SP] jack.	Minimum distortion level
		CONVENIENT: The BPF T1–BPF T4 can be adjusted automatically. ①-1: Set the cursol to “BPF ALL” on the adjustment program and then push [ENTER] key. ①-2: The connected PC tunes BPF T1–BPF T4 to peak levels. or ②-1: Set the cursol to one of BPF T1, T2, T3, or T4 as desired. ②-2: Push [ENTER] key to start tuning. ②-3: Repeat ②-1 and ②-2 to perform additional BPF tuning.			
SQUELCH LEVEL [SQL]	1	• Operating frequency: 470.000 MHz • Connect a standard signal generator to the antenna connector and set as: Frequency : 470.000 MHz Level : 0.2 µV* (–121 dBm) Modulation : 1 kHz Deviation : ±1.75 kHz • Receiving	Top panel	Connect a SINAD meter with an 8 Ω load to the [SP] jack.	12 dB SINAD
	2	• Receiving			At the point where the audio signals just appears.

*The output level of the standard signal generator (SSG) is indicated as the SSG’s open circuit.