Thank you for using the Yahu 3G wireless room access system, in order to ensure the best results, please read this manual carefully.

Installation Notes

Before installation, ensure that the door openings and the openings of the product are consistent, and ensure that the specifications of the door meet the requirements of the product.

Operation Caution

1. When using this product, please keep your fingers clean, do not operate this product with wet fingers. Please assure that no liquid flowing into the inside of product, improper operation will damage this product.
2. Do not touch the scratch fingerprint collection window by any hard or sharp object.
3. Do not use the product under any environment like strong electromagnetic interference, acid, wet, sun exposure or other harsh environment.
4. Avoid exposing the product especially the battery to high temperatures. It will alarm and screen prompts when the battery is low, please change the battery in time. Used batteries should be put into the designated recycling bins. Please pay attention to environmental protection.
5. Please keep your password properly and must not disclose the password to others.
6. Inputting of the false fingerprint up to 10 times continuously will cause the system shut down for three minutes; Input of the false password up to 5 times continuously will cause the system shut down for 3 minutes. The system will restart automatically 3 minutes later.
7. When you leave home, be sure to check if the door lock is intact or not.
8. The surface of the acquisition window will be dirty after using for a while, it may cause the failure of the product. Please keep the daily cleaning of the acquisition window. When cleaning the product, use a clean, soft towel, do not use water or any corrosive chemical solvents to avoid damage to the locks appearance and the internal electronic circuits.
9. When the fingerprint and password can not open the door, you can use the emergency mechanical key to open the door. Mechanical key must be placed on safe places outside (such as car, office, etc.).
10. Children can not use the production without the supervision of an adult, do not use the product as toys.

Contents

1. Company profile 03
2. Packing list 04
3. System diagram 05
    3.1 The composition of the outdoor unit 06
    3.2 The composition of the indoor unit 07
    3.3 Indoor unit charger base 08
4. Functional specification and working process
    4.1 Functional specification 09
    4.2 System characteristics 10
    4.3 Working process 11
    4.4 Explanationof term 12
5. Operating instructions
    5.1 Install the battery and charging 13
    5.2 Screen 14
    5.3 Setting adjustment 14-18
6. Specifications, notes and fault diagnosis 19-21

Jinan Qianxi Yahu Industry Co., Ltd. is a large collectivized company which is leaded by the high technologys, the company is integrated by producing and marketing. The Yahu 3G wireless room access system which is developed by the German technology is successfully produced by our company, it causes the technology revolution in the smart-lock industry.

Yahu 3G wireless room access system adopts the global leading wireless transmission technology, it integrates video, voice, wireless control in one body, it is a technology revolution of the traditional visible intercom system and smart-lock industry. It can be widely used in common residence, villas, office and other occasions. It attracts many successful people with its highly humanized design.

So far, the Yahu 3G wireless room access system has already applied for many international patents, all technical indexes of our system have reached the FCC, CE, R&TTE standard, the product can be exported to America, Europe and other western countries and regions directly.

【Note】：All illustrations and the screen display used in this manual is for describing the operation of this product more detailed. It may be slightly different with the actual use of the product because of the upgrading to the version and the different production batch, please refer to actual product!

Serial numbe	1	2	3	4	5	6	7	8	9	1 0
Name	Indoor unit	Outdoor unit	Charging base	Rear panel of the outdoor unit	Battery 1	Battery 2	Charging adapter	2.0 screw	Operating instruction	After-sales service card
Quantity	1	1	1	1	2	2	1	2	1	1

Yahu 3G wireless room access system combines the high electronic locks and wireless visible intercom system together, it makes the man-machine dialogue coming true.

The whole outdoor unit is embedded into a door, it can transfer video and voice of the visitor to a mobile switch phone, the host can realize the visible intercommunicate and a key to unlock with the visitor by using mobile switch phone.

The installation of Yahu 3G wireless room access system is simple, no wiring required, it is all-round humanized designed and multiply safety guaranteed and can be used conveniently. It is the perfect combination of high-technology and fashionable appearance.

3.1 The composition of the outdoor unit >>>>

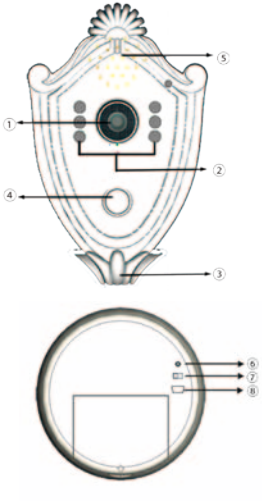

Components and button instruction :

1. Camera (it is used to obtainimage of outdoor and visitor)
2. Night vision light (it is used to recognize the visitors on evening and test the light around in real time. It will start the fill light system immediately when light is insufficient.)
3.Miniature microphone (It is used to send the sound of the visitors to the indoor unit)
4. Call button (Press the button to call the indoor unit, then the camera will be started and the images of the visitor will be saved automatically)
5. Speaker (it is used for the visitor to talk to the host indoor through the speaker,)
6. LED
7. Power supply switch
8. USB

3.2 The composition of the indoor unit>>>>

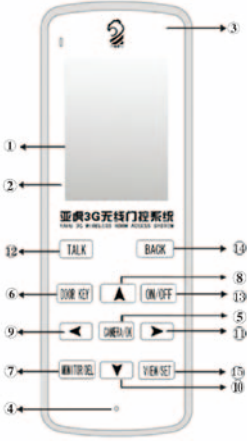

Components and button instruction:

1. TFT LCD screen (Display image of outdoor and visitors)
2. Speaker (Through the speaker on the back, the host can hear the sound "ding dong, ding-dong" from the outdoor unit and hear the sound from visitors)
3. Internal antenna (It is used to send the voice, the signals for lock and other operation to the outdoor unit, and receive the signals for sound, image, calls and other operation of outdoor unit)
4. Miniature microphone (It is used to send the host's voice to the outdoor unit)
5. CAMERA/OK (ready to take pictures/take pictures)
6. DOOR KEY (It is used to control the outdoor unit to open the lock)
7. MONITOR/DEL (It is used to start monitoring the outdoor environment/Delete the image)
8. Up key +: (Increases brightness of the image /Increase volume/image up/time +)
9. Left shift
10. Down key -: (Lower brightness of the image /Lower the volume/image down/time-)
11. Right shift
12. TALK(It is used to talk the outdoor unit)
13. ON/OFF (Turn on or shut off the power)
14. BACK (Back to last page/ press and hold down the key for 2 seconds to exit the standby state)
15. VIEW/SET (it is used to browse images and set menu)

3.3 Indoor unit charger base>>>>

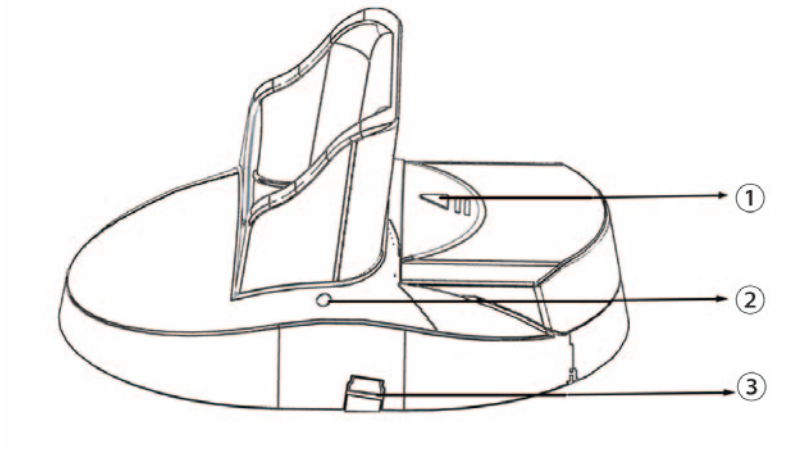

Components and button instruction:

1. Battery Warehouse : Placed The Battery
2. LED : Charge Lamp
3. USB : Charging Conversion Mouth

4.1 Functional specification>>>>

1. All date of the wireless video intercom system (including audio, video, and control instructions, etc) is transferred by wireless tra nsmission, the clearings signal barrier-free transmission distance is no less than 350 meters, it is strongly anti-interferential..
2. Hands-free calls and video intercom.
3. The indoor unit can monitor outdoor unit for 24-hourevery day.
4. The wireless unlocking module has the built-in system, the indoor unit can control fingerprint lock unlock through the outdoor unit. The fingerprint lock will start automatically if there is no operation in 5 seconds
5. The indoor unit can take photos automatically through the outdoor unit, and new photos can cover the previous old photos automatically when the storage space is full. With the function of taking photos automatically, the indoor unit could take the photos of the visitor automatically when the visitor comes with no one indoor
6. The power supply switch is in the back of the outdoor unit, the user can control the start and close of the electric function through it to lower the power consumption and extend the use time of battery power.
7. The system can be used separately not only in villa, office and many other occasions, it can also be applied in the high buildings. It could combine with the special cable visual intercom system of building perfectly. The cable signal can be transferred into a wireless signal by switching the device, so our users can enjoy the convenience brought by our integrated system. Our company can provide a whole set of solutions.

4.2 System characteristics>>>>

- Patented product Easy to install
- All data are wireless transmissing
- Digiral frequency-hopping Encypting technology
- High-energy lithium battery Long standby
- Larg storage Active antomatic photo
- 24hours monitoring
- One to many many-to-one,mulit-point transmission
- Compatible with the original system
- Easy to opeerate

4.3 Working process>>>>

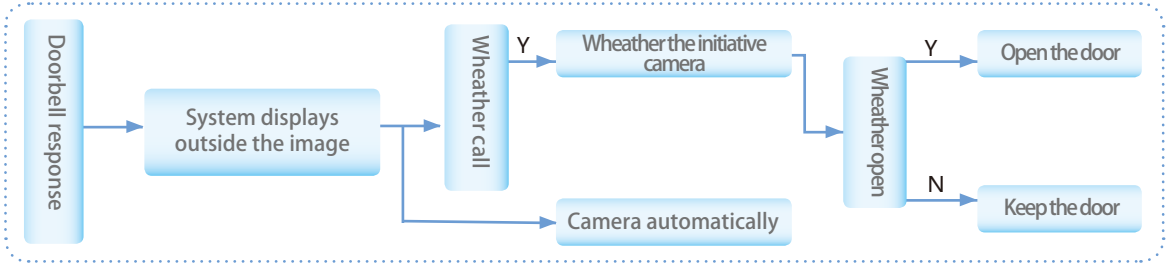

1. When visitors press the doorbell button on the outdoor unit and the doorbell rings, the indoor unit will response and rings the doorbell at the same time.
2. After the doorbell rings, the screen will display the images of the visitors.
3. The user presses the call key, to enter the video intercom status. The outdoor unit will take photos of the visitor automatically and save the picture in the indoor unit.
4. When user presses the lock button under the state of calling, the indoor unit will send the control signal to the outdoor unit. After receiving the signal, the outdoor unit will transfer the signal to the fingerprint lock to unlock it, then the unlock order is done. The entrance guard will keep shut without the press to button.

4.4 Explanation of term>>>>

◆ 2.4G wireless technology:

The band of 2.4G wireless technology is between 2.405GHz-2.485GHz (it is mainly used in science, medicine and agriculture).It is called 2.4G wireless technology for short. This band is the free band of the international regulations. No fee is need for using this band. This provides the necessary favorable conditions for the development of the 2.4G wireless technology. Differ from the old 27MHz wireless technology, the 2.4G wireless technology uses a full-duplex mode transmission, it is absolutely advanced on the anti-jamming performance than 27MHz. In addition, the theoretical data transfer rate of 2.4G wireless technology reaches to 2M, it doubles the theoretical transfer rate of Bluetooth of 1M. This is a reliable guarantee for the future application layer.

Integrated the common wireless transmission technology of 2.4G, Bluetooth and 27MHz, 2.4G has its own unique advantages. Its production cost is lower than Bluetooth product and its data transfer rate is much higher. Compared to the 27MHz wireless technology which is also free charge, the interference immunity, the maximum transmission distance and the consumption of power of 2.4G are much better.

◆ Frequency Hopping technology:

Hopping is one of the most common used spread spectrums and its working principle is to carry the frequency of the receiver and transmit signals to discrete changes in the means of communication. In other word, the carrier frequency used in the communication is controlled by the pseudo-random changes in code and transited randomly.

The "frequency hopping" is a code sequence means of communication technically, it is also a communication system controlled by frequency shift keying code carrier. On the time domain, the frequency-hopping signal is multi-frequency shift keying signal. On the frequency domain, the frequency hopping signal spectrum is a very wide band, ranging from interval random transition.

5.1 Install the battery and charging>>>>

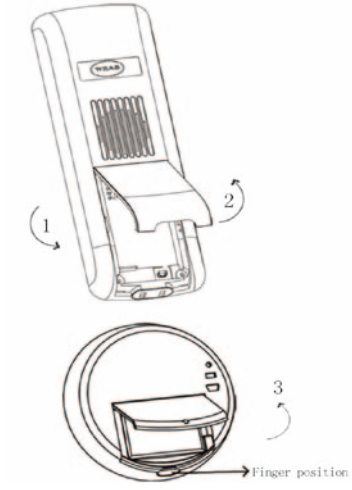

The method of indoor unit installation:

1. Gently press down the battery cover and push the battery cover with a little strength;(see Arrow 1)
2. Open the battery cover from the bottom (see arrow 2), and remove the battery cover;
3. Insert the battery, pay attention to the direction of the battery interface, close the battery cover.

The method of outdoor unit installation:

1. Put a Finger on the finger position
2 . Open the battery cover upward tilt by finger (arrow 3);
3. Insert the battery, pay attention to the direction of the battery interface, close the battery cover.

5.2 Screen display >>>>

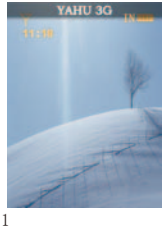

fig. 1

5.3 Setting adjustment

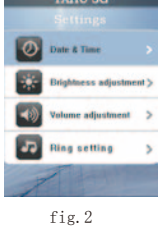

fig. 2

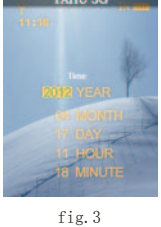

fig. 3

1. Boot screen

Long press power key, the screen will display this picture for about 2 seconds, it indicates that the machine starts normally and enter standby mode. The system will turns off automatically and the screen will be in a suspended state after entering standby mode for 10s!(fig. 1)

2. Setting menu

Under the standby state, long press the image key for 3 seconds to enter the set menu (4), default state is to adjust time and date, press the up or down keys to select, and press the take pictures (OK) key to enter the appropriate settings.(fig. 2)

3. Date and time menu

Under the date and time state, press the left/right key to enter the date and time adjustment, press the up or down key to adjust date and time, press the take pictures / OK key after setting is done. (fig. 2&fig. 3)

fig. 4

4. Brightness adjustment menu

Similar to the above menu, in the setting menu, select the brightness adjustment menu through the up/down keys, press the take pictures (OK) key to enter the brightness adjustment screen. Under brightness adjustment state, adjust the screen brightness through up and down keys, press the take pictures / OK key after setting is done. (fig. 4)

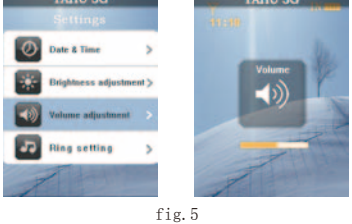

fig. 5

5. Volume adjustment menu

Similar to the above menu, in the setting menu (4), select the volume adjustment menu through the up/down keys, press the take pictures (OK) key to enter the volume adjustment screen. Under volume adjustment state, adjust the volume through up and down keys can, press the take pictures / OK key after setting is done. (fig. 5)

fig. 6

fig. 7

fig. 8

6. Ring setting menu

Similar to the above menu, in the setting menu (4), select the ring setting menu through the up/down keys, press the take pictures (OK) key to enter the ring setting screen. Under ring setting state, select the type of ring through up and down keys , press the take pictures / OK key after setting is done.(fig. 6)

7. Take pictures menu

Under the call and monitoring state, press the taking pictures key, the screen appears "P" and enter to the camera mode, press the taking pictures key to take pictures in the doorway, pictures are stored in the indoor unit after 100ms and are available for browsing in future.(fig. 7)

8. Monitor menu

When the outdoor unit is turned on and the indoor unit is standby, press the monitor key, the screen appears "small eye" pattern, and it enter to monitor mode. It can monitor continuously for 24 hours everyday, to observe the outdoor circumstance and provide real-time view, non-video storage capabilities. It will enter to the dormant state in 40s without any operation.(fig. 8)

fig. 9

fig. 10

fig. 11

fig. 12

9. Unlock menu

Press the unlock button when the outdoor unit calls the indoor unit or when the unit is occupied, the electronic lock will be unlocked.. It will enter to the dormant state in 10s without any operation after pressing the unlock button.(fig. 9)

10. Image menu

Under the standby state, press the image key to browse photographs, and short press the monitor key to delete the photo you don't need, the screen will show the message of "delete or not"| Long press the monitor key for 2 seconds, the screen will display the message of "delete all or not". Press the left right key to select "Yes" or press the left right key to select "No", press the take pictures key to confirm the order of deleting all photos or return to the last page.(fig. 10)

11 . Battery power

There are two icons to show the battery power on the top right screen when the indoor unit is working. The above one is to show the power of the indoor unit and the under one is to show the power of the outdoor unit .(fig. 11)

12. Signals and time display

There is an icon to display the signals and time on the top left screen when the indoor unit is working.(fig. 12)

fig. 13

13. Calling screen display

Under the calling state, the screen of indoor units displays the instant video of visitor. It will appear an icon of a small “horn” after pressing the calling button and enable the communication between the host indoor and visitor outdoor. The system will be back to dormant state in 40 seconds if no operation (including unlock)(fig. 13)

fig. 14

14.No operating state

The system will return to dormant state under almost all states by absence of operation for 10 seconds or more, except for being under he states of calling, communicating and monitoring.(fig. 14)

6.1 Specifications>>>>

Outdoor unit		Indoor unit	
Camera	CMOS 300,000 pixels	Screen specifications	2.4″TFT 320*240
Light source	Six LED lights	Battery	3.7 V 1200mAh lithium batteries
Power consumption	standby 0.2W	Power consumption	standby 0.1W
Modulation mode	GFSK	Modulation mode	GFSK
Communication frequency	2.4GHz	Communication frequency	2.4GHz
Transmission power	10dBm	Transmission power	10dBm
SDCCH	64	SDCCH	64
Charging time	10hours	Charging time	6hours
Standby time	60days	Standby time	7days
Input	100-240V ～50/60HZ 0.15A MAX		
Output	5V ⎓ 1.0A		

6.2 Notes>>>>

1. Our product should be placed on a solid place with good ventilation conditions and dry air which also avoids direct sun exposure, strong magnetic field and dust;
2. Do not clean the surface of our product with chemicals, we suggest use a soft dry cloth to clean;
3. Avoid pressing different keys at one time.
4. Outdoor unit and indoor unit can support the use of the specified models, do not mix using the unit with other models or product not produced by our company;.
5. Do not disassemble the product without permission, please contact the local dealer or our technical department for help if there is major failure to our product.

6.3Fault diagnosis> > > >

Phenomenon	Diagnosis	Solution
Can not boot	Does the switch is in ON position?	Put the switch to ON location
	Is the lithium battery power sufficient?	Charge to Lithium battery
	Does the power adapter connect well?	Connect the ac adapter
Can't charge	Does the power adapter plug insert into the machine correctly?	Connect the machine to power adapter correctly
	Does the power adapter connect to the 110-240V ac?	Connect the power adapter to ac power by plugging into the socket
No voice under the call state	I s the volume turned on the minimum?	Adjust the volume
Pixels or flashing on images	Is the indoor unit placed near TV, microwave oven, fluorescent light, cell phone and other stuff with electromagnetic interference?	Away our machine from the stuff with electromagnetic interference.
No signal displayed on indoor unit	Does the outdoor unit connect to power?	Supply power to outdoor unit
	Is the outdoor unit too far from the indoor unit?	Adjust the distance between the outdoor unit and the indoor unit within 60 meters (under the condition of multi-wall barrier between them)
	Is there strong magnetic interference around the machine?	Move the indoor unit away from the magnetic interference

FCC STATEMENT

1. This device complies with Part 15 of the FCC Rules. Operation is subject to the following two conditions:

(1) This device may not cause harmful interference.

(2) This device must accept any interference received, including interference that may cause undesired operation.

2. Changes or modifications not expressly approved by the party responsible for compliance could void the user's authority to operate the equipment.

NOTE: This equipment has been tested and found to comply with the limits for a Class B digital device, pursuant to Part 15 of the FCC Rules. These limits are designed to provide reasonable protection against harmful interference in a residential installation.

This equipment generates uses and can radiate radio frequency energy and, if not installed and used in accordance with the instructions, may cause harmful interference to radio communications. However, there is no guarantee that interference will not occur in a particular installation. If this equipment does cause harmful interference to radio or television reception, which can be determined by turning the equipment off and on, the user is encouraged to try to correct the interference by one or more of the following measures:

Reorient or relocate the receiving antenna.

Increase the separation between the equipment and receiver.

Connect the equipment into an outlet on a circuit different from that to which the receiver is connected.

Consult the dealer or an experienced radio/TV technician for help.

RF warning statement:

The device has been evaluated to meet general RF exposure requirement. The device can be used in portable exposure condition without restriction.