TYPE OF EXHIBIT:	INSTALLATION AND OPERATING INSTRUCTION MANUAL
FCC PART:	2.1033 (c)(3)
MANUFACTURER:	RITRON, INC. 505 West Carmel Drive Carmel, IN 46032
FCC ID:	AIERIT18-456
MODELS:	RQX-456, RQX-456-XT
DATE:	February 16, 2004

IC STANDARDS:	RSP-100, Issue 8, Section 7.2(b)
INDUSTRY CANADA:	1084A-RIT18456
MODELS:	RQX-456-CANADA, RQX-456-XT-CANADA

Included in this exhibit is a draft of the User Manual for the RITRON Models RQX-456 and RQX-456-XP UHF-FM Transceiver. A copy of this manual will be included with every radio.

This manual provides the end user with installation and operating instructions.

Signed: Michael A. Pickard

Michael A. Pickard - Project Engineer

RITRON®

OUTPOST™

Wireless Callbox
Basic Owner's Manual

Ritron Pub. 14500042 ***Rev. A*** ***01/04***

Copyright© 2004 RITRON, INC. – ALL RIGHTS RESERVED
RITRON®, PATRIOT®, JOBCOM®, Quick Assist®, and Quiet Call® are registered trademarks of RITRON, INC. OUTPOST™ and Quick Talk™ are trademarks of RITRON, INC.

P.O. Box 1998, Carmel, IN 46082-1998 • 505 W. Carmel Dr., Carmel, IN 46032 • USA
Phone: 317-846-1201 or 800-USA-1-USA (800-872-1872) • FAX: 317-846-4978
Web: www.radiocallbox.com • E-mail: ritron@ritron.com

TABLE OF CONTENTS

Description **Page**

WHAT THIS MANUAL COVERS ii
OUTPOST CALLBOX MODEL NUMBERS 1
ABOUT THE OUTPOST WIRELESS CALLBOX 1
OPERATING THE OUTPOST CALLBOX 2
OPTIONAL OUTPOST CALLBOX FEATURES 2
INSTALLATION INSTRUCTIONS
- FIG-1: Callbox Assembly, Controls and Connectors 3
- OUTPOST Installation Instructions 4
- XT OUTPOST Installation Instructions 4
- FIG-2: XT Callbox Mounting Brackets – Vertically Installed 4
- FIG-3: XT Callbox Assembly 5
- XT Gate Guard Installation Instructions 6
- FIG-4: Charge Jumper in Charge Position 6
- FIG-5: XT Callbox Gate Guard Assembly with Battery Back-Up 7

PROGRAMMING
- HOW TO READOUT CURRENT RADIO PROGRAMMING 8
- HOW TO FIELD PROGRAM FREQUENCY & TONE CODES 9
- HOW TO FIELD PROGRAM 2-TONE DECODE 10
- HOW TO FIELD PROGRAM RADIO FEATURES 11
- Table 1: Programmable Frequency Codes 12
- Table 2: Programmable QC Tone Codes 13
- Table 3: Programmable DQC Codes 13
- Table 4: Programmable 2-Tone Codes 13
- Table 5: Programmable Features 13
- FIELD PROGRAMMING GATE GUARD 14
- OPTIONAL GATE GUARD PROGRAMMING 14
- INTERCOM (ALWAYS-ON) PROGRAMMING 15

HOW TO SEAL THE ANTENNA 15
EXPOSURE TO RADIO FREQUENCY ENERGY 16
FCC LICENSE REQUIRED
- Licensing 16
- Safety Standard 16
- Service 16
- How to Obtain an FCC License 16

RITRON Limited Warranty 17

WHAT THIS MANUAL COVERS

This manual covers programming, operation and installation of the OUTPOST 2-Way Callbox models RQX-156, RQX-156-XT, RQX-456, and RQX-456-XT.

THANK YOU FOR CHOOSING RITRON

Congratulations on your purchase of the OUTPOST Callbox.

Your new radio is the culmination of RITRON's 25 years of designing, manufacturing, and supplying reliable, professional wireless communication products. Ritron wireless products will improve the operation, safety, and profitability of any organization by providing instant voice communications between employees throughout the workplace.

Standard Callbox

XT Callbox

OUTPOST CALLBOX MODEL NUMBERS

VHF MODELS

RQX-156 .....Standard VHF Callbox

RQX-156-XT .....Vandal-Resistant VHF Callbox

UHF MODELS

RQX-456 .....Standard UHF Callbox

RQX-456-XT .....Vandal-Resistant UHF Callbox

The model number is located on the bottom of the standard Callbox enclosure. On XT models the Standard enclose is located inside the yellow vandal-resistant box.

VHF radios are designed to operate within the 12 MHz band between factory standard 150 and 162 MHz.

UHF radios are designed to operate within the 20 MHz band between factory standard 450 and 470 MHz.

ABOUT THE OUTPOST WIRELESS CALLBOX

The OUTPOST Callbox is a 2-way radio transceiver used to communicate directly with portable, mobile and stationary radios, or through radio repeaters.

Each OUTPOST Callbox is equipped with the following features:

- **Field Programming.** The Callbox allows you to quickly program your radio in the field without the need for a PC programmer. Each radio can be field programmed to one of 26 VHF or 77 UHF channel table frequencies, and one of 51 QC or 83 DQC interference eliminator codes.
- **MURS Frequencies.** VHF models can be programmed from a list of 5 MURS frequencies that require no FCC licensing in this service.
- **QC (Quiet Call) interference eliminator codes.** The Callbox can be programmed from a list of 51 QC Sub-audible codes.
- **DQC (Digital Quiet Call) interference eliminator codes.** Each Callbox can be programmed from a list of 83 DQC Sub-audible codes.
- **Battery Powered.** The OUTPOST Callbox is powered by 6 Alkaline, D-cell batteries that can operate the radio for up to one year.
- **Low battery alert.** The Callbox will send a short beep at the end of each transmission when the batteries approach end-of-life. This allows the user plenty of time to replace the batteries and assure uninterrupted service.
- **Wide or narrow band operation.** The radio can be programmed for wide or narrow operation by selecting from a wide variety of field programmable table frequencies, or by PC programming.
- **Companded Audio.** The radio can be field programmed to enable or disable audio companding. Companding will compress transmit audio before sending it, and expand receive audio before it is heard on the speaker to reduce the background noise common in radio communications.
- **Sensor Input.** Each OUTPOST has a single sensor input that can cause the radio to send an alert tone when sensor input is detected.
- **"Wake-up" or "Intercom" mode operation.** The OUTPOST Callbox can operate in the standard "Wake-Up" mode, where the radio is normally off until the Call Button is pressed, or can be programmed for "Intercom" mode where the radio is always on.

OPERATING THE OUTPOST CALLBOX

The OUTPOST will not receive a call unless a call is 1st initiated by the OUTPOST.

THE OUTPOST AUTOMATICALLY SHUTS OFF WHENEVER THERE IS INACTIVITY FOR TEN (10) SECONDS.

To Initiate a Call:

Press and hold the ON/PTT Button on the unit, listen for the "beep", and begin speaking into the MIC. For best communication, speak as closely as possible into the microphone. The OUTPOST has been designed for the caller to speak into the OUTPOST Callbox from a distance of 3 feet or less.

To Receive a Response:

1. When you have finished speaking, release the ON/PTT Button.
2. Any reply will be heard through the OUTPOST speaker. If a reply is not received within 10 seconds of releasing the ON/PTT Button, the unit sounds a low double tone and shuts off automatically.
3. To call again, press and hold the ON/PTT Button and begin speaking after the "beep".

Operation Notes:

The OUTPOST must be powered with D-cell Alkaline batteries ONLY, or alternatively, with an external 12 VDC power supply.

If there has been no activity for 10 seconds, i.e., either the ON/PTT Button has not been pressed and released or a reply has not been received, the unit automatically shuts OFF. The automatic shutoff feature is designed to increase battery life.

OPTIONAL OUTPOST CALLBOX FEATURES

The OUTPOST Callbox has many optional features available through PC Programming.

Intercom (Always-On)

The OUTPOST can be PC programmed to operate as a two-way intercom. When this feature is activated the 10 second automatic shut-off is disabled and the Callbox will operate in a "standby" mode, allowing the Callbox to receive calls at any time.

Operating the Callbox in Intercom mode significantly increases the battery drain, and is therefore not recommended for battery powered applications. Refer to "External 12 VDC Power Supply" in the Installation section of this manual. If battery powered operation is required, battery drain can be reduced with the "Battery Saver" feature detailed in this section.

Battery Saver

When the Outpost Callbox is programmed to operate in Intercom (Always-On) mode, Battery Saver can increase battery life in both internal or external battery powered applications.

With Battery Saver activated, the Callbox will periodically "wake-up" and listen for a received signal before returning to a low current "sleep" state. The time between "wake-up' states can be PC programmed between 1-255 seconds. A longer time between "Wake-up" states will result in increased battery life.

The Callbox immediately leaves Battery Saver mode any time the ON/PTT Button is pressed or a signal is received, and will not return to Battery Saver until the 10 second inactivity timer has expired.

Inactivity Timer

Set from the factory for 10 seconds, the inactivity timer can be PC programmed for 1-255 seconds. A shorter inactivity time will result in increased battery life. In standard "Wake-Up" operation a longer inactivity timer will allow more time for a response before the Callbox turns off.

Switch Output

The OUTPOST Callbox can be PC programmed to open and close the Switch Output whenever a unique 2-tone code is received. The switch output is a simple contact closure that may be used to open and close a gate, switch on a light, sound an alarm or any other application where an ON/OFF switch is required.

The Callbox can be field or PC programmed to alternately open and close the switch using a single 2-tone code, or can be PC programmed for unique open and close 2-tone codes. Field programming offers nine 2-tone codes that correspond to field programmable 2-tone codes available in select RITRON portable and base radios.

Sensor Input

The Callbox can be PC programmed to send a warning tone when a change in the Sensor Input is detected. The Sensor Input can be set to respond to an open or closed switch.

Response Tone

The OUTPOST Callbox can be PC programmed to send a unique Response tone after it receives a signal to indicate the current status of the Switch Output or the Sensor Input.

Battery Back-Up Alert

In installations with an external 12 VDC power supply and internal battery back-up, the OUTPOST can be PC programmed to send an alert tone at the end of each transmission when the unit is operating on the back-up battery.

Busy Channel TX Inhibit

When a user is transmitting on your radio frequency without your tone, you will not be allowed to transmit. The radio will beep a series of long, low tones while the ON/PTT button is held down (like a busy signal).

CALLBOX CONTROLS AND CONNECTORS

Antenna Connector

The antenna radiates radio signals. Before using the OUTPOST Callbox, make sure the antenna is securely fastened into the 50Ω BNC antenna connector. If the Outpost is to be used outdoors, see page 15 for instructions on properly sealing the antenna connector.

RF Mating Connectors

An internal cable fron the antenna connector is terminated into a phono style conector for connection to the radio circuit board.

Captive Plastic Case Screws

A captive plastic case screw is located in each corner of the case front. These 4 screws are used to secure the case front containing the radio, to the case back that contains the batteries.

Charge Jumper

The charge jumper can be set to trickle charge re-chargeable backup batteries.

+12 VDC Input

Two screw terminal style connectors are used for the "+" and "-" connection of an external +12 VDC input for installation without batteries.

Sensor Input

Two screw terminal style connectors are used for the "+" and "-" connection of an external DC level sensor.

Switch Output

Two screw terminal style connectors are used for the "+" and "-" connections of a 5A switch closure output.

Speaker Connector

The internal speaker is connected to the radio printed circuit board with a polarized connector.

On/PTT Connector

The On/PTT switch is connected to the radio printed circuit board with a polarized connector.

Pre-Drilled Mounting Holes

Mounting holes located in the 4 corners of the case back are pre-drilled for mounting to a plate, wall or post. Once mounted, the case front is secured to the case back through these same threaded holes.

Program Cable Connector

An RJ11 style connector is used to connect the cable from the PC programmer to the radio.

Program Button

A small, momentary pushbutton is used for field programming the OUTPOST Callbox.

Program Display

A single digit LED display is used for field programming the radio.

Battery Holder

The battery holder inside the case back is used for the installation of 6 D-cell alkaline batteries. Refer to the diagram below, or the labels beneath the cells, for correct installation of the batteries.

Battery Mating Connectors

Polarized, 2-pin mating connectors are used to connect the batteries to the radio circuit board.

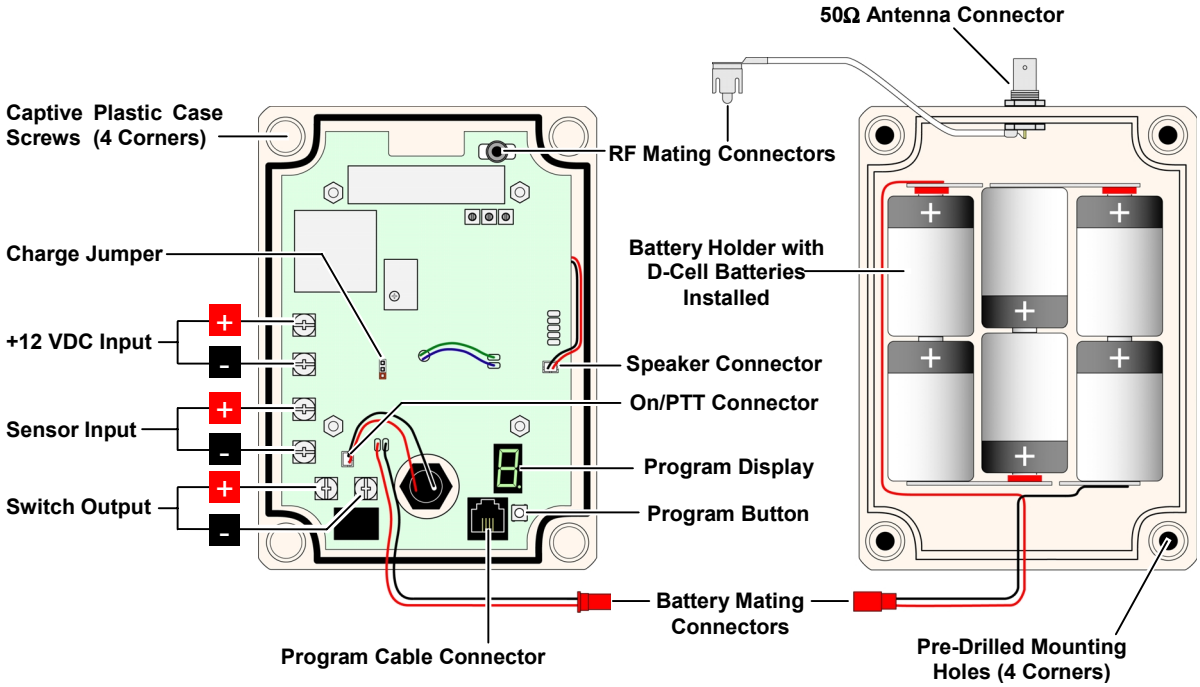

FIG-1: Callbox Assembly, Controls and Connectors

OUTPOST INSTALLATION INSTRUCTIONS

The OUTPOST can be mounted to virtually any surface with four (4) #6 panhead screws. Choose a type of screw thread and screw length which will hold firmly in the surface to which the unit will be mounted.

To MOUNT the OUTPOST: (Refer to FIG-1)

1. Loosen the (4) captive screws in the front corners of the case and separate the case front from the case back. These screws are captive to the housing; to prevent damaging them, DO NOT remove the screws from the housing.
2. Install 6 D-cell alkaline batteries into the battery holder. Refer to FIG-1, or the labels beneath the cells, for correct installation of the batteries.
3. If required, program the radio. Refer to the programming section of this manual for details.
4. Disconnect the RF mating connectors and the battery mating connectors. Set the case front containing the radio circuit board aside.
5. Insert a #6 panhead screw into each of the four (4) corner holes in the OUTPOST case back. Position the case back in the chosen installation location and secure it in place with the four screws.

CAUTION

Do not drill or penetrate the OUTPOST case with any additional holes. Use only the pre-drilled mounting holes.

6. Re-connect the RF mating connectors and the battery mating connectors between the case front and case back.
7. Fasten the case front to the case back with the four(4) captive screws. Do not over-tighten the plastic screws to prevent damage.
8. Insert, rotate and lock the antenna onto the antenna connector. Orient the antenna vertically.
9. If the OUTPOST is to be used outdoors, it is imperative that the antenna connector be sealed with sealing tape after the antenna has been installed. Use Grainger #2A-459, Radio Shack #278-1647, or equivalent. Refer to "Sealing the Antenna" instructions in this manual.
10. To install the message placard, align the center of the hole over the ON/PTT Button, and the mushroom-head fastener strips on the back of the placard with the strips on the front of the Outpost case. Press firmly to interlock the strips, snapping the panel into position.

Coverage

Depending on the unit location and installation, the OUTPOST can cover up to 1 mile. To increase range, use an external antenna that is mounted higher. See the RAM-1545 Magnet Mounted Antenna on page ii.

XT OUTPOST INSTALLATION INSTRUCTIONS

The XT OUTPOST can be mounted to virtually any surface with four (4) ¼" diameter fastners. Choose a type of screw thread and screw length which will hold firmly in the surface to which the unit will be mounted.

To MOUNT the XT OUTPOST: (Refer to FIG-3)

1. Remove the front faceplate from the XT Callbox. The faceplate is secured to the case with 4 vandal-resistant buttonhead, Torx screws. Use the T-25 Torx bit included with the radio to remove these screws.
2. Remove the "Mounting Bracket" kit secured to the inside of the XT Callbox case.
3. Loosen the (4) captive screws in the front corners of the internal Callbox case and separate the case front from the case back. These screws are captive to the housing; to prevent damaging them, DO NOT remove the screws from the housing.
4. Install 6 D-cell alkaline batteries into the battery holder. Refer to FIG-2, or the labels beneath the cells, for correct installation of the batteries.
5. If required, program the radio. Refer to the programming section of this manual for details.
6. Fasten the internal case front to the case back with the four(4) captive screws. Do not over-tighten the plastic screws to prevent damage.
7. Re-fasten the front faceplate to the radio with the 4 buttonhead Torx screws.
8. Install the 4 mounting brackets to the back of the XT Callbox case as shown in FIG-3 below with the #10-32 bolts provided. The mounting brackets can be installed vertically, as shown, or horizontally.
9. Position the XT Callbox in the chosen installation location and secure it in place with four screws through the mounting brackets.

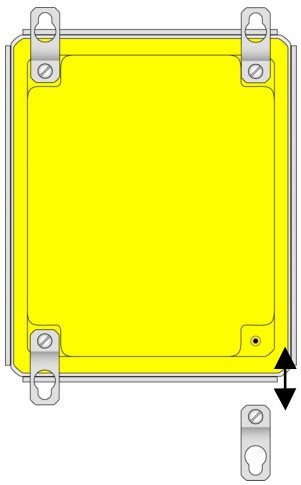

FIG-2: XT Callbox Mounting Brackets – Vertically Installed

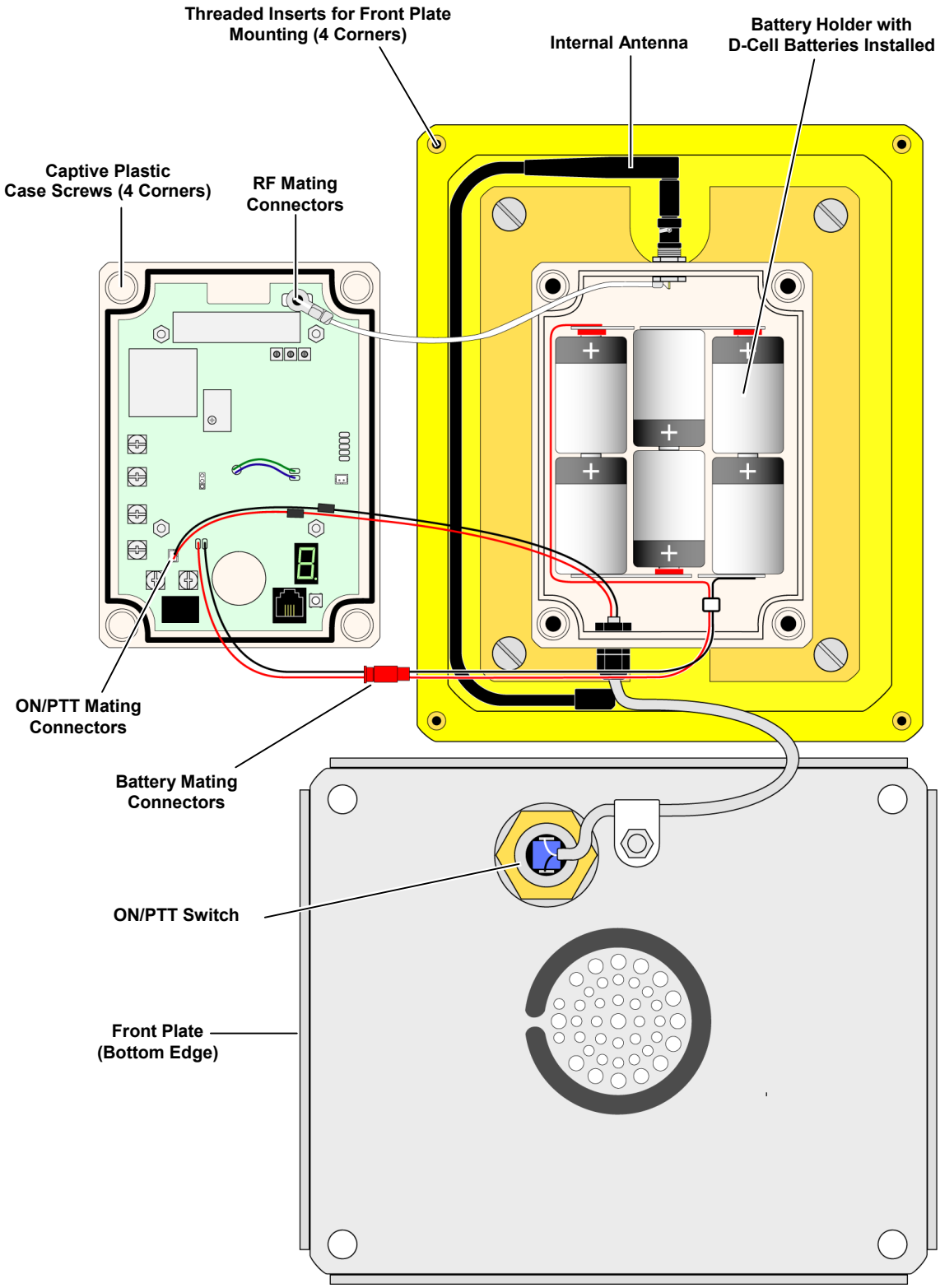

FIG 3: XT Callbox Assembly

XT GATE GUARD INSTALLATION INSTRUCTIONS

The XT OUTPOST GATE GUARD can be mounted to virtually any surface with four (4) #6 panhead screws. Choose a type of screw thread and screw length which will hold firmly in the surface to which the unit will be mounted.

To MOUNT the XT OUTPOST GATE GUARD: (Refer to FIG-5)

1. Remove the front faceplate from the XT Callbox. The faceplate is secured to the case with 4 vandal-resistant buttonhead, Torx screws. Use the T-25 Torx bit included with the radio to remove these screws.
2. Remove the "Mounting Bracket" kit secured to the inside of the XT Callbox case.

Due to the wide variety of installation possibilities, RIITRON does not provide the cables or hardware required to bring external connections into the XT Callbox. When selecting your cable hardware be sure it will adequately seal the cable to the case.

3. Carefully study the internal construction of the XT Callbox and determine the location on the outside case where the external supply and Gate Guard hook-up will be brought in. Consider clearance with your desired hardware.
4. Remove the 4 flathead screws securing the internal mounting plate and remove entire internal case assembly. The front faceplate will be attached to the internal case assembly, handle with care.
5. Drill the hole in the XT Callbox case required for your cable installation.
6. Install the 4 mounting brackets to the back of the XT Callbox case shown in FIG-2. The mounting brackets can be installed vertically, as shown, or horizontally.
7. Thread your external hookup cable through the hole with approximately 6 inches of cable inside the case. Your external cable will be connected to the XT Callbox 6-conductor interface cable with wirenuts, dress your external wires accordingly. With your selected hardware, secure and seal the cable to the XT Callbox case.
8. Position the XT Callbox case in the chosen installation location and secure it in place with four screws through the mounting brackets.
9. If programming is required, loosen the (4) captive screws in the front corners of the internal Callbox case and separate the case front from the case back. These screws are captive to the housing; to prevent damaging them, DO NOT remove the screws from the housing.
10. Program the radio, if required. Refer to the programming section of this manual for details. To program the radio you must first apply +12VDC external power, or install a charged back-up battery. Refer to FIG-1 for hookup of an external +12VDC supply.
11. If rechargeable NiCd batteries are used for battery backup the "Charge Jumper" must be placed into the "charge" position as shown.

! ! CAUTION ! !

If rechargeable batteries are NOT used for battery backup, be sure the "Charge Jumper" is NOT in the "charge position. Charging alkaline batteries will damage the cells and reduce battery life!

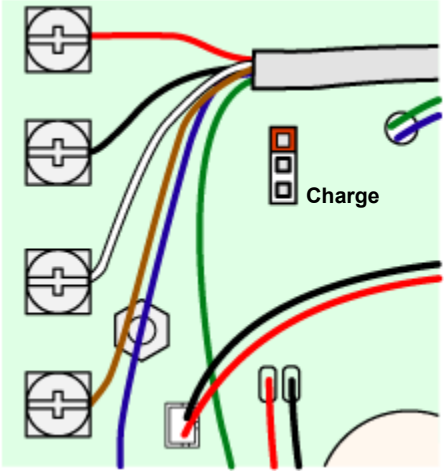

FIG-4: Charge Jumper in Charge Position

12. Fasten the internal case front to the case back with the four(4) captive screws. Do not over-tighten the plastic screws to prevent damage.
13. Secure the internal case assembly to the XT Callbox with the 4 flathead screws through the internal mounting plate. Refer to FIG-5 for correct orientation and location of the antenna and cables. The front faceplate is attached to the internal case assembly, handle with care.
14. Re-fasten the front faceplate to the radio with the 4 buttonhead Torx screws.

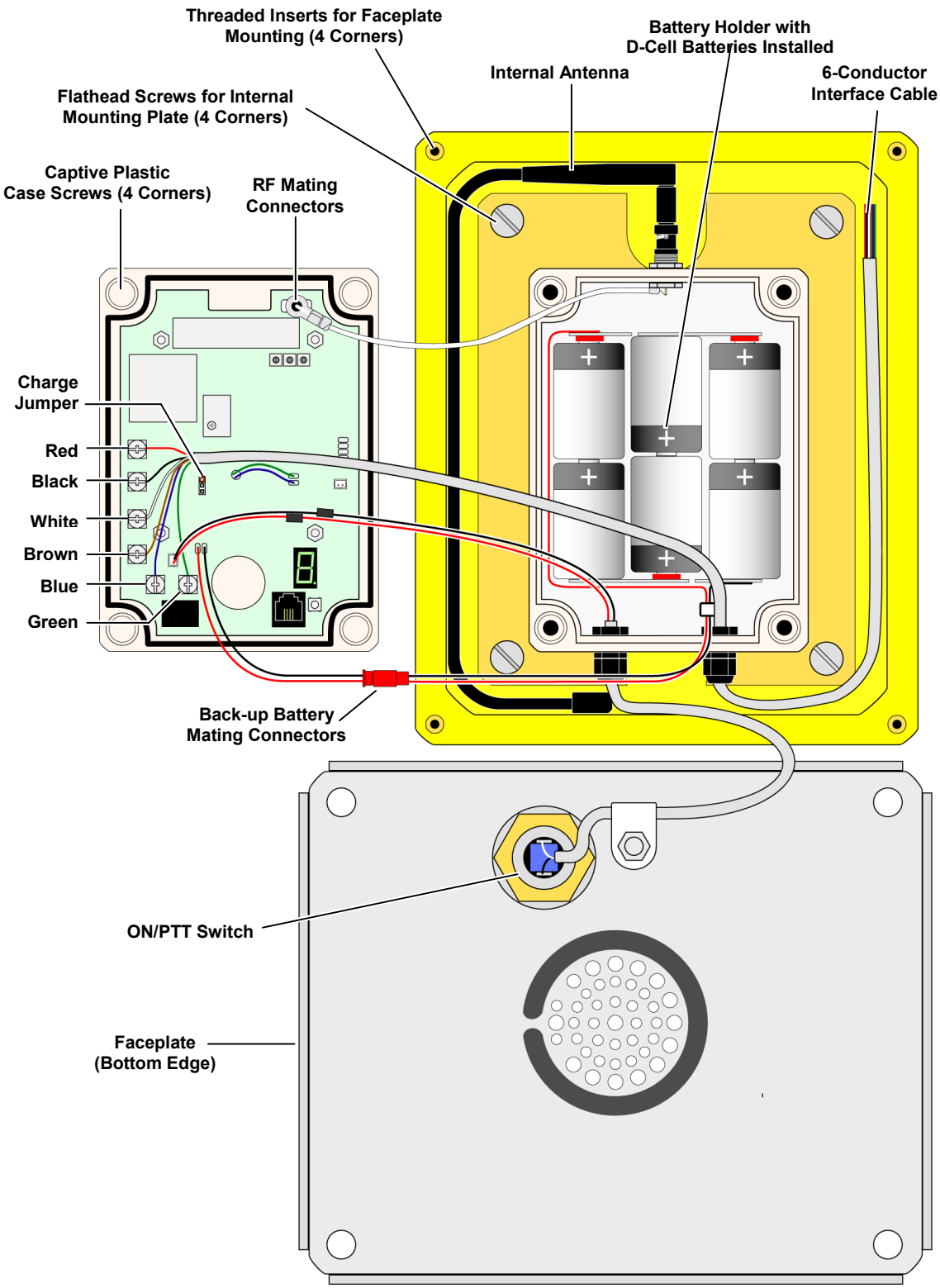

FIG 5: XT Callbox Gate Guard Assembly with Battery Backup

HOW TO READOUT CURRENT RADIO PROGRAMMING

1. Loosen the (4) captive screws in the front corners of the case. These screws are captive to the housing; to prevent damaging them, DO NOT remove the screws from the housing.

2. Separate the case front from the case back, leaving the battery connected to the radio. Make sure the unit has batteries installed. **NOTE:** The voltage of the batteries must be greater than 6 VDC to program properly.

3. Press and release the ON/TRANSMIT button on the front of the Callbox to turn the radio on.

4. Press and release the Program button (See FIG-1 on page 3 for location). The radio will begin to display a series of four digits; with each digit separated by a hyphen.

5. Write down the four digits. The first two digits indicate the frequency code and the last two digits the tone code; **see Table 1 and Table 2 on pages 12 and 13.** In this example an RQX-456 is programmed to operate on the "Brown Dot" frequency of 464.500 MHz (Frequency code "04") with 100.0 Hz tone (Tone code "12").

FREQUENCY CODE TONE CODE

6. If a 5th digit is displayed, the channel has been programmed for DQC and the last three digits indicate the DQC code; **see Table 3 on page 13.** In this example an RQX-456 was programmed to operate on the "Brown Dot" frequency of 464.500 MHz (Frequency code "04") with a DQC code of "723").

FREQUENCY CODE DQC CODE

7. If more than 5 digits are displayed, the radio has been programmed for 2-Tone Paging Decode. The frequency and tone codes will be displayed, followed by a "C", then the radio will display the 2-Tone paging code; **see Table 4 on page 13.** In this example an RQX-456 was programmed to operate on the "Brown Dot" frequency of 464.500 MHz (Frequency code "04") with 100.0 Hz tone (Tone code "12") and 2-tone paging decode frequencies of 330.5 Hz and 569.1 Hz (2-Tone code "91")

FREQUENCY CODE TONE CODE PAGING CODE

8. If the channel is PC-programmed with any frequency or tone not listed in Table 1, Table 2 or Table 3 on pages 12 and 13, the radio will sound the error tone on contents read out and display an "E".

9. Normal radio operation resumes after the programming information has been displayed.

HOW TO FIELD PROGRAM FREQUENCY AND TONE CODES

To match other radios, the owner can select Frequency, Tone and DQC Codes from Table 1, Table 2 and Table 3 on pages 12 and 13. In our example we will program an RQX-456 to operate on the "Brown Dot" frequency of 464.500 MHz with 100.0 Hz tone.

04	1.	Refer to Table 1 on page 12 to determine the two-digit frequency code and write it down.
12	2.	Refer to Table 2 on page 13 to determine the two-digit tone code for 100.0 Hz and write it down.
	3.	Loosen the (4) captive screws in the front corners of the case. These screws are captive to the housing; to prevent damaging them, DO NOT remove the screws from the housing.
	4.	Separate the case front from the case back, leaving the battery connected to the radio. Make sure the unit has batteries installed. **NOTE:** The voltage of the batteries must be greater than 6 VDC to program properly.
	5.	Press and release the ON/TRANSMIT button on the front of the unit to turn the radio on.
	6.	Press and hold the Program Button (See FIG-1 on page 3 for location). A "P" will appear on the program display as you enter program mode and the radio will start beep rapidly.
	7.	Release the program button after the beeping has stopped. The radio will display a series of six characters for Radio Identification, with each character separated by a hyphen. The 1st two characters indicate the model number, the 3rd and 4th characters indicate the radio type, and the 5th and 6th characters indicate the firmware revision. **MODEL NUMBER** **RADIO TYPE** **FIRMWARE REVISION**
	8.	After the Radio Identification has been displayed the radio will emit a triple beep indicating that the radio is in program mode.
FREQUENCY CODE	9.	Enter the 1st digit of the frequency code by clicking the PTT button until the program display shows the desired number. Pause—the radio will sound a low tone and show a hyphen across the center of the display to indicate that it is ready to accept the next digit.
	10.	Enter the 2nd digit of the frequency code by clicking the PTT button until the program display shows the desired number. Pause—the radio sounds a low tone and will show a hyphen across the center of the display to indicate that it is ready to accept the next digit.
TONE CODE	11.	Enter the 1st digit of the tone code (or 1st digit of the DQC code) by clicking the PTT button until the program display shows the desired number. Pause—the radio sounds a low tone and will show a hyphen across the center of the display to indicate that it is ready to accept the next digit.
	12.	Enter the 2nd digit of the tone code (or 2nd digit of the DQC code) by clicking the PTT button until the program display shows the desired number. Pause—the radio sounds a low tone and will show a hyphen across the center of the display to indicate that it is ready to accept the next digit.
	13.	**FOR DQC CODES ONLY** – Enter the 3rd digit of the DQC code by clicking the PTT button until the program display shows the desired number. Pause—the radio sounds a low tone and will show a hyphen across the center of the display to indicate that it is ready to accept the next digit.
	14.	Press and release the ON/TRANSMIT button to save your programming. A triple beep will sound to indicate that programming was successful and the radio will turn off. NOTE: An error tone will sound if you attempt to save an incorrect code, an "E" will appear on the display and the radio will turn off. Check the digits you are attempting to enter, then start over.
	15.	Turn the radio back on for normal operation.

HOW TO FIELD PROGRAM 2-TONE DECODE

For special applications, it is desirable to program the Callbox for 2-Tone decode operation. The user is able to field program the radio for one of the 9 pre-determined tone pairs specified in Table 4 on page 13. These tone pairs correspond to field programmable 2-Tone encode codes available in other RITRON portable and base radios. In our example we will program an RQX-456 to operate with 2-Tone decode frequencies of 389.0 and 669.9 Hz.

NOTE: Field programming frequency and tone codes will remove all 2-Tone programming. If 2-Tone operation is required, the 2-tone code must be re-programmed after field programming of the frequency and tone codes.

94	1.	Refer to Table 4 on page 13 to determine the two-digit code for 2-tone decode on 389.0 and 669.9 Hz and write it down.
	2.	Loosen the (4) captive screws in the front corners of the case. These screws are captive to the housing; to prevent damaging them, DO NOT remove the screws from the housing.
	3.	Separate the case front from the case back, leaving the battery connected to the radio. Make sure the unit has batteries installed. **NOTE:** The voltage of the batteries must be greater than 6 VDC to program properly.
	4.	Press and release the ON/TRANSMIT button on the front of the unit to turn the radio on.
	5.	Press and hold the Program Button (See FIG-1 on page 3 for location). A "P" will appear on the program display as you enter program mode and the radio will start beep rapidly.
	6.	Release the program button after the beeping has stopped. The radio will display a series of six characters for Radio Identification, with each character separated by a hyphen. The 1st two characters indicate the model number, the 3rd and 4th characters indicate the radio type, and the 5th and 6th characters indicate the firmware revision. **MODEL NUMBER** **RADIO TYPE** **FIRMWARE REVISION**
	7.	After the Radio Identification has been displayed the radio will emit a triple beep indicating that the radio is in program mode.
2-TONE CODE	8.	Enter the 1st digit of the 2-Tone code by clicking the PTT button until the program display shows the desired number. Pause—the radio will sound a low tone and show a hyphen across the center of the display to indicate that it is ready to accept the next digit.
	9.	Enter the 2nd digit of the 2-Tone code by clicking the PTT button until the program display shows the desired number. Pause—the radio sounds a low tone and will show a hyphen across the center of the display to indicate that it is ready to accept the next digit.
	10.	Press and release the ON/TRANSMIT button to save your programming. A triple beep will sound to indicate that programming was successful and the radio will turn off. NOTE: An error tone will sound if you attempt to save an incorrect code, an "E" will appear on the display and the radio will turn off. Check the digits you are attempting to enter, then start over.
	11.	Turn the radio back on for normal operation.

HOW TO FIELD PROGRAM RADIO FEATURES

The OUTPOST Callbox can be field programmed for a number of features that include companding, Gate Guard, and speaker volume level. Refer to Table 5 on page 13 for the single digit codes available for field programming. In our example we will program an RQX-456 for Gate Guard operation.

NOTE: Field programming frequency and tone codes will turn companding and Gate Guard OFF. If companding or Gate Guard operation is required, the single-digit Radio Feature code must be re-programmed after field programming of the frequency and tone codes.

5	1.	Refer to Table 5 on page 13 to determine the single-digit code used to enable Gate Guard.
	2.	Loosen the (4) captive screws in the front corners of the case. These screws are captive to the housing; to prevent damaging them, DO NOT remove the screws from the housing.
	3.	Separate the case front from the case back, leaving the battery connected to the radio. Make sure the unit has batteries installed. **NOTE:** The voltage of the batteries must be greater than 6 VDC to program properly.
	4.	Press and release the ON/TRANSMIT button on the front of the unit to turn the radio on.
	5.	Press and hold the Program Button (See FIG-1 on page 3 for location). A "P" will appear on the program display as you enter program mode and the radio will start beep rapidly.
	6.	Release the program button after the beeping has stopped. The radio will display a series of six characters for Radio Identification, with each character separated by a hyphen. The 1st two characters indicate the model number, the 3rd and 4th characters indicate the radio type, and the 5th and 6th characters indicate the firmware revision. **MODEL NUMBER** **RADIO TYPE** **FIRMWARE REVISION**
	7.	After the Radio Identification has been displayed the radio will emit a triple beep indicating that the radio is in program mode.
	8.	Enter the single-digit code by clicking the PTT button until the program display shows the desired number. Pause—the radio will sound a low tone and show a hyphen across the center of the display to indicate that it is ready to accept the next digit.
	9.	Press and release the ON/TRANSMIT button to save your programming. A triple beep will sound to indicate that programming was successful and the radio will turn off. NOTE: An error tone will sound if you attempt to save an incorrect code, an "E" will appear on the display and the radio will turn off. Check the digits you are attempting to enter, then start over.
	10.	Turn the radio back on for normal operation.

TABLE 1: PROGRAMMABLE FREQUENCY CODES

UHF Business Band			
Code	Frequency	Color Dot	Bandwidth
01	467.7625	J	25
02	467.8125	K	25
03	464.5500	Yellow Dot	25
04	464.5000	Brown Dot	25
05	467.8500	Silver Star	25
06	467.8750	Gold Star	25
07	467.9000	Red Star	25
08	467.9250	Blue Star	25
09	469.2625		25
10	462.5750	White Dot	25
11	462.6250	Black Dot	25
12	462.6750	Orange Dot	25
13	464.3250		25
14	464.8250		25
15	469.5000		25
16	469.5500		25
17	463.2625		25
18	464.9125		25
19	464.6000		25
20	464.7000		25
21	462.7250		25
22	464.5000	Brown Dot	12.5
23	464.5500	Yellow Dot	12.5
24	467.7625	J	12.5
25	467.8125	K	12.5
26	467.8500	Silver Star	12.5
27	467.8750	Gold Star	12.5
28	467.9000	Red Star	12.5
29	467.9250	Blue Star	12.5
30	461.0375		12.5
31	461.0625		12.5
32	461.0875		12.5
33	461.1125		12.5
34	461.1375		12.5
35	461.1625		12.5
36	461.1875		12.5
37	461.2125		12.5
38	461.2375		12.5
39	461.2625		12.5
40	461.2875		12.5
41	461.3125		12.5
42	461.3375		12.5
43	461.3625		12.5
44	462.7625		12.5
45	462.7875		12.5
46	462.8125		12.5
47	462.8375		12.5
48	462.8625		12.5
49	462.8875		12.5
50	462.9125		12.5
51	464.4875		12.5
52	464.5125		12.5
53	464.5375		12.5
54	464.5625		12.5
55	466.0375		12.5
56	466.0625		12.5
57	466.0875		12.5
58	466.1125		12.5
59	466.1375		12.5
60	466.1625		12.5
61	466.1875		12.5
62	466.2125		12.5

UHF Business Band (continued)			
Code	Frequency	Color Dot	Bandwidth
63	466.2375		12.5
64	466.2625		12.5
65	466.2875		12.5
66	466.3125		12.5
67	466.3375		12.5
68	466.3625		12.5
69	467.7875		12.5
70	467.8375		12.5
71	467.8625		12.5
72	467.8875		12.5
73	467.9125		12.5
74	469.4875		12.5
75	469.5125		12.5
76	469.5375		12.5
77	469.5625		12.5
00	**DELETE CODE***		

UHF Business Band – Canada Models			
Code	Frequency	Color Dot	Bandwidth
01	458.6625		25
02	469.2625		25
00	**DELETE CODE***		

VHF Business Band			
Code	Frequency	Color Dot	Bandwidth
03	151.6250	Red Dot	25
04	151.9550	Purple Dot	25
05	151.9250		25
06	154.5400		25
07	154.5150		25
08	154.6550		25
09	151.6850		25
10	151.7150		25
11	151.7750		25
12	151.8050		25
13	151.8350		25
14	151.8950		25
15	154.4900		25
16	151.6550		25
17	151.7450		25
18	151.8650		25
24	151.7000		12.5
25	151.7600		12.5
26	152.7000		25
00	**DELETE CODE ***		

VHF MURS **			
Code	Frequency	Color Dot	Bandwidth
01	154.6000	Green Dot	25
02	154.5700	Blue Dot	25
19	151.8200	MURS	12.5
20	151.8800	MURS	12.5
21	151.9400	MURS	12.5
22	154.6000	MURS	12.5
23	154.5700	MURS	12.5
00	**DELETE CODE ***		

TABLE 2: PROGRAMMABLE QC TONE CODES

Code	Frequency	Code	Frequency	Code	Frequency	Code	Frequency
01	67.0	14	107.2	27	167.9	40	159.8
02	71.9	15	110.9	28	173.8	41	165.5
03	74.4	16	114.8	29	179.9	42	171.3
04	77.0	17	118.8	30	186.2	43	177.3
05	79.7	18	123.0	31	192.8	44	No Tone
06	82.5	19	127.3	32	203.5	45	183.5
07	85.4	20	131.8	33	210.7	46	189.9
08	88.5	21	136.5	34	218.1	47	196.6
09	91.5	22	141.3	35	225.7	48	199.5
10	94.8	23	146.2	36	233.6	49	206.5
11	97.4	24	151.4	37	241.8	50	229.1
12	100.0	25	156.7	38	250.3	51	254.1
13	103.5	26	162.2	39	69.4	**00**	**Delete**

TABLE 3: PROGRAMMABLE DQC CODES

Code	Code	Code	Code	Code	Code	Code	Code
023	072	152	244	331	423	532	662
025	073	155	245	343	431	546	664
026	074	156	251	346	432	565	703
031	114	162	261	351	445	606	712
032	115	165	263	364	464	612	723
043	116	172	265	365	465	624	731
047	125	174	271	371	466	627	732
051	131	205	306	411	503	631	734
054	132	223	311	412	506	632	743
065	134	226	315	413	516	654	754
071	143	243					

TABLE 4: PROGRAMMABLE 2-TONE CODES

Code	Tone 1	Tone 2
91	330.5	569.1
92	349.0	600.9
93	368.5	634.5
94	389.0	669.9
95	410.8	707.3
96	433.7	746.8
97	457.9	788.5
98	483.5	832.5
99	330.5	600.9

TABLE 5: PROGRAMMABLE FEATURES

Code	Feature
1	Companding ON
2	Companding OFF
3	Volume Level - Medium
4	Volume Level - High
5	Gate Guard ON
6	Gate Guard OFF
7	
8	
9	

NOTE: Companding will compress transmit audio before sending it, and expand receive audio before it is heard on the speaker to reduce the background noise common in radio communications. Companding is not recommended unless all radios in the system are companded.

FIELD PROGRAMMING GATE GUARD

The XT OUTPOST can be field programmed for basic Gate Guard operation, or PC programmed to suit your unique requirements.

To field program the Gate Guard:

1. Program the frequency and tone codes per the "How to Field Program Frequency and Tone Codes" instructions on page 9.
2. Program the 2-Tone code per the "How to Field Program 2-Tone Decode" instructions on page 10.
3. Program the Callbox for Gate Guard operation per the "How to Field Program Radio Features" instructions on page 11.

The XT OUTPOST Callbox will now operate in Gate Guard mode as follows:

- The Callbox will be in "Wake-up" mode. The ON/PTT button must 1st be pressed as described in "Operating the OUTPOST Callbox" section on page 2 before normal two-way communications can be established.
- If the Callbox does not send or receive a signal for more than 10 seconds the Callbox will automatically turn off. The ON/PTT button must be pressed to turn the Callbox back on.
- When the Callbox receives the correct 2-Tone signal the Callbox Switch Output will momentarily close for 1 second. The Callbox will automatically transmit a confirmation tone after the 2-tone has been decoded.

OPTIONAL GATE GUARD PROGRAMMING

The XT OUTPOST can be PC programmed to customize Gate Guard operation.

Intercom (Always On) will leave the Callbox tuned on at all times, allowing Gate Guard operation even if there is no one at the Callbox. The higher current requirements of Intercom mode make it undesirable in battery powered installations.

Battery Saver can be used to reduce battery drain when Intercom (Always On) operation is required on a battery powered installation. With Battery Saver activated, the Callbox will periodically "wake-up" and listen for a received signal before returning to a low current "sleep" state. The time between "wake-up' states can be PC programmed between 1-255 seconds. A longer time between "Wake-up" states will result in increased battery life.

Ring Tone will sound an alert tone on the Callbox speaker, similar to a telephone ring tone, whenever 2-tone has been successfully decoded. This will alert the Callbox user that the gate is being opened or closed.

Inactivity Timer is set from the factory for 10 seconds, but can be PC programmed for 1-255 seconds. A shorter inactivity time will result in increased battery life. In standard "Wake-Up" operation a longer inactivity timer will allow more time for a response before the Callbox turns off.

Gate Guard Latch operation allows programming of separate ON and OFF 2-tone codes. The Outpost will close the Switch Output upon receiving the ON code, and open the Switch Output upon receiving the OFF code.

If the Gate Guard Latch option is used with an ON code only, the Switch Output will automatically turn OFF when the radio:

1. is turned off as a result of the Inactivity Timer in "Wake-Up" mode or,
2. goes to the low current "sleep" state in "Intercom (Always-On)" mode with battery saver enabled.

When reading out the radio programming as described in the "How to Readout Current Radio Programming" section, the ON code will be displayed.

Sensor Output can be programmed to detect a logic level and transmit an Alert tone when a change in logic level is detected. Separate alert tones are used for OPEN (logic level high) and CLOSED (logic level low).

Battery Back-Up Alert is used in installations with an external 12 VDC power supply and internal battery back-up. The OUTPOST can be programmed to send an alert tone at the end of each transmission when the unit is operating on the back-up battery.

Busy Channel TX Inhibit will not allow you to transmit when another user is already transmitting on your radio frequency without your tone. The radio will beep a series of long, low tones while the ON/PTT button is held down (like a busy signal).

INTERCOM (ALWAYS-ON) PROGRAMMING

The XT OUTPOST can be PC programmed to operate as a two-way intercom. When this feature is activated the automatic shut-off is disabled and the radio will remain on in a "stand-by" mode, allowing it to receive a call from another radio at any time. The higher current requirements of Intercom operation make it undesirable in battery powered installations.

Intercom (Always On) must be set for the Callbox to remain tuned on at all times.

Battery Saver can be used to reduce battery drain on a battery powered installation. With Battery Saver activated, the Callbox will periodically "wake-up" and listen for a received signal before returning to a low current "sleep" state. The time between "wake-up' states can be PC programmed between 1-255 seconds. A longer time between "Wake-up" states will result in increased battery life.

2-Tone Decode allows selective calling to a Callbox in a radio system where there is more than one Callbox. When the Callbox is programmed for 2-tone decode in "Intercom (Always-On)" mode it will sound an alert tone on the Callbox speaker, similar to a telephone ring tone, whenever 2-tone has been successfully decoded. This will alert any users in the immediate area that there is an incoming call on the Callbox.

Ring Tone must be set to sound the alert tone on the Callbox speaker when 2-tone is successfully decoded.

Monitor can be set when used with 2-Tone decode to allow the Callbox to hear all radio traffic on the channel. If Monitor is not set, the Callbox will only hear a broadcast after it has successfully decoded the correct 2-tone code. Normal conversation can follow after the 2-tone code is decoded and the radio will automatically reset back to 2-tone decode after 10 seconds of inactivity.

Busy Channel TX Inhibit will not allow you to transmit when another user is already transmitting on your radio frequency without your tone. The radio will beep a series of long, low tones while the ON/PTT button is held down (like a busy signal).

HOW TO SEAL THE ANTENNA

If the OUTPOST Callbox is to be used outdoors it is imperative that the entire antenna connection be sealed with seal tape to provide proper operation and prevent voiding warranty.

Seal tape can be purchased at most Industrial Supply Stores, Harware and Home Center Stores, or Electronic Supply Stores.

Regarless of the antenna used, it is always best to weatherproof the antenna connection using seal tape.

NOTICE

Failure to follow these instructions will cause damage to the product, prevent proper sealing of the enclose and will **void the Manufacturers Warranty.**

Applying Seal Tape:

1. Attach the antenna to the 50Ω BNC connector on the OUTPOST Callbox enclosure.
2. Begin wrapping seal tape at the base of the antenna connector such that it is sealed to the enclosure top.
3. Overlap the seal tape as you tightly wrap upward around the connector and antenna. Continue to overlap seal tape around the connector base, past the articulated portion of the antenna and several inches up the thin, shiny section of the antenna.

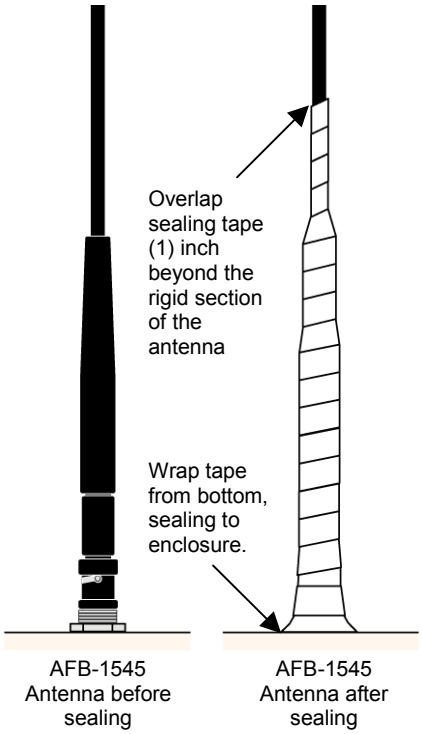

EXPOSURE TO RADIO FREQUENCY ENERGY

RQX-456: This product generates radio frequency (RF) energy when the ON/PTT button on the front of the unit is depressed. This product has been evaluated for compliance with the maximum permissible exposure limits for RF energy at the maximum power rating of the unit when using antennas available from RITRON.

For both the AFB-1545 and RAM-1545 antennas, at the 20 cm (7.9 inches) minimum expected separation distance and greater, the maximum RF exposure is well below the General Population/Uncontrolled limits. Antennas other than those available from RITRON have not been tested for compliance and may or may not meet the exposure limits at the distances given. Higher gain antennas are capable of generating higher fields in the strongest part of their field and would, therefore, require a greater separation from the antenna. This product is not to be used by the general public in an uncontrolled environment unless compliance with the Uncontrolled/General Population limits for RF exposure can be assured.

To limit exposure to RF energy to levels below the limit, please observe the following:

- Use only the antenna(s) available from RITRON for these models. **DO NOT** operate the radio without an antenna.
- Keep talk times as short and infrequent as possible. **DO NOT** depress the ON/PTT button when not actually wishing to transmit. These radios are equipped with an internal timer to limit continuous transmit times.
- When transmitting, make certain that the distance limits for the particular model in use are observed.
- **DO NOT** allow children to operate the radio.

When used as directed, this series of radios is designed to comply with the FCC's RF exposure limits for "Uncontrolled/General Population". In addition, they are designed to comply with the following Standards and Guidelines**:**

- FCC OET Bulletin 65, Edition 97-01, Supplement C, Evaluating Compliance with FCC Guidelines for Human Exposure to Radio Frequency Electromagnetic Fields.
- American National Standards Institute (C95.1-1992), IEEE Standard for Safety Levels with Respect to Human Exposure to Radio Frequency Electromagnetic Fields, 3 kHz to 300 GHz.
- American National Standards Institute (C95.3-1992), IEEE Recommended Practice for the Measurement of Potentially Hazardous Electromagnetic Fields-RF and Microwave.

FCC LICENSE REQUIRED

Licensing

The FCC requires the owners of the radios to obtain a station license before using them.

The station licensee is responsible for ensuring that transmitter power, frequency and deviation are within the limits specified by the station license. The station licensee is also responsible for proper operation and maintenance of the radio equipment. This includes checking the transmitter frequency and deviation periodically, using appropriate methods.

To get an FCC license for VHF or UHF frequencies, submit FCC application Form 600 as indicated in the block at right. Your Ritron dealer can help you with this process.

Safety Standards

The FCC (with its action in General Docket 79-144, March 13, 1985) has adopted a safety standard for human exposure to radio frequency electromagnetic energy emitted by FCC regulated equipment. Ritron observes these guidelines and recommends that you do also:

- DO NOT hold the radio so that the antenna is very close to or touching exposed parts of the body, especially the face or eyes, while transmitting. Keep the radio vertical, four inches away while talking into the front panel.
- DO NOT press the Push-To-Talk except when you intend to transmit.
- DO NOT operate radio equipment near electrical blasting caps or in an explosive atmosphere.
- DO NOT allow children to play with any radio equipment that contains a transmitting device.
- Repair of Ritron products should be performed only by Ritron authorized personnel.

Service

Federal law prohibits you from making any internal adjustments to the transmitter, and/ or from changing transmit frequencies unless you are specifically designated by the licensee.

If your radio equipment fails to operate properly, or you wish to have the radio programmed, contact your authorized dealer or Ritron.

RITRON, INC., Repair Department
505 West Carmel Drive
Carmel, IN 46032 USA
Phone: 317-846-1201
FAX: 317-846-4978

How to Obtain an FCC Radio License

Because your Ritron radio operates on Private Land Mobile frequencies, it is subject to the Rules and Regulations of the FCC, which requires all operators of these frequencies to obtain a station license before

operating their equipment. Make application for your FCC license on FCC Forms 600 and 159.

To have forms and instructions faxed to you by the FCC, call the FCC Fax-On-Demand system at **202-418-0177** from your fax machine; request Document 000600 & Form 159.

To have Document 000600 & Form 159 mailed to you, call the FCC Forms Hotline at **800-418-FORM (800-418-3676).**

For help with questions concerning the license application, contact the FCC at **888-CALL-FCC (888-225-5322).**

You must decide which radio frequency(ies) you can operate on before filling out your application.

For help determining your frequencies, call Ritron at **800-USA-1-USA (800-872-1872).**

RITRON, INC. LIMITED WARRANTY

WHAT THIS WARRANTY COVERS:

RITRON, INC. ("RITRON") provides the following warranty against defects in materials and/or workmanship in **RITRON Radios and Accessories** under normal use and service during the applicable warranty period (as stated below). "Accessories" means antennas, holsters, chargers, earphones, speaker/microphones and items contained in the programming and programming/service kits.

WHAT IS COVERED	FOR HOW LONG	WHAT RITRON WILL DO
OUTPOST Callboxes	1 year*	During the first year after date of purchase, RITRON will repair or replace the defective product, at RITRON's option, parts and labor included at no charge.
Accessories	90 days*	**After date of purchase*

WHAT THIS WARRANTY DOES NOT COVER:

- Any technical information provided with the covered product or any other RITRON products;
- Installation, maintenance or service of the product, unless this is covered by a separate written agreement with RITRON;
- Any products not furnished by RITRON which are attached or used with the covered product, or defects or damage from the use of the covered product with equipment that is not covered (such as defects or damage from the charging or use of batteries other than with covered product);
- Defects or damage, including broken antennas, resulting from:
  - misuse, abuse, improper maintenance, alteration, modification, neglect, accident or act of God,
  - the use of covered products other than in normal and customary manner or,
  - improper testing or installation;
- Defects or damages from unauthorized disassembly, repair or modification, or where unauthorized disassembly, repair or modification prevents inspection and testing necessary to validate warranty claims;
- Defects or damages in which the serial number has been removed, altered or defaced.
- Batteries if any of the seals are not intact.

IMPORTANT: This warranty sets forth the full extent of RITRON's express responsibilities regarding the covered products, and is given in lieu of all other express warranties. What RITRON has agreed to do above is your sole and exclusive remedy. No person is authorized to make any other warranty to you on behalf of RITRON. Warranties implied by state law, such as implied warranties of merchantability and fitness for a particular purpose, are limited to the duration of this limited warranty as it applies to the covered product. Incidental and consequential damages are not recoverable under this warranty (this includes loss of use or time, inconvenience, business interruption, commercial loss, lost profits or savings). Some states do not allow the exclusion or limitation of incidental or consequential damages, or limitation on how long an implied warranty lasts, so the above limitations or exclusions may not apply to you. Because each covered product system is unique, RITRON disclaims liability for range, coverage, or operation of the system as a whole under this warranty.

WHO IS COVERED BY THIS WARRANTY: This warranty is given only to the purchaser or lessee of covered products when acquired for use, not resale. This warranty is not assignable or transferable.

HOW TO GET WARRANTY SERVICE: To receive warranty service, you must deliver or send the defective product, delivery costs and insurance prepaid, within the applicable warranty period, to **RITRON, INC., 505 West Carmel Drive, Carmel, Indiana 46032, Attention: Warranty Department.** Please point out the nature of the defect in as much detail as you can. You must retain your sales or lease receipt (or other written evidence of the date of purchase) and deliver it along with the product. If RITRON chooses to repair or replace a defective product, RITRON may replace the product or any part or component with reconditioned product, parts or components. Replacements are covered for the balance of the original applicable warranty period. All replaced covered products, parts or components become RITRON's property.

RIGHTS TO SOFTWARE RETAINED : Title and all rights or licenses to patents, copyrights, trademarks and trade secrets in any RITRON software contained in covered products are and shall remain in RITRON. RITRON nevertheless grants you a limited non-exclusive, transferable right to use the RITRON software only in conjunction with covered products. No other license or right to the RITRON software is granted or permitted.

YOUR RIGHTS UNDER STATE LAW: This warranty gives you specific legal rights, and you may also have other rights which vary from state to state.

WHERE THIS WARRANTY IS VALID: This warranty is valid only within the United States, the District of Columbia and Puerto Rico.