Pioneer

English

# AVH-W4400NEX

DVD RDS AV RECEIVER

HD Radio®

This HD Radio receiver enables:

PSD

HD2/HD3

Digital Sound

Artist Experience

SiriusXM READY

pandora®

**Important (Serial number)**

The serial number is located on the bottom of this unit. For your own security and convenience, be sure to record this number on the enclosed warranty card.

Operation Manual

# Contents

Thank you for buying this Pioneer product.
Please read through these instructions so you will know how to operate your model properly. After you have finished reading the instructions, keep this document in a safe place for future reference.

**Important**

The screen shown in the examples may differ from actual screens, which may be changed without notice for performance and function improvements.


## Precaution ..... 3

Information to user ..... 3
Important safety information ..... 4
To ensure safe driving ..... 5
When using a display connected to V OUT ..... 5
To avoid battery exhaustion ..... 5
Rear view camera ..... 5
Handling the SD card slot ..... 5
Handling the USB connector ..... 6
Failure to operate ..... 6
Visit our website ..... 6
Protecting the LCD panel and screen ..... 6
Notes on internal memory ..... 6
About this manual ..... 6

## Parts and controls ..... 7

Main unit ..... 7
Remote Control ..... 7
Protecting your product against theft ..... 8

## Basic operation ..... 9

Notes on using the LCD panel ..... 9
Adjusting the LCD panel angle ..... 9
Resetting the microprocessor ..... 9
Preparing the remote control ..... 10
Starting up the unit ..... 10
Using the touch panel ..... 11
Top menu screen ..... 12

## Bluetooth ..... 13

Bluetooth connection ..... 13
Bluetooth settings ..... 13
Hands-free phoning ..... 14
Bluetooth audio ..... 16

## Wi-Fi ..... 18

Wi-Fi connection ..... 18
Wi-Fi settings ..... 18

## AV source ..... 19

Supported AV source ..... 19
Displaying the AV operation screen ..... 19
Selecting a source ..... 19
Changing the display order of source ..... 19
Adjusting the range of favorite source icons area 20

## Setup for iPod/iPhone or smartphone ..... 20

iPod/iPhone ..... 20
Smartphone (Android™ device) ..... 21

## HD Radio™ Technology ... 21

About HD Radio stations ..... 21
Starting procedure ..... 22
Basic operation ..... 22
Storing the strongest broadcast frequencies (BSM) ..... 22
Radio settings ..... 23

## Disc ..... 23

Inserting and ejecting a disc ..... 23
Basic operation ..... 23

## Compressed files ..... 26

Inserting and ejecting media ..... 26
Starting procedure ..... 27
Basic operation ..... 27

## iPod ..... 30

Connecting your iPod ..... 30
Basic operation ..... 30

## AppRadio Mode + ..... 32

Using AppRadio Mode + ..... 32
Starting procedure ..... 32
Using the keyboard (for iPhone users) ..... 33
Using the audio mix function ..... 33

## Apple CarPlay ..... 34

Using Apple CarPlay ..... 34
Setting the driving position ..... 34
Starting procedure ..... 34
Adjusting the volume ..... 35

## Android Auto™ ..... 35

Using Android Auto ..... 35
Setting the driving position ..... 35
Starting procedure ..... 36
Adjusting the volume ..... 36
Setting the auto-launch function ..... 36

## Pandora® ..... 37

Listening to Pandora ..... 37
Basic operation ..... 38

## SiriusXM® Satellite Radio 39

Subscribing to the SiriusXM Satellite Radio service ..... 39
Listening to SiriusXM ..... 39
Basic operation ..... 39
TuneScan™ ..... 40
SportsFlash™ ..... 41
SmartFavorites ..... 41
Using Featured Favorites Band ..... 41
Parental lock ..... 41
Using the content alerts function ..... 41
SiriusXM settings ..... 42

## HDMI ..... 43

Starting procedure ..... 43
Basic operation ..... 43

## AUX ..... 43

Starting procedure ..... 43
Basic operation ..... 44

## AV input ..... 44

Starting procedure ..... 44
Basic operation ..... 45

## Wireless Mirroring ..... 45

Starting procedure ..... 45
Basic operation ..... 46

## iDatalink ..... 46

Using iDatalink ..... 46
Activating iDatalink Maestro ..... 46
Starting procedure ..... 47
Displaying obstacle detection information ..... 48
iDatalink settings ..... 48

## Settings ..... 49

Displaying the setting screen ..... 49
System settings ..... 49
Theme settings ..... 53
Audio settings ..... 54
Video settings ..... 58

## Favorite menu ..... 60

Creating a shortcut ..... 60
Selecting a shortcut ..... 60
Removing a shortcut ..... 60

## Other functions ..... 60

Setting the time and date ..... 60
Selecting the video for the rear display ..... 61
Setting the anti-theft function ..... 61
Restoring this product to the default settings 62

## Appendix ..... 62

Troubleshooting ..... 62
Error messages ..... 63
Handling and care of discs ..... 66
Playable discs ..... 66
Detailed information for playable media ..... 67
Bluetooth ..... 69
SiriusXM® Satellite Radio ..... 69
HD Radio™ Technology ..... 69
SDXC ..... 69
WMA/WMV ..... 69
FLAC ..... 70
DivX ..... 70

# Contents

AAC ..... 70
Google™, Google Play, Android ..... 70
Android Auto ..... 70
Detailed information regarding connected iPod devices ..... 70
Using app-based connected content ..... 71
Pandora® ..... 71
HDMI ..... 71
Notice regarding video viewing ..... 71
Notice regarding DVD-Video viewing ..... 71
Notice regarding MP3 file usage ..... 71
Notice regarding open source licenses ..... 71
Using the LCD screen correctly ..... 71
Specifications ..... 72

# Precaution

## Information to user

–MODEL NO.: AVH-W4400NEX
FCC ID: AJDK103
IC: 775E-K103
–This device complies with Part 15 of FCC Rules and Innovation, Science, and Economic Development Canada licence-exempt RSSs. Operation is subject to the following two conditions: (1) this device may not cause interference, and (2) this device must accept any interference, including interference that may cause undesired operation of this device.
–The Bluetooth antenna cannot be removed (or replaced) by user.
–This equipment complies with FCC/IC radiation exposure limits set forth for an uncontrolled environment and meets the FCC radio frequency (RF) Exposure Guidelines and RSS-102 of the IC radio frequency (RF) Exposure rules. This equipment should be installed and operated keeping the radiator at least 20cm or more away from person's body.

–This transmitter must not be co-located or operated in conjunction with any other antenna or transmitter.
–Alteration or modifications carried out without appropriate authorization may invalidate the user's right to operate the equipment.
–NOTE: This equipment has been tested and found to comply with the limits for a Class B digital device, pursuant to Part 15 of the FCC Rules. These limits are designed to provide reasonable protection against harmful interference in a residential installation. This equipment generates, uses and can radiate radio frequency energy and, if not installed and used in accordance with the instructions, may cause harmful interference to radio communications. However, there is no guarantee that interference will not occur in a particular installation. If this equipment does cause harmful interference to radio or television reception, which can be determined by turning the equipment off and on, the user is encouraged to try to correct the interference by one or more of the following measures:
– Reorient or relocate the receiving antenna.
– Increase the separation between the equipment and receiver.
– Connect the equipment into an outlet on a circuit different from that to which the receiver is connected.
– Consult the dealer or an experienced radio/TV technician for help.

**CAUTION:**
**USE OF CONTROL OR ADJUSTMENT OR PERFORMANCE OF PROCEDURES OTHER THAN THOSE SPECIFIED HEREIN MAY RESULT IN HAZARDOUS RADIATION EXPOSURE.**
**CAUTION:**
**THE USE OF OPTICAL INSTRUMENTS WITH THIS PRODUCT WILL INCREASE EYE HAZARD.**

**CAUTION**
This product is a Class 1 laser product classified under the safety standard, IEC 60825-1:2007, and contains a class 1M laser module. To ensure continued safety, do not remove any covers or attempt to gain access to the inside of the product. Refer all servicing to qualified personnel.

CLASS 1 LASER PRODUCT

CAUTION—CLASS 1M VISIBLE AND INVISIBLE LASER RADIATION WHEN OPEN, DO NOT VIEW DIRECTLY WITH OPTICAL INSTRUMENTS.

**CAN ICES-3 B/NMB-3 B**

### ⚠ WARNING

- This product contains chemicals known to the State of California and other governmental entities to cause cancer and birth defects or other reproductive harm. ***Wash hands after handling***.
- Slots and openings in the cabinet are provided for ventilation to ensure reliable operation of the product, and to protect it from overheating. To prevent fire hazard, the openings should never be blocked or covered with items (such as papers, floor mat, cloths).

### ⚠ CAUTION

This product is evaluated in moderate and tropical climate condition under the Audio, video and similar electronic apparatus - Safety requirements, IEC 60065.

## The Safety of Your Ears is in Your Hands

Get the most out of your equipment by playing it at a safe level—a level that lets the sound come through clearly without annoying blaring or distortion and, most importantly, without affecting your sensitive hearing. Sound can be deceiving.
Over time, your hearing "comfort level" adapts to higher volumes of sound, so what sounds "normal" can actually be loud and harmful to your hearing. Guard against this by setting your equipment at a safe level BEFORE your hearing adapts.

**►ESTABLISH A SAFE LEVEL:**

- Set your volume control at a low setting.
- Slowly increase the sound until you can hear it comfortably and clearly, without distortion.
- Once you have established a comfortable sound level, set the dial and leave it there.

**►BE SURE TO OBSERVE THE FOLLOWING GUIDELINES:**

- Do not turn up the volume so high that you can't hear what's around you.
- Use caution or temporarily discontinue use in potentially hazardous situations.
- Do not use headphones while operating a motorized vehicle; the use of headphones may create a traffic hazard and is illegal in many areas.

# Important safety information

### ⚠ WARNING

- Do not attempt to install or service this product by yourself. Installation or servicing of this product by persons without training and experience in electronic equipment and automotive accessories may be dangerous and could expose you to the risk of electric shock, injury or other hazards.
- Do not allow this product to come into contact with liquids. Electrical shock could result. Also, damage to the product, smoke, and overheating could result from contact with liquids.
- If liquid or foreign matter should get inside this product, park your vehicle in a safe place, turn the ignition switch off (ACC OFF) immediately and consult your dealer or the nearest authorized Pioneer Service Station. Do not use this product in this condition because doing so may result in a fire, electric shock, or other failure.
- If you notice smoke, a strange noise or odor from this product, or any other abnormal signs on the LCD screen, turn off the power immediately and consult your dealer or the nearest authorized Pioneer Service Station. Using this product in this condition may result in permanent damage to the system.
- Do not disassemble or modify this product, as there are high-voltage components inside which may cause an electric shock. Be sure to consult your dealer or the nearest authorized Pioneer Service Station for internal inspection, adjustments or repairs.

Before using this product, be sure to read and fully understand the following safety information:

- Do not operate this product, any applications, or the rear view camera option (if purchased) if doing so will divert your attention in any way from the safe operation of your vehicle. Always observe safe driving rules and follow all existing traffic regulations. If you experience difficulty in operating this product, pull over, park your vehicle in a safe location and apply the parking brake before making the necessary adjustments.
- Never set the volume of this product so high that you cannot hear outside traffic and emergency vehicles.
- To promote safety, certain functions are disabled unless the vehicle is stopped and the parking brake is applied.
- Keep this manual handy as a reference for operating procedures and safety information.
- Do not install this product where it may (i) obstruct the driver's vision, (ii) impair the performance of any of the vehicle's operating systems or safety features, including air bags or hazard lamp buttons or (iii) impair the driver's ability to safely operate the vehicle.
- Please remember to fasten your seat belt at all times while operating your vehicle. If you are ever in an accident, your injuries can be considerably more severe if your seat belt is not properly buckled.
- Never use headphones while driving.

- Rear visibility systems (backup cameras) are required in certain new vehicles sold in the U.S. and Canada. U.S. regulations began according to a two year phase-in on May 1, 2016, and both the U.S. and Canada require that all such vehicles manufactured on or after May 1, 2018 have rear visibility systems. **Owners of vehicles equipped with compliant rear visibility systems should not install or use this product in a way that alters or disables that system's compliance with applicable regulations.** If you are unsure whether your vehicle has a rear visibility system subject to the U.S. or Canadian regulations, please contact the vehicle manufacturer or dealer.

  If your vehicle has a compliant backup camera that displays the backup view through the factory receiver, do not use the Pioneer receiver unless it is connected to and displays the same view as the factory backup camera. Connection to the factory backup camera will require an adaptor, sold separately. Not all vehicles may be able to connect. Please check with a qualified professional installer for installation options specific to your vehicle.

## To ensure safe driving

**Parking brake interlock**

Certain functions (such as viewing of video image and certain touch panel key operations) offered by this product could be dangerous (possibly resulting in serious injury or death) and/or unlawful if used while driving. To prevent such functions from being used while the vehicle is in motion, there is an interlock system that senses when the parking brake is set and when the vehicle is moving. If you attempt to use the functions described above while driving, they will become disabled until you stop the vehicle in a safe place.

### ⚠ WARNING

- **LIGHT GREEN LEAD AT POWER CONNECTOR IS DESIGNED TO DETECT PARKED STATUS AND MUST BE CONNECTED TO THE POWER SUPPLY SIDE OF THE PARKING BRAKE SWITCH. IMPROPER CONNECTION OR USE OF THIS LEAD MAY VIOLATE APPLICABLE LAW AND MAY RESULT IN SERIOUS INJURY OR DAMAGE.**
- **Do not take any steps to tamper with or disable the parking brake interlock system which is in place for your protection. Tampering with or disabling the parking brake interlock system could result in serious injury or death.**
- **To avoid the risk of damage and injury and the potential violation of applicable laws, this product is not for use with a video image that is visible to the driver.**
- In some countries the viewing of video image on a display inside a vehicle even by persons other than the driver may be illegal. Where such regulations apply, they must be obeyed.

If you attempt to watch video image while driving, the warning **"Viewing of front seat video source while driving is strictly prohibited."** will appear on the screen. To watch video image on this display, stop the vehicle in a safe place and apply the parking brake. Please keep the brake pedal pushed down before releasing the parking brake.

## When using a display connected to V OUT

The video output terminal (**V OUT**) is for connection of a display to enable passengers in the rear seats to watch video images.

### ⚠ WARNING

NEVER install the rear display in a location that enables the driver to watch video images while driving.

## To avoid battery exhaustion

Be sure to run the vehicle engine while using this product. Using this product without running the engine can drain the battery.

### ⚠ WARNING

Do not install this product in a vehicle that does not have an ACC wire or circuitry available.

## Rear view camera

With an optional rear view camera, you are able to use this product as an aid to keep an eye on trailers, or backing into a tight parking spot.

### ⚠ WARNING

- SCREEN IMAGE MAY APPEAR REVERSED.
- USE INPUT ONLY FOR REVERSE OR MIRROR IMAGE REAR VIEW CAMERA. OTHER USE MAY RESULT IN INJURY OR DAMAGE.
- If this product displays the vehicle's backup camera image, close the LCD panel before putting the vehicle in reverse.

### ⚠ CAUTION

- For safety reasons, the rear view camera function is not available until this product boots up completely.
- The rear view mode is to use this product as an aid to keep an eye on the trailers, or while backing up. Do not use this function for entertainment purposes.

## Handling the SD card slot

### ⚠ CAUTION

- Keep the SD memory card out of the reach of small children to prevent them from accidentally swallowing it.
- To prevent data loss and damage to the storage device, never remove it from this product while data is being transferred.
- If data loss or corruption occurs on the storage device for any reason, it is usually not possible to recover the data. Pioneer accepts no liability for damages, costs or expenses arising from data loss or corruption.

- Never insert or eject an SD memory card while driving.

## Handling the USB connector

**⚠ CAUTION**

- To prevent data loss and damage to the storage device, never remove it from this product while data is being transferred.
- Pioneer cannot guarantee compatibility with all USB mass storage devices and assumes no responsibility for any loss of data on media players, iPhone, smartphone, or other devices while using this product.

## Failure to operate

After-sales service for Pioneer products

Please contact the dealer or distributor from which you purchased the product for after-sales service (including warranty conditions) or any other information. In case the necessary information is not available, please contact the companies listed below.
Please do not ship your product to the companies at the addresses listed below for repair without making advance contact.
–USA&CANADA
Pioneer Electronics (USA) Inc.
CUSTOMER SUPPORT DIVISION
P.O. Box 1760 Long Beach, CA 90801-1760
800-421-1404
For warranty information, please see the Limited Warranty sheet included with your product.

## Visit our website

Visit us at the following site:
http://www.pioneerelectronics.com
http://www.pioneerelectronics.ca

- We offer the latest information about PIONEER CORPORATION on our website.
- Pioneer regularly provides software updates to further improve it's products. Please check the support section of the Pioneer website for all available software updates.

1. **Register your product.**
2. **Receive updates on the latest products and technologies.**
3. **Download owner's manuals, order product catalogs, research new products, and much more.**
4. **Receive notices of software upgrades and software updates.**

## Protecting the LCD panel and screen

- Do not expose the LCD screen to direct sunlight when this product is not used. This may result in LCD screen malfunction due to the resulting high temperatures.
- When using a cellular phone, keep the antenna of the cellular phone away from the LCD screen to prevent disruption of the video in the form of spots, colored stripes, etc.
- To protect the LCD screen from damage, be sure to touch the touch panel keys only with your finger and do so gently.

## Notes on internal memory

- If the battery is disconnected or discharged, the memory will be erased and must be reprogrammed.
- The information will be erased by disconnecting the yellow lead from the battery (or removing the battery itself).
- Some of the settings and recorded contents will not be reset.

## About this manual

This manual uses diagrams of actual screens to describe operations. However, the screens on some units may not match those shown in this manual depending on the model used.

### Meanings of symbols used in this manual

| | |
|---|---|
| | This indicates to touch the appropriate soft key on the touch screen. |
| | This indicates to touch and hold the appropriate soft key on the touch screen. |

# Parts and controls

## Main unit

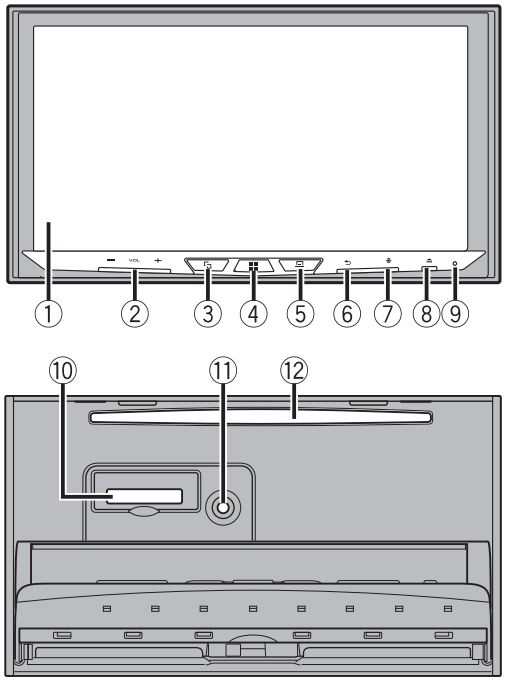


| | | |
|---|---|---|
| ① | LCD screen | |
| ② | VOL (+/-) | |
| ③ | | Press to switch between the Application screen and the AV operation screen.<br>Press and hold to switch to the camera view mode.<br>**NOTE**<br>To activate the camera view mode with this button, set [Back Camera Input] to [On] or [AV Input] to [Camera] (page 49). |
| ④ | | Press to display the top menu screen.<br>Press and hold to power off. To power back on, press any button. |
| ⑤ | | Press to display the menu bar (page 11).<br>Press and hold to mute or unmute. |
| ⑥ | | Press to display the top menu screen or back to previous screen.<br>Press and hold to turn off the display. |
| ⑦ | | Press to activate the voice recognition mode with a connected iPhone or smartphone.<br>Press and hold to display the connectable device list screen or device search screen. |
| ⑧ | | |
| ⑨ | RESET | Press to reset the microprocessor (page 9). |
| ⑩ | SD card slot | Refer to Inserting and ejecting an SD memory card (page 26). |
| ⑪ | Auto EQ microphone input jack | Use to connect a microphone for acoustical measurement (sold separately). |
| ⑫ | Disc-loading slot | Refer to Inserting and ejecting a disc (page 23). |

## Remote Control

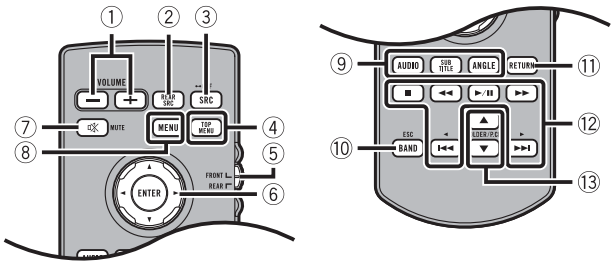


| | | |
|---|---|---|
| ① | VOLUME (+/-) | |
| ② | REAR SRC | Press to cycle through all the available rear sources.<br>Press and hold to turn the rear source off. |
| ③ | SRC | Press to cycle through all the available sources.<br>Press and hold to turn the source off. |
| ④ | TOP MENU | Press to return to the top menu during DVD playback. |
| ⑤ | Source mode select switch | Use to switch the source mode between the front source and the rear source. |
| ⑥ | Thumb pad | Use to select a menu on the DVD menu. |
| ⑦ | MUTE | |
| ⑧ | MENU | Displays the DVD menu during DVD playback. |
| ⑨ | AUDIO<br>SUBTITLE<br>ANGLE | Press to change the audio language, subtitle language or viewing angle during DVD playback. |
| ⑩ | BAND/ESC | Press to select the tuner band when tuner is selected as a source.<br>Press to switch between media file types when playing the following types of data:<br>• Disc<br>• External storage device (USB, SD) |

| | | |
|---|---|---|
| ⑪ | RETURN | Press to return to the specified point and start playback from there. |
| ⑫ | ▶/❚❚<br>◀◀ or ▶▶ | Press to pause or resume playback.<br>For audio: Press and hold to perform fast reverse or fast forward.<br>For video: Press to perform fast reverse or fast forward. |
| | ❙◀◀ or ▶▶❙ | Press to return to the previous track (chapter) or go to the next track (chapter).<br>Press to answer or end a call. |
| | ■ | Press to stop playback.<br>If you resume playback, playback will start from the point where you stopped.<br>Press the button again to stop playback completely. |
| ⑬ | FOLDER/P.CH | Press to select the next or previous title or folder.<br>Press to recall radio station frequencies assigned to preset channel keys.<br>Press to answer or end a call. |

# Protecting your product against theft

### ⚠ CAUTION

- Do not attempt to detach the front panel while DISC/SD is in the eject position.
- Do not attempt to detach the front panel while data is being written to USB/SD. Doing so may cause the data to become corrupted.
- After the front panel has been detached, the attaching plate will move back to its original position automatically. Be careful not to let hands or other objects get caught behind the monitor as it is moving back.
- Please make sure that the front panel is in its original position while the vehicle is in motion. It is dangerous to drive with the front panel sticking out.
- Do not place beverages or other objects on top of the front panel while it is fully open.

### Important

- Handle the front panel with care when removing or attaching it.
- Avoid subjecting the front panel to excessive shock.
- Keep the front panel out of direct sunlight and high temperatures.
- If removed, replace the front panel on the product before starting up your vehicle.

## Removing the front panel

**1** **Press ⏏.**

**2** **Touch [icon].**

**3** **Slide the dial at the bottom of the front panel to the right, and lift up the front panel while pushing down on the dial.**

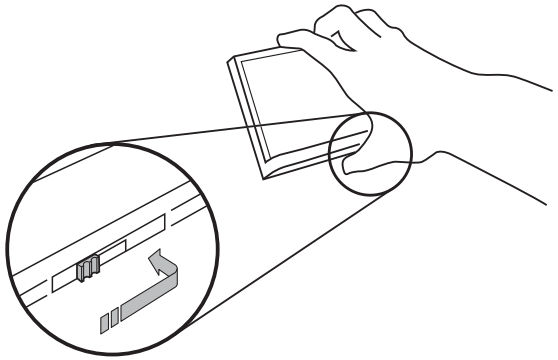

**4** **Put the front panel into the provided protective case for safe keeping.**

## Attaching the front panel

**1** **Slide the front panel into the top of the product and push it into place.**
Slide the inserter on the front panel into the insertion slot on top of the unit and push it into place.

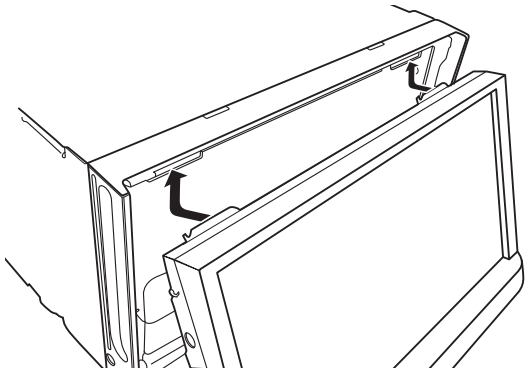

**2** **Push on the bottom of the front panel until it clicks into place.**

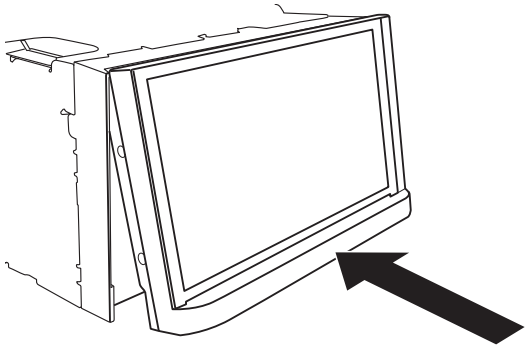

# Basic operation

## Notes on using the LCD panel

### ⚠ WARNING

- Keep hands and fingers clear of this product when opening, closing, or adjusting the LCD panel. Be especially cautious of children's hands and fingers.
- Do not use with the LCD panel left open. It may result in injury in the event of an accident.
- Close the LCD panel before putting the vehicle in motion. Driving with the LCD panel open may damage the unit, and any backup camera image shown through the LCD panel will not be visible.

### ⚠ CAUTION

- Do not open or close the LCD panel forcefully. It may cause a malfunction.
- Do not operate this product until the LCD panel has completely opened or closed. If this product is operated while the LCD panel is opening or closing, the LCD panel may stop at that angle for safety.
- Do not place glass or can on the open LCD panel.

## Adjusting the LCD panel angle

**1** **Press ⏏.**

**2** **Touch [+] or [−] to adjust the angle of the LCD panel.**

**3** **Touch [✕].**
Returns to the previous screen.

## Resetting the microprocessor

### ⚠ CAUTION

- Pressing the RESET button resets settings and recorded contents to the factory settings.
  – Do not perform this operation when a device is connected to this product.
  – Some of the settings and recorded contents will not be reset.
- The microprocessor must be reset under the following conditions:
  – Prior to using this product for the first time after installation.
  – If this product fails to operate properly.
  – If there appears to be problems with the operation of the system.

**1** **Turn the ignition switch OFF.**

**2** **Press RESET with a pen tip or other pointed tools.**
Settings and recorded contents are reset to the factory settings.

# Preparing the remote control

Remove the insulation sheet before use.

**How to replace the battery**

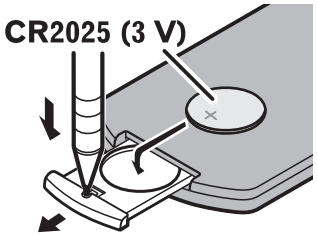


Insert the CR2025 (3 V) battery with the plus (+) and minus (-) poles orientated properly.

### ⚠ WARNING

- Do not ingest the battery, Chemical Burn Hazard.
  (The remote control supplied with) This product contains a coin/button cell battery. If the coin/button cell battery is swallowed, it can cause severe internal burns in just 2 hours and can lead to death.
  Keep new and used batteries away from children.
  If the battery compartment does not close securely, stop using the product and keep it away from children.
  If you think batteries might have been swallowed or placed inside any part of the body, seek immediate medical attention.
- Batteries (battery pack or batteries installed) must not be exposed to excessive heat such as sunshine, fire or the like.

### ⚠ CAUTION

- Remove the battery if the remote control is not used for a month or longer.
- There is a danger of explosion if the battery is incorrectly replaced. Replace only with the same or equivalent type.
- Do not handle the battery with metallic tools.
- Do not store the battery with metallic objects.
- If the battery leaks, wipe the remote control completely clean and install a new battery.
- When disposing of used batteries, please comply with governmental regulations or environmental public institutions' rules that apply in your country/area.
- "Perchlorate Material – special handling may apply. See www.dtsc.ca.gov/hazardouswaste/perchlorate. (Applicable to California, U.S.A.)"

## Using the remote control

Point the remote control in the direction of the front panel to operate.

**NOTE**

The remote control may not function properly in direct sunlight.

**Important**

- Do not store the remote control in high temperatures or direct sunlight.
- Do not let the remote control fall onto the floor, where it may become jammed under the brake or gas pedal.

# Starting up the unit

**1** **Start the engine to boot up the system.**
The [Select Program Language] screen appears.

**NOTES**

- From the second time on, the screen shown will differ depending on the previous conditions.
- From the second time on, enter the password for the anti-theft function if the password entry screen appears.

**2** **Touch the language.**

**3** **Touch [→].**
The [Speaker Mode Settings] screen appears.

**4** **Touch the speaker modes.**
[**Standard Mode**]
4-speaker system with front and rear speakers, or a 6-speaker system with front and rear speakers and subwoofers.
[**Network Mode**]
3-way system with a high range speaker, middle range speaker and subwoofer (low range speaker) for reproduction of high, middle and low frequencies (bands).

### ⚠ WARNING

Do not use the unit in standard mode when a speaker system for 3-way network mode is connected to the unit. This may cause damage to the speakers.

**5** **Touch [→].**
Initial Legal Disclaimer screen appears.

**6** **Touch [OK].**
The top menu screen appears.

**NOTE**

Once the speaker mode is set, the setting cannot be changed unless this product is restored to the default settings. Restore the default settings to change the speaker mode setting (page 62).

## Switching the speaker mode

To change the speaker mode, you need to restore this product to the default settings.

1 **Restore the default setting (page 62).**

# Using the touch panel

You can operate this product by touching the keys on the screen directly with your fingers.

**NOTE**

To protect the LCD screen from damage, be sure to touch the screen only with your finger gently.

## Common touch panel keys

[↑]: Returns to the previous screen.
[×]: Close the screen.

## Operating list screens

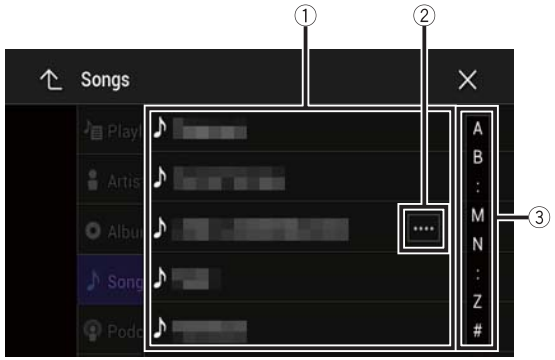


| | |
|---|---|
| ① | **Touching an item on the list allows you to narrow down the options and proceed to the next operation.** |
| ② | **Appears when all characters are not displayed on the display area.**<br>If you touch the key, the rests are scrolled for display.<br>**NOTE**<br>This function is available only when you stop your vehicle in a safe place and apply the parking brake. |
| ③ | **Appears when items cannot be displayed on a single page.**<br>Drag the side bar, the initial search bar or the list to view any hidden items. |

## Operating the time bar

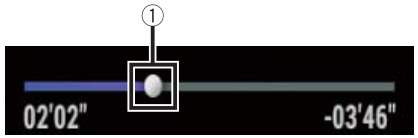


| | |
|---|---|
| ① | **You can change the playback point by dragging the key.**<br>The playback time corresponding to the position of the key is displayed while dragging the key. |

## Operating the menu bar

1 **Press [⊟].**
The menu bar pops up on the screen.

**NOTE**

The menu bar availability may vary depending on the activating source.

| | |
|---|---|
| [☼/☾] | **Switches the dimmer duration by day or night.**<br>**NOTE**<br>When AppRadio Mode + is on, AppRadio Mode + SideControlBar is displayed. |
| [►/II] | **Switches between playback and pause.** |
| [⏮] [⏭] | **Skips files forward or backward.** |
| | **Performs fast reverse or fast forward.** |
| [⚙] | **Displays setting menu screen (page 49).** |
| [×] | **Closes the menu bar.** |

## Switching the operation panel

1 **Touch [Func.›] or [1/2 ›].**

English

The hidden function keys appear.

**NOTE**

This key does not appear for some AV sources.

## Operating the on-screen keyboard

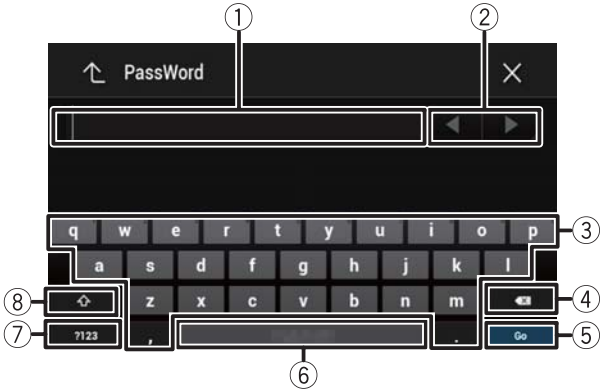


| | |
|---|---|
| ① | **Displays the characters that are entered.** |
| ② | **Moves the cursor to the right or left for a number of characters equivalent to the number of touches.** |
| ③ | **Enters the characters in the text box.** |
| ④ | **Deletes the input text to the left of the cursor one letter at a time.**<br>Touching and holding the key deletes the letters to the left of the cursor in rapid succession. |
| ⑤ | **Confirms the entry and proceeds to the next step.** |
| ⑥ | **Enters a space.** |
| ⑦ | **Switches between alphabet and numbers/symbols.** |
| ⑧ | **Switches between capital and lower case letters.** |

# Top menu screen

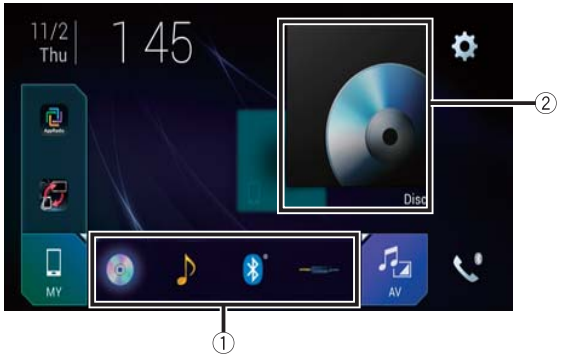


| | |
|---|---|
| ① | **Favorite source icons**<br>**TIPS**<br>• When you connect the external navigation system to this unit, the navigation mode key is displayed at the middle of the right side of the display.<br>• If you select [Power OFF], you can turn off almost all functions. The [Power OFF] mode is released in the following cases.<br>– An incoming call is received (only for hands-free phoning via Bluetooth).<br>– A rear view camera image is input when the vehicle is in reverse.<br>– A button on this unit is pressed.<br>– The ignition switch is turned off (ACC OFF), then turned on (ACC ON). |
| ② | **AV/Device source operation key.**<br>Displays the current source.<br>**TIP**<br>When the last source is displayed behind the key, you can switch the source by touching the key. |
| 12:48 | **Setting the time and date (page 60)** |
| | **Settings (page 49) and Favorite menu (page 60)** |

| | |
|---|---|
| | **Connected device key**<br>Displays connected device.<br>Switches the source or application with connected devices such as AppRadio Mode +, external navigation system, Apple CarPlay, Android Auto.<br><br>**TIPS**<br>• When a device with a compatible application is connected, the favorite application key appears. Once the key appears, you can adjust the range of the favorite application key area with the following steps.<br>**1 Touch and hold .**<br>appears at the top right of the favorite application key.<br>**2 Drag to the desired position.**<br>To finish the adjusting, touch any place of the display except for the favorite application key.<br>• You can also switch the mobile device to be connected with the following steps.<br>**1 Touch .**<br>**2 Touch .**<br>**3 Select desired device then follow the instruction.**<br>Touch for the first wireless connection with the device.<br><br>**NOTE**<br>This function is available only when you stop your vehicle in a safe place and apply the parking brake or the vehicle is completely stopped. |
| AV | **AV source (page 19)** |
| | **Hands-free phoning (page 14)** |

# Bluetooth

## Bluetooth connection

**1 Turn on the Bluetooth function on the device.**

**2 Press .**

**3 Touch then .**
The Bluetooth screen appears.

**4 Touch [Connection].**

**5 Touch .**
The unit starts to search for available devices, then displays them in the device list.

**6 Touch the Bluetooth device name.**
After the device is successfully registered, a Bluetooth connection is established by the system. Once the connection is established, the device name is displayed on the list.

**NOTES**
- If twenty devices are already paired, [Memory Full] is displayed. Delete a paired device first (page 14).
- If your device supports SSP (Secure Simple Pairing), a six-digit number appears on the display of this product. Touch [Yes] to pair the device.
- If a PIN code input is required, enter a PIN code. (The default PIN code is "0000".)

**TIP**
The Bluetooth connection can also be made by detecting this product from the Bluetooth device. Before registration, make sure that [Visibility] in the [Bluetooth] menu is set to [On] (page 14). For details on Bluetooth device operations, refer to the operating instructions supplied with the Bluetooth device.

## Bluetooth settings

**1 Press .**

**2 Touch then .**

**⚠ CAUTION**
Never turn this product off and disconnect the device while the Bluetooth setting operation is being processed.

| Menu Item | Description |
|---|---|
| **[Connection]** | Connect, disconnect, or delete registered Bluetooth device manually.<br>Touch [🗑] to delete registered device.<br>To connect a registered Bluetooth device manually, touch the name of the device.<br>To disconnect the device, touch the name of the connected device in the list.<br><br>**NOTE**<br>Connect the Bluetooth device manually in the following cases:<br>• Two or more Bluetooth devices are registered, and you want to manually select the device to be used.<br>• You want to reconnect a disconnected Bluetooth device.<br>• Connection cannot be established automatically for some reason. |
| **[Auto Connect]**<br>[On] [Off] | Select [On] to connect the last connected Bluetooth device automatically. |
| **[Visibility]**<br>[On] [Off] | Select [On] to make this product visible to the other device. |
| **[PIN Code Input]** | Change the PIN code for Bluetooth connection.<br>The default PIN code is "0000".<br>**1 Touch [0] to [9] to input the pin code (up to 8 digits).**<br>**2 Touch [↵].** |
| **[Device Information]** | Displaying the device name and address of this product. |
| **[Bluetooth Memory Clear]** | Touch [Clear] then [OK] to clear the Bluetooth memory. |

# Hands-free phoning

To use this function you need to connect your cellular phone to this product via Bluetooth in advance (page 13).

## ⚠ CAUTION

For your safety, avoid talking on the phone as much as possible while driving.

## Making a phone call

**1 Press [⊞].**

**2 Touch [📞].**
The phone menu screen appears.

**3 Touch one of the call icons on the phone menu screen.**

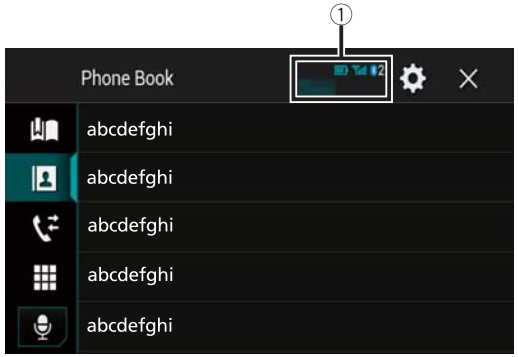


| | |
|---|---|
| ① | **The following items are displayed.**<br>• Name of the current cellular phone<br>• List number of the current cellular phone<br>• Reception status of the current cellular phone<br>• Battery status of the current cellular phone |
| [📖] | **Using preset dial list (page 15)** |
| [📇] | **Using phone book**<br>Select a contact from the phone book. Touch the desired name on the list then select the phone number.<br><br>**TIPS**<br>• The contacts on your phone will be automatically transferred to this product.<br>• Update the phone book manually.<br><br>**NOTES**<br>• [Visibility] of the [Bluetooth] screen should be on (page 14).<br>• If two cellular phones are automatically connected to this product with the Bluetooth device auto connect function, the phone book of the second phone is displayed. |
| [📞] | **Using call history**<br>Make a phone call from the received call [📞], dialed call [📞], or missed call [📞]. |
| [⊞] | **Direct phone number input**<br>Enter the number keys to enter the phone number then touch [📞] to make a call. |
| [🎤] | **Switches to the voice recognition function (page 15).** |

### ▸To end the call

**1 Touch [☎].**

## Using the preset dial lists

### ▸Registering a phone number

You can easily store up to six phone numbers per device as presets.

1 Press .

2 Touch .

3 Touch or .
On the [Phone Book] screen, touch the desired name to display the contact's phone number.

4 Touch .

### ▸Dialing from the preset dial list

1 Touch .

2 **Touch the desired entry on the list to make a call.**
The dial screen appears and dialing starts.

### ▸Deleting a phone number

1 Press .

2 Touch .

3 Touch .

4 Touch .

5 Touch [Yes].

## Receiving a phone call

1 **Touch to answer the call.**
Touch to end the call.

**TIPS**

- Touch while getting a call waiting, switch to the talking person.
- Touch while getting a call waiting to reject the call.

**NOTE**

When two phones are connected at the same time, if an incoming call is received on the second phone while you are talking on the first phone, the dial confirmation screen for the second phone will be displayed.

## Voice recognition function

You can use the voice recognition function of iPhone or smartphone.

**NOTES**

- When an iPhone running iOS 6.1 or higher is used, Siri Eyes Free Mode is available with this product.
- For using this function with a smartphone, the device must be compatible with Android Auto. For using the voice recognition function with a smartphone, launch Android Auto beforehand.

1 Press .

2 Touch .

3 Touch .
The voice recognition function launches and the voice control screen appears.

**TIP**

You can also launch the voice recognition function by pressing .

## Minimizing the dial confirmation screen

1 Touch .

**TIP**

To display the dial confirmation screen, touch again.

**NOTES**

- The dial confirmation screen cannot be minimized on the AV operation screen.
- AV sources cannot be selected even if the dial confirmation screen is minimized while talking on the phone or receiving an incoming call.

## Phone settings

1 Press .

2 Touch then .

| Menu Item | Description |
|---|---|
| **[Auto Answer]**<br>[On] [Off] | Select [On] to answer an incoming call automatically. |
| **[Ring Tone]**<br>[On] [Off] | Select [On] if the ring tone does not come out from the car speakers. |
| **[Invert Name]** | Select [Yes] to change the order of the first and last names in the phone book. |

English

## Setting the private mode

During a conversation, you can switch to private mode (talk directly on your cellular phone).

**1 Touch [Private On] or [Private Off] to turn private mode on or off.**

**NOTES**

- If two cellular phones are connected to this product and the first phone is set to private mode, you can receive incoming calls on the second phone while maintaining the call in progress on the first phone.
- When two cellular phones are connected to this product and private mode of the first phone is turned off, if an incoming call on the second phone is answered while a call is in progress on the first phone or while dialing or receiving a call on the first phone, the call, dialing, or receiving on the first phone is ended.

## Adjusting the other party's listening volume

This product can be adjusted to the other party's listening volume.

**1 Touch [Vol] to switch between the three volume levels.**

## Notes for hands-free phoning

### ►General notes

- Connection to all cellular phones featuring Bluetooth wireless technology is not guaranteed.
- The line-of-sight distance between this product and your cellular phone must be 10 meters or less when sending and receiving voice and data via Bluetooth technology.
- With some cellular phones, the ring sound may not be output from the speakers.
- If private mode is selected on the cellular phone, hands-free phoning may be disabled.

### ►Registration and connection

- Cellular phone operations vary depending on the type of cellular phone. Refer to the instruction manual that came with your cellular phone for detailed instructions.
- When phone book transfer does not work, disconnect your phone and then perform pairing again from your phone to this product.

### ►Making and receiving calls

- You may hear a noise in the following situations:
  - When you answer the phone using the button on the phone.
  - When the person on the other end of the line hangs up the phone.
- If the person on the other end of the line cannot hear the conversation due to an echo, decrease the volume level for hands-free phoning.
- With some cellular phones, even after you press the accept button on the cellular phone when a call comes in, hands-free phoning may not be performed.
- The registered name will appear if the phone number is already registered in the phone book. When the same phone number is registered under different names, only the phone number will be displayed.

### ►The received call and dialed number histories

- You cannot make a call to the entry of an unknown user (no phone number) in the received call history.
- If calls are made by operating your cellular phone, no history data will be recorded in this product.

### ►Phone book transfers

- If there are more than 1 000 phone book entries on your cellular phone, not all entries may download completely.
- Depending on the phone, this product may not display the phone book correctly.
- If the phone book in the phone contains image data, the phone book may not be transferred correctly.
- Depending on the cellular phone, phone book transfer may not be available.

# Bluetooth audio

Before using the Bluetooth audio player, register and connect the device to this product (page 13).

**NOTES**

- Depending on the Bluetooth audio player connected to this product, the available operations with this product may be limited to the following two levels:
  - A2DP (Advanced Audio Distribution Profile): Only playing back songs on your audio player is possible.
  - A2DP and AVRCP (Audio/Video Remote Control Profile): Playing back, pausing, selecting songs, etc., are possible.
- Depending on the Bluetooth device connected to this product, the available operations with this product may be limited or differ from the descriptions in this manual.
- While you are listening to songs on your Bluetooth device, refrain from operating the phone function as much as possible. If you try operating, the signal may cause noise for song playback.
- When you are talking on the Bluetooth device connected to this product via Bluetooth, it may pause playback.

**1 Press [⊞].**

**2 Touch [⚙] then [🔧].**

The system setting screen appears.

**3 Touch [AV Source Settings].**

**4 Confirm that [Bluetooth Audio] is turned on.**

**5 Press [⊞].**

**6** Touch [AV].
The AV source screen appears.

**7** Touch [Bluetooth Audio].
The Bluetooth audio playback screen appears.

## Basic operation

### Bluetooth audio playback screen 1

| | |
|---|---|
| ▶/II | **Switches between playback and pause.** |
| ⏮ ⏭ | **Skips files forward or backward.**<br>• By pressing [⊡] then touch [⏮] or [⏭], you can also skip files forward or backward.<br>• By pressing [⊡] then touch and hold [⏮] or [⏭], you can also perform fast reverse or fast forward. |
| ☰ | **Selects a file or folder from the list to playback.**<br>**NOTE**<br>This function is available only when the AVRCP version of the Bluetooth device is 1.4 or higher. |
| 📱 | **Switches among the Bluetooth devices when the devices are connected to this product via Bluetooth.** |

### Bluetooth audio playback screen 2

| | |
|---|---|
| 🔁 | **Sets a repeat play range.** |
| 🔀 | **Plays files in random order.** |

English

# Wi-Fi

You can connect your Wi-Fi certfied mobile device to this product via Wi-Fi connection.

## Wi-Fi connection

1 **Turn on the Wi-Fi function on the device.**

2 **Press [ ].**

3 **Touch [ ] then [ ].**

4 **Touch [Wi-Fi Settings].**

5 **Set [Wi-Fi] to [ON].**

6 **Touch [Device Information].**

7 **Connect this product with the dislayed network name in [Device Information] from the mobile device.**

## Wi-Fi settings

1 **Press [ ].**

2 **Touch [ ] then [ ].**

3 **Touch [Wi-Fi Settings].**

**NOTE**

This setting is available only when you stop your vehicle in a safe place and apply the parking brake.

The menu items vary according to the source.

| Menu Item | Description |
|---|---|
| **[Wi-Fi]**<br>[ON] [OFF] | Switches Wi-Fi connection on or off. |
| **[Device Information]** | Displays the network name and MAC address of this product. |

## Wi-Fi audio

Before using the Wi-Fi audio player, connect the device to this product via Apple CarPlay (page 34) or Android Auto wirelessly (page 36).

1 **Press [ ] then touch [AV].**

2 **Touch [Wi-Fi Audio].**

The Wi-Fi audio playback screen appears.

**NOTES**

- [Wi-Fi Audio] is displayed as [Android Auto] when the Android Auto is in use.
- [Wi-Fi Audio] is displayed as [Apple CarPlay] when the Apple CarPlay is in use.

### Basic operation

**Wi-Fi audio screen (Example: Apple CarPlay)**

Wi-Fi audio with Apple CarPlay operation is same as the iPod source function. For details of the operation, refer to the iPod operation (page 30).

# AV source

## Supported AV source

You can play or use the following sources with this product.
- HD Radio Broadcasts (HD Radio™ tuner)
- CD
- ROM (compressed audio or video files on discs)
- DVD-Video
- Video-CD

The following sources can be played back or used by connecting an auxiliary device.
- USB
- SD
- iPod
- Pandora®
- Bluetooth® audio
- Wi-Fi audio (Apple CarPlay, Android Auto)
- SiriusXM® Satellite Radio
- AV input (AV)
- AUX
- HDMI
- Wireless Mirroring
- Car Sources (iDatalink)

## Displaying the AV operation screen

**1 Press [⊞] then touch the AV operation key.**
The AV operation screen appears.

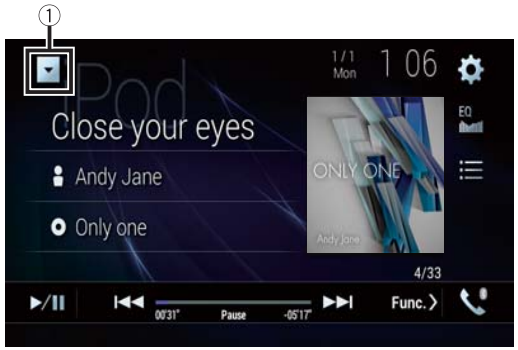


| | |
|---|---|
| 1 | **Displays the source list.** |
| EQ | **Recalls equalizer curves (page 55).** |

## Selecting a source

### Source on the AV source selection screen

**1 Press [⊞] then touch [AV].**

**2 Touch the source icon.**
When you select [Source OFF], the AV source is turned off.

### Source on the source list

**1 Press [⊞] then touch the AV operation key.**

**2 Touch [▼].**

**3 Touch the source key.**
When you select [Source OFF], the AV source is turned off.

## Changing the display order of source

**NOTE**
This function is available only when you stop your vehicle in a safe place and apply the parking brake.

### Changing the display order of source icons

**1 Press [⊞] then touch [AV].**

**2 Touch and hold the source icon and drag the icon to the desired position.**

### Changing the display order of source keys

**1 Press [⊞] then touch the AV operation key.**

**2 Touch [▼].**

**3 Touch [⇄].**

**4** **Drag the source key to the desired position.**

## Adjusting the range of favorite source icons area

**NOTE**

This function is available only when you stop your vehicle in a safe place and apply the parking brake.

**1** **Press [⊞].**

**2** **Touch and hold [AV].**

appears at the top left of the favorite source icons.

**3** **Drag to the desired position.**

To finish the adjusting, touch any place of the display except for the favorite source icons area.

# Setup for iPod/iPhone or smartphone

When using an iPod/iPhone or a smartphone with this product, configure settings of this product according to the device to be connected. This section describes the settings required for each device.

**NOTES**

- Operation methods may vary depending on the iPod/iPhone model or smartphone and its software version.
- Depending on the software version of iPod/iPhone or the version of smartphone OS, it may not be compatible with this unit.
- The setting may not be operable right after it is changed.
- This setting is available only when a hands-free telephone is not used.
- The setting will change after the following processes are automatically executed.
  – The source is turned off.
  – AppRadio Mode +, Apple CarPlay or Android Auto is exited.
  – The smartphone connection (USB and Bluetooth) is disconnected.

## iPod/iPhone

**Compatible iPod/iPhone models**

- iPhone 7, 7 Plus
- iPhone SE
- iPhone 6, 6 Plus, 6s, 6s Plus
- iPhone 5, 5c, 5s
- iPod touch 5th, 6th generation
- iPod nano 7th generation

Depending on the iPod models, it may not be compatible with some AV sources. For details about iPod/iPhone compatibility with this product, refer to the information on our website.

**1** **Press [⊞].**

**2** **Touch [⚙] then [🔧].**

**3** **Touch [Smartphone-related Settings].**

**4** **Touch [Smartphone Setup].**

**5** **Touch [iPhone/iPod].**

The available function icons are displayed.

6 Touch [OK].

## Smartphone (Android™ device)

**Compatible smartphones**

Compatibility with all smartphones is not guaranteed. For details about smartphone compatibility with this product, refer to the information on our website.

1 Press [ ].

2 Touch [ ] then [ ].

3 Touch [Smartphone-related Settings].

4 Touch [Smartphone Setup].

5 Touch [Others].

6 Touch [Android Auto] to use Android Auto.
Touch [AppRadio Mode] to use AppRadio Mode +.
The available function icons are displayed.

7 Touch [OK].

# HD Radio™ Technology

## About HD Radio stations

HD Radio stations offer high quality audio and data services. HD Radio stations are brought to you by your local FM or AM stations.
HD Radio stations feature the following:

- High quality audio
- FM multicasting
- Data service

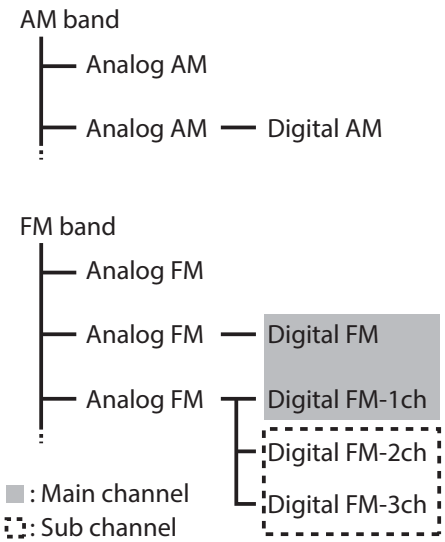


Digital Sound

Digital, CD-quality sound. HD Radio Technology enables local radio stations to broadcast a clean digital signal. AM sounds like today's FM and FM sounds like a CD.

PSD

Program Service Data: Contributes to the superior user experience of HD Radio Technology. Presents song name, artist, station IDs, HD2/HD3 Channel Guide, and other relevant data streams.

HD2/HD3

Adjacent to traditional main stations are extra local FM channels. These HD2/HD3 Channels provide new, original music as well as deep cuts into traditional genre.

Artist Experience

Visual information related to content being played on your HD Radio receiver, such as Album Art, historical photographs, still art from live broadcasts, among other related content.

## Starting procedure

**1** **Press [⊞] then touch [AV].**

**2** **Touch [HD Radio].**
The HD Radio screen appears.

## Basic operation

### HD Radio screen

| | |
|---|---|
| 1 … 6 | **Recalls the preset channel stored to a key from memory.** |
| | **Stores the current broadcast frequency to a key.** |
| › | **Displays the preset channel list.**<br>Select an item on the list ([1] to [6]) to switch to the preset channel. |
| FM1 AM | **Selects the FM1, FM2, FM3 or AM band.** |
| ◄ ► | **Performs manual tuning.** |
| | **Performs seek tuning or non stop seek tuning.**<br>Releasing the key in a few seconds skips to the nearest station from the current frequency. Keep holding the key for long seconds to perform, performs non stop seek tuning. |
| ⓘ | **Switches the text display between the main channel and sub channels.** |

**TIPS**

- By pressing [⊞] then touch [⏮] or [⏭], you can also switch the preset channels.
- By pressing [⊞] then touch and hold [⏮] or [⏭] and releasing it, you can also perform seek tuning.

## Storing the strongest broadcast frequencies (BSM)

The BSM (best stations memory) function automatically stores the six strongest broadcast frequencies under the preset channel keys [1] to [6].

**NOTES**

- Storing broadcast frequencies with BSM may replace those you have already saved.
- Previously stored broadcast frequencies may remain stored if the number of frequencies stored has not reached the limit.

**1** **Touch the preset channel list display key.**

**2** **Touch [BSM] to begin search.**
While the message is displayed, the six strongest broadcast frequencies will be stored under the preset channel keys in the order of their signal strength.

### To cancel the storage process

**1** **Touch [Cancel].**

## Radio settings

1 Press [⊞].

2 Touch [⚙] then [🔧].
The system setting screen appears.

3 Touch [AV Source Settings].

4 Touch [Radio Settings].

The menu items vary according to the source.

| Menu Item | Description |
|---|---|
| **[Blending]**<br>[On] [Off] | Switches to the analog broadcast of the same frequency level automatically when reception of a digital broadcast becomes weak. Select [Off] to receive only a digital signal. |
| **[Seek]** | Select the method of seek tuning. |
| [Seek All] | Seeks stations from both analog and digital broadcasting. |
| [Seek HD] | Only seeks stations from digital broadcasting. |
| **[Local]**<br>[Off]<br>**FM:** [Level1] [Level2] [Level3] [Level4]<br>**AM:** [Level1] [Level2] | Local seek tuning allows you to only tune into radio stations with sufficiently strong signals.<br>**NOTE**<br>[Level4] for FM and [Level2] for AM are available only with the stations with the strongest signals. |

# Disc

## Inserting and ejecting a disc

You can play a normal music CD, Video-CD, or DVD-Video using the built-in drive of this product.

**⚠ WARNING**

Keep hands and fingers clear of this product when opening, closing, or adjusting the LCD panel. Be especially cautious of children's hands and fingers.

**⚠ CAUTION**

Do not insert anything other than a disc into the disc-loading slot.

### Inserting a disc

1 Press [⏏].

2 Touch [⊙⏏] to open the LCD panel.

3 Insert a disc into the disc-loading slot.
The source changes and then playback will start.

**NOTE**

If the disc is already set, select [Disc] as the playing source.

### Ejecting a disc

1 Press [⏏].

2 Touch [⊙⏏] to open the LCD panel.

3 Remove the disc and press [⏏].

## Basic operation

**TIPS**

- By pressing [⊟] then touch [⏮] or [⏭], you can also skip files/chapters forward or backward.
- By pressing [⊟] then touch and hold [⏮] or [⏭], you can also perform fast reverse or fast forward.
- If a Video-CD with PBC (playback control) On is being played, [PBC On] appears.
- You can set the screen size for the video image (page 60).

English

## Audio source

### Audio source screen 1

| | |
|---|---|
| ▶/II | **Switches between playback and pause.** |
| ⏮ ⏭ | **Skips files forward or backward.** |
| ☰ | **Selects a track from the list.**<br>Touch a track on the list to play back. |

### Audio source screen 2

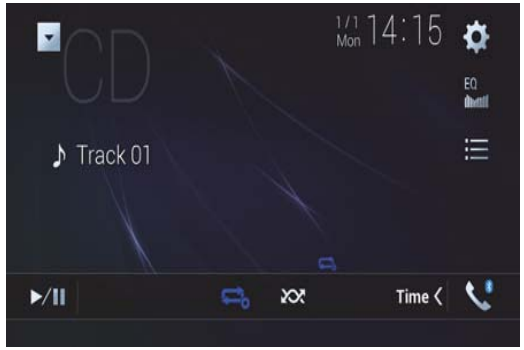


| | |
|---|---|
| 🔁 🔂 | **Sets a repeat play for the current disc/the current track.** |
| 🔀 | **Plays or does not play tracks in random order.** |

## Video source

### ⚠ CAUTION

For safety reasons, video images cannot be viewed while your vehicle is in motion. To view video images, stop in a safe place and apply the parking brake.

### Video source screen 1

| | |
|---|---|
| ① | **Hides the touch panel keys.**<br>To display the keys again, touch anywhere on the screen. |
| ◀◀ ▶▶ | **Performs fast reverse or fast forward.**<br>Touch again to change the playback speed. |
| ■ | **Stops playback.** |
| II▶ | **Performs frame-by-frame playback.**<br>**Performs slow-motion playback.**<br>Each time you touch II▶, it changes the speed in four steps in the following order: 1/16 -> 1/8 -> 1/4 -> 1/2 |
| MENU TOP MENU | **Displays the DVD menu.**<br>**NOTE**<br>This function may not work properly with some DVD disc content. In that case, use touch panel keys to operate the DVD menu. |
| 01 OFF | **Switches the audio/subtitle language.** |

| | |
|---|---|
| | **Searches for the part you want to play.**<br>Touch [Title], [Chapter], [10key], or [Track] then input the desired number from [0] to [9].<br>To start playback from the number you registered, touch [↵].<br>**TIPS**<br>• To cancel an input number, touch [C].<br>• For DVD-Videos, you can select [Title], [Chapter] or [10Key].<br>• For Video-CDs, you can select [Track] or [10key].* |
| | **Skips files/chapters forward or backward.** |
| | **Performs fast reverse or fast forward.** |

* PBC (playback control) only

## Video source screen 2

| | |
|---|---|
| | **Selects the audio output from [L+R], [Left], [Right], [Mix].**<br>This function is available for Video-CDs and DVDs recorded with LPCM audio. |
| | **Changes the viewing angle (Multi-angle).**<br>This function is available for DVDs featuring multi-angle recordings. |
| | **Sets a repeat play for all files/the current chapter/the current title.** |
| | **Displays the DVD menu keypad.**<br>If items on the DVD menu appear, the touch panel keys may overlay them. If so, select an item using these touch panel keys.<br>Touch [◀], [▶], [▲], or [▼] to select the menu item then touch [↵].<br>**NOTE**<br>The way to display the menu differs depending on the disc.<br>**TIP**<br>If you touch [ ], you can operate the DVD menu directly. |
| | **Resumes playback (Bookmark).**<br>This function is available for DVD-Video. You can memorize one point as a Bookmark for a disc (up to five discs). To clear the bookmark on the disc, touch and hold this key. |
| Return | **Returns and begins playback from the specified point.**<br>This function is available for DVD-Video and Video-CDs featuring PBC (playback control). |

# Compressed files

## Inserting and ejecting media

You can play compressed audio, compressed video, or still image files stored in a disc or an external storage device.

**⚠ WARNING**

Keep hands and fingers clear of this product when opening, closing, or adjusting the LCD panel. Be especially cautious of children's hands and fingers.

**⚠ CAUTION**

- Do not insert anything other than a disc into the disc-loading slot.
- Do not insert anything other than SD memory cards into the SD card slot.
- Ejecting an SD memory card during data transfer can damage the SD memory card. Be sure to eject the SD memory card by the procedure described in this manual.
- Do not press ⏏ when an SD memory card is not fully inserted. Doing so may damage the card.
- Do not press ⏏ before an SD memory card has been completely removed. Doing so may damage the card.

### Inserting a disc

1 **Press ⏏.**

2 **Touch ⊙⏏ to open the LCD panel.**

3 **Insert a disc into the disc-loading slot.**
The source changes and then playback will start.

**NOTE**

If the disc is already set, select [Disc] as the playing source.

### Ejecting a disc

1 **Press ⏏.**

2 **Touch ⊙⏏ to open the LCD panel.**

3 **Remove the disc and press ⏏.**

### Inserting an SD memory card

1 **Press ⏏.**

2 **Touch ▯⏏ to open the LCD panel.**

3 **Insert an SD memory card into the SD card slot.**

4 **Press ⏏.**

**NOTES**

- This system is not compatible with the Multi Media Card (MMC).
- Compatibility with all SD memory cards is not guaranteed.
- This product may not achieve optimum performance with some SD memory cards.

### Ejecting an SD memory card

1 **Press ⏏.**

2 **Touch ▯⏏ to open the LCD panel.**

3 **Press the middle of the SD memory card gently until it clicks.**

4 **Pull the SD memory card out straight.**

5 **Press ⏏.**

### Plugging a USB storage device

1 **Pull out the plug from the USB port of the USB cable.**

2 **Plug a USB storage device into the USB cable.**

**NOTES**

- This product may not achieve optimum performance with some USB storage devices.
- Connection via a USB hub is not possible.
- A USB cable is required for connection.

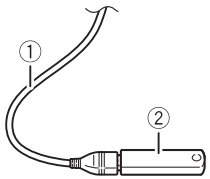


| | |
|---|---|
| ① | **USB cable** |
| ② | **USB storage device** |

## Unplugging a USB storage device

**1 Pull out the USB storage device from the USB cable.**

**NOTES**
- Check that no data is being accessed before pulling out the USB storage device.
- Turn off (ACC OFF) the ignition switch before unplugging the USB storage device.

# Starting procedure

## For Disc

**1 Insert the disc (page 26).**

**TIP**
If the disc is already set, select [Disc] as the playing source.

## For USB/SD

**1 Insert the SD memory card into the SD card slot or plug the USB storage device into the USB connector.**

**2 Press [⊞] then touch [AV].**

**3 Touch [USB] or [SD].**
Playback is performed in order of folder numbers. Folders are skipped if they contain no playable files.

**NOTES**
- For details on inserting SD card see on (page 26).
- For details on plugging USB storage device, see on Plugging a USB storage device (page 26).

# Basic operation

**TIPS**
- By pressing [⊟] then touch [⏮] or [⏭], you can also skip files/chapters forward or backward.
- By pressing [⊟] then touch and hold [⏮] or [⏭] on the audio or video file, you can also perform fast reverse or fast forward.
- You can set the screen size for the video and image files (page 60).

## Audio source

### Audio source screen 1 (Example: USB)

| | |
|---|---|
| ① | **Displays the link search screen.**<br>Touch the song to play back followed by touching the song information, after switching to Music Browse mode (page 28).<br>**TIP**<br>If you touch the artwork, the list of songs in the album is displayed.<br>**NOTE**<br>This function is available for the external storage device (USB, SD) only. |
| [▶/II] | **Switches between playback and pause.** |
| [icon] | **Switches the following media file types.**<br>**[Music]:** Compressed audio files<br>**[Video]:** Compressed video files<br>**[Photo]:** Image files |
| [⏮] [⏭] | **Skips files forward or backward.** |
| [ⓘ] | **Switches the current music information display.** |
| [≡] | **Selects a file from the list.**<br>Touch a file on the list to playback.<br>**TIP**<br>Touching a folder on the list shows its contents. You can play a file on the list by touching it.<br>**NOTE**<br>When you play compressed audio files stored in an external storage device (USB, SD), you can search for a file using Music Browse (page 28). |

English

### Audio source screen 2 (Example: USB)

| | |
|---|---|
| | **Selects the previous folder or the next folder.** |
| | **Sets a repeat play range for all files/the current folder/the current file.** |
| | **Plays files or does not play in random order.** |

#### ▸Selecting a file using Music Browse mode

You can select files to play back using the category list if the files contain tag information.

**NOTES**

- This function is available for the external storage device (USB, SD) only.
- Music Browse mode cannot be held once the power is turned off.

**1** **Touch** [≡].

**2** **Touch the [Tag] tab.**

**3** **Touch the desired category to display the file list.**

**4** **Touch the item.**
Refine the item until the desired song title or file name is displayed on the list.

**5** **Touch the desired song title or file name to play back.**
If the selection made with Music Browse has been canceled, you can switch to Music Browse mode again by touching the [Tag] tab on the file/folder list screen and touching the desired track.

**TIP**

Once the database is created in the USB storage, there is no need to create the database again as long as the same contents are saved. To enter the Music Browse mode directly, touch [≡] and then touch [Tag] before selecting the song.

## Video source

### ⚠ CAUTION

For safety reasons, video images cannot be viewed while your vehicle is in motion. To view video images, stop in a safe place and apply the parking brake.

### Video source screen (Example: USB)

| | |
|---|---|
| ① | **Hides the touch panel keys.**<br>To display the keys again, touch anywhere on the screen. |
| ▶/II | **Switches between playback and pause.** |
| | **Switches the following media file types.**<br>**[Music]:** Compressed audio files<br>**[Video]:** Compressed video files<br>**[Photo]:** Image files |
| ◀◀ ▶▶ | **Performs fast reverse or fast forward.**<br>Touch again to change the playback speed. |
| ■ | **Stops playback.** |
| II▶ | **Performs frame-by-frame playback.**<br>**Performs slow-motion playback.** |

| | |
|---|---|
| | **Sets a repeat play range for all files/the current folder/the current file.** |
| | **Switches the audio/subtitle language.** |
| | **Selects a file from the list.**<br>Touch a file on the list to playback.<br>**TIP**<br>Touching a folder on the list shows its contents. You can play a file on the list by touching it. |
| | **Skips files forward or backward.** |
| | **Performs fast reverse or fast forward.** |

## Still image source

**TIPS**

- Image files are not displayed in the rear display.
- By pressing [ ] then touch and hold [⏮] or [⏭] on the still image file, you can search through 10 image files at a time. If the file currently being played is the first or last file in the folder, the search is not performed.

### Still image screen

| | |
|---|---|
| ① | **Hides the touch panel keys.**<br>To display the keys again, touch anywhere on the screen. |

| | |
|---|---|
| | **Switches between playback and pause.** |
| | **Switches the following media file types.**<br>**[Music]:** Compressed audio files<br>**[Video]:** Compressed video files<br>**[Photo]:** Image files |
| | **Skips files forward or backward.** |
| | **Selects the previous folder or the next folder.** |
| | **Rotates the displayed picture 90° clockwise.** |
| | **Sets a repeat play range for all files/the current folder.** |
| | **Plays all files in the current repeat play range or does not play them in random order.** |
| | **Selects a file from the list.**<br>Touch a file on the list to playback.<br>**TIP**<br>Touching a folder on the list shows its contents. You can play a file on the list by touching it. |

# iPod

## Connecting your iPod

When connecting an iPod to this product, the settings are automatically configured according to the device to be connected.

**NOTES**

- Depending on the generation or version of the iPod, some functions may not be available.
- Do not delete the Apple Music® app from your iPod since some functions may not be available.
- When connecting an iPhone or iPod touch, quit all applications before connecting the device.

**1** **Connect your iPod via USB.**

**2** **Press [⊞] then touch [AV].**

**3** **Touch [iPod].**

**NOTE**

For details on USB connection, refer to the Installation Manual.

## Basic operation

**TIPS**

- By pressing [⊟] then touch [⏮] or [⏭], you can also skip files forward or backward.
- By pressing [⊟] then touch and hold [⏮] or [⏭], you can also perform fast reverse or fast forward.

**NOTE**

Skipping backward, fast reverse and fast forward are not available while playing Apple Music Radio.

## Audio source

### Audio source screen 1

| | |
|---|---|
| ① | **Displays the link search screen.**<br>Select a song from the list related to the song currently playing.<br>**TIP**<br>If you touch the artwork, the list of songs in the album is displayed.<br>**NOTE**<br>This function is not available while playing Apple Music Radio. |
| [▶/II] | **Switches between playback and pause.** |
| [⏮] [⏭] | **Skips files forward or backward.** |
| [☰] | **Selects a song from the list.**<br>Touch the category then the title of the list to playback of the selected list.<br>**TIPS**<br>• If you use English as the system language, the alphabet search function is available. Touch the initial search bar to use this function.<br>• When you touch Apple Music Radio station in the list screen, Apple Music Radio screen appears (page 31).<br>**NOTES**<br>• Depending on the generation or version of the iPod, some functions may not be available.<br>• Only 16 000 songs in the iPod are available in the list if the iPod has more than 16 000 songs. Available songs depend on the iPod. |

### Audio source screen 2

| | |
|---|---|
| ① | **Changes the audiobook speed.**<br>Normal—Fast—Slow<br>**NOTE**<br>The audiobook speed icon may not change depending on the connected iPod/iPhone. |
| | **Sets a repeat play range for all in the selected list/the current song.** |
| | **Plays songs within the selected list/album randomly.** |

## Apple Music® Radio source

**Important**

Apple Music Radio may not be available in your country or region. For details about Apple Music Radio, visit the following site: http://www.apple.com/music/

**NOTE**

This function is only available when using the iPod function with an iPhone 7, iPhone 7 Plus, iPhone SE, iPhone 6s, iPhone 6s Plus, iPhone 6, iPhone 6 Plus, iPhone 5s, iPhone 5, iPhone 5c, or iPod touch (5th, 6th generation).

1 Touch [≡].

2 Touch [Radio].

### Apple Music Radio screen

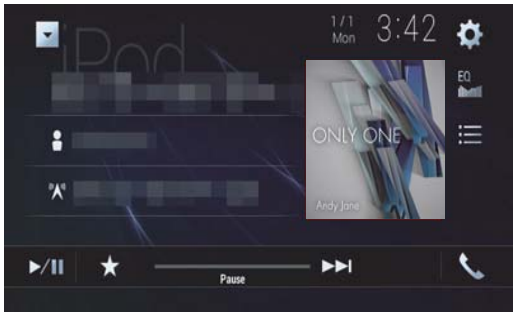


| | |
|---|---|
| ▶/II | **Switches between playback and pause.** |
| ★ | **Displays the pop-up menu for Apple Music Radio.**<br>• Touch [Play More Like This] to play back songs similar to the current song.<br>• Touch [Play Less Like This] to set it not to play back the current song again.<br>• Touch [Add to iTunes Wish List] to add the current song to the iTunes wish list.<br>**NOTE**<br>This function may not be used depending on your Apple Music account status. |
| ▶▶I | **Skips tracks forward.** |

# AppRadio Mode +

You can operate iPhone or smartphone applications with finger gestures such as tapping, dragging, scrolling, or flicking on the screen of this product.

**Compatible iPhone models**
iPhone 5, 5c, 5s, 6, 6 Plus, 6s, 6s Plus, SE, 7, 7 Plus

**Compatible smartphone (Sound from AppRadio Mode + on some Android devices cannot be heard from the speakers of this unit.) models**
For details about Android device compatibility with this product, refer to the information on our website.

**NOTES**

- The compatible finger gestures vary depending on the application for an iPhone or a smartphone.
- Copyright protected files such as DRM cannot be played.
- AppRadio Mode + may be referred to as AppRadio Mode.

**⚠ WARNING**

Certain uses of the iPhone or smartphone may not be legal while driving in your jurisdiction, so you must be aware of and obey any such restrictions. If in doubt as to a particular function, only perform it while the car is parked. No feature should be used unless it is safe to do so under the driving conditions you are experiencing.

## Using AppRadio Mode +

**Important**

- To use AppRadio Mode +, install the AppRadio app on the iPhone or smartphone in advance. For details about the AppRadio app, visit the following site: http://www.pioneerelectronics.com/PUSA/Car
- Be sure to read Using app-based connected content (page 71).
- Content and functionality of compatible applications are the responsibility of the App providers.
- In AppRadio Mode +, usage is limited while driving, with availability of functions and content determined by the App providers.
- AppRadio Mode + allows access to applications other than those listed, subject to limitations while driving.
- PIONEER IS NOT RESPONSIBLE AND DISCLAIMS LIABILITY FOR THIRD PARTY (NON-PIONEER) APPS AND CONTENT, INCLUDING WITHOUT LIMITATION ANY INACCURACIES OR INCOMPLETE INFORMATION.

## Starting procedure

When connecting an iPhone or a smartphone to this product, settings are required according to the connected device. For details, refer to Setup for iPod/iPhone or smartphone (page 20).

**TIPS**

- Touch the desired application icon after the AppRadio app is launched.
- If you connect your device to this product while an AppRadio Mode + compatible application is already running, the application operation screen will appear on this product.
- The desired application is launched, and the application operation screen appears.
- Press ⊞ to go back to the top menu screen.

### AppRadio Mode +

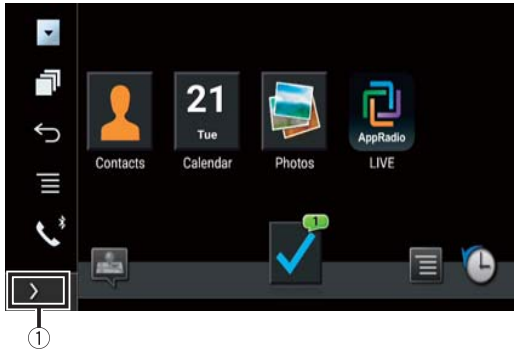


| | |
|---|---|
| ① | **Displays the current source.** |
| | **Displays the launcher application screen.** |
| | **Displays the previous screen.** |
| | **Displays the menu screen.** |

- Press [ ] then touch [ ] to hide the AppRadio Mode + SideControlBar.
- Press [ ] then touch [ ] again to display the AppRadio Mode + SideControlBar again.
- [ ] and [ ] are not available depending on the type of device.

### For iPhone users

**1 Connect your iPhone to this product via USB.**
Refer to the Installation Manual.

**2 Press [ ].**

**3 Touch [ ].**

**4 Touch [AppRadio Mode].**

**5 Touch desired icon in the tab.**
The AppRadio app is launched.

### For smartphone (Android) users

**NOTE**
The video playback capability depends on the connected Android device.

**1 Unlock your smartphone and connect it to this product via USB.**
Refer to the Installation Manual.

**2 Press [ ].**

**3 Touch [ ].**

**4 Touch [AppRadio Mode].**

**5 Touch desired icon in the tab.**
The AppRadio app is launched.

## Using the keyboard (for iPhone users)

When you tap the text input area of an application for iPhone, a keyboard will be displayed on the screen. You can input desired text directly from this product.

**NOTES**
- This function may not be available depending on your iPhone.
- This function is only available in AppRadio Mode + on the iPhone.

**⚠ CAUTION**
For your safety, the keyboard functionality is only available when the vehicle is stopped and the parking brake is engaged.

**1 Start up the AppRadio Mode +.**

**2 Touch the text input area on the application operation screen.**
A keyboard for entering text appears.

**TIP**
You can select the keyboard language (page 51).

## Using the audio mix function

You can output the audio mixing AV source and an application for iPhone or smartphone when AppRadio Mode + is used.

**NOTE**
Depending on the application or AV source, this function may not be available.

**1 Start up the AppRadio Mode +.**

**2 Press VOL (+/-).**
The audio mix menu will be displayed on the screen.

**NOTES**
- The audio mix menu is displayed for four seconds. If the screen disappears, press **VOL** (+/-) again. The screen reappears.
- The AV operation screen and the Application screen can be switched by pressing [ ].

| | |
|---|---|
| ① | **Touch to mute. Touch again to cancel mute.** |
| ② | **Sets whether to switch the sound mix function on or off.**<br>• Left tab:<br>The audio mix function is enabled (mix on) and the App volume is displayed.<br>• Right tab:<br>The audio mix function is disabled (mix off). This is not displayed on the AV operation screen. |
| ③ | **Adjusts the application audio volume.**<br>• The App volume is not displayed when the right tab is selected.<br>• You cannot adjust the volume of the main sound on the screen. Press **VOL (+/-)** to adjust the volume of the main sound. |

**TIP**
The AV operation screen and the Application screen can be switched by pressing [ ].

# Apple CarPlay

You can operate iPhone applications with finger gestures such as tapping, dragging, scrolling, or flicking on the screen of this product.

**Compatible iPhone models**
For details about compatibility of iPhone models, refer to the following website.
http://www.apple.com/ios/carplay

**NOTE**
The compatible finger gestures vary depending on the application for the iPhone.

**⚠ WARNING**
Certain uses of the iPhone may not be legal while driving in your jurisdiction, so you must be aware of and obey any such restrictions. If in doubt as to a particular function, only perform it while the car is parked. No feature should be used unless it is safe to do so under the driving conditions you are experiencing.

## Using Apple CarPlay

**Important**
Apple CarPlay may not be available in your country or region.
For details about Apple CarPlay, visit the following site:
http://www.apple.com/ios/carplay
- The content and functionality of the supported applications are the responsibility of the App providers.
- In Apple CarPlay, usage is limited while driving, with availability of functions and content determined by the App providers.
- Apple CarPlay allows access to applications other than those listed that are subject to limitations while driving.
- PIONEER IS NOT RESPONSIBLE AND DISCLAIMS LIABILITY FOR THIRD PARTY (NON-PIONEER) APPS AND CONTENT, INCLUDING WITHOUT LIMITATION ANY INACCURACIES OR INCOMPLETE INFORMATION.

## Setting the driving position

To achieve optimum usability of Apple CarPlay, set the driving position setting correctly according to the vehicle. The setting will be applied the next time an Apple CarPlay compatible device is connected to this product.

**1** **Press [⊞].**

**2** **Touch [⚙] then [🔧].**
The system setting screen appears.

**3** **Touch [Smartphone-related Settings].**

**4** **Touch [Driving Position].**
[**Left**]
Select for a left-hand drive vehicle.
[**Right**]
Select for a right-hand drive vehicle.

## Starting procedure

When connecting an iPhone to this product, settings are required according to the connected device. For details, refer to Setup for iPod/iPhone or smartphone (page 20).

### Wired connection

**1** **Connect an Apple CarPlay compatible device to this product via USB.**

**2** **Press [⊞].**

**3** **Touch [📱].**

**4** **Touch [Apple CarPlay].**

**5** **Touch the Apple CarPlay icon in the tab.**
The application screen appears.

### Wireless connection

Before using Apple CarPlay wirelessly, connect the device to this product via Bluetooth and turn on Apple CarPlay in the Bluetooth setting menu of the device (page 13).

**1** **Turn on the Wi-Fi function on the device.**

**2** **Press [⊞].**

**3** **Touch [📱].**
The device search screen appears.
Touch [⇄] then skip to step 4 since the device list screen appears if Apple CarPlay had previously been used wirelessly with the device.

**NOTE**
The unit cannot detect the device unless the Bluetooth or Apple CarPlay setting menu is displayed on the iPhone screen.

**4** **Touch [🔍].**

**5** **Touch a desired device on the screen.**

The unit configures the connection then start the application.

**TIP**

You can also start Apple CarPlay with a desired device by opening the Bluetooth or Apple CarPlay setting menu while displaying the device search or device list screen.

**TIP**

You can use Siri function by pressing [🎙] once Apple CarPlay is activated.

**NOTES**

- For details on USB connection, refer to the Installation Manual.
- If an Apple CarPlay compatible device has been connected and another screen is displayed, touch [Apple CarPlay] on the top menu screen to display the Application menu screen.
- The Bluetooth connection with the Apple CarPlay compatible device will be terminated automatically if Apple CarPlay is turned on. While Apple CarPlay is turned on, only a Bluetooth audio connection will be possible for devices other than the device connected via Apple CarPlay.
- Hands-free phoning via Bluetooth wireless technology is not available while Apple CarPlay is on. If Apple CarPlay is turned on during a call on a cellular phone other than an Apple CarPlay compatible device, the Bluetooth connection will be terminated after the call ends.

## Adjusting the volume

You can adjust the guidance volume separately from the main sound volume when Apple CarPlay is used.

**1** **While Apple CarPlay is activated, press VOL (+/-).**

The volume menu will be displayed on the screen.

| | |
|---|---|
| ① | **Touch to mute. Touch again to cancel mute.** |
| ② | **Touch [+]/[-] to adjust the guidance volume.** |
| ③ | **Displays the main sound volume. To adjust the main sound volume, press VOL (+/-) on the unit.** |

**NOTE**

The volume menu is displayed for four seconds. If the menu disappears, press **VOL (+/-)** again. The menu reappears.

# Android Auto™

You can operate Android applications with finger gestures such as tapping, dragging, scrolling, or flicking on the screen of this product.

**Compatible Android devices**

For details about compatibility of Android models, refer to the following website.
https://support.google.com/androidauto

**NOTE**

The compatible finger gestures vary depending on the application for the smartphone.

**⚠ WARNING**

Certain uses of the smartphone may not be legal while driving in your jurisdiction, so you must be aware of and obey any such restrictions. If in doubt as to a particular function, only perform it while the car is parked. No feature should be used unless it is safe to do so under the driving conditions you are experiencing.

## Using Android Auto

**Important**

Android Auto may not be available in your country or region.
For details about Android Auto, please refer to the Google support site:
http://support.google.com/androidauto

- The content and functionality of the supported applications are the responsibility of the App providers.
- In Android Auto, usage is limited while driving, with availability of functions and content determined by the App providers.
- Android Auto allows access to applications other than those listed that are subject to limitations while driving.
- PIONEER IS NOT RESPONSIBLE AND DISCLAIMS LIABILITY FOR THIRD PARTY (NON-PIONEER) APPS AND CONTENT, INCLUDING WITHOUT LIMITATION ANY INACCURACIES OR INCOMPLETE INFORMATION.

## Setting the driving position

To achieve optimum usability of Android Auto, set the driving position setting correctly according to the vehicle. The setting will be applied the next time an Android Auto compatible device is connected to this product.

**1** **Press [⊞].**

**2** **Touch [⚙] then [🔧].**

The system setting screen appears.

**3** **Touch [Smartphone-related Settings].**

**4** **Touch [Driving Position].**

[**Left**]
Select for a left-hand drive vehicle.

[**Right**]
Select for a right-hand drive vehicle.

# Starting procedure

When connecting a smartphone to this product, settings are required according to the connected device. For details, refer to Setup for iPod/iPhone or smartphone (page 20).

## Wired connection

**1** **Connect an Android Auto™ compatible device to this product via USB.**

**2** **Press** [⊞].

**3** **Touch** [▯].

**4** **Touch [Android Auto].**

**5** **Touch the Android Auto icon in the tab.**
A Bluetooth connection with the Android Auto compatible device is automatically established and a Bluetooth connection with any other devices are terminated.

## Wireless connection

Before using Android Auto wirelessly, connect the device to this product via Bluetooth (page 13).

**1** **Turn on the Wi-Fi function on the device.**

**2** **Press** [⊞].

**3** **Touch** [▯].
The device search screen appears.
Touch [⇄] then skip to step 4 since the device list screen appears if Android Auto had previously been used wirelessly with the device.

**NOTE**
The unit cannot detect the device unless the Bluetooth setting menu is displayed on the smartphone screen.

**4** **Touch** [🔍].

**5** **Touch a desired device on the screen.**
The unit configures the connection then start the application.

**TIP**
You can use voice recognition function by pressing [🎤] once Android Auto is activated.

**NOTES**
- For details on USB connection, refer to the Installation Manual.
- If twenty devices are already paired, the message confirming whether to delete the registered device is displayed. If you want to delete the device, touch [Agree]. If you want to delete other device, touch [BT Settings] and delete the devices manually (page 14).
- If Android Auto is turned on during a call on a cellular phone other than the Android Auto compatible device, the Bluetooth connection will switch to the Android Auto compatible device after the call.

# Adjusting the volume

You can adjust the guidance volume separately from the main sound volume when Android Auto is used.

**1** **While Android Auto is activated, press VOL (+/-).**
The volume menu will be displayed on the screen.

| | |
|---|---|
| ① | **Touch to mute. Touch again to cancel mute.** |
| ② | **Touch [+]/[-] to adjust the guidance volume.** |
| ③ | **Displays the main sound volume. To adjust the main sound volume, press VOL (+/-) on the unit.** |

**NOTE**
The volume menu is displayed for four seconds. If the menu disappears, press **VOL (+/-)** again. The menu reappears.

# Setting the auto-launch function

If this function is set to on, Android Auto will launch automatically when an Android Auto compatible device is connected to this product.

**NOTE**

Android Auto will launch automatically only when an Android Auto compatible device is correctly connected to this product.

1 **Press [ ].**

2 **Touch [ ] then [ ].**

3 **Touch [Smartphone-related Settings].**

4 **Touch [Android Auto Auto-launch] to switch [On] or [Off].**

# Pandora®

Pandora Music is a music service not affiliated with Pioneer. More information is available at http://www.pandora.com.
The Pandora mobile application is available for iPhone and smartphones. Please visit www.pandora.com/everywhere/mobile for the latest compatibility information.

**⚠ WARNING**

Certain uses of the iPhone or smartphone may not be legal while driving in your jurisdiction, so you must be aware of and obey any such restrictions.
If in doubt as to a particular function, only perform it while the car is parked.
No feature should be used unless it is safe to do so under the driving conditions you are experiencing.

**Important**

Create a free or a paid account online. You can create the account in the Pandora application from your iPhone or smartphone, or from the website (http://www.pandora.com/account/register).

**Limitations:**

- The Pandora service is subject to change without notice. The service could be affected by any of the following: firmware version of the iPhone or smartphone, firmware version of the Pandora application, changes to the Pandora music service.
- Certain functions of the Pandora service are not available when accessing the service through Pioneer car audio/video products. They include, but are not limited to the following: sending information about current stations, buying tracks from iTunes App Store or Google Play, viewing additional text information, logging in to Pandora, adjusting Cell Network Audio Quality.

**NOTE**

In this chapter, iPhone and iPod touch will be referred to as "iPhone".

## Listening to Pandora

Update the firmware of the Pandora application to the latest version before use.

1 **Unlock the mobile device and connect it to this product.**
- iPhone via USB or Bluetooth
- Smartphone via Bluetooth

2 **Press [ ] then touch [AV].**

3 **Touch [Pandora].**

4 **Launch the Pandora application on the mobile device and start playback.**

**NOTES**

- For details on Bluetooth connection, see page 13.

• For details on USB connection, refer to the Installation Manual.

# Basic operation

## Playback screen 1

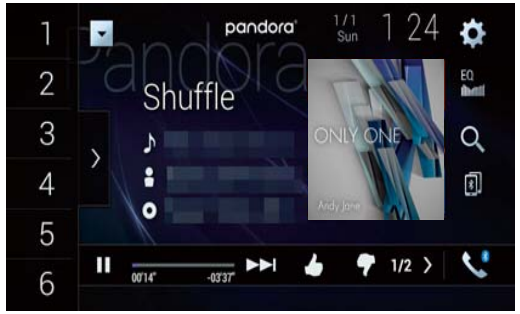


| | |
|---|---|
| 1 … 6 | **Recalls the preset station stored to a key from the memory.** |
| | **Stores the current station to a key.** |
| › | **Displays the preset station list.**<br>Select an item on the list ([1] to [6]) to switch to the preset station. |
| ❚❚ | **Switches between playback and pause.** |
| ▶▶❙ | **Skips tracks forward.**<br>**TIP**<br>By pressing [ ] then touch [▶▶], you can skip songs forward. |
| * | **Gives a Thumbs Up to the playing track.** |
| * | **Gives a Thumbs Down to the playing track and skips to the next track.** |
| | **Switches among connected devices.** |
| | **Selects a Pandora station from the list.**<br>• [ ]: Switches to the station list.<br>• [ ]: Switches to the genre list.<br>• [ ]: Plays only one track based on particular musical characteristics from several shuffled stations.<br>• [ ]: Deletes the station.<br>• **A-Z**: Sorts the items in the list alphabetically.<br>• **Date**: Sorts the items in the list in the order of the dates.<br>**TIP**<br>Shared stations are indicated by [ ]. |

* [ ] and [ ] are not available when using a shared station.

## Playback screen 2

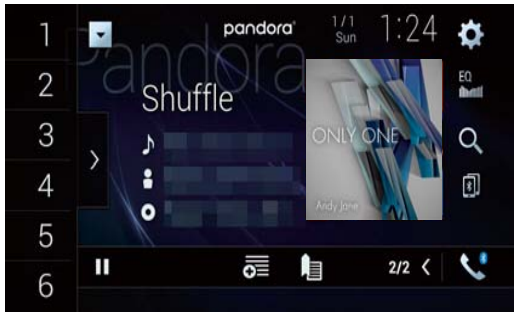


| | |
|---|---|
| | **Creates a new station.**<br>Touch [Track] or [Artist] to create a new station. |
| | **Adds information for the track currently playing to bookmarks.** |

# SiriusXM® Satellite Radio

Only SiriusXM® brings you more of what you love to listen to, all in one place. Get over 140 channels, including commercial-free music plus the best sports, news, talk, comedy, and entertainment. Welcome to the world of satellite radio. A SiriusXM Connect Vehicle Tuner and Subscription are required. For more information, visit the website (www.siriusxm.com).
To take full advantage of all the SiriusXM capabilities, such as TuneMix™, SportsFlash™ and Traffic & Weather Now™, please use the SXV300 tuner or later version (sold separately). Other tuners are compatible but may limit the features.

## Subscribing to the SiriusXM Satellite Radio service

**1** **Press [⊞] then touch [AV].**

**2** **Touch [SiriusXM].**
You should be able to tune in to Channel 1. If you cannot get Channel 1, ensure that your SiriusXM Connect Vehicle Tuner is installed correctly.

**3** **Switch to Channel 0 and check the Radio ID.**
The SiriusXM Radio ID can be found by tuning in to Channel 0.
In addition, the Radio ID is located on the bottom of the SiriusXM Connect Vehicle Tuner and its packaging.
You will need this number to activate your subscription.

**NOTE**
The SiriusXM Radio ID does not include the letters I, O, S, or F.

**4** **Activate the service either online or by phone.**

**TIP**
In the USA, you can activate online or by calling SiriusXM Listener Care:
- Visit the website
  www.siriusxm.com/activatenow
- Call SiriusXM Listener Care at
  1-866-635-2349

For Canadian subscriptions, please contact:
- Visit the website
  www.siriusxm.ca/activatexm
  and click on "ACTIVATE RADIO" at the top right corner of the page, or call (1-877-438-9677).

**NOTES**
- The SiriusXM satellites will send an activation message to your tuner. When the tuner has received the message, [Subscription Updated] is displayed.
- The activation process usually takes 10 to 15 minutes, but it may take up to an hour. Your radio will need to be powered on and receiving the SiriusXM signal to receive the activation message.

## Listening to SiriusXM

**1** **Press [⊞] then touch [AV].**

**2** **Touch [SiriusXM].**

## Basic operation

**TIPS**
- By pressing [⊟] then touch [⏮] or [⏭], you can move the preset channels up or down on the current channel screen, and skip files forward or backward on the play time indicator screen.
- By pressing [⊟] then touch and hold [⏮] or [⏭], you can move channels up or down on the current channel screen, and perform fast reverse or fast forward on the play time indicator screen.
- On the Featured Favorites Band, the current broadcast frequency cannot be stored to a key (page 41).
- If fewer than two music channels are stored as presets, you cannot use the TuneMix function.
- [RADIO ID] is displayed when Channel 0 is selected.

### Current channel display (Live broadcast mode)

| | |
|---|---|
| ① | **Memorizes the current channel content information for the alert function (page 41).** |
| ② | **Selects a channel directly.** |
| 1 ⋮ 6 | **Recalls the preset channel stored to a key from the memory.** |
| | **Stores the current channel to a key.** |

| | |
|---|---|
| › | **Displays the preset channels.**<br>Select an item on the list ([1] to [6]) to switch to the preset channel. |
| Featured | **Selects a band.**<br>There are 4 bands. You can store 6 channels per band for a total of 24 presets. |
| Tune Scan | **Performs TuneScan™ (page 40).** |
| Tune Mix | **Switches TuneMix™ to on or off.**<br>You can use TuneMix™ to play a unique blend of songs from each of the music channels stored as presets on the current band.<br>**NOTES**<br>• When fewer than two music channels are stored as presets, you cannot use TuneMix™.<br>• Locked channels will not be used by TuneMix™ until the channels are unlocked by entering the parental control passcode.<br>• TuneMix™ is only compatible with SXV300 or later tuner models. |
| ◀ ▶ | **Performs channel number down/up.** |
| | **Performs fast channel number down/up.** |
| | **Switches to the channel broadcasting the traffic and weather information for the selected city (Traffic & Weather Now™).**<br>Touch the Traffic & Weather Now™ button and you will be able to hear the latest report for the selected city from the beginning.<br>To cancel Traffic & Weather Now™, touch ⮌.<br>**TIPS**<br>• Grayed out: Traffic and weather broadcast for your market is not yet available.<br>• With green dot: Latest report available, but not listened to yet.<br>• White: Latest report available to hear again.<br>• To listen to the information again, touch on the current channel display.<br>• If you have already selected the city, you can listen to the information only by touching .<br>**NOTES**<br>• To use this function, select the city in advance (page 42).<br>• The selected city can be changed in the Sirius XM settings (page 42).<br>• Traffic & Weather Now™ is only compatible with SXV300 or later tuner models. |
| Replay | **Switches between live broadcast mode and Replay Mode.** |

| | |
|---|---|
| | **Selects a channel from the list.**<br>Select the category name or the list of all channels then touch the desired channel.<br>To switch the display list, touch ⓘ.<br>**TIPS**<br>• The displayed list switches in the following order.<br>Channel Name—Artist Name—Song Title—Content Info<br>• If you touch Scan, you can scan each channel in the selected category.<br>**NOTES**<br>• The types of categories available depend on the types of channels available.<br>• It may take time to display the channel list depending on the SiriusXM reception condition. |

## Replay Mode (Time bar display)

| | |
|---|---|
| ❚❚ | **Switches between playback and pause.** |
| ◀◀ ▶▶ | **Performs content forward or backward.** |
| | **Performs fast forward or rewind.** |
| Live | **Switches between live broadcast mode and Replay Mode.** |

# TuneScan™

When you activate the TuneScan™ feature, you will hear a few seconds of the songs which have not been listened to from each of the music channels stored as presets on the current band.

**NOTES**

• When fewer than two music channels are stored as presets, you cannot use TuneScan™.

- TuneScan™ may take a few minutes to become available after the product is turned on or the preset band is changed.
- Tune Scan™ is compatible with SXV200 or later tuner models.

**1 Touch [Tune Scan] to display the following display.**

| | |
|---|---|
| ▶ | **Continues playing the current scanning song or channel.** |
| ⏮ ⏭ | **Skips to the previous/next song during TuneScan™ or to the previous/next channel during category scan.** |
| ✕ | **Cancels scan play and returns to the previous channel.** |

# SportsFlash™

SportsFlash™ will notify you when a big play happens during a game with one of your favorite sports teams.
Choose to tune in and hear the play unfold like it was live. Continue listening to the game, or you can return to your previous channel.
For details, see [SportsFlash] (page 42) and [SportsFlash List] (page 42) in SiriusXM settings.

**NOTE**

SportsFlash™ is only compatible with SXV300 or later tuner models.

# SmartFavorites

All preset channels will buffer the content to be used for Replay, TuneStart, TuneScan and TuneMix features.

**NOTE**

SmartFavorite is compatible with SXV200 or later tuner models.

# Using Featured Favorites Band

Featured Favorites are groups of channels that are created by the SiriusXM Programming department allowing you to discover new channels. Featured Favorite channels are dynamic and can change often, allowing you to discover new channels.
For details, see [Featured Favorites] and [Featured Band Update Messages] in SiriusXM settings (page 42).

## How to access

When there is a Featured Favorite, access it with the band key.

**1 Touch the band key.**

SXM1—SXM2—SXM3—FF

When there are multiple Featured Favorites, access them from the category list.
It is displayed at the bottom of the category list (page 40).

# Parental lock

The Parental Control feature allows you to limit access to any SiriusXM channels, including those with mature content. When enabled, the Parental Control feature requires you to enter a passcode to tune to the locked channels.
For details, see [Parental Control] in SiriusXM settings (page 42).

# Using the content alerts function

The song titles, artist names, and your favorite sport teams that you are listening to can be memorized on an alert list.
When a program that matches a keyword memorized to the alert list is broadcast, a beep sounds and a message is displayed.
For Details, see [Alert List](page 42) in SiriusXM settings .

**NOTES**

- You can register up to 50 keywords in the alert list.
- You can enable or disable alerts by setting the alert function.
- The radio will display an alert message when a matching artist, song, or team is found on another channel. Touch [Jump] to switch to the channel. If you touch [Stay], the channel will not switch.

## Memorizing the current contents

**1 On the current channel content information area, touch the item for which you want an alert.**

**2 Touch [OK] for the artist or song, or touch [Team1] or [Team2] for the game.**

**TIP**

To set the alert function, you can set up at [Alert List] (page 42) in the [SiriusXM Settings].

## SiriusXM settings

**1** **Press [ ].**

**2** **Touch [ ] then [ ].**

The system setting screen appears.

**3** **Touch [AV Source Settings].**

**4** **Touch [SiriusXM Settings].**

The menu items vary according to the source.

| Menu Item | Description |
|---|---|
| **[Tune Start]**<br>[On] [Off] | Start songs automatically from the beginning when you tune to one of your preset channels in the current preset band when TuneStart™ is turned on. |
| **[Parental Control]** | Enter the current passcode then touch [↵] to set this function (the default passcode is 0000).<br>• To edit the passcode, touch [Edit Code] then touch [↵] followed by entering the new passcode.<br>• To lock the channel, touch the appropriate channel. [🔒] appears and the channel is locked.<br>**TIPS**<br>• When you touch the locked channel, the channel is unlocked.<br>• When you touch [Clear All], all locked channels are unlocked. |
| **[Alert List]** | Select to activate the alert function of each memorized alert list by touching by [Alert On] or [Alert Off].<br>**TIPS**<br>• Touch [Delete All] to delete all items memorized to the alert list.<br>• If you touch and hold the list item, you can delete the item from the list. |
| **[Team Settings]** | Set to notify you when games involving your favorite sports teams are about to start.<br>**1 Select your favorite league in the list screen.**<br>**2 Touch your favorite team in your selected league to switch the alert on or off.** |
| **[Featured Favorites]**<br>[On] [Off] | Set to [On] to allow you to discover new channels created by the SiriusXM Programming department.<br>**NOTE**<br>If the Featured Favorite Band needs to update, the Featured Band Update message will appear. |
| **[Featured Band Update Messages]**<br>[On] [Off] | To be notified when the featured seasonal theme is updated.<br>**TIP**<br>To display [Featured Band Update Messages] at all times, [Featured Favorites] needs to be set to [On]. |
| **[SportsFlash]**<br>[On] [Off] | Activates the SportsFlash™ function.<br>• Touch [Play] to listen to the notified channel.<br>• Touch [Ignore] to stay tuned to the current channel.<br>• Touch [Cancel] to cancel notifications regarding the game. |
| **[SportsFlash List]** | Select favorite teams for SportsFlash™.<br>• Touch [Edit List] then select a league and team to set the favorite.<br>**TIPS**<br>• You can touch an item again to deselect it.<br>• If you want to remove all the teams you have set, touch [Clear All].<br>**Setting of priorities**<br>If you set many Favorite Teams, SportsFlash™ notifications can be received for up to 5 Favorite Teams at once. Set the priorities if more than six teams are set as Favorite Teams.<br>**1 Touch [Prioritize] on the team selection screen.**<br>**2 Select the five high priority teams from the selected favorite teams.** |
| **[City Setting]** | Select the city for the latest traffic and weather report in Traffic & Weather Now™. |
| **[SiriusXM Reset]** | Set to restore to the default SiriusXM settings by touching [Restore].<br>**⚠ CAUTION**<br>Do not turn off the engine while restoring the settings.<br>**NOTES**<br>• This setting is available only when you stop your vehicle in a safe place and apply the parking brake.<br>• The source is turned off and the Bluetooth connection is disconnected before the process starts. |

# HDMI

**⚠ CAUTION**

For safety reasons, video images cannot be viewed while your vehicle is in motion. To view video images, stop in a safe place and apply the parking brake.

**NOTE**

A High Speed HDMI® Cable (sold separately) is required for connection. For details, refer to the Installation Manual.

## Starting procedure

1 **Press [⊞] then touch [AV].**

2 **Touch [HDMI].**
The HDMI source screen appears.

## Basic operation

### HDMI source screen

| | |
|---|---|
| ① | **Hides the touch panel keys.**<br>To display the keys again, touch anywhere on the screen.<br>**TIP**<br>You can set the screen size for the video image (page 60). |

# AUX

You can display the video image output by the device connected to video input.

**⚠ CAUTION**

For safety reasons, video images cannot be viewed while your vehicle is in motion. To view video images, stop in a safe place and apply the parking brake.

**NOTES**

- A Mini-jack AV cable (CD-RM10) (sold separately) is required for connection. For details, refer to the Installation Manual.
- You can set the screen size for the video image (page 60).

## Starting procedure

1 **Press [⊞].**

2 **Touch [⚙] then [🔧].**

3 **Touch [Input/Output Settings].**

4 **Confirm that [AUX Input] is turned on.**

5 **Press [⊞] then touch [AV].**

6 **Touch [AUX].**
The AUX screen appears.

## Basic operation

### AUX screen

| | |
|---|---|
| ① | **Hides the touch panel keys.**<br>To display the keys again, touch anywhere on the screen.<br>**TIP**<br>You can set the screen size for the video image (page 60). |
| | **Switches between the video input and audio input.** |

# AV input

You can display the video image output by the device connected or the camera to video input. For details, refer to the Installation Manual.

**⚠ CAUTION**

For safety reasons, video images cannot be viewed while your vehicle is in motion. To view video images, stop in a safe place and apply the parking brake.

## Starting procedure

1. **Press [⊞].**
2. **Touch [⚙] then [🔧].**
3. **Touch [Input/Output Settings].**
4. **Touch [AV Input].**
5. **Touch [Source] for AV source or [Camera] for camera.**
6. **Press [⊞] then touch [AV].**
7. **Touch [AV] for AV source or [Camera View] for camera.**
   The image is displayed on the screen.

**NOTE**

If [Source] is selected, [2nd Camera Input] is automatically set to [Off] (page 50).

## Basic operation

### AV source screen

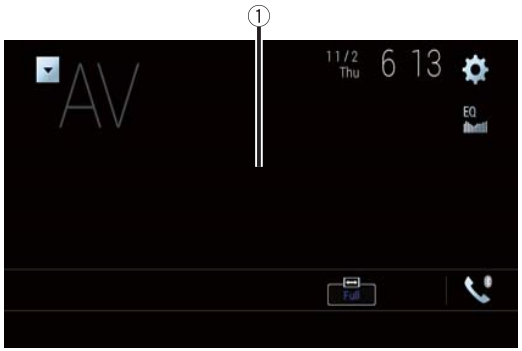


| | |
|---|---|
| ① | **Hides the touch panel keys.**<br>To display the keys again, touch anywhere on the screen. |

# Wireless Mirroring

(This function is available only for Android device.)
Wireless Mirroring is a wireless display designed to mirror your mobile device on this product screen via Wi-Fi connection.

## Starting procedure

Wireless Mirroring operations and procedures vary depending on the connected mobile device. Refer to the instruction manual that came with your mobile device.

**⚠ CAUTION**

For safety reasons, this function is available only when you stop your vehicle in a safe place and apply the parking brake.

**1** **Press [⊞].**

**2** **Touch [⚙] then [🔧].**

**3** **Touch [Wi-Fi Settings].**

**4** **Confirm that [Wi-Fi] is turned on.**

**5** **Press [⊞] then touch [AV].**

**6** **Touch [Mirroring].**
A connection is configured then the instruction message appears on the display.

**NOTES**

- When Apple CarPlay or Android Auto with wireless connection is activated, the connection swtiching confirmation screen appears. Touch [Yes] to proceed to Wireless Mirroring.
- When the Wi-Fi connection is set to [OFF], the connection confirmation screen appears. Touch [Start] to make the connection.

**7** **Make a Wireless Mirroring connection on the mobile device.**

**8** **Touch [Yes].**
The Wireless Mirroring screen appears.

## Basic operation

### Wireless Mirroring screen (Example)

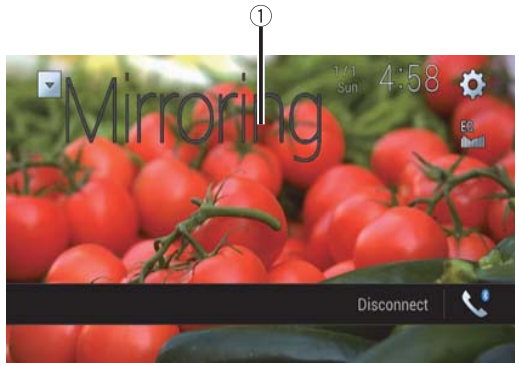


| | |
|---|---|
| ① | **Displays Full screen.** |
| [Disconnect] | **Disconnects Wireless Mirroring.** |

**NOTES**

- The screen shown in the example may differ from the connected mobile device.
- If the Android device is not ready for Miracast UIBC, you cannot perform touch operation.

# iDatalink

## Using iDatalink

You can access the satellite radio source provided for the vehicle. The vehicle information and many OEM systems such as steering wheel controls, warning chimes, driver safety systems, and etc. can be displayed on this product by connecting the optional iDatalink adapter. It is also possible to add visual screens such as gauges, vehicle information, climate control, and parking assist. However, an extra interface module is required to access these features.

**NOTE**

Since the type of module varies depending on the vehicle model, search for your vehicle at the following URL to determine what features are available for each module. Remember to select the correct radio model for accurate results.
http://maestro.idatalink.com/

**Important**

- For details about vehicle models that are compatible with the iDatalink adapter, refer to the information on our website.
- For information on installing the iDatalink adapter, refer to the install guide of the iDatalink adapter.
- After installing the iDatalink adapter, be sure to check the operations.
- Functions and displays vary depending on the vehicle model. For details of the functions available for each model, refer to the information on our website.
- Please note that the device number of this product and a computer with internet access are required to program your Maestro RR module. For troubleshooting information about iDatalink functions, visit the following website.
  http://maestro.idatalink.com/support

### Limitations

- The data is transmitted to this product from your vehicle system via the connected iDatalink adapter. Therefore, the actual data contents displayed on your product may be different from the contents on the screen described in this manual.
- When information on your vehicle or on the devices of your vehicle is sent from the iDatalink Maestro module, a screen notifying you of such information may pop up.

## Activating iDatalink Maestro

Before using and/or connecting the iDatalink Maestro adapter, you will need to first flash the Maestro RR module with the appropriate vehicle and head unit firmware.

**1** **Find the device number (12 alphanumeric characters) on the label on the packaging of this product or on the product itself.**

**2** **Access the following website and follow the on-screen instructions to configure the desired firmware.**
http://maestro.idatalink.com/

**NOTE**
When the serial number input is required, input the device number of this product.

**3** **Install the vehicle/head unit specific firmware on your iDatalink Maestro module.**

**4** **Connect this product to iDatalink Maestro, and then install this product to the vehicle.**
The iDatalink function will be active.

**NOTES**
- Device number input is required for updating the iDatalink Maestro module. Take a note of the device number as necessary.
- For details on installing the firmware, refer to iDatalink Maestro website.
- For details on connecting this product to iDatalink Maestro, refer to the Installation Manual.
- You can also check the device number on the [Firmware Information] screen of this product (page 52).

# Starting procedure

**1** **Connect the iDatalink Maestro adapter to this product.**
For details, refer to the Installation manual.

**2** **Press** [ ] **then touch** [AV].

**3** **Touch [Car Sources] or [Car Features].**
The touched menu screen appears.

## Using functions in Car Sources

These operations are almost similar to the built in AV sources of this product. For details of the operations, refer to the related pages.
- USB/iPod operations (page 26) (page 30)
- SiriusXM tuner operations (page 39)
- Bluetooth audio operations (page 16)
- Hands-free phone operations (page 14)

## Using functions in Car Features

You can check and operate the following screens after selecting [Car Features] in the starting procedure. Touch one of the icons on the left side of the screen to change the feature.

| | |
|---|---|
| | **Displays the Gauge screen.** |
| | **Displays the Vehicle Information screen.** |
| | **Displays the Climate screen.** |
| | **Displays the Parking Assist screen.** |

### Gauges screen

### Vehicle Information screen

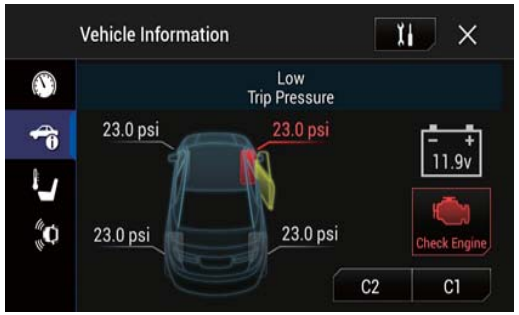


English

### Climate screen

### Parking Assist screen

## Displaying obstacle detection information

**⚠ CAUTION**

This function is intended solely to assist the driver's vision. It does not detect all dangers and obstacles and is not a substitute for your attentiveness, judgment, and care while parking your vehicle.

**NOTE**

This function is only available for vehicles equipped with a parking sensor system.

## iDatalink settings

1 Press [⊞].

2 Touch [⚙] then [🔧].

3 Touch [OEM Settings] or [OEM Volume Settings].
The setting screen for iDatalink appears.

| Menu Item | Description |
|---|---|
| [OEM Settings] | Setting for iDatalink function when the iDatalink adapter is connected to the unit. |
| [OEM Volume Settings] | Setting for iDatalink function volume when the iDatalink adapter is connected to the unit. |

# Settings

You can adjust various settings in the main menu.

## Displaying the setting screen

1 Press [ ].

2 Touch [ ].

3 **Touch one of the following categories, then select the options.**

- System settings (page 49)
- Theme settings (page 53)
- Audio settings (page 54)
- Video settings (page 58)
- Bluetooth settings (page 13)

## System settings

The menu items vary according to the source.

### [AV Source Settings]

| Menu Item | Description |
|---|---|
| **[Radio Settings]** | (page 23) |
| **[SiriusXM Settings]** | (page 42) |
| **[Bluetooth Audio]**<br>[On] [Off] | Setting Bluetooth audio source activation. |

### [Smartphone-related Settings]

| Menu Item | Description |
|---|---|
| **[Smartphone Setup]** | Setting the connected mobile device (page 20). |
| **[Driving Position]**<br>[Right] [Left] | Setting the driving position.<br>• Apple CarPlay (page 34)<br>• Android Auto™ (page 35) |
| **[Android Auto Auto-launch]**<br>[On] [Off] | Select [On] to automatically launch Android Auto when an Android device is connected to the unit. |

### [Input/Output Settings]

| Menu Item | Description |
|---|---|
| **[AppRadio Mode Sound]** | Set where the sound for AppRadio Mode + is output when it is used with a smartphone. |
| [AVH] | The sound is output from the speakers of this unit. |
| [Smartphone] | The sound is output from the speakers of the smartphone.<br>**NOTE**<br>With an iPhone, the sound is always output from the speakers of this unit. |
| **[AV Input]**<br>[Source] [Camera] [Off] | Select AV input source (page 44). |
| **[AUX Input]**<br>[On] [Off] | Set to [On] for AUX source (page 43). |

### [Camera settings]

A separately sold rear view camera (e.g. ND-BC8) is required for utilizing the rear view camera function. (For details, consult your dealer.)

#### ▸Rear view camera

This product features a function that automatically switches to the full-screen image of the rear view camera installed on your vehicle when the shift lever is in the REVERSE (R) position.
Camera View mode also allows you to check what is behind you while driving.

#### ▸Camera for Camera View mode

Camera View can be displayed at all times. Note that with this setting, the camera image is not resized to fit, and that a portion of what is seen by the camera is not viewable.
To display the camera image, touch [Camera View] on the AV source selection screen (page 19).

**NOTES**

- To set the rear view camera as the camera for Camera View mode, set [Back Camera Input] to [On] (page 50).
- When using the 2nd camera, set [AV Input] to [Camera] (page 44).

- When the camera view of both the rear view camera and 2nd camera are available, the key to switch the display appears. Touch this key to switch the display between the rear view image and 2nd camera image.

### ⚠ CAUTION

Pioneer recommends the use of a camera which outputs mirror reversed images, otherwise the screen image may appear reversed.

- Immediately verify whether the display changes to the rear view camera image when the shift lever is moved to REVERSE (R) from another position.
- When the screen changes to full-screen rear view camera image during normal driving, switch to the opposite setting in [Reverse Gear Setting].
- If you touch [⟲] while the camera image is displayed, the displayed image turns off temporarily.
- When the camera view of both the rear view camera and 2nd camera are available, the key to switch the display appears. Touch this key to switch the display between the rear view image and 2nd camera image.

| Menu Item | Description |
|---|---|
| **[Camera View]**<br>[On] [Off] | Set to [On] to display camera view at all times. (The same mode is turned on when [⟲] is touched on the camera view screen. The setting value is synchronized.)<br>**NOTES**<br>• To set the rear view camera as the camera for Camera View mode, set [Back Camera Input] to [On] (page 50).<br>• When using the second camera, set [AV Input] to [Camera] or [2nd Camera Input] to [On] (both settings are synchronized) (page 50).<br>**TIP**<br>You can also turn this function on by touching [Camera View] on the AV source selection screen or in the source list. |
| **[Back Camera Input]**<br>[Off] [On] | Setting the second camera activation (front camera, etc.). Setting rear view camera activation. |
| **[2nd Camera Input]**<br>[Off] [On] | Setting the second camera activation (front camera, etc.). This function is synchronized with [AV Input] setting. |
| **[Reverse Gear Setting]** | Setting the polarity of the rear view camera. |
| [Battery] | The polarity of the connected lead is positive. |
| [Ground] | The polarity of the connected lead is negative.<br>**NOTE**<br>If the camera polarity setting is wrong, or wrong camera setting is made, press RESET button to release the rear view camera screen and then change the camera polarity setting to [Battery]. |

| Menu Item | Description |
|---|---|
| **[Back Camera: Reverse Video]***<br>[Off] [On] | Set whether to reverse the rear view camera images to be displayed on the front screen.<br>**NOTE**<br>This function is available when [Back Camera Input] is set to [On] (Page XX). |
| **[2nd Camera: Reverse video]***<br>[Off] [On] | Setting the reversed image.<br>**NOTE**<br>This function is available when [AV Input] is set to [Camera] or [2nd Camera Input] is set to [On] (page 50). |

* This setting is available only when you stop your vehicle in a safe place and apply the parking brake.

## [Wi-Fi Settings]

| Menu Item | Description |
|---|---|
| **[Wi-Fi Settings]** | (page 18) |

## [Demo Mode]

| Menu Item | Description |
|---|---|
| **[Demo Mode]**<br>[On] [Off] | Setting the demo mode. |

## [System Language]

| Menu Item | Description |
|---|---|
| **[System Language]** | Select the system language.<br>**NOTES**<br>• If the embedded language and the selected language setting are not the same, the text information may not display properly.<br>• Some characters may not be displayed properly. |

## [Restore Settings]

Touch [Restore] to restore the settings to the default settings.

### ⚠ CAUTION

Do not turn off the engine while restoring the settings.

**NOTE**

This setting is available only when you stop your vehicle in a safe place and apply the parking brake.

| Menu Item | Description |
|---|---|
| **[All Settings]** | Almost all settings or recorded content returns to the default. |
| **[Audio Settings]** | Restore to default Audio settings.<br>**NOTE**<br>This setting is available when the source is turned off. |
| **[Theme Settings]** | Restore to default Theme settings. |
| **[Bluetooth Settings]** | Restore to default Bluetooth settings. |

## [Keyboard]

| Menu Item | Description |
|---|---|
| **[Keyboard]** | You can use the keyboard in AppRadio Mode + by setting the language of the keyboard for iPhone.<br>**NOTES**<br>• Set the same system language setting as the iPhone to operate this function properly.<br>• This function is only available in AppRadio Mode + on the iPhone. |

## [Beep Tone]

| Menu Item | Description |
|---|---|
| **[Beep Tone]**<br>[On] [Off] | Select [Off] to disable the beep sound when the button is pressed or the screen is touched. |

## [Touch Panel Calibration]

If you feel that the touch panel keys on the screen deviate from the actual positions that respond to your touch, adjust the response positions of the touch panel screen.

**NOTES**

- Do not use sharp pointed tools such as ballpoint or mechanical pens. They may damage the screen.
- Do not turn off the engine while saving the adjusted position data.
- This setting is available only when you stop your vehicle in a safe place and apply the parking brake.

| Menu Item | Description |
|---|---|
| **[Touch Panel Calibration]** | **1 Touch two corners of the screen along the arrows then touch the centers of the two [+] marks at the same time twice.**<br>**2 Press [■].**<br>The adjustment results are saved.<br>**3 Press [■] once again.**<br>Proceed to 16-point adjustment.<br>**4 Gently touch the center of the [+] mark displayed on the screen.**<br>The target indicates the order.<br>• When you press [■], the previous adjustment position returns.<br>• When you press and hold [■], the adjustment is canceled.<br>**5 Press and hold [■].**<br>The adjustment results are saved. |

## [Dimmer Settings]

**NOTE**

This setting is available only when you stop your vehicle in a safe place and apply the parking brake.

| Menu Item | Description |
|---|---|
| **[Dimmer Trigger]** | Setting the dimmer brightness. |
| [Auto] | Switches the dimmer to on or off automatically according to your vehicle's headlight turning on or off. |
| [Manual] | Switches the dimmer to on or off manually. |
| [Time] | Switches the dimmer to on or off at the time you adjusted. |
| **[Day/Night]** | Setting the dimmer duration by day or night.<br>You can use this function when [Dimmer Trigger] is set to [Manual]. |
| [Day] | Turns the dimmer function to off. |
| [Night] | Turns the dimmer function to on. |

| Menu Item | Description |
|---|---|
| **[Dimmer Duration]** | Adjust the time that the dimmer is turned on or off by dragging the cursors or touching ◀ or ▶.<br>You can use this function when [Dimmer Trigger] is set to [Time].<br>**TIPS**<br>• Each touch of ◀ or ▶ moves the cursor backward or forward in the 15 minute width.<br>• When the cursors are placed on the same point, the dimmer available time is 0 hours.<br>• When the cursor for off time setting is placed on the left end and the cursor for on time setting is placed on the right end, the dimmer available time is 0 hours.<br>• When the cursor for on time setting is placed on the left end and the cursor for off time setting is placed on the right end, the dimmer available time is 24 hours.<br>**NOTE**<br>The time display of the dimmer duration adjusting bar depends on the clock display setting (page 60). |

## [Picture Adjustment]

You can adjust the picture for each source and rear view camera.

**⚠ CAUTION**

For safety reasons, you cannot use some of these functions while your vehicle is in motion. To enable these functions, you must stop in a safe place and apply the parking brake.

To adjust following menu, touch ◀, ▶, ▲, ▼ to adjust.

| Menu Item | Description |
|---|---|
| **[Brightness]**<br>[-24] to [+24] | Adjust the black intensity. |
| **[Contrast]**<br>[-24] to [+24] | Adjust the contrast. |
| **[Color]***<br>[-24] to [+24] | Adjust the color saturation. |
| **[Hue]***<br>[-24] to [+24] | Adjust the tone of color (which color is emphasized, red, or green). |
| **[Dimmer Level]**<br>[+1] to [+48] | Adjust the brightness of the display. |
| **[Temperature]**<br>[-3] to [+3] | Adjust the color temperature, resulting in a better white balance. |

* With some pictures, you cannot adjust [Hue] and [Color].

**NOTES**

- The adjustments of [Brightness], [Contrast], and [Dimmer Level] are stored separately when your vehicle's headlights are off (daytime) and on (nighttime).
- [Brightness] and [Contrast] are switched automatically depending on the setting of [Dimmer Settings].
- [Dimmer Level] can be changed the setting or the time to switch it to on or off (page 51).
- The picture adjustment may not be available with some rear view cameras.
- The setting contents can be memorized separately.

## [System Information]

| Menu Item | Description |
|---|---|
| **[Firmware Information]** | Displays the firmware version.<br>**TIP**<br>You can also check the open source license of the functions that this product is equipped with by touching [License] in this menu. |
| **[Firmware Update]** | **⚠ CAUTION**<br>• The external storage device for updating must contain only the correct update file.<br>• Never turn this product off, eject the SD memory card or disconnect the USB storage device while the firmware is being updated.<br>• You can only update the firmware when the vehicle is stopped and the parking brake is engaged.<br>• You cannot update the old firmware version once the latest firmware is updated.<br>**1 Download the firmware update files into your computer.**<br>**2 Connect a blank (formatted) storage device to your computer then locate the correct update file and copy it onto the USB storage device.**<br>**3 Set the external storage device to this product (page 26).**<br>**4 Turn the source off (page 26).**<br>**5 Display the [System] setting screen (page 49).**<br>**6 Touch [System Information].**<br>**7 Touch [Firmware Update].**<br>**8 Touch [Continue].**<br>Follow the on-screen instructions to finish updating the firmware.<br>**NOTE**<br>If an error message appears on the screen, touch the display and perform the above steps again. |

| Menu Item | Description |
|---|---|
| **[3D Calibration Status]** | Check the sensor learning status, such as the degree of learning. You can also check the current sensor values and the total number of speed pulses.<br>To delete the learned results stored in the sensor, follow the below instructions.<br>**1 Touch [Distance] or [Speed Pulse], and then touch [Yes].**<br>**2 Touch [Learning] and then touch [Reset All].**<br>**TIP**<br>Touch [Reset All] to reset the sensor after changing the installation position or angle.<br>**NOTE**<br>If you touch [Reset Distance], all learned results stored in [Distance] are cleared. |
| **[Connection Status]** | Check that the leads are properly connected between this product and vehicle. |
| [GPS Antenna] | Displays the connection status of the GPS antenna ([OK] or [NOK]) and the reception sensitivity.<br>**NOTE**<br>If reception is poor, change the installation position of the GPS antenna. |
| [Positioning Status] | Displays the positioning status (3D positioning, 2D positioning, or no positioning), the number of satellites used for positioning (orange), and the number of satellites that have received signals (yellow). If signals from more than three satellites are received, the current location can be measured. |
| [Installation] | Indicates whether the installation position of this product is correct or not. If installed correctly, [OK] appears. When this product is installed at an extreme angle exceeding the limitation of the installing angle, [NOK(Inst. Angle)] is displayed. If the installation of this product is continually changed and it is not firmly fixed into place, [NOK(Vibration)] is displayed. |
| [Speed Pulse] | The speed pulse value detected by this product is shown. |
| [Illumination] | Displays the status of headlights or small lamps of the vehicle. |
| [Back Signal] | When the shift lever is shifted to "R" (reverse position), the signal switches to [High] or [Low]. The signal displayed varies depending on the vehicle. |

| Menu Item | Description |
|---|---|
| [iDataLink] | Displays the status of the optional iDatalink adapter. |

### [OEM Settings]

| Menu Item | Description |
|---|---|
| **[OEM Settings]** | (page 48). |

### [OEM Volume Settings]

| Menu Item | Description |
|---|---|
| **[OEM Volume Settings]** | (page 48). |

## Theme settings

**CAUTION**

Do not turn off the engine while importing an image from the external storage device.

The menu items vary according to the source.

| Menu Item | Description |
|---|---|
| **[Background]**<br>[Home] [AV] | Select the wall paper from the preset items in this product or original pictures via the external device such as USB storage device and SD memory card.<br>**TIP**<br>The wall paper can be set from selections for the top menu screen and AV operation screen. |
| Preset Display | Selects the desired preset background display. |
| (custom)* | Displays the background display image imported from the external storage device.<br>To set the image from an external device, touch then select the desired image by touching the desired external storage device after connecting the device.<br>**NOTE**<br>Background display image must be used within the following formats.<br>• JPEG image files (.jpg or .jpeg)<br>• Allowable data size is 10 MB or smaller<br>• Allowable image size is 4 000 pixels × 4 000 pixels or smaller |
| OFF (off) | Hides the background display. |

| Menu Item | Description |
|---|---|
| **[Illumination]** | Select an illumination color from the color list or create a defined color. |
| Colored Keys | Select the desired preset color. |
| (custom) | Displays the screen to customize the illumination color.<br>To customize the defined color, touch then touch or to adjust the brightness and the level of red, green and blue to create favorite color.<br>To store the customized color in the memory, touch and hold [Memo], and the customized color will be available at the next illumination setting by touching .<br>**TIP**<br>You can also adjust the color tone by dragging the color bar. |
| (rainbow) | Shifts gradually between the preset colors in sequence. |
| **[Theme]** | Select the theme color.<br>**TIP**<br>You can preview the top menu screen or the AV operation screen by touching [Home] or [AV] respectively. |
| **[Clock]** | Select the style of the clock from the preset image. |
| Preset Images | Select the desired preset style for the clock. |
| OFF (off) | Hides the clock display. |
| **[Splash Screen]** | Select the splash screen from the preinstalled image in this product or external devices such as USB storage devices and SD memory cards. |
| Preset Images | Selects the desired preset splash screen image. |
| (custom)* | Displays the splash screen image imported from the external storage device.<br>To set the image from an external device, touch then select the desired image by touching the desired external storage device after connecting the device. |

* The external storage device is inserted or plugged in in advance to customize the image (page 26).

## Replicating the settings

You can export settings you have made on the [Theme] screen to an external storage device. Also, you can import them from an external storage device.

**CAUTION**

Do not turn off the engine while exporting or importing the settings.

**NOTES**

- If multiple external storage devices that include available data are connected to this product, the order of priority for the targets that the Theme settings are exported to or imported from is as follows:
  ①SD memory card
  ②USB storage device (USB port 1)
  ③USB storage device (USB port 2)
- This setting is available only when you stop your vehicle in a safe place and apply the parking brake.

### ▸Exporting Theme settings

1 **Set the external storage device (page 26).**

2 **Press .**

3 **Touch then .**

4 **Touch [Export].**

5 **Touch the item you want export.**
**[Illumination]**
**[Theme]**
**[Splash Screen]**
**[Select All]**

6 **Touch [Export].**

### ▸Importing Theme settings

1 **Set the external storage device (page 26).**
A message confirming whether to import the stored setting data appears.

2 **Touch [Import].**

# Audio settings

The menu items vary according to the source. Some of the menu items become unavailable when the volume is set to mute or the source is off.

| Menu Item | Description |
|---|---|
| **[Graphic EQ]**<br>[Super Bass] [Powerful] [Natural] [Vocal] [Flat] [Custom1] [Custom2] | Select or customize the equalizer curve.<br>Select a curve that you want to use as the basis of customizing then touch the frequency that you want to adjust.<br>**TIPS**<br>• If you touch [Custom1] or [Custom2], the equalizer curve currently stored in [Custom1] or [Custom2] is recalled.<br>• If the equalizer curve stored in [Custom1] or [Custom2] is modified, each stored curve will be overwritten.<br>• If you trail your finger across the bars of multiple equalizer bands, the equalizer curve settings will be set to the value of the touched point on each bar.<br>• If the preset equalizer curve other than [Custom1] or [Custom2] is modified, the curve setting will be overwritten in [Custom1]. |
| **[Fader/Balance]** | Touch ▲ or ▼ to adjust the front/rear speaker balance.<br>Set [Front] and [Rear] to [0] when using a dual speaker system.<br>Touch ◀ or ▶ to adjust the left/right speaker balance.<br>**TIP**<br>You can also set the value by dragging the point on the displayed table.<br>**NOTE**<br>Only the balance can be adjusted when [Network Mode] is selected as the speaker mode. |
| **[Mute Level]** | Select mute or attenuate the AV source volume and iPhone or smartphone application volume when the navigation outputs the guidance voice. |
| [ATT] | The volume becomes 20 dB lower than the current volume. |
| [Mute] | The volume becomes 0. |
| [Off] | The volume does not change. |

| Menu Item | Description |
|---|---|
| **[Source Level Adjuster]**<br>[-4] to [+4] | Adjust the volume level of each source to prevent radical changes in volume when switching between sources other than FM.<br>Touch ▲ or ▼ to adjust the source volume after comparing the FM tuner volume level with the level of the source.<br>**TIP**<br>If you directly touch the area where the cursor can be moved, the SLA (source level adjustment) setting will be changed to the value of the touched point.<br>**NOTES**<br>• Settings are based on the FM tuner volume level, which remains unchanged.<br>• This function is not available when the FM tuner is selected as the AV source. |
| **[Subwoofer]**<br>[On] [Off] | Select enable or disable rear subwoofer output from this product.<br>**NOTE**<br>If [Off] is selected, the subwoofer adjustment is not available in [Speaker Level], [Time Alignment] and [Crossover]. |
| **[Speaker Level]**<br>**Listening position*1*2**<br>[Off] [Front Left] [Front Right] [Front] [All]<br><br>**Standard Mode*3**<br>[Front Left] [Front Right] [Rear Left] [Rear Right] [Subwoofer]<br>**Network Mode*3**<br>[High Left] [High Right] [Mid Left] [Mid Right] [Subwoofer]<br>**Speaker output level**<br>[-24] to [10] | Adjust the speaker output level of the listening position.<br>**1 Touch ◀ or ▶ to select the listening position then select the output speaker.**<br>**2 Touch ◀ or ▶ to adjust the selected speaker output level.** |
| **[Crossover]** | Select a speaker unit (filter) to adjust the HPF or LPF cutoff frequency and the slope for each speaker unit (page 58). |
| **[Subwoofer Settings]** | Select the subwoofer phase (page 58). |
| **[Listening Position]*1**<br>[Off] [Front Left] [Front Right] [Front] [All] | Select a listening position that you want to make as the center of sound effects. |

| Menu Item | Description |
|---|---|
| **[Time Alignment]**<br>[On] [Off]<br>**Listening position*1*2**<br>[Off] [Front Left] [Front Right] [Front] [All]<br>**Standard Mode*3*4**<br>[Front Left] [Front Right] [Rear Left] [Rear Right] [Subwoofer]<br>**Network Mode*3*4**<br>[High Left] [High Right] [Mid Left] [Mid Right] [Subwoofer]<br>**Distance**<br>[0] to [140] | Select or customize the time alignment settings to reflect the distance between the listener's position and each speaker. You need to measure the distance between the head of the listener and each speaker unit.<br>**1 Touch ◀ or ▶ to select the listening position then select the alignment speaker.**<br>**2 Touch ◀ or ▶ to input the distance between the selected speaker and listening position.**<br>**TIP**<br>If you touch [TA On], the time alignment is turned off mandatorily.<br>**NOTE**<br>This function is available only when the listening position setting is set to [Front Left] or [Front Right]. |
| **[Auto EQ]**<br>[On] [Off] | Set the auto-adjusted equalizer to suit the vehicle's acoustics. To use this function, the Auto EQ measurement must be done in advance (page 57). |
| **[A-EQ&TA Measurement]** | Measures and adjusts the vehicles acoustics, equalizer, and time alignment automatically to suit the vehicle interior (page 57). |
| **[Save Settings]** | Save to recall the following current sound settings by touching [OK]: bass boost, slope, subwoofer phase, speaker level, Graphic EQ, HPF/LPF, listening position, crossover, time alignment.<br>**TIP**<br>When you touch [Cancel], return to the [Audio] setting screen. |
| **[Load Settings]** | Load the sound settings.<br>**NOTES**<br>• [Sound Setting] is available only when you have already saved the sound settings (page 56).<br>• [Auto EQ&TA Setting] is available only when you have already performed Auto EQ measurement (page 56). |
| **[ASL]** | Set to one of five levels to increase the volume level of the audio depending on the driving speed and road conditions. |
| **[BASS Boost]**<br>[0] to [6] | Adjust the bass boost level. |

| Menu Item | Description |
|---|---|
| **[Rear Speaker Output]**<br>[Rear] [Subwoofer] | Select the rear speaker output.<br>**NOTES**<br>• This function is available when [Standard Mode] is selected as the speaker mode.<br>• If [Subwoofer] is selected, the rear speaker adjustment is not available in [Speaker Level], [Time Alignment] and [Crossover]. |
| **[Loudness]**<br>[Off] [Low] [Mid] [High] | Compensates for deficiencies in the low-frequency and high-frequency ranges at low volume. |
| **[Automatic Level Control]** | Corrects automatically the audio level difference between the music files or the sources. |
| [Off] | Turns the auto level control setting off. |
| [Mode1] | Corrects a little the audio level difference between the music files or the sources (for the narrow dynamic range audio signal). |
| [Mode2] | Corrects widely the audio level difference between the music files or the sources (for the wide dynamic range audio signal). |
| **[Sound Retriever]**<br>[Off] [Mode1] [Mode2] | Enhances compressed audio and restores rich sound automatically.<br>**TIP**<br>[Mode2] has a stronger effect than [Mode1]. |

*1 [All] is not available when [Network Mode] is selected as the speaker mode.
*2 If you change the listening position setting, the output levels of all the speakers will change in conjunction with the setting.
*3 To use this function, the vehicle's acoustics must be measured in advance.
*4 This function is available only when the [Listening Position] setting is set to [Front Left] or [Front Right].

## Adjusting the equalizer curve automatically (Auto EQ)

By measuring the vehicle's acoustics, the equalizer curve can be adjusted automatically to suit the vehicle interior.

### ⚠ WARNING

A loud tone (noise) may be emitted from the speakers when measuring the vehicle's acoustics. Never perform Auto EQ measurement while driving.

### ⚠ CAUTION

• Thoroughly check the conditions before performing Auto EQ as the speakers may be damaged if this is performed under the following conditions:

– When the speakers are incorrectly connected. (For example, when a rear speaker is connected as a subwoofer output.)
– When a speaker is connected to a power amp delivering output higher than the speaker's maximum input power capability.

- If a microphone for acoustical measurement (sold separately) is not placed in the appropriate location, the measurement tone may become loud and measurement may take a long time, resulting in battery drainage. Be sure to place the microphone in the specified location.

### ▸Before operating the Auto EQ function

- Perform Auto EQ in a quiet place with the vehicle engine and air conditioning switched off. Also, cut the power of car phones or cellular phones in the vehicle, or remove them in advance. Surrounding sounds may prevent correct measurement of the vehicle's acoustics.
- Be sure to use the microphone for acoustical measurement (sold separately). Using other microphones may prevent measurement, or result in incorrect measurement of the vehicle's acoustics.
- To perform Auto EQ, the front speakers must be connected.
- When this product is connected to a power amp with input level control, Auto EQ may be impossible if the power amp's input level is set below the standard level.
- When this product is connected to a power amp with an LPF (low pass filter), turn the LPF off before performing Auto EQ. Also, set the cutoff frequency for the built-in LPF of an active subwoofer to the highest frequency.
- The distance has been calculated by a computer to provide optimum delay to ensure accurate results. Do not change this value.
  – The reflected sound within the vehicle is strong and delay occurs.
  – The LPF on active subwoofers or external amps delay the lower sounds.
- If an error occurs during measurement, check the following before measuring the vehicle's acoustics.
  – Front speakers (left/right)
  – Rear speakers (left/right)
  – Noise
  – Microphone for acoustical measurement (sold separately)
  – Low battery

### ▸Performing Auto EQ

**⚠ CAUTION**

Do not turn off the engine while the measurement is in progress.

**NOTES**

- Auto EQ changes the audio settings as follows:
  – The fader/balance settings return to the center position (page 55).
- Previous settings for Auto EQ will be overwritten.

1 **Stop the vehicle in a quiet place, close all doors, windows, and sun roof, and then turn the engine off.**
If the engine is left running, engine noise may prevent correct Auto EQ.

**NOTE**

If driving restrictions are detected during measurement, the measurement is canceled.

2 **Fix the microphone for acoustical measurement (sold separately) in the center of the headrest of the driver's seat, facing forward.**
The Auto EQ may differ depending on where you place the microphone. If desired, place the microphone on the front passenger seat and perform Auto EQ.

3 **Disconnect the iPhone or smartphone device.**

4 **Turn on the ignition switch (ACC ON).**
If the vehicle's air conditioner or heater is turned on, turn it off.

5 **Switch the AV source to [Source OFF] (page 19).**

6 **Press [⊞].**

7 **Touch [⚙] then [🔊].**

8 **Touch [A-EQ&TA Measurement].**

9 **Connect the microphone for acoustical measurement (sold separately) with this product.**
Plug the microphone into the Auto EQ microphone input jack on this product (page 7).

**NOTE**

Use an extension cable (sold separately) if the cord of the microphone (sold separately) is not long enough.

10 **Touch [Front Left] or [Front Right] to select the current listening position.**

11 **Touch [Start].**
A 10-second countdown starts.

**NOTE**

The Bluetooth connection is disconnected before the process starts.

12 **Exit the vehicle and keep the doors closed until the countdown finishes.**
When the countdown finishes, a measurement tone (noise) is emitted from the speakers and Auto EQ measurement begins.

13 **Wait until the measurement is completed.**
When Auto EQ is completed, a message is displayed.

**NOTE**

The measurement time varies depending on the type of vehicle.

**TIP**

To stop the measurement, touch [Stop].

14 **Store the microphone carefully in the glove compartment or another safe place.**

If the microphone is subjected to direct sunlight for an extended period, high temperatures may cause distortion, color change, or malfunction.

## Adjusting the cutoff frequency value

You can adjust the cutoff frequency value of each speaker.
The following speakers can be adjusted:
[**Standard Mode**]: Front, Rear, Subwoofer.
[**Network Mode**]: High, Mid, Subwoofer.

**NOTES**

- Subwoofer settings are available only when [Subwoofer] is [On].
- Rear speaker settings are available only when [Rear Speaker Output] is [Rear].

1 **Press [⊞].**

2 **Touch [⚙] then [🔊].**

3 **Touch [Crossover] or [Subwoofer Settings].**

4 **Touch [◀] or [▶] to switch the speaker.**

5 **Drag the graph line to set the cutoff position.**

6 **Drag the lowest point of the graph to set the cutoff slope.**
The following items can also be set.

| | |
|---|---|
| [Phase] | Switches the subwoofer phase between normal and reverse position. |
| **LPF/HPF** | Switches the LPF/HPF setting to [On] or [Off]. When it is turned off, the high-pass filter or low-pass filter of each speaker can also be turned on by touching the graph lines. |

# Video settings

The menu items vary according to the source.

## [DVD/DivX Setup]

This setting is available only when [Disc] is selected as the source.

| Menu Item | Description |
|---|---|
| **[Subtitle Language]*1*2** | Set a subtitle language preference. When you select [Others], a language code input screen is shown. Input the four-digit code of the desired language then touch [↵]. |
| **[Audio Language]*1*2** | Set an audio language preference. When you select [Others], a language code input screen is shown. Input the four-digit code of the desired language then touch [↵]. |
| **[Menu Language]*1*2** | Set a menu language preference. When you select [Others], a language code input screen is shown. Input the four-digit code of the desired language then touch [↵]. |
| **[Multi Angle]**<br>[On] [Off] | Set to display the angle icon on the screen. |
| **[TV Aspect]** | Set the aspect ratio suitable for your rear display 16:9 (wide screen display) or 4:3 (regular display). (We recommend use of this function only when you want to fit the aspect ratio to the rear display.)<br>**NOTES**<br>• When playing discs that do not have a panscan system, the disc is played back with [Letter Box] even if you select the [Pan Scan] setting. Confirm whether the disc package bears the [16:9 LB] mark.<br>• The TV aspect ratio cannot be changed for some discs. For details, refer to the disc's instructions. |
| [16:9] | Displays the wide screen image (16:9) as it is (initial setting). |
| [Letter Box] | Makes the image in the shape of a letterbox with black bands on the top and bottom of the screen. |
| [Pan Scan] | Cuts the image short on the right and left sides of the screen. |

| Menu Item | Description |
|---|---|
| **[Parental]** | Set restrictions so that children cannot watch violent or adult-oriented scenes. You can set the parental lock level in steps as desired.<br>**1 Touch [0] to [9] to input a four-digit code number.**<br>**2 Touch ↵.**<br>Registers the code number, and you can now set the level.<br>**3 Touch any number between [1] to [8] to select the desired level.**<br>The lower the level is set, the tighter the restriction is applied.<br>**4 Touch ↵.**<br>Sets the parental lock level.<br>**NOTES**<br>• We recommend keeping a record of your code number in case you forget it.<br>• The parental lock level is recorded on the disc. You can confirm it by looking at the disc package, the included booklet, or the disc itself. You cannot use parental lock with discs that do not feature a recorded parental lock level.<br>• With some discs, parental lock operates to skip certain scenes only, after which normal playback resumes. For details, refer to the disc's instructions.<br>• When you set a parental lock level and then play a disc featuring parental lock, code number input indications may be displayed. In this case, playback will begin when the correct code number is input. |
| **[DivX® VOD]** | Displays this product's registration and deregistration code to register this product with your DivX VOD content provider to play DivX® VOD (video on demand) content on this product.<br>**TIP**<br>You can do this by generating a DivX VOD registration code, which you submit to your provider.<br>[Registration Code] is 10-digit.<br>[Deregistration Code] is 8-digit.<br>**NOTE**<br>Make a note of the code as you will need it when you register or deregister from a DivX VOD provider. |

| Menu Item | Description |
|---|---|
| **[DVD Auto Play]**<br>[On] [Off] | Set to display the DVD menu automatically and start playback from the first chapter of the first title when a DVD disc with a DVD menu is inserted.<br>**NOTE**<br>Some DVDs may not operate properly. If this function is not fully operable, turn this function off and start playback. |

*1 You can switch the language by touching the switch languages key during playback.
*2 The setting made here will not be affected even if the language is switched during playback using the appropriate key.

## [Time Per Photo Slide]

| Menu Item | Description |
|---|---|
| **[Time Per Photo Slide]**<br>[5sec] [10sec] [15sec] [Manual] | Select the interval of image file slideshows on this product. |

## [Video Signal Setting]

| Menu Item | Description |
|---|---|
| **[AV]**<br>[Auto] [PAL] [NTSC] [PAL-M] [PAL-N] [SECAM] | Select the suitable video signal setting when you connect this product to an AV equipment. |
| **[AUX]**<br>[Auto] [PAL] [NTSC] [PAL-M] [PAL-N] [SECAM] | Select the suitable video signal setting when you connect this product to an AUX equipment. |
| **[Camera]**<br>[Auto] [PAL] [NTSC] [PAL-M] [PAL-N] [SECAM] | Select the suitable video signal setting when you connect this product to a rear view camera. |

# Favorite menu

Registering your favorite menu items in shortcuts allows you to quickly jump to the registered menu screen by a simple touch on the [Favorites] screen.

**NOTE**

Up to 12 menu items can be registered in the favorite menu.

## Creating a shortcut

**1** **Press [⊞] then touch [⚙].**

**2** **Touch the star icon of the menu item.**

The star icon for the selected menu is filled in.

**TIP**

To cancel the registration, touch the star icon in the menu column again.

## Selecting a shortcut

**1** **Press [⊞] then touch [⚙].**

**2** **Touch [★].**

**3** **Touch the menu item.**

## Removing a shortcut

**1** **Press [⊞] then touch [⚙].**

**2** **Touch [★].**

**3** **Touch and hold the favorite menu column.**

The selected menu item is removed from the [Favorites] screen.

**TIP**

You can also remove a shortcut by touching and holding the registered menu column.

# Other functions

## Setting the time and date

**1** **Touch the current time on the screen.**

**2** **Touch [▲] or [▼] to set the correct time and date.**

You can operate the following items: Year, month, date, hour, minute.

**TIPS**

- You can change the time display format to [12hour] or [24hour].
- You can change the order of date display format: Day-month, Month-day.

## Changing the wide screen mode

You can set the screen mode for AV screen and image files.

**1** **Touch the screen display mode key.**

| | |
|---|---|
| ① | **Screen display mode key** |

**2** **Touch the desired mode.**

| | |
|---|---|
| [Full] | A 4:3 picture is enlarged in the horizontal direction only, enabling you to enjoy an image without any omissions. |
| [Zoom] | A 4:3 picture is enlarged in the same proportion both vertically and horizontally. |
| [Normal] | A 4:3 picture is displayed normally, without changing its proportion. |

| | |
|---|---|
| [Trimming] | An image is displayed across the entire screen with the horizontal-to-vertical ratio left as is. If the screen ratio differs from the image, the image may be displayed partly cut off either at the top/bottom or sides.<br>**NOTE**<br>[Trimming] is for image files only. |

**TIPS**

- Different settings can be stored for each video source.
- When a video is viewed in wide screen mode that does not match its original aspect ratio, it may appear different.
- The video image will appear coarser when viewed in [Zoom] mode.

**NOTES**

- Image files can be set to either [Normal] or [Trimming] in wide screen mode.
- This setting is available only when you stop your vehicle in a safe place and apply the parking brake.

## Selecting the video for the rear display

You can choose either to show the same image as the front screen or to show the selected source on the rear display.

**NOTES**

- Video files on the external storage device are not available as a source for the rear display when [Apple CarPlay] is activated.
- Video files on the external storage device are not available as a source for the rear display when [Android Auto] is activated in [Smartphone Setup].

**1** Press [⊞] then touch [AV].

**2** Touch [Rear].

**3** Touch the source you want to show on the rear display.

| | |
|---|---|
| [Mirror] | The video on the front screen of this product is output to the rear display.<br>**NOTE**<br>Not all videos or sounds can be output to the rear display. |
| [DVD/CD] | The video and sound of a disc are output to the rear display.<br>**NOTE**<br>Compatible video types are DVD-V, Video-CD, DivX, MPEG-1, MPEG-2, and MPEG-4 only. |
| [USB1] | The video and sound of the USB storage device is output to the rear display.<br>**NOTES**<br>• The port that supports the rear display will only be USB port 1.<br>• Compatible file types are MPEG-4, H.264, WMV, MKV, and FLV only. |
| [SD] | The video and sound of the SD memory cards are output to the rear display.<br>**NOTE**<br>Compatible file types are MPEG-4, H.264, WMV, MKV, and FLV only. |
| [AV] | The video and/or sound of the AV input source are output to the rear display.<br>**NOTE**<br>The video image and sound are output only when [AV Input] is set to [Source] (page 44). |
| [Source OFF] | Nothing is output to the rear display. |

## Setting the anti-theft function

You can set a password for this product. If the back-up lead is cut after the password is set, this product prompts for the password at the time of next boot up.

**Important**

If you forgot your password, contact the nearest authorized Pioneer Service Station.

### Setting the password

**1** Press [⊞].

**2** Touch [⚙] then [🔧].

**3** Touch 1, followed by 2, and then touch 3.

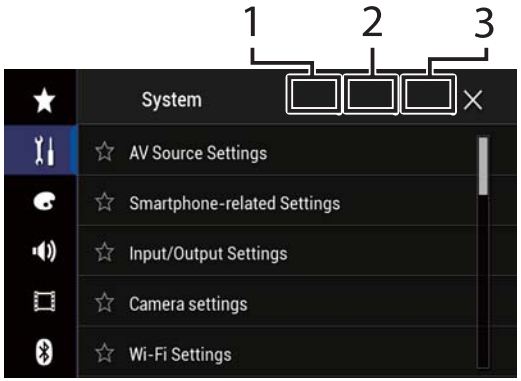


**4** Touch [Set Password].

**5** Enter the password.

5 to 16 characters can be entered for a password.

**6** Touch [Go].

**7** Enter a password hint.

Up to 40 characters can be entered for a hint.

8 **Touch [Go].**
If you want to change the password currently set, enter the current password and then enter the new one.

9 **Check the password, and then touch [OK].**

### Deleting the password

The current password and password hint can be deleted.

1 **Press [ ].**

2 **Touch [ ] then [ ].**

3 **Touch 1, followed by 2, and then touch 3 (page 61).**

4 **Touch [Clear Password].**

5 **Touch [Yes].**

6 **Touch [OK].**

7 **Enter the current password.**

8 **Touch [Go].**
A message indicating that the security setting is canceled appears.

## Restoring this product to the default settings

You can restore settings or recorded content to the default settings from [Restore Settings] in the [System] menu (page 50).

# Appendix

## Troubleshooting

If you have problems operating this product, refer to this section. The most common problems are listed below, along with likely causes and solutions. If a solution to your problem cannot be found here, contact your dealer or the nearest authorized Pioneer service facility.

### Common problems

**A black screen is displayed, and operation is not possible using the touch panel keys.**
→ [Power OFF] mode is on.
– Press any button on this product to release the mode.
– Press and hold the RESET button to release the rear view camera screen and then change the camera polarity setting to [Battery].

### Problems with the AV screen

**CD or DVD playback is not possible.**
→ The disc is inserted upside down.
– Insert the disc with the label upward.
→ The disc is dirty.
– Clean the disc.
→ The disc is cracked or otherwise damaged.
– Insert a normal, round disc.
→ The files on the disc are in an irregular file format.
– Check the file format.
→ The disc format cannot be played back.
– Replace the disc.
→ The loaded disc is a type this product cannot play.
– Check what type of disc it is.

**The screen is covered by a caution message and the video cannot be shown.**
→ The parking brake lead is not connected or the parking brake is not applied.
– Connect the parking brake lead correctly, and apply the parking brake.
→ The parking brake interlock is activated.
– Park your vehicle in a safe place and apply the parking brake.

**No video output from the connected equipment.**
→ The [AV Input] or [AUX Input] setting is incorrect.
– Correct the settings.

**The audio or video skips.**
→ This product is not firmly secured.
– Secure this product firmly.

**No sounds are produced. The volume level will not rise.**
→ Cables are not connected correctly.
– Connect the cables correctly.
→ The system is performing still, slow motion, or frame-by-frame playback with DVD-Video.
– There is no sound during still, slow motion, or frame-by-frame playback with DVD-Video.
→ The system is paused or performing fast reverse or forward during the disc playback.
– For the media other than music CD (CD-DA), there is no sound on fast reverse or forward.

**The icon ⃠ is displayed, and operation is impossible.**
→ The operation is not compatible with the video configuration.
– The operation is not possible. (For example, the DVD playing does not feature that angle, audio system, subtitle language, etc.)

**The picture stops (pauses) and this product cannot be operated.**
→ The reading of data is impossible during disc playback.
– Stop playback once, then restart.

**The picture is stretched, with an incorrect aspect ratio.**
→ The aspect setting is incorrect for the display.
– Select the appropriate setting for that image.

**A parental lock message is displayed and DVD playback is not possible.**
→ The parental lock is on.
– Turn the parental lock off or change the level.

**The parental lock for DVD playback cannot be canceled.**
→ The code number is incorrect.
– Input the correct code number.

**The DVD video is not played back with the audio/subtitle language specified in [DVD/DivX Setup].**
→ The DVD does not support the language selected in [DVD/DivX Setup].
– Playback in the selected language is not possible if the language selected in [DVD/DivX Setup] is not recorded on the disc.

**The picture is extremely unclear/ distorted and dark during playback.**
→ The disc features a signal to prohibit copying. (Some discs may have this.)
– Since this product is compatible with the copy guard analog copy protect system, the picture may suffer from horizontal stripes or other imperfections when a disc with that kind of protection signal is viewed on some displays. This is not a malfunction.

**iPod cannot be operated.**
→ The iPod is frozen.
– Reconnect the iPod with the USB interface cable for iPod/iPhone.
– Update the iPod software version.
→ An error has occurred.
– Reconnect the iPod with the USB interface cable for iPod/iPhone.
– Park your vehicle in a safe place, and then turn off the ignition switch (ACC OFF). Subsequently, turn the ignition switch to on (ACC ON) again.
– Update the iPod software version.
→ Cables are not connected correctly.
– Connect the cables correctly.

**Sound from the iPod cannot be heard.**
→ The audio output direction may switch automatically when the Bluetooth and USB connections are used at the same time.
– Use the iPod to change the audio output direction.

## Problems with the phone screen

**Dialing is impossible because the touch panel keys for dialing are inactive.**
→ Your phone is out of range for service.
– Retry after re-entering the range for service.
→ The connection between the cellular phone and this product cannot be established.
– Perform the connection process.

## Problems with Application screen

**A black screen is displayed.**
→ While operating an application, the application was ended on the smartphone side.
– Press ⊞ to display the top menu screen.
→ The smartphone OS may be awaiting screen operation.
– Stop the vehicle in a safe place and check the screen on the smartphone.

**The screen is displayed, but operation does not work at all.**
→ An error has occurred.
– Park your vehicle in a safe place, and then turn off the ignition switch (ACC OFF). Subsequently, turn the ignition switch to on (ACC ON) again.
– When an Android device is connected, disconnect the Bluetooth connection from this product and then reconnect it.

**The smartphone was not charged.**
→ Charging stopped because the temperature of the smartphone rose due to prolonged use of the smartphone during charging.
– Disconnect the smartphone from the cable, and wait until the smartphone cools down.
→ More battery power was consumed than was gained from charging.
– This problem may be resolved by stopping any unnecessary services on the smartphone.

**The status of the vehicle for the forward and backward directions are reversed.**
→ Since part of the vehicle status is sent to the connected device when you use the Android Auto function, this problem occurs when the reverse gear polarity setting of this product is incorrect.
– Check the polarity and re-select the correct setting.

# Error messages

When problems occur with this product, an error message appears on the display. Refer to the table below to identify the problem, then take the suggested corrective action. If the error persists, record the error message and contact your dealer or your nearest Pioneer service center.

## Common

**AMP Error**
→ This product fails to operate or the speaker connection is incorrect; the protective circuit is activated.
– Check the speaker connection. If the message fails to disappear even after the engine is switched off/on, contact your dealer or an authorized Pioneer Service Station for assistance.

**TEMP**
→ The temperature of this product is outside the normal operating range.
– Wait until this product returns to a temperature within the normal operating limits.

**Product overheat. System will be shut down automatically in 1 minute. Restart the product by ACC-Off/On may fix this problem. If this message keeps showing up, it is possible that some problem occured in the product.**
→ The temperature is too high for this product to operate.
– Follow the instructions displayed on the screen. If this does not solve the

problem, contact your dealer or an authorized Pioneer Station for assistance.

## Pandora

**Error-19**
(Communication error occurred.)
→ Communication failed.
– Disconnect the cable from the iPod. Once the iPod's main menu is displayed, reconnect the iPod and reset it.

**Our content licenses limit the number of tracks you may skip.**
→ Skip limit reached.
– Do not exceed the skip limit.
– Pandora limits the total number of skips per hour.

**Please sign in to your Pandora account**
→ You are not logged in to the Pandora application.
– Please log in to the Pandora application.

**Check USB**
→ The USB connector or USB cable has short-circuited.
– Check that the USB connector or USB cable is not caught in something or damaged.
→ The connected USB storage device consumes more than maximum allowable current.
– Disconnect the USB storage device and do not use it. Turn the ignition switch to OFF, then to ACC or ON and then connect a compliant USB storage device.

**Poor network connection. Listening will resume when it's restored.**
→ The Pandora application is accessed/relocated from outside the licensing region.
– Access Pandora from within the licensing region.

**Incompatible USB**
→ The connected USB storage device is not supported by this product.
– Disconnect your device and replace it with a compatible USB storage device.

## SiriusXM® Satellite Radio

**Check Antenna**
→ The antenna connection is incorrect.
– Check the antenna connection. If the message fails to disappear even after the engine is switched off/on, contact your dealer or the nearest authorized Pioneer service center for assistance.

**Check Tuner**
→ The SiriusXM Connect Vehicle Tuner connection is incorrect.
– Check the tuner connection and battery voltage. If the message fails to disappear even after the engine is switched off/on, contact your dealer or the nearest authorized Pioneer service center for assistance.

**No Signal**
→ The SiriusXM Connect Vehicle Tuner is having difficulty receiving the SiriusXM satellite signal.
– Verify that your vehicle is outdoors with a clear view of the southern sky.
– Verify that the SiriusXM magnetic mount antenna is mounted on a metal surface on the outside of the vehicle.
– Move the SiriusXM antenna away from any obstructions.

**No Content**
→ TuneScan™ is not available.
– Perform the operation with another preset channel.

**Channel Not Available**
→ The channel that you have requested is not a valid SiriusXM channel.
– Visit www.siriusxm.com for more information about the SiriusXM channel lineup.

**Subscription Updated Press Enter to Continue**
→ This product has detected a change in your SiriusXM subscription status.
– Touch [Enter] to clear the message. In the U.S.A., visit www.siriusxm.com or call 1-866-635-2349 if you have questions about your subscription. In Canada, visit www.siriusxm.ca or call 1-877-438-9677 if you have questions about your subscription.

**Channel Not Subscribed. Call SiriusXM to Subscribe.**
→ The channel that you have requested is not included in your SiriusXM subscription package.
– Check the content of your SiriusXM subscription package. In the U.S.A., visit www.siriusxm.com or call 1-866-635-2349 if you have questions about your subscription package or would like to subscribe to this channel. In Canada, visit www.siriusxm.ca or call 1-877-438-9677.

**Channel Locked Please Enter the Lock Code**
→ Locked by the radio Parental Control feature.
– Release the channel lock.

**Artist Unavailable**
→ The alert memo function is not available.
– Perform the operation with another channel.

**Song Unavailable**
→ The alert memo function is not available.
– Perform the operation with another channel.

**Team Unavailable**
→ The alert memo function is not available.
– Perform the operation with another channel.

**Alert Memory Full You can manage alert memory in the alert list**
→ The memory is full.
– Clear the alert list.

**Memory Full**
→ The memory has become full while playback was paused.
– Resume playback.

**Memory Nearly Full**
→ The memory has become nearly full while playback was paused.
– Resume playback.

**No qualified TuneMix music channels in this band.**
→ There are no qualified TuneMix channels in this band.
– Requires two or more qualified music channels to be stored as presets in the current band.

## Disc

**Error-02-XX/FF-FF**
→ The disc is dirty.
– Clean the disc.
→ The disc is scratched.
– Replace the disc.
→ The disc is loaded upside down.
– Check that the disc is loaded correctly.
→ There is an electrical or mechanical error.

– Press the RESET button.

**Different Region Disc**
→ The disc does not have the same region number as this product.
– Replace the DVD with one bearing the correct region number.

**Unplayable Disc**
→ This type of disc cannot be played on this product.
– Replace the disc with one that can be played on this product.

**Unplayable File**
→ This type of file cannot be played on this product.
– Select a file that can be played.

**Skipped**
→ The inserted disc contains DRM protected files.
– The protected files are skipped.

**Protect**
→ All the files on the inserted disc are embedded with DRM.
– Replace the disc.

**This DivX rental has expired.**
→ The inserted disc contains expired DivX VOD content.
– Select a file that can be played.

**Video resolution not supported**
→ Files that cannot be played on this product are included in the file.
– Select a file that can be played.

**Unable to write to flash memory.**
→ The playback history for VOD contents cannot be saved for some reason.
– Retry.
– If the message appears frequently, consult your dealer.

**Your device is not authorized to play this DivX protected video.**
→ This product's DivX registration code has not been authorized by the DivX VOD contents provider.
– Register this product to the DivX VOD contents provider.

**Video frame rate not supported**
→ DivX file's frame rate is more than 30 fps.
– Select a file that can be played.

**Audio Format not supported**
→ This type of file is not supported on this product.
– Select a file that can be played.

## External storage device (USB, SD)

**Error-02-9X/-DX**
→ Communication failed.
– Turn the ignition switch OFF and back ON.
– Disconnect the USB storage device.
– Change to a different source. Then, return to the USB storage device.

**Unplayable File**
→ There is no playable file in the external storage device (USB, SD).
– Check that the files in the external storage device (USB, SD) are compatible with this product.
→ Security for the connected external storage device (USB, SD) is enabled.
– Follow the external storage device (USB, SD) instructions to disable security.

**Skipped**
→ The connected external storage device (USB, SD) contains DRM protected files.
– The protected files are skipped.

**Protect**
→ All the files on the connected external storage device (USB, SD) are embedded with DRM.
– Replace the external storage device (USB, SD).

**Incompatible USB**
→ The connected USB storage device is not supported by this product.
– Disconnect your device and replace it with a compatible USB storage device.

**Incompatible SD**
→ The SD memory card is not supported by this product.
– Remove your device and replace it with a compatible SD memory card.
– Format the SD memory card. It is recommended that you use SD Formatter for formatting SD memory cards.

**Check USB**
→ The USB connector or USB cable has short-circuited.
– Check that the USB connector or USB cable is not caught in something or damaged.
→ The connected USB storage device consumes more than maximum allowable current.
– Disconnect the USB storage device and do not use it. Turn the ignition switch to OFF, then to ACC or ON and then connect a compliant USB storage device.

**HUB Error**
→ The connected USB hub is not supported by this product.
– Directly connect the USB storage device to this product.

**No Response**
→ This product cannot recognize the connected USB storage device.
– Disconnect the device and replace it with another USB storage device.

**Video resolution not supported**
→ Files that cannot be played on this product are included in the file.
– Select a file that can be played.

**USB1 was disconnected for device protection. Do not re-insert this USB memory into the unit. Press reset to restart USB memory. (USB2 was disconnected for device protection. Do not re-insert this USB memory into the unit. Press reset to restart USB memory.)**
→ The USB connector or USB cable is short-circuited.
– Check that the USB connector or USB cable is not caught in something or damaged.
→ The connected USB storage device consumes more than maximum allowable current.
– Disconnect the USB storage device and do not use it. Turn the ignition switch to OFF, then to ACC or ON and then connect a compliant USB storage device.
→ The USB interface cable for iPod/iPhone is short-circuited.
– Confirm that the USB interface cable for iPod/iPhone or USB cable is not caught in something or damaged.

**Audio Format not supported**
→ This type of file is not supported on this product.
– Select a file that can be played.

## iPod

**Error-02-6X/-9X/-DX**
→ iPod failure.
– Disconnect the cable from the iPod. Once the iPod's main menu is

displayed, reconnect the iPod and reset it.

**Error-02-67**
→ The iPod firmware version is old.
– Update the iPod version.

## Bluetooth

**Error-10**
→ The power failed for the Bluetooth module of this product.
– Turn the ignition switch to OFF and then to ON.
If the error message is still displayed after performing the above action, please contact your dealer or an authorized Pioneer Service Station.

## Apple CarPlay

**Attempting to connect to Apple CarPlay.**
→ Communication failed and the system is trying to connect.
→ Wait for a while. Then, perform the actions below if the error message is still displayed.
– Restart the iPhone.
– Disconnect the cable from the iPhone, and then connect the iPhone again after a few seconds.
– Turn the ignition switch to OFF and then to ON.
If the error message is still displayed after performing the above action, please contact your dealer or an authorized Pioneer Service Station.

## Android Auto

**Android Auto has stopped.**
→ The connected device is not compatible with Android Auto.
– Check if the device is compatible with Android Auto.
→ The startup of Android Auto failed for some reasons.
– Disconnect the cable from the smartphone, and then connect the smartphone again after a few seconds.
– Restart the smartphone.
– Turn the ignition switch to OFF and then to ON.
If the error message is still displayed after performing the above action, please contact your dealer or an authorized Pioneer Service Station.
→ The time set in this product is not correct.
– Check if the time is correctly set.

**Bluetooth pairing failed. Please pair your Android phone manually.**
→ The Bluetooth pairing failed for some reasons.
– Pair this product with the device manually.

**To use Android Auto, please stop your car and check your Android phone.**
→ The default settings are displayed on the screen of the Android Auto compatible device or images are not output from the Android Auto compatible device.
– Park your vehicle in a safe place, and follow the instructions displayed on the screen. If the error message is still displayed after performing on-screen instructions, please reconnect the device.

# Handling and care of discs

Some basic precautions are necessary when handling your discs.

## Built-in drive and care

- Use only conventional, fully circular discs. Do not use shaped discs.
- Do not use cracked, chipped, warped, or otherwise damaged discs as they may damage the built-in drive.
- Use 12-cm discs. Do not use 8-cm discs or an adapter for 8-cm discs.
- When using discs that can be printed on label surfaces, check the instructions and the warnings of the discs. Depending on the discs, inserting and ejecting may not be possible. Using such discs may result in damage to this equipment.
- Do not attach labels, write on or apply chemicals to the surface of the discs.
- Do not attach commercially available labels or other materials to the discs.
- To clean a disc, wipe it with a soft cloth, moving outward from the center.
- Condensation may temporarily impair the built-in drive's performance.
- Playback of discs may not be possible because of disc characteristics, disc format, recorded application, playback environment, storage conditions and so on.
- Road shocks may interrupt disc playback.
- Read the precautions for discs before using them.

## Ambient conditions for playing a disc

- At extremely high temperatures, a temperature cutout protects this product by switching it off automatically.
- Despite our careful design of the product, small scratches that do not affect actual operation may appear on the disc surface as a result of mechanical wear, ambient conditions for use or handling of the disc. This is not a sign of the malfunction of this product. Consider it to be normal wear and tear.

# Playable discs

## DVD-Video

- DVD is a trademark of DVD Format/Logo Licensing Corporation.
- It is not possible to play DVD Audio discs. This DVD drive may not be able to play all discs bearing the marks shown above.

## CD

## AVCHD recorded discs

This unit is not compatible with discs recorded in AVCHD (Advanced Video Codec High Definition) format. Do not insert in AVCHD discs. If inserted, the disc may not be ejected.

## Playing DualDisc

- DualDiscs are two-sided discs that have a recordable CD for audio on one side and a recordable DVD for video on the other.
- Playback of the DVD side is possible with this product. However, since the CD side of DualDiscs is not physically compatible with the general CD standard, it may not

be possible to play the CD side with this product.
- Frequent loading and ejecting of a DualDisc may result in scratches to the disc.
- Serious scratches can lead to playback problems on this product. In some cases, a DualDisc may become stuck in the disc-loading slot and will not eject. To prevent this, we recommend you refrain from using DualDisc with this product.
- Please refer to the manufacturer for more detailed information about DualDiscs.

## Dolby Digital

This product will down-mix Dolby Digital signals internally and the sound will be output in stereo.
- Manufactured under license from Dolby Laboratories. Dolby, Dolby Audio and the double-D symbol are trademarks of Dolby Laboratories.

# Detailed information for playable media

## Compatibility

### Common notes about disc compatibility

- Certain functions of this product may not be available for some discs.
- Compatibility with all discs is not guaranteed.
- It is not possible to play DVD-RAM discs.
- Playback of discs may become impossible with direct exposure to sunlight, high temperatures, or depending on the storage conditions in the vehicle.

### DVD-Video discs

- DVD-Video discs that have incompatible region numbers cannot be played on this DVD drive. The region number of the player can be found on this product's chassis.

### DVD-R/DVD-RW/DVD-R SL (Single Layer)/DVD-R DL (Dual Layer) discs

- Unfinalized discs which have been recorded with the Video format (video mode) cannot be played back.
- Discs which have been recorded with the Video Recording format (VR mode) cannot be played back.
- DVD-R DL (Dual Layer) discs which have been recorded with Layer Jump recording cannot be played back.
- For detailed information about recording mode, please contact the manufacturer of media, recorders, or writing software.

### CD-R/CD-RW discs

- Unfinalized discs cannot be played back.
- It may not be possible to playback CD-R/CD-RW discs recorded on a music CD recorder or a computer because of disc characteristics, scratches or dirt on the disc, or dirt, scratches or condensation on the lens of the built-in drive.
- Playback of discs recorded on a computer may not be possible, depending on the recording device, writing software, their settings, and other environmental factors.
- Please record with the correct format. (For details, please contact manufacturer of media, recorders, or writing software.)
- Titles and other text information recorded on a CD-R/CD-RW disc may not be displayed by this product (in the case of audio data (CD-DA)).
- Read the precautions with CD-R/CD-RW discs before using them.

### Common notes about the external storage device (USB, SD)

- Do not leave the external storage device (USB, SD) storage device in any location with high temperatures.
- Depending on the kind of the external storage device (USB, SD) storage device you use, this product may not recognize the storage device or files may not be played back properly.
- The text information of some audio and video files may not be correctly displayed.
- File extensions must be used properly.
- There may be a slight delay when starting playback of files on an external storage device (USB, SD) storage device with complex folder hierarchies.
- Operations may vary depending on the kind of an external storage device (USB, SD) storage device.
- It may not be possible to play some music files from SD or USB because of file characteristics, file format, recorded application, playback environment, storage conditions, and so on.
- Copyright protected files cannot be played back.

### SD memory cards

- For details about SD memory card compatibility with this product, refer to Specifications (page 72).
- Some SD memory cards may not be recognized by this unit even if the SD memory cards can be recognized by a computer. Formatting the SD memory cards using a dedicated formatter may resolve the problem. SD memory cards formatted using the standard formatting function on a computer do not comply with the SD standard. Problems such as that those cards cannot be read or written could occur. It is recommended that you use a dedicated formatter to avoid such problems. All of the data stored on an SD memory card will be deleted when the card is formatted. Back up any needed data beforehand as necessary. A dedicated formatter for SD memory cards can be obtained from the following site.
https://www.sdcard.org/
- This product is not compatible with the Multi Media Card (MMC).

### USB storage device

- For details about USB storage device compatibility with this product, refer to Specifications (page 72).
- Protocol: bulk
- You cannot connect a USB storage device to this product via a USB hub.
- Partitioned USB storage device is not compatible with this product.
- Firmly secure the USB storage device when driving. Do not let the USB storage device fall onto the floor, where it may become jammed under the brake or gas pedal.
- There may be a slight delay when starting playback of audio files encoded with image data.
- Some USB storage devices connected to this product may generate noise on the radio.
- Do not connect anything other than the USB storage device.

### Common notes about DivX files

- Only DivX files downloaded from DivX partner sites are guaranteed for proper operation. Unauthorized DivX files may not operate properly.
- DRM rental files cannot be operated until playing back is started.
- This product corresponds to a DivX file display of up to 1 590 minutes 43 seconds. Search operations beyond this time limit are prohibited.
- DivX VOD file playback requires supplying the ID code of this product to the DivX VOD provider. Regarding the ID

code, refer to Displaying your DivX VOD registration code on page 59.
- For details on the DivX video versions that can be played on this product, refer to Specifications (page 72).
- For more details about DivX, visit the following site: http://www.divx.com/

### DivX subtitle files

- Srt format subtitle files with the extension ".srt" can be used.
- Only one subtitle file can be used for each DivX file. Multiple subtitle files cannot be associated.
- Subtitle files that are named with the same character string as the DivX file before the extension are associated with the DivX file. The character strings before the extension must be exactly the same. However, if there is only one DivX file and one subtitle file in a single folder, the files are associated even if the file names are not the same.
- The subtitle file must be stored in the same folder as the DivX file.
- Up to 255 subtitle files may be used. Any more subtitle files will not be recognized.
- Up to 64 characters can be used for the name of the subtitle file, including the extension. If more than 64 characters are used for the file name, the subtitle file may not be recognized.
- The character code for the subtitle file should comply with ISO-8859-1. Using characters other than ISO-8859-1 may cause the characters to be displayed incorrectly.
- The subtitles may not be displayed correctly if the displayed characters in the subtitle file include control code.
- For materials that use a high transfer rate, the subtitles and video may not be completely synchronized.
- If multiple subtitles are programmed to display within a very short time frame, such as 0.1 seconds, the subtitles may not be displayed at the correct time.

## Media compatibility chart

### General

- Files may not be played back properly depending on the environment in which the file was created or on the contents of the file.
- This product may not play back files, depending on the application used to encode the files.
- This product may not operate correctly, depending on the application used to encode WMA files.
- Depending on the version of Windows Media™ Player used to encode WMA files, album names and other text information may not be correctly displayed.
- There may be a slight delay when starting playback of audio files encoded with image data.
- This product is not compatible with packet write data transfer.
- This product can recognize up to 32 characters, beginning with the first character, including extension for the file and folder name. Depending on the display area, this product may try to display them with a reduced font size. However, the maximum number of the characters that you can display varies according to the width of each character, and of the display area.
- Folder selection sequence or other operations may be altered, depending on the encoding or writing software.
- Regardless of the length of blank section between the songs of original recording, compressed audio discs play with a short pause between songs.
- Maximum playback time of audio file stored in the disc: 60 h
- Maximum playback time of audio file stored on an external storage device (USB, SD): 7.5 h (450 minutes)
- This product assigns folder numbers. The user cannot assign folder numbers.

### CD-R/-RW

| | |
|---|---|
| CODEC FORMAT | MP3, WMA, AAC, DivX, MPEG1, MPEG2, MPEG4 |
| FILE SYSTEM | ISO 9660 LEVEL 1, level 2, Romeo Joliet |
| MAX. DIRECTORY | No limit |
| MAX. FOLDER No. | 700 |
| MAX. FILE No. | 999 |

### DVD-R/-R SL/-R DL/DVD-RW

| | |
|---|---|
| CODEC FORMAT | MP3, WMA, AAC, MPEG2, MPEG4 |
| FILE SYSTEM | ISO 9660 LEVEL 1, level 2, Romeo Joliet |
| MAX. FOLDER No. | 700 |
| MAX. FILE No. | 3 500 |

### USB storage device/SD memory card

| | |
|---|---|
| CODEC FORMAT | MP3, WMA, AAC, WAV, FLAC, H.264, MPEG2, MPEG4, WMV, FLV, MKV, JPEG |
| FILE SYSTEM | FAT16/32/NTFS |
| MAX. DIRECTORY | 8 |
| MAX. FOLDER No. | FAT16, FAT32: 65 536<br>NTFS: No limit |
| MAX. FILE No. | FAT16, FAT32: 65 536<br>NTFS: No limit |

### MP3 compatibility

- Ver. 2.x of ID3 tag is prioritized when both Ver. 1.x and Ver. 2.x exist.
- This product is not compatible with the following: MP3i (MP3 interactive), mp3 PRO, m3u playlist

| | |
|---|---|
| SAMPLING FREQUENCY | 16 kHz to 48 kHz |
| TRANSMISSION RATE | 8 kbps to 320 kbps, VBR |
| ID3 TAG | USB: v1,v1.1,v2.2,v2.3,v2.4<br>Disc: v1,v1.1,v2.2,v2.3 |

### WMA compatibility

- This product is not compatible with the following: Windows Media™ Audio 9 Professional, Lossless, Voice

| | |
|---|---|
| SAMPLING FREQUENCY | USB: 32 kHz to 48 kHz<br>Disc: 8 kHz to 48kHz |
| TRANSMISSION RATE | USB: 48 kbps to 320 kbps (CBR), VBR<br>Disc: 5 kbps to 320 kbps (CBR), VBR |

### WAV compatibility

- The sampling frequency shown in the display may be rounded.
- WAV files on the CD-R/-RW, DVD-R/-RW/-R SL/-R DL cannot be played.

| | |
|---|---|
| DECODING FORMAT | LPCM |
| SAMPLING FREQUENCY | 16 kHz to 48 kHz |
| TRANSMISSION RATE | Approx. 1.5 Mbps |

### AAC compatibility

- This product plays back AAC files encoded by iTunes.

| | |
|---|---|
| SAMPLING FREQUENCY | 11.025 kHz to 48 kHz |
| TRANSMISSION RATE | USB: 16 kbps to 320 kbps (CBR)<br>Disc: 8 kbps to 320 kbps (CBR) |

### FLAC compatibility

- FLAC files on the CD-R/-RW, DVD-R/-RW/-R SL/-R DL cannot be played.

| | |
|---|---|
| SAMPLING FREQUENCY | 8 kHz to 192 kHz |

### DivX compatibility

- This product is not compatible with the following: DivX Ultra format, DivX files without video data, DivX files encoded with LPCM (Linear PCM) audio codec
- Depending on the file information composition, such as the number of audio streams, there may be a slight delay in the start of playback on discs.
- If a file contains more than 4 GB, playback stops before the end.
- Some special operations may be prohibited because of the composition of DivX files.
- Files with high transfer rates may not be played back correctly. The standard transfer rate is 4 Mbps for CDs and 10.08 Mbps for DVDs.
- DivX files on the external storage device (USB, SD) cannot be played.

### CD-R/-RW, DVD-R/-R SL/-R DL/DVD-RW

| | |
|---|---|
| EXTENSION | .avi/.divx |
| PROFILE | Home Theater Profile |
| MAX RESOLUTION | 720 x 576 |

### Audio and video files compatibility (USB, SD)

- Files may not be able to be played back depending on the bit rate.
- Only USB storage devices can play back VOB files.

**.avi**

| | |
|---|---|
| Compatible video codec | MPEG4, H.264, H.263, Xvid |
| Maximum resolution | 1 920 x 1 080 |
| Maximum frame rate | 30 fps |

**.mp4**

| | |
|---|---|
| Compatible video codec | MPEG4, H.264, H.263 |
| Maximum resolution | 1 920 x 1 080 |
| Maximum frame rate | 30 fps |

**.3gp**

| | |
|---|---|
| Compatible video codec | MPEG4, H.264, H.263 |
| Maximum resolution | 1 920 x 1 080 |
| Maximum frame rate | 30 fps |

**.mkv**

| | |
|---|---|
| Compatible video codec | MPEG4, H.264, Xvid |
| Maximum resolution | 1 920 x 1 080 |
| Maximum frame rate | 30 fps |

**.mov**

| | |
|---|---|
| Compatible video codec | MPEG4, H.264, H.263 |
| Maximum resolution | 1 920 x 1 080 |
| Maximum frame rate | 30 fps |

**.flv**

| | |
|---|---|
| Compatible video codec | H.264 |
| Maximum resolution | 1 920 x 1 080 |
| Maximum frame rate | 30 fps |

**.f4v**

| | |
|---|---|
| Compatible video codec | H.264 |
| Maximum resolution | 1 920 x 1 080 |
| Maximum frame rate | 30 fps |

**.asf**

| | |
|---|---|
| Compatible video codec | WMV/VC-1 |
| Maximum resolution | 1 920 x 1 080 |
| Maximum frame rate | 30 fps |

**.wmv**

| | |
|---|---|
| Compatible video codec | WMV/VC-1 |
| Maximum resolution | 1 920 x 1 080 |
| Maximum frame rate | 30 fps |

**.vob**

| | |
|---|---|
| Compatible video codec | MPEG2, H.264 |
| Maximum resolution | 1 920 x 1 080 |
| Maximum frame rate | 30 fps |

## Bluetooth

The *Bluetooth*® word mark and logos are registered trademarks owned by the Bluetooth SIG, Inc. and any use of such marks by PIONEER CORPORATION is under license. Other trademarks and trade names are those of their respective owners.

## SiriusXM® Satellite Radio

Sirius, XM and all related marks and logos are trademarks of Sirius XM Radio Inc. All rights reserved.

## Wi-Fi

The Wi-Fi CERTIFIED™ Logo is a certification mark of Wi-Fi Alliance®.

## HD Radio™ Technology

HD Radio Technology manufactured under license from iBiquity Digital Corporation. U.S. and Foreign Patents. For patents see http://dts.com/patents. HD Radio and the HD, HD Radio, and "ARC" logos are registered trademarks or trademarks of iBiquity Digital Corporation in the United States and/or other countries.

## SDXC

SDXC Logo is a trademark of SD-3C, LLC.

## WMA/WMV

Windows Media is either a registered trademark or trademark of Microsoft Corporation in the United States and/or other countries.

- This product includes technology owned by Microsoft Corporation and cannot be used or distributed without a license from Microsoft Licensing, Inc.

## FLAC

Copyright © 2000-2009 Josh Coalson
Copyright © 2011-2013 Xiph.Org Foundation
Redistribution and use in source and binary forms, with or without modification, are permitted provided that the following conditions are met:
– Redistributions of source code must retain the above copyright notice, this list of conditions and the following disclaimer.
– Redistributions in binary form must reproduce the above copyright notice, this list of conditions and the following disclaimer in the documentation and/or other materials provided with the distribution.
– Neither the name of the Xiph.org Foundation nor the names of its contributors may be used to endorse or promote products derived from this software without specific prior written permission.
THIS SOFTWARE IS PROVIDED BY THE COPYRIGHT HOLDERS AND CONTRIBUTORS "AS IS" AND ANY EXPRESS OR IMPLIED WARRANTIES, INCLUDING, BUT NOT LIMITED TO, THE IMPLIED WARRANTIES OF MERCHANTABILITY AND FITNESS FOR A PARTICULAR PURPOSE ARE DISCLAIMED. IN NO EVENT SHALL THE FOUNDATION OR CONTRIBUTORS BE LIABLE FOR ANY DIRECT, INDIRECT, INCIDENTAL, SPECIAL, EXEMPLARY, OR CONSEQUENTIAL DAMAGES (INCLUDING, BUT NOT LIMITED TO, PROCUREMENT OF SUBSTITUTE GOODS OR SERVICES; LOSS OF USE, DATA, OR PROFITS; OR BUSINESS INTERRUPTION) HOWEVER CAUSED AND ON ANY THEORY OF LIABILITY, WHETHER IN CONTRACT, STRICT LIABILITY, OR TORT (INCLUDING NEGLIGENCE OR OTHERWISE) ARISING IN ANY WAY OUT OF THE USE OF THIS SOFTWARE, EVEN IF ADVISED OF THE POSSIBILITY OF SUCH DAMAGE.

## DivX

DIVX

DivX® Home Theater Certified devices have been tested for high-quality DivX Home Theater video playback (including .avi, .divx). When you see the DivX logo, you know you have the freedom to play your favorite videos.
DivX®, DivX Certified® and associated logos are trademarks of DivX, LLC and are used under license.
This DivX Certified® device has passed rigorous testing to ensure it plays DivX® video.
To play purchased DivX movies, first register your device at vod.divx.com. Find your registration code in the DivX VOD section of your device setup menu.

## AAC

AAC is short for Advanced Audio Coding and refers to an audio compression technology standard used with MPEG-2 and MPEG-4. Several applications can be used to encode AAC files, but file formats and extensions differ depending on the application which is used to encode. This unit plays back AAC files encoded by iTunes.

## Google™, Google Play, Android

Google, Google Play and Android are trademarks of Google LLC.

## Android Auto

androidauto

Android Auto is a trademark of Google LLC.

## Detailed information regarding connected iPod devices

- Pioneer accepts no responsibility for data lost from an iPod, even if that data is lost while using this product. Please back up your iPod data regularly.
- Do not leave the iPod in direct sunlight for extended amounts of time. Extended exposure to direct sunlight can result in iPod malfunction due to the resulting high temperature.
- Do not leave the iPod in any location with high temperatures.
- Firmly secure the iPod when driving. Do not let the iPod fall onto the floor, where it may become jammed under the brake or gas pedal.
- For details, refer to the iPod manuals.

### iPhone and iPod

Made for iPod iPhone

"Made for iPod" and "Made for iPhone" mean that an electronic accessory has been designed to connect specifically to iPod or iPhone, respectively, and has been certified by the developer to meet Apple performance standards.
Apple is not responsible for the operation of this device or its compliance with safety and regulatory standards.
Please note that the use of this accessory with iPod or iPhone may affect wireless performance.
iPhone, iPod, iPod classic, iPod nano, and iPod touch are trademarks of Apple Inc., registered in the U.S. and other countries.

### Lightning

Lightning is a trademark of Apple Inc.

### App Store

App Store is a service mark of Apple Inc.

### iOS

iOS is a trademark on which Cisco holds the trademark right in the US and certain other countries.

### iTunes

iTunes is a trademark of Apple Inc., registered in the U.S. and other countries.

### Apple Music

Apple Music is a trademark of Apple Inc., registered in the U.S. and other countries.

### Apple CarPlay

Works with Apple CarPlay

Apple CarPlay is a trademark of Apple Inc.

Use of the Apple CarPlay logo means that a vehicle user interface meets Apple performance standards. Apple is not responsible for the operation of this vehicle or its compliance with safety and regulatory standards. Please note that the use of this product with iPhone or iPod may affect wireless performance.

## Using app-based connected content

**Important**

Requirements to access app-based connected content services using this product:

- Latest version of the Pioneer compatible connected content application(s) for the smartphone, available from the service provider, downloaded to your smartphone.
- A current account with the content service provider.
- Smartphone Data Plan.
  Note: if the Data Plan for your smartphone does not provide for unlimited data usage, additional charges from your carrier may apply for accessing app-based connected content via 3G, EDGE and/or LTE (4G) networks.
- Connection to the Internet via 3G, EDGE, LTE (4G) or Wi-Fi network.
- Optional Pioneer adapter cable connecting your iPhone to this product.

**Limitations:**

- Access to app-based connected content will depend on the availability of cellular and/or Wi-Fi network coverage for the purpose of allowing your smartphone to connect to the Internet.
- Service availability may be geographically limited to the region. Consult the connected content service provider for additional information.
- Ability of this product to access connected content is subject to change without notice and could be affected by any of the following: compatibility issues with future firmware versions of smartphone; compatibility issues with future versions of the connected content application(s) for the smartphone; changes to or discontinuation of the connected Content application(s) or service by its provider.
- Pioneer is not liable for any issues that may arise from incorrect or flawed app-based content.
- The content and functionality of the supported applications are the responsibility of the App providers.
- In AppRadio Mode +, Apple CarPlay and Android Auto, functionality through the product is limited while driving, with available functions determined by the App providers.
- Availability of AppRadio Mode +, Apple CarPlay and Android Auto functionalities is determined by the App provider, and not determined by Pioneer.
- AppRadio Mode +, Apple CarPlay and Android Auto allow access to applications other than those listed (subject to limitations while driving), but the extent to which content can be used is determined by the App providers.

## Pandora®

Pandora, the Pandora logo, and the Pandora trade dress are trademarks or registered trademarks of Pandora Media, Inc. Used with permission.
Pandora is only available in certain countries. Please visit
http://www.pandora.com/legal
for more information.

## HDMI

HDMI®
HIGH-DEFINITION MULTIMEDIA INTERFACE

The terms HDMI and HDMI High-Definition Multimedia Interface, and the HDMI Logo are trademarks or registered trademarks of HDMI Licensing Administrator, Inc. in the United States and other countries.

## Notice regarding video viewing

Remember that use of this system for commercial or public viewing purposes may constitute an infringement on the author's rights as protected by the Copyright Law.

## Notice regarding DVD-Video viewing

This item incorporates copy protection technology that is protected by U.S. patents and other intellectual property rights of Rovi Corporation. Reverse engineering and disassembly are prohibited.

## Notice regarding MP3 file usage

Supply of this product only conveys a license for private, non-commercial use and does not convey a license nor imply any right to use this product in any commercial (i.e. revenue-generating) real time broadcasting (terrestrial, satellite, cable and/or any other media), broadcasting/streaming via internet, intranets and/or other networks or in other electronic content distribution systems, such as pay-audio or audio-on-demand applications. An independent license for such use is required. For details, please visit http://www.mp3licensing.com.

## Notice regarding open source licenses

For details about the open source licenses for the functions that this product is equipped with, please visit
http://www.oss-pioneer.com/car/multimedia/

## Using the LCD screen correctly

### Handling the LCD screen

- When the LCD screen is subjected to direct sunlight for a long period of time, it will become very hot, resulting in possible damage to the LCD screen. When not using this product, avoid exposing it to direct sunlight as much as possible.
- The LCD screen should be used within the temperature ranges shown in Specifications (page 72).
- Do not use the LCD screen at temperatures higher or lower than the operating temperature range, because the LCD screen may not operate normally and could be damaged.
- The LCD screen is exposed in order to increase its visibility within the vehicle. Please do not press strongly on it as this may damage it.

- Do not push the LCD screen with excessive force as this may scratch it.
- Never touch the LCD screen with anything besides your finger when operating the touch panel functions. The LCD screen can scratch easily.

## Liquid crystal display (LCD) screen

- If the LCD screen is near the vent of an air conditioner, make sure that air from the air conditioner is not blowing on it. Heat from the heater may break the LCD screen, and cool air from the cooler may cause moisture to form inside this product, resulting in possible damage.
- Small black dots or white dots (bright dots) may appear on the LCD screen. These are due to the characteristics of the LCD screen and do not indicate a malfunction.
- The LCD screen will be difficult to see if it is exposed to direct sunlight.
- When using a cellular phone, keep the antenna of the cellular phone away from the LCD screen to prevent disruption of the video in the form of disturbances such as spots or colored stripes.

## Maintaining the LCD screen

- When removing dust from or cleaning the LCD screen, first turn this product off and then wipe the screen with a soft dry cloth.
- When wiping the LCD screen, take care not to scratch the surface. Do not use harsh or abrasive chemical cleaners.

## LED (light-emitting diode) backlight

A light emitting diode is used inside the display to illuminate the LCD screen.

- At low temperatures, using the LED backlight may increase image lag and degrade the image quality because of the characteristics of the LCD screen. Image quality will improve with an increase in temperature.
- The product lifetime of the LED backlight is more than 10 000 hours. However, it may decrease if used in high temperatures.
- If the LED backlight reaches the end of its product lifetime, the screen will become dimmer and the image will no longer be visible. In that case, please consult your dealer or the nearest authorized Pioneer Service Station.

# Specifications

### General

Rated power source:
14.4 V DC (10.8 V to 15.1 V allowable)
Grounding system:
Negative type
Maximum current consumption:
10.0 A
Dimensions (W × H × D):
Chassis D:
178 mm × 100 mm × 165 mm (7 in. × 3-7/8 in. × 6-1/2 in.)
Nose:
171 mm × 97 mm × 18 mm (6-3/4 in. × 3-7/8 in. × 3/4 in.)
Weight:
2.1 kg (4.6 lbs)

### Display

Screen size/aspect ratio:
6.94 inch wide/17.2:9 (effective display area: 156.24 mm × 81.6 mm) (6-1/8 in. × 3-1/4 in.)
Pixels:
1 209 600 (2 520 × 480)
Display method:
TFT Active matrix driving
Color system:
PAL/NTSC/PAL-M/PAL-N/SECAM compatible
Durable temperature range:
-20 ˚C to +80 ˚C (-4 ˚F to +176 ˚F) (Power off)

### Audio

Maximum power output:
- 50 W × 4 ch/4 Ω
- 50 W × 2 ch/4 Ω + 70 W × 1 ch/2 Ω (for subwoofer)

Continuous power output:
22 W × 4 (50 Hz to 15 kHz, 5 %THD, 4 Ω LOAD, Both Channels Driven)
Load impedance:
4 Ω (4 Ω to 8 Ω allowable)
Preout output level (max): 4.0 V
Equalizer (13-Band Graphic Equalizer):
Frequency:
50 Hz/80 Hz/125 Hz/200 Hz/315 Hz/500 Hz/800 Hz/1.25 kHz/2 kHz/3.15 kHz/5 kHz/8 kHz/12.5 kHz
Gain: ±12 dB
<Standard Mode>
HPF:
Frequency:
25 Hz/31.5 Hz/40 Hz/50 Hz/63 Hz/80 Hz/100 Hz/125 Hz/160 Hz/200 Hz/250 Hz
Slope:
-6 dB/oct, -12 dB/oct, -18 dB/oct, -24 dB/oct, OFF
Subwoofer/LPF:
Frequency:
25 Hz/31.5 Hz/40 Hz/50 Hz/63 Hz/80 Hz/100 Hz/125 Hz/160 Hz/200 Hz/250 Hz
Slope:
-6 dB/oct, -12 dB/oct, -18 dB/oct, -24 dB/oct, -30 dB/oct, -36 dB/oct, OFF
Gain:
+10 dB to -24 dB (1 dB/step)
Phase: Normal/Reverse
Time alignment:
0 to 140 step (1 inch/step)
Bass boost:
Gain: +12 dB to 0 dB
Speaker level:
+10 dB to -24 dB (1 dB/step)
<Network Mode>
HPF (High):
Frequency:
1.25 kHz/1.6 kHz/2 kHz/2.5 kHz/3.15 kHz/4 kHz/5 kHz/6.3 kHz/8 kHz/10 kHz/12.5 kHz
Slope:
-6 dB/oct, -12 dB/oct, -18 dB/oct, -24 dB/oct
HPF (Mid):
Frequency:
25 Hz/31.5 Hz/40 Hz/50 Hz/63 Hz/80 Hz/100 Hz/125 Hz/160 Hz/200 Hz/250 Hz
Slope:
-6 dB/oct, -12 dB/oct, -18 dB/oct, -24 dB/oct, OFF
LPF (Mid):
Frequency:
1.25 kHz/1.6 kHz/2 kHz/2.5 kHz/3.15 kHz/4 kHz/5 kHz/6.3 kHz/8 kHz/10 kHz/12.5 kHz
Slope:
-6 dB/oct, -12 dB/oct, -18 dB/oct, -24 dB/oct, OFF
Subwoofer:
Frequency:
25 Hz/31.5 Hz/40 Hz/50 Hz/63 Hz/80 Hz/100 Hz/125 Hz/160 Hz/200 Hz/250 Hz
Slope:
-6 dB/oct, -12 dB/oct, -18 dB/oct, -24 dB/oct, -30 dB/oct, -36 dB/oct, OFF
Gain:
+10 dB to -24 dB (1 dB/step)
Phase: Normal/Reverse
Time alignment:
0 to 140 step (1 inch/step)
Bass boost:
Gain: +12 dB to 0 dB
Speaker level:
+10 dB to -24 dB (1 dB/step)

## DVD drive

System:
DVD-V, VCD, CD, MP3, WMA, AAC, DivX, MPEG player
Usable discs:
DVD-VIDEO, VIDEO-CD, CD, CD-R, CD-RW, DVD-R, DVD-RW, DVD-R DL
Region number: 1
Frequency response:
5 Hz to 44 000 Hz (with DVD, at sampling frequency 96 kHz)
Signal-to-noise ratio:
96 dB (1 kHz) (IHF-A network) (RCA level)
Video output level:
Video:
1.0 V p-p/75 Ω (±0.2 V)
Number of channels: 2 (stereo)
MP3 decoding format:
MPEG-1 & 2 & 2.5 Audio Layer 3
WMA decoding format:
Ver. 7, 8, 9 (2 ch audio) (Windows Media Player)
AAC decoding format:
MPEG-4 AAC (iTunes encoded only): .m4a (Ver. 11 and earlier)
DivX decoding format:
Home Theater Ver. 3.11, 4.x, 5.x, 6.x: .avi, .divx
MPEG video decoding format:
MPEG1:
.mpg, .mpeg, .dat
MPEG-2 PS:
.mpg, .mpeg
MPEG4 part 2 (visual), MS-MPEG4 Ver. 3:
.avi

## USB

USB standard spec:
USB 1.1, USB 2.0 high speed
Max current supply: 1.6 A
USB Class:
MSC (Mass Storage Class), iPod (Audio Class, HID Class)
File system: FAT16, FAT32, NTFS

<USB audio>
MP3 decoding format:
MPEG-1/Layer-1, MPEG-1/Layer-2, MPEG-1/Layer-3
MPEG-2/Layer-1, MPEG-2/Layer-2, MPEG-2/Layer-3
MPEG-2.5/Layer-3
WMA decoding format:
WMA 10 Std , WMA 10 Pro, WMA 9 Lossless
AAC decoding format:
MPEG-2 AAC-LC, MPEG-4 AACLC
FLAC signal format:
Ver. 1.3.0
WAV signal format:
Linear PCM

<USB image>
JPEG decoding format:
JPEG

<USB video>
H.264 video decoding format:
Base Line Profile, Main Profile, High Profile
WMV video decoding format:
VC-1 SP/MP/AP, WMV 7/8
MPEG4 video decoding format:
Simple Profile, Advanced Simple Profile (except GMC)

## SD

Compatible physical format:
Version 2.0
File system: FAT16, FAT32, NTFS

<SD audio>
MP3 decoding format:
MPEG-1/Layer 1, MPEG-1/Layer 2, MPEG-1/Layer 3,
MPEG-2/Layer 1, MPEG-2/Layer 2, MPEG-2/Layer 3,
MPEG-2.5/Layer 3
WMA decoding format:
WMA 10 Std, WMA 10 Pro, WMA 9 Lossless
AAC decoding format:
MPEG-2 AAC-LC, MPEG-4 AAC-LC
WAV signal format:
Linear PCM
FLAC signal format:
Ver. 1.3.0

<SD image>
JPEG decoding format:
JPEG

<SD video>
H.264 video decoding format:
Base Line Profile, Main Profile, High Profile
WMV video decoding format:
VC-1 SP/MP/AP, WMV 7/8
MPEG4 video decoding format:
Simple Profile, Advanced Simple Profile (except GMC)

## Bluetooth

Version:
Bluetooth 4.1
Output power:
+4 dBm Max. (Power class 2)
Frequency band:
2 400 MHz to 2 483.5 MHz

## FM tuner

Frequency range:
87.9 MHz to 107.9 MHz
Usable sensitivity:
11 dBf (0.8 µV/75 Ω, mono, S/N: 30 dB)
Signal-to-noise ratio:
80 dB (digital broadcasting) (IHF-A network)
72 dB (analog broadcasting) (IHF-A network)

## AM tuner

Frequency range:
530 kHz to 1 710 kHz
Usable sensitivity:
28 µV (S/N: 20 dB)
Signal-to-noise ratio:
80 dB (digital broadcasting) (IHF-A network)
62 dB (analog broadcasting) (IHF-A network)

## Wi-Fi

Frequency channel:
2.4 GHz , 5 GHz (U-NII-3)
Security:
WPA 2 (personal)

Output power:
+16 dBm Max (2.4 GHz)
+13 dBm Max (5 GHz)

## GPS

GNSS receiver
System:
GPS L1C/Ac, SBAS L1C/A, GLONASS L1OF SPS (Standard Positioning Service)
Reception system:
72 channel Multi-channel reception system
Reception frequency:
1 575.42 MHz/1 602 MHz
Sensitivity:
-140 dBm (typ)
Frequency:
Approx. once per second
GPS antenna
Antenna:
Micro strip flat antenna/right-handed helical polarization
Antenna cable:
3.55 m (11ft. 7in.)
Dimensions (W × H × D):
33 mm × 14.7 mm × 36 mm (1-1/4 in. × 1/2 in. × 1-3/8 in.)
Weight:
73.7 g (0.2 lbs)

## CEA2006 Specifications

Power output:
14 W RMS × 4 Channels (4 Ω and ≦ 1 % THD+N)

S/N ratio:
91 dBA (reference: 1 W into 4 Ω)

**NOTE**

Specifications and design are subject to possible modifications without notice due to improvements.

*Register your product at*

**http://www.pioneerelectronics.com**

*in Canada* **http://www.pioneerelectronics.ca**


**PIONEER CORPORATION**
28-8, Honkomagome 2-chome, Bunkyo-ku,
Tokyo 113-0021, Japan

**PIONEER ELECTRONICS (USA) INC.**
P.O. Box 1540, Long Beach, California 90801-1540, U.S.A.
TEL: (800) 421-1404

**PIONEER EUROPE NV**
Haven 1087, Keetberglaan 1, B-9120 Melsele, Belgium/Belgique
TEL: (0) 3/570.05.11

**PIONEER ELECTRONICS ASIACENTRE PTE. LTD.**
2 Jalan Kilang Barat, #07-01, Singapore 159346
TEL: 65-6378-7888

**PIONEER ELECTRONICS AUSTRALIA PTY. LTD.**
5 Arco Lane, Heatherton, Victoria, 3202 Australia
TEL: (03) 9586-6300

**PIONEER ELECTRONICS DE MÉXICO S.A. DE C.V.**
Blvd. Manuel Ávila Camacho 138, 10 piso
Col.Lomas de Chapultepec, México, D.F. 11000
Tel: 52-55-9178-4270, Fax: 52-55-5202-3714

**先鋒股份有限公司**
台北市內湖區瑞光路407號8樓
電話： 886-(0)2-2657-3588

**先鋒電子（香港）有限公司**
香港九龍長沙灣道909號5樓
電話： 852-2848-6488


© 2018 PIONEER CORPORATION. All rights reserved.

<CRI1024-A> UC