WSS.book Page 1 Friday, March 7, 2003 5:57 PM

Pioneer sound.vision.soul

Digital Wireless Speaker System

Ensemble d'enceintes sans fil pour transmission numérique

XW-DV515

Digital Wireless Rear Speaker System

Ensemble d'enceintes arrière sans fil pour transmission numérique

XW-HTD630

Operating Instructions
Mode d'emploi

IMPORTANT

CAUTION

RISK OF ELECTRIC SHOCK DO NOT OPEN

The lightning flash with arrowhead symbol, within an equilateral triangle, is intended to alert the user to the presence of uninsulated "dangerous voltage" within the product's enclosure that may be of sufficient magnitude to constitute a risk of electric shock to persons.

CAUTION:
TO PREVENT THE RISK OF ELECTRIC SHOCK, DO NOT REMOVE COVER (OR BACK). NO USER-SERVICEABLE PARTS INSIDE. REFER SERVICING TO QUALIFIED SERVICE PERSONNEL.

The exclamation point within an equilateral triangle is intended to alert the user to the presence of important operating and maintenance (servicing) instructions in the literature accompanying the appliance.

H002_En

IMPORTANT SAFETY INSTRUCTIONS

READ INSTRUCTIONS — All the safety and operating instructions should be read before the product is operated.

RETAIN INSTRUCTIONS — The safety and operating instructions should be retained for future reference.

HEED WARNINGS — All warnings on the product and in the operating instructions should be adhered to.

FOLLOW INSTRUCTIONS — All operating and use instructions should be followed.

CLEANING — Unplug this product from the wall outlet before cleaning. The product should be cleaned only with a polishing cloth or a soft dry cloth. Never clean with furniture wax, benzine, insecticides or other volatile liquids since they may corrode the cabinet.

ATTACHMENTS — Do not use attachments not recommended by the product manufacturer as they may cause hazards.

WATER AND MOISTURE — Do not use this product near water — for example, near a bathtub, wash bowl, kitchen sink, or laundry tub; in a wet basement; or near a swimming pool; and the like.

ACCESSORIES — Do not place this product on an unstable cart, stand, tripod, bracket, or table. The product may fall, causing serious injury to a child or adult, and serious damage to the product. Use only with a cart, stand, tripod, bracket, or table recommended by the manufacturer, or sold with the product. Any mounting of the product should follow the manufacturer's instructions, and should use a mounting accessory recommended by the manufacturer.

CART — A product and cart combination should be moved with care. Quick stops, excessive force, and uneven surfaces may cause the product and cart combination to overturn.

VENTILATION — Slots and openings in the cabinet are provided for ventilation and to ensure reliable operation of the product and to protect it from overheating, and these openings must not be blocked or covered. The openings should never be blocked by placing the product on a bed, sofa, rug, or other similar surface. This product should not be placed in a built-in installation such as a bookcase or rack unless proper ventilation is provided or the manufacturer's instructions have been adhered to.

POWER SOURCES — This product should be operated only from the type of power source indicated on the marking label. If you are not sure of the type of power supply to your home, consult your product dealer or local power company.

LOCATION – The appliance should be installed in a stable location.

NONUSE PERIODS – The power cord of the appliance should be unplugged from the outlet when left unused for a long period of time.

GROUNDING OR POLARIZATION

- If this product is equipped with a polarized alternating current line plug (a plug having one blade wider than the other), it will fit into the outlet only one way. This is a safety feature. If you are unable to insert the plug fully into the outlet, try reversing the plug. If the plug should still fail to fit, contact your electrician to replace your obsolete outlet. Do not defeat the safety purpose of the polarized plug.
- If this product is equipped with a three-wire grounding type plug, a plug having a third (grounding) pin, it will only fit into a grounding type power outlet. This is a safety feature. If you are unable to insert the plug into the outlet, contact your electrician to replace your obsolete outlet. Do not defeat the safety purpose of the grounding type plug.

POWER-CORD PROTECTION — Power-supply cords should be routed so that they are not likely to be walked on or pinched by items placed upon or against them, paying particular attention to cords at plugs, convenience receptacles, and the point where they exit from the product.

LIGHTNING — For added protection for this product during a lightning storm, or when it is left unattended and unused for long periods of time, unplug it from the wall outlet and disconnect the antenna or cable system. This will prevent damage to the product due to lightning and power-line surges.

POWER LINES — An outside antenna system should not be located in the vicinity of overhead power lines or other electric light or power circuits, or where it can fall into such power lines or circuits. When installing an outside antenna system, extreme care should be taken to keep from touching such power lines or circuits as contact with them might be fatal.

OVERLOADING — Do not overload wall outlets, extension cords, or integral convenience receptacles as this can result in a risk of fire or electric shock.

OBJECT AND LIQUID ENTRY — Never push objects of any kind into this product through openings as they may touch dangerous voltage points or short-out parts that could result in a fire or electric shock. Never spill liquid of any kind on the product.

SERVICING — Do not attempt to service this product yourself as opening or removing covers may expose you to dangerous voltage or other hazards. Refer all servicing to qualified service personnel.

DAMAGE REQUIRING SERVICE — Unplug this product from the wall outlet and refer servicing to qualified service personnel under the following conditions:

- When the power-supply cord or plug is damaged.
- If liquid has been spilled, or objects have fallen into the product.
- If the product has been exposed to rain or water.
- If the product does not operate normally by following the operating instructions. Adjust only those controls that are covered by the operating instructions as an improper adjustment of other controls may result in damage and will often require extensive work by a qualified technician to restore the product to its normal operation.
- If the product has been dropped or damaged in any way.
- When the product exhibits a distinct change in performance — this indicates a need for service.

REPLACEMENT PARTS — When replacement parts are required, be sure the service technician has used replacement parts specified by the manufacturer or have the same characteristics as the original part. Unauthorized substitutions may result in fire, electric shock, or other hazards.

SAFETY CHECK — Upon completion of any service or repairs to this product, ask the service technician to perform safety checks to determine that the product is in proper operating condition.

WALL OR CEILING MOUNTING — The product should not be mounted to a wall or ceiling.

HEAT — The product should be situated away from heat sources such as radiators, heat registers, stoves, or other products (including amplifiers) that produce heat.

English

WARNING: THIS APPARATUS IS NOT WATERPROOF. TO PREVENT FIRE OR SHOCK HAZARD, DO NOT EXPOSE THIS APPARATUS TO RAIN OR MOISTURE AND DO NOT PUT ANY WATER SOURCE NEAR THIS APPARATUS, SUCH AS VASES, FLOWER POTS, COSMETICS CONTAINERS, MEDICINE BOTTLES, ETC.

[For U.S. model]
IMPORTANT NOTICE
The serial number for this equipment is located on the rear case. Please write this serial number on your enclosed warranty card and keep it in a secure area. This is for your security. **H006A_En**

CAUTION: The POWER switch does not completely separates the unit from the MAINS in off position, therefore install the unit suitable places easy to disconnect the MAINS plug in case of the accident.
The MAINS plug of unit should be unplugged from the wall socket when left unused for a long period of time. **H046 En**

WARNING:
Handling the cord on this product or cords associated with accessories sold with the product will expose you to lead, a chemical known to the State of California and other governmental entities to cause cancer and birth defects or other reproductive harm.
Wash hands after handling

NOTE: This equipment has been tested and found to comply with the limits for a Class B digital device, pursuant to Part 15 of the FCC Rules. These limits are designed to provide reasonable protection against harmful interference in a residential installation. This equipment generates, uses, and can radiate radio frequency energy and, if not installed and used in accordance with the instructions, may cause harmful interference to radio communications. However, there is no guarantee that interference will not occur in a particular installation. If this equipment does cause harmful interference to radio or television reception, which can be determined by turning the equipment off and on, the user is encouraged to try to correct the interference by one or more of the following measures:

– Reorient or relocate the receiving antenna.
– Increase the separation between the equipment and receiver.
– Connect the equipment into an outlet on a circuit different from that to which the receiver is connected.
– Consult the dealer or an experienced radio/ TV technician for help. **H010_En**

Information to User
Alteration or modifications carried out without appropriate authorization may invalidate the user's right to operate the equipment. **H011_En**

CAUTION:
This product satisfies FCC regulations when shielded cables and connectors are used to connect the unit to other equipment. To prevent electromagnetic interference with electric appliances such as radios and televisions, use shielded cables and connectors for connections. **H012_En**

WARNING: BEFORE PLUGGING IN THE UNIT FOR THE FIRST TIME, READ THE FOLLOWING SECTION CAREFULLY. THE VOLTAGE OF THE AVAILABLE POWER SUPPLY DIFFERS ACCORDING TO COUNTRY OR REGION. BE SURE THAT THE POWER SUPPLY VOLTAGE OF THE AREA WHERE THIS UNIT WILL BE USED MEETS THE REQUIRED VOLTAGE (E.G., 230V OR 120V) WRITTEN ON THE REAR PANEL.
H041A_En

[For Canadian model]
CAUTION: TO PREVENT ELECTRIC SHOCK, DO NOT USE THIS (POLARIZED) PLUG WITH AN EXTENSION CORD, RECEPTACLE OR OTHER OUTLET UNLESS THE BLADES CAN BE FULLY INSERTED TO PREVENT BLADE EXPOSURE.

ATTENTION: POUR PREVENIR LES CHOCS ELECTRIQUES NE PAS UTILISER CETTE FICHE POLARISEE AVEC UN PROLONGATEUR UNE PRISE DE COURANT OU UNE AUTRE SORTIE DE COURANT, SAUF SI LES LAMES PEUVENT ETRE INSEREES A FOND SANS EN LAISSER AUCUNE PARTIE A DECOUVERT. **H007A_2L**

[For Canadian model]
This Class B digital apparatus complies with Canadian ICES-003.

[Pour le modèle Canadien]
Cet appareil numérique de la classe B est conforme à la norme NMB-003 du Canada.
H009_2L

Operating Environment H045_En

Operating environment temperature and humidity:
+5ºC – +35ºC (+41ºF – +95ºF); less than 85%RH (cooling vents not blocked)
Do not install in the following locations

- Location exposed to direct sunlight or strong artificial light
- Location exposed to high humidity, or poorly ventilated location

WARNING: NO NAKED FLAME SOURCES, SUCH AS LIGHTED CANDLE, SHOULD BE PLACED ON THE APPARATUS. IF NAKED FLAME SOURCES ACCIDENTALLY FALL DOWN, FIRE SPREAD OVER THE APPARATUS THEN MAY CAUSE FIRE.
H044_En

VENTILATION:

When installing this unit, make sure to leave space around the unit for ventilation to improve heat radiation (at least 10 cm at top, 10 cm at rear, and 10 cm at each side).

WARNING: Slot and openings in the cabinet are provided for ventilation and to ensure reliable operation of the product and to protect it from overheating, to prevent fire hazard, the openings should never be blocked and covered with items, such as newspapers, table-cloths, curtains, etc. Also do not put the apparatus on the thick carpet, bed, sofa, or fabric having a thick pile. H040 En

Declaration of Conformity with regard to the R&TTE Directive 1999/5/EC

Manufacturer: **Pioneer Corporation**
4-1, 1-chome, Meguro, Meguro-ku
153-8654 TOKYO, JAPAN

EU Representative's: **Pioneer Europe NV**
Haven 1087, Keetberglaan 1,
9120 MELSELE, BELGIUM

English	Hereby, Pioneer, declares that this Digital Wireless Speaker System XW-DV515 is in compliance with the essential requirements and other relevant provisions of Directive 1999/5/EC.
Suomi	Pioneer vakuuttaa täten että Digital Wireless Speaker System XW-DV515 tyyppinen laite on direktiivin 1999/5/EY oleellisten vaatimusten ja sitä koskevien direktiivin muiden ehtojen mukainen.
Nederlands	Hierbij verklaart Pioneer dat het toestel Digital Wireless Speaker System XW-DV515 in overeenstemming is met de essentiële eisen en de andere relevante bepalingen van richtlijn 1999/5/EG.
Français	Par la présente Pioneer déclare que l'appareil Digital Wireless Speaker System XW-DV515 est conforme aux exigences essentielles et aux autres dispositions pertinentes de la directive 1999/5/CE.
Svenska	Härmed intygar Pioneer att denna Digital Wireless Speaker System XW-DV515 står I överensstämmelse med de väsentliga egenskapskrav och övriga relevanta bestämmelser som framgår av direktiv 1999/5/EG.
Dansk	Undertegnede Pioneer erklærer herved, at følgende udstyr Digital Wireless Speaker System XW-DV515 overholder de væsentlige krav og øvrige relevante krav i direktiv 1999/5/EF.
Deutsch	Hiermit erklärt Pioneer, dass sich dieses Digital Wireless Speaker System XW-DV515 in Übereinstimmung mit den grundlegenden Anforderungen und den anderen relevanten Vorschriften der Richtlinie 1999/5/EG befindet". (BMWi)
Ellinika	ΜΕ ΤΗΝ ΠΑΡΟΥΣΑ Pioneer ΔΗΛΩΝΕΙ ΟΤΙ Digital Wireless Speaker System XW-DV515 ΣΥΜΜΟΡΦΩΝΕΤΑΙ ΠΡΟΣ ΤΙΣ ΟΥΣΙΩΔΕΙΣ ΑΠΑΙΤΗΣΕΙΣ ΚΑΙ ΤΙΣ ΛΟΙΠΕΣ ΣΧΕΤΙΚΕΣ ΔΙΑΤΑΞΕΙΣ ΤΗΣ ΟΔΗΓΙΑΣ 1999/5/ΕΚ.
Italiano	Con la presente Pioneer dichiara che questo Digital Wireless Speaker System XW-DV515 è conforme ai requisiti essenziali ed alle altre disposizioni pertinenti stabilite dalla direttiva 1999/5/CE.
Español	Por medio de la presente Pioneer declara que el Digital Wireless Speaker System XW-DV515 cumple con los requisitos esenciales y cualesquiera otras disposiciones aplicables o exigibles de la Directiva 1999/5/CE.
Português	Pioneer declara que este Digital Wireless Speaker System XW-DV515 está conforme com os requisitos essenciais e outras disposições da Directiva 1999/5/CE.

Replacement and mounting of an AC plug on the power supply cord of this unit should be performed only by qualified service personnel.

IMPORTANT

FOR USE IN THE UNITED KINGDOM

The wires in this mains lead are coloured in accordance with the following code :

Blue : Neutral
Brown : Live

If the plug provided is unsuitable for your socket outlets, the plug must be cut off and a suitable plug fitted.

The cut-off plug should be disposed of and must not be inserted into any 13 amp socket as this can result in electric shock. The plug or adaptor or the distribution panel should be provided with 5 A fuse. As the colours of the wires in the mains lead of this appliance may not correspond with coloured markings identifying the terminals in your plug, proceed as follows ;
The wire which is coloured blue must be connected to the terminal which is marked with the letter N or coloured black.
The wire which is coloured brown must be connected to the terminal which is marked with the letter L or coloured red.

Do not connect either wire to the earth terminal of a three pin plug.

NOTE
After replacing or changing a fuse, the fuse cover in the plug must be replaced with a fuse cover which corresponds to the colour of the insert in the base of the plug or the word that is embossed on the base of the plug, and the appliance must not be used without a fuse cover. If lost replacement fuse covers can be obtained from: your dealer.
Only 5 A fuses approved by B.S.I. or A.S.T.A to B.S. 1362 should be used. **H005BEn**

[For U.S. model]

Changes or modifications not expressly approved by the manufacturer (party responsible) for Compliance could not void the user's authority to operate the equipment.

[For Canadian model]

Operation is subject to the following two conditions: (1) this device may not cause interference, and (2) this device must accept any interference, including interference that may cause undesired operation of the device.

[Pour le modèle Canadien]

L'utilisation de l'appareil est soumise aux deux conditions suivantes: (1) il ne provoque pas de brouillage, et (2) il peut supporter tous les brouillages, y compris ceux qui sont en mesure de provoquer une anomalie de fonctionnement de l'appareil.

[For Canadian model]

To prevent radio interference to the licensed service, this device is intended to be operated indoors and away from windows to provide maximum shielding. Equipment (or its transmit antenna) that is installed outdoors is subject to licensing.

[Pour le modèle Canadien]

Pour éviter le brouillage radioélectrique des émetteurs ayant une licence, cet appareil doit être utilisé à l'intérieur des habitations et loin des fenêtres de manière à assurer la protection maximale. Un équipement (ou son antenne d'émission) lorsqu'il est installé à l'extérieur ne peut être utilisé qu'après obtention d'une licence.

Power cord caution

Handle the power cord by the plug part. Do not pull out the plug by tugging the cord, and never touch the power cord when your hands are wet, as this could cause a short circuit or electric shock. Do not place the unit, a piece of furniture, or other object on the power cord or pinch the cord in any other way. Never make a knot in the cord or tie it with other cords. The power cord should be routed so that they are not likely to be stepped on. A damaged power cord can cause a fire or give you an electric shock. Check the power cord once in a while. If you find it damaged, ask your nearest Pioneer authorized service center or your dealer for a replacement.

Radio wave reflections

The radio waves received by the receiver include the wave coming directly from the transmitter (direct wave) and waves coming from various directions due to reflections by walls, furniture and building (reflected waves). The reflected waves due to obstacles and reflecting objects further produce a variety of reflected waves as well as variation in reception condition depending on locations. If the audio cannot be received properly due to this phenomenon, try moving the location of the wireless speaker a little. Also note that audio may be interrupted due to the reflected waves when a person crosses or approaches the space between the transmitter and wireless speaker.

Important

We do not assume any liability for the damages incurred due to improper use of the product by the user or third party, malfunction during use, other troubles or use of the product, unless indemnity for damages is admitted by the law.

For safety in operation

Do not use the system in the proximity of electronic equipment that requires high-accuracy control or handling of very low-level signals.

- The system may affect the electronic equipment, causing malfunction or accident. Examples of such electronic equipment:
  Hearing aid, cardiac pacemaker, other electrical medical equipment, fire alarm, automatic door, and other automated control equipment.
  If you use a pacemaker or other electrical medical equipment, consult the manufacturer or dealer to check the effects of radio waves on it.

Do not use the system in places where its use is prohibited, for example near aircraft equipment and in hospitals.

- The system may affect electronic equipment or electrical medical equipment, causing an accident. Follow the instructions given by the aircraft company or medical institution.

Contents

01 Connecting Up
Rear panel 8
Rear panel connections 9

02 Controls and Displays
Transmitter 10
Wireless speaker 10

03 Additional Information
Taking care of the unit 13
Troubleshooting. 15
Specifications 16

What's in the box

Please confirm that the following accessories are in the box when you open it.

- Transmitter
- Wireless speaker
- AC adapter
- RCA stereo cord
- These operating instructions
- Warranty card

English

WSS.book Page 8 Friday, March 7, 2003 5:57 PM

Chapter 1
Connecting Up

Rear panel

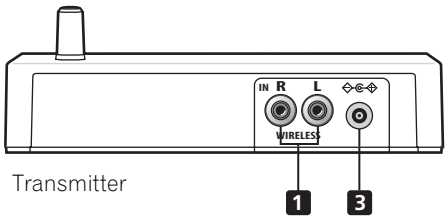

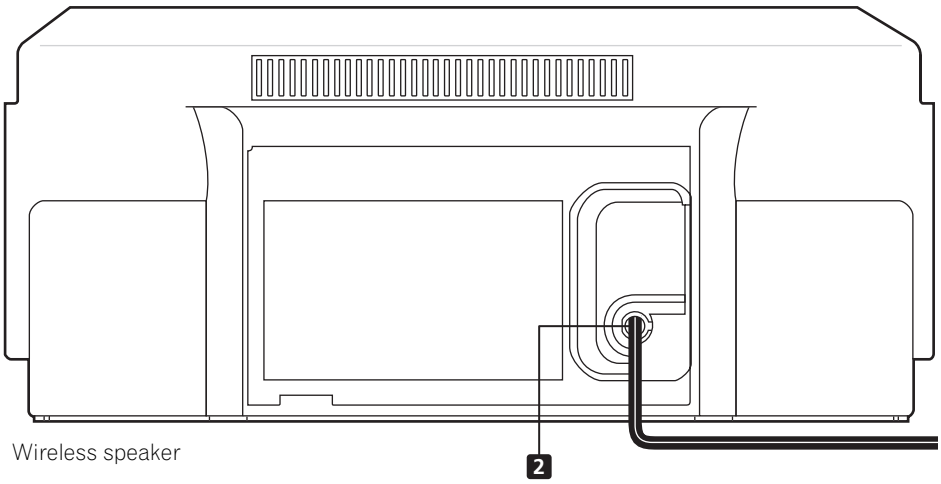

1 **WIRELESS IN L/R jacks**
2 **AC power cable**
3 **DC IN inlet**

Rear panel connections

Important

- When connecting, make sure that all components are switched off and unplugged.

1 WIRELESS IN L/R jacks
Connect the WIRELESS IN L/R jacks to the WIRELESS OUT L/R jacks on your XV-DV515 or XV-HTD630, using the supplied RCA stereo cord. Refer to the supplied operating instructions for details.

2 AC power cable
Plug the AC power cable into a power outlet.

3 DC IN inlet
Connect the supplied AC adapter to the DC IN inlet on the rear panel of the unit, then plug into a power outlet.

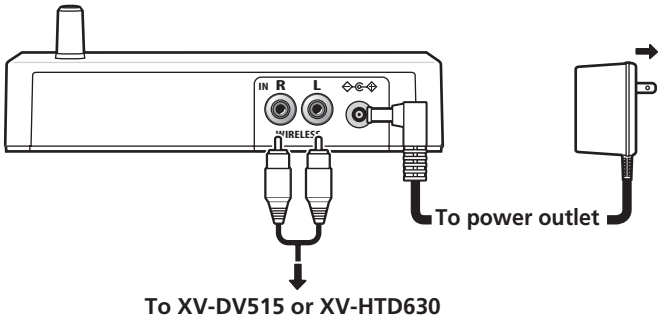

Chapter 2

Controls and Displays

Transmitter

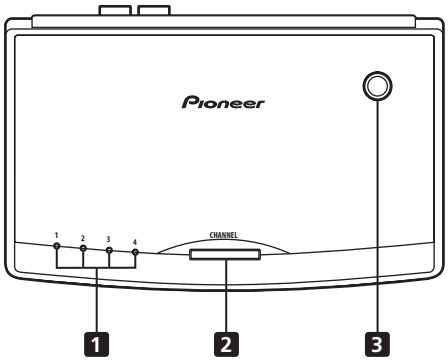

Wireless speaker

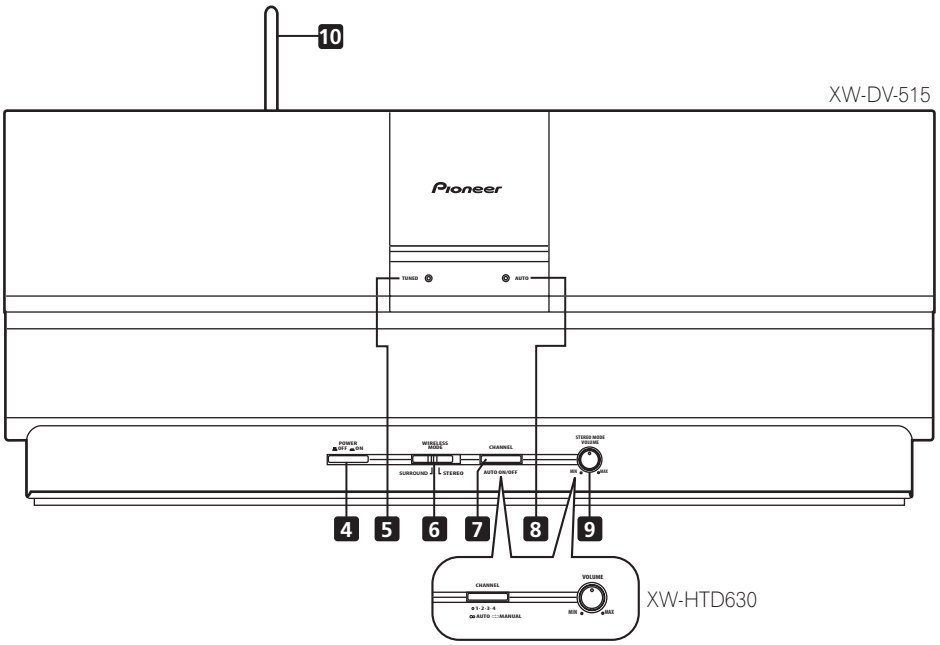

1 CHANNEL INDICATORS
Light to indicate the selected channel.

2 CHANNEL
The default setting is **CH1**. In case of poor reception due to interference from other electrical devices, you can improve reception by selecting another channel. Each time you press the button, the channel changes sequentially:

CH 1 → CH 2 → CH 3 → CH 4

Each of the 4 channels is allocated a frequency as follows:

- **CHANNEL 1** - 2.414GHz
- **CHANNEL 2** - 2.432GHz
- **CHANNEL 3** - 2.450GHz
- **CHANNEL 4** - 2.468GHz

Note

- Poor reception may cause the audio to be interrupted or stopped. This is not malfunction. Try changing the location or orientation of the transmitter and/or the wireless speaker to improve reception.

3 Antenna
Transmits signals to the wireless speaker.

4 POWER
Press to switch the unit on or off.

5 TUNED
Lights when the signal from the transmitter is properly received.

6 WIRELESS MODE
Slide to select either **SURROUND** or **STEREO** mode.

SURROUND - Sounds going to the surround left and right channels are heard through the wireless speakers.

STEREO - Any source playing through the main system is heard in stereo through the wireless speakers (multi-channel sources will be downmixed to stereo).

- Before switching to either mode, stop the DVD receiver.
- If the DVD receiver and wireless speaker modes do not match, the wireless speaker system may produce loud sound.
- When set to **SURROUND**, the **STEREO MODE VOLUME** control does not function.

7 CHANNEL button

- **XW-DV515**

The default setting is **AUTO ON**. Press and hold for more than 5 seconds to switch between **AUTO ON** and **AUTO OFF**.
The reception channel is temporarily locked when set to **AUTO OFF**. Switching to **AUTO OFF** may improve reception in some cases. When the **POWER** is turned off, the **CHANNEL** setting reverts to **AUTO ON**. Normally, use the **AUTO ON** setting.

Note

- When **AUTO ON** is selected, the same channel as the transmitter is selected automatically.

- **XW-HTD630**

The default setting is **AUTO**. Press and hold for more than 5 seconds to switch between **AUTO** and **MANUAL**.

The reception channel is temporarily locked when set to **MANUAL**. Switching to **MANUAL** may improve reception in some cases. The **CHANNEL** changes as follows each time you press the **CHANNEL (AUTO/MANUAL)** button:

→ **CH 1** → **CH 2** → **CH 3** → **CH 4** →

Press **CHANNEL (AUTO/MANUAL)** repeatedly until the same channel as the transmitter is selected.

When the **POWER** is turned off, the **CHANNEL** setting reverts to **AUTO**. Normally, use the **AUTO** setting.

Note

- When **AUTO** is selected, the same channel as the transmitter is selected automatically.
- When **MANUAL** is selected, be sure to select the same channel as the transmitter. If a different channel is selected, the signal can not be received.

8 AUTO

Lights when **AUTO** (**AUTO ON**) mode is selected.

9 VOLUME (STEREO MODE VOLUME)

Turn to adjust the speaker volume when **WIRELESS MODE** is set to **STEREO**.

- When set to **SURROUND**, the volume control does not operate. The volume changes automatically.

10 Antenna

Receives signals from the transmitter.

Note

- The wireless speaker can be used at distances of up to 10m from the transmitter. This range may change depending on the environment.

Tip

- Please refer to the provided manual before using XV-DV515 or XV-HTD630.

Chapter 3

Additional Information

Taking care of the unit

Cleaning the unit's exterior

- Use a polishing cloth or dry cloth to wipe off dust and dirt. If the surfaces are very dirty, wipe with a soft cloth dipped in some neutral cleanser diluted five or six times with water and wrung out well, then wipe again with a dry cloth.
- Do not use furniture wax or cleaners. Never use thinners, benzine or insecticide sprays or other chemicals on or near this unit since they will corrode the surfaces.
- If you use a chemical-impregnated cleaning cloth, read the instructions carefully before use. These cloths may leave smear marks on half-mirror finish surfaces; if this happens, finish with a dry cloth.
- Unplug the unit when cleaning.

Problems with condensation

Condensation may form inside the unit if it is brought into a warm room from outside, or if the temperature of the room rises quickly. Although the condensation won't damage the unit, it may temporarily impair its performance. For this reason you should leave it to adjust to the warmer temperature for about an hour before switching on and using.

Hints on installation

We want you to enjoy using this unit for years to come, so please bear in mind the following points when choosing a suitable location for it:

Do...

- Use in a well-ventilated room.
- Place on a solid, flat, level surface, such as a table, shelf or stereo rack.
- Be sure to switch the wireless speaker off when not in use.

Don't...

- Use in a place exposed to high temperatures or humidity, including near radiators and other heat-generating appliances.
- Place on a window sill or other place where the unit will be exposed to direct sunlight.
- Use in an excessively dusty or damp environment.
- Place directly on top of an amplifier, or other component in your stereo system that becomes hot in use.
- Use near a television or monitor as you may experience interference—especially if the television uses an indoor antenna.
- Use in a kitchen or other room where the unit may be exposed to smoke or steam.
- Use on a thick rug or carpet, or cover with cloth—this may prevent proper cooling of the unit.
- Place on an unstable surface, or one that is not large enough to support all four of the unit's feet.

Moving the wireless speaker

If you need to move the wireless speaker, first press **POWER** on the front panel to turn the unit off. Unplug the power cord.

AC adapter and power cord caution

- Do not leave the power cord near heating equipment. The coating of the cord may melt, which could lead to fire and/or electrocution.
- Make sure to grasp the body of the AC adapter when removing it from the power outlet. If you pull the power cord, it may become damaged which could lead to fire and/or electrocution.
- Do not attempt to plug in or remove the AC adapter with wet hands. This may result in electrocution.

- Insert the prongs of the AC adapter all the way into the power outlet. If the connection is incomplete, heat may be generated which could lead to fire. Furthermore, contact with the connected prongs of the adapter may result in electrocution.
- Do not insert the AC adapter into a power outlet where the connection remains loose despite inserting the prongs all the way into the outlet. Heat may be generated which could lead to fire. Consult with the retailer or an electrician regarding replacement of the power outlet.

Radio wave caution

To prevent noise or interrupted communication, do not use this system in the following locations:

- Locations exposed to the magnetic field, static electricity or radio wave interference from radio communication equipment using the same frequency band (2.4 GHz) as this system, such as a Bluetooth device, radio LAN device or microwave oven. (The radio wave may not reach in certain environments.)
- Locations near a radio. (This may cause noise interference.)
- If the transmitter is used near A/V equipment with an antenna input terminal, such as a TV, VCR, BS tuner or CS tuner, you may experience noise interference on a TV near the transmitter. In such cases, place the transmitter at a larger distance from the antenna input terminal of the A/V equipment.

Scope of operation

Use of this equipment is limited to home use. (Transmission distances may be reduced depending on communication environments.)

In the following locations, poor condition or inability to receive radio waves may cause the audio to be interrupted or stopped:

- In reinforced concrete buildings or homes made of metallic structural members.
- Near large metallic furniture.
- In a crowd of people or near a building or obstacle.
- In a location exposed to the magnetic field, static electricity or radio wave interference from radio communication equipment using the same frequency band (2.4 GHz) as this system, such as a Bluetooth device, radio LAN device or microwave oven.
- If you live in a heavily populated residential area (apartment, townhouse, etc.) and if your neighbor's microwave is placed near your system, you may experience radio wave interference or no sound from the speaker. If this occurs, move your unit to a different place. When the microwave is not in use, there will be no radio wave interference.

Troubleshooting

Incorrect operations are often mistaken for trouble and malfunctions. If you think that there is something wrong with this component, check the points below. If the trouble cannot be rectified even after exercising the checks listed below, ask your nearest PIONEER authorized service center or your dealer to carry out repair work.

Symptom	Cause & Remedy
Audio is interrupted.	• This system uses high frequency radio waves that have properties similar to light, such as linearity, reflection, refraction, diffraction, and interference. Therefore, placement of the system can result in weak radio waves and/or interruption. • The distance between the transmitter and wireless speaker may be too large. Use the wireless speaker within the reach of radio wave from the transmitter. • Is the system being used in a location with favorable condition for electrical noise generation?
Audio is suddenly interrupted.	• There may be radio communication equipment using the same frequency band (2.4 GHz) as this system, such as a Bluetooth device, radio LAN device or microwave oven, operating nearby.
Audio cannot be received.	• The radio wave reception is variable depending on locations due to the effects of obstacles and reflecting objects. Try changing the location of the receiver a little. • The transmitter and receiver are designed and sold as a pair, and they identify each other in communication. This means that communication is not available between separately purchased transmitter and receiver.
Horizontal stripe noise interference on a TV set near the transmitter.	• Is there a piece of A/V equipment with an antenna near the transmitter? If so, move the transmitter away from the antenna input terminal of the AV equipment.
Power shuts off when the switch is on or the system is in operation.	• The system is malfunctioning. Please contact the nearest PIONEER authorized service center.

Caution

Static electricity or other external influence may cause malfunctioning of this unit. In this case, unplugging the power cord and then re-plugging it in will usually reset the unit for proper operation. If this does not correct the problem, please consult your nearest PIONEER service center.

Specifications

General

Digital Wireless Speaker System
(Transmitter/Wireless speaker)

Transmitter

AC adapter
Power requirements
. . AC 220-240V, 50/60Hz (European model)
AC 230V, 50/60Hz (U.K. model)
AC 120V, 60Hz (US model)
Power consumption
. . . . . 9W (European, U.K. model)
8W (US model)
Rated output 12V/300mA
Power consumption (without AC adapter)
. . . . . .2W
Input. . . . . .RCA jack
Weight 0.3kg
Dimensions. . . . . 166(W) x 56(H) x 112(D)mm

Wireless Speaker

Power requirements
. . . . AC 220-230V, 50/60Hz (European model)
AC 230V, 50/60Hz (U.K. model)
AC 120V, 60Hz (US model)
Power consumption
. . . . . 52W (European, U.K. model)
57W (US model)
Amplifier characteristics
Maximum power output 25W/ch
RMS (1kHz, THD10%, 4Ω)
Speaker unit . . . . . 7cm cone type x 2
Weight 4.2kg
Dimensions. . . . 420(W) x 178(H) x 138(D)mm

Accessories

Transmitter. 1
Wireless speaker 1
AC adapter 1
RCA stereo cord. 1
These operating Instructions 1
Warranty card 1

Important

- The specifications and design of this product are subject to change without notice, due to improvement.

Published by Pioneer Corporation.
Copyright © 2003 Pioneer Corporation.
All rights reserved.

Dear Customer:

Selecting fine audio equipment such as the unit you've just purchased is only the start of your musical enjoyment. Now it's time to consider how you can maximize the fun and excitement your equipment offers. This manufacturer and the Electronic Industries Association's Consumer Electronics Group want you to get the most out of your equipment by playing it at a safe level. One that lets the sound come through loud and clear without annoying blaring or distortion-and, most importantly, without affecting your sensitive hearing.

Sound can be deceiving. Over time your hearing "comfort level" adapts to higher volumes of sound. So what sounds "normal" can actually be loud and harmful to your hearing. Guard against this by setting your equipment at a safe level BEFORE your hearing adapts.

To establish a safe level:

- Start your volume control at a low setting.
- Slowly increase the sound until you can hear it comfortably and clearly, and without distortion.

Once you have established a comfortable sound level:

- Set the dial and leave it there.

Taking a minute to do this now will help to prevent hearing damage or loss in the future. After all, we want you listening for a lifetime.

We Want You Listening For A Lifetime

Used wisely, your new sound equipment will provide a lifetime of fun and enjoyment. Since hearing damage from loud noise is often undetectable until it is too late, this manufacturer and the Electronic Industries Association's Consumer Electronics Group recommend you avoid prolonged exposure to excessive noise. This list of sound levels is included for your protection.

Decibel Level	Example
30	Quiet library, soft whispers
40	Living room, refrigerator, bedroom away from traffic
50	Light traffic, normal conversation, quiet office
60	Air conditioner at 20 feet, sewing machine
70	Vacuum cleaner, hair dryer, noisy restaurant
80	Average city traffic, garbage disposals, alarm clock at two feet.
THE FOLLOWING NOISES CAN BE DANGEROUS UNDER CONSTANT EXPOSURE	
90	Subway, motorcycle, truck traffic, lawn mower
100	Garbage truck, chain saw, pneumatic drill
120	Rock band concert in front of speakers, thunderclap
140	Gunshot blast, jet plane
180	Rocket launching pad

Information courtesy of the Deafness Research Foundation.

S001A_en

AFTER-SALES SERVICE FOR PIONEER PRODUCTS

Please contact the dealer or distributor from where you purchased the product for its after-sales service (including warranty conditions) or any other information. In case the necessary information is not available, please contact the Pioneer's subsidiaries (regional service headquarters) listed below:

PLEASE DO NOT SHIP YOUR PRODUCT TO THE COMPANIES at the addresses listed below for repair without advance contact, for these companies are not repair locations.

AMERICA
PIONEER ELECTRONICS (USA) INC.
CUSTOMER SUPPORT DIVISION
P.O. BOX 1760, LONG BEACH, CA 90801-1760, U.S.A.
CUSTOMER SERVICE HOTLINE : (800) 421-1404

EUROPE
PIONEER EUROPE NV
EUROPEAN SERVICE DIVISION
HAVEN 1087, KEETBERGLAAN 1, B-9120 MELSELE, BELGIUM

ASEAN
PIONEER ELECTRONICS ASIACENTRE PTE. LTD.
SERVICE DEPARTMENT
253, ALEXANDRA ROAD #04-01 SINGAPORE 159936

JAPAN AND OTHERS
PIONEER CORPORATION (HEAD OFFICE)
CUSTOMER SUPPORT CENTER
4-1, MEGURO 1-CHOME, MEGURO-KU, TOKYO 153-8654 JAPAN

S016D_en

PIONEER CORPORATION
4-1, Meguro 1-Chome, Meguro-ku, Tokyo 153-8654, Japan
PIONEER ELECTRONICS (USA) INC.
P.O. BOX 1540, Long Beach, California 90810-1540, U.S.A. TEL: (800) 421-1404
PIONEER ELECTRONICS OF CANADA, INC.
300 Allstate Parkway, Markham, Ontario L3R OP2, Canada TEL: (905) 479-4411
PIONEER EUROPE NV
Haven 1087, Keetberglaan 1, B-9120 Melsele, Belgium TEL: 03/570.05.11
PIONEER ELECTRONICS ASIACENTRE PTE. LTD.
253 Alexandra Road, #04-01, Singapore 159936 TEL: 656-472-1111
PIONEER ELECTRONICS AUSTRALIA PTY. LTD.
178-184 Boundary Road, Braeside, Victoria 3195, Australia, TEL: (03) 9586-6300
PIONEER ELECTRONICS DE MEXICO S.A. DE C.V.
Blvd.Manuel Avila Camacho 138 10 piso Col.Lomas de Chapultepec, Mexico,D.F. 11000 TEL: 55-9178-4270

K002E

<TEWWW/03C00001> Printed in / Imprimé au <ARC7475-A>