TEST REPORT

Application No.:	GZCR2507001065AT
Applicant:	Geosolution i Goteborg AB
Address of Applicant:	Stora Avagen 21, 436 34 ASKIM, Sweden
Manufacturer:	Geosolution i Goteborg AB
Address of Manufacturer:	Stora Avagen 21, 436 34 ASKIM, Sweden
Factory:	Geosolution i Goteborg AB
Address of Factory:	Stora Avagen 21, 436 34 ASKIM, Sweden
Product Name:	Wi-Fi & Bluetooth Module
Model No.:	FCS866R
Trade Mark:	SATLAB GEOSOLUTIONS
Standard(s) :	47 CFR Part 15, Subpart E 15.407 (h) (2)
Date of Receipt:	2025-07-15
Date of Test:	2025-07-16 to 2025-08-15
Date of Issue:	2025-08-27
Test Result:	**Pass***

* In the configuration tested, the EUT complied with the standards specified above.

通标标准技术服务有限公司广州分公司
检验检测专用章
Inspection & Testing Services
SGS-CSTC Standards Technical Services Co., Ltd. Guangzhou Branch

Unless otherwise agreed in writing, this document is issued by the Company subject to its General Conditions of Service printed overleaf, available on request or accessible at https://www.sgs.com/en/Terms-and-Conditions. Attention is drawn to the limitation of liability, indemnification and jurisdiction issues defined therein. Any holder of this document is advised that information contained hereon reflects the Company's findings at the time of its intervention only and within the limits of Client's instructions, if any. The Company's sole responsibility is to its Client and this document does not exonerate parties to a transaction from exercising all their rights and obligations under the transaction documents. This document cannot be reproduced except in full, without prior written approval of the Company. Any unauthorized alteration, forgery or falsification of the content or appearance of this document is unlawful and offenders may be prosecuted to the fullest extent of the law. Unless otherwise stated the results shown in this test report refer only to the sample(s) tested and such sample(s) are retained for 30 days only.
Attention: To check the authenticity of testing /inspection report & certificate, please contact us at telephone: (86-755) 8307 1443, or email: CN.Doccheck@sgs.com

Revision Record			
Version	**Report No.**	**Date**	**Remark**
01	GZCR250700106506	2025-08-15	Original

Authorized for issue by:				
Tested By		Key Liang **Key Liang/Project Engineer**		
Approved By		Vico Cui **Vico Cui/Reviewer**		

Unless otherwise agreed in writing, this document is issued by the Company subject to its General Conditions of Service printed overleaf, available on request or accessible at https://www.sgs.com/en/Terms-and-Conditions. Attention is drawn to the limitation of liability, indemnification and jurisdiction issues defined therein. Any holder of this document is advised that information contained hereon reflects the Company's findings at the time of its intervention only and within the limits of Client's instructions, if any. The Company's sole responsibility is to its Client and this document does not exonerate parties to a transaction from exercising all their rights and obligations under the transaction documents. This document cannot be reproduced except in full, without prior written approval of the Company. Any unauthorized alteration, forgery or falsification of the content or appearance of this document is unlawful and offenders may be prosecuted to the fullest extent of the law. Unless otherwise stated the results shown in this test report refer only to the sample(s) tested and such sample(s) are retained for 30 days only.
Attention: To check the authenticity of testing /inspection report & certificate, please contact us at telephone: (86-755) 8307 1443, or email: CN.Doccheck@sgs.com
SGS-CSTC Standards Technical Services Co., Ltd. Guangzhou Branch EMC Laboratory
No.198, Kezhu Road, Science City, Economic & Technological Development Area, Guangzhou, Guangdong, China 510663 t (86-20) 82155555 www.sgsgroup.com.cn
中国・广东・广州高新技术产业开发区科学城科珠路198号 邮编：510663 t (86-20) 82155555 sgs.china@sgs.com
Member of the SGS Group (SGS SA)

2 Test Summary

Radio Spectrum Matter Part				
Item	**Standard**	**Method**	**Requirement**	**Result**
Non-occupancy period	47 CFR Part 15, Subpart E 15.407	KDB 905462 D02 Section 7.8.3	KDB 905462 D02 Section 5.1	Pass
Channel Move Time		KDB 905462 D02 Section 7.8.3	KDB 905462 D02 Section 5.1	Pass
Channel Closing Transmission Time		KDB 905462 D02 Section 7.8.3	KDB 905462 D02 Section 5.1	Pass

Note:

E.U.T./EUT means Equipment Under Test.

Pass means the test result passed the test standard requirement, please find the detailed decision rule in the report relative section.

Remark:

This report is based on original modular (FCC ID: AJY2023FCS866R) C2PC change the modular antenna.

With following changes:

1.Replacing new Integral Antenna with different gain than the antenna previously authorized under the certification FCC ID: AJY2023FCS866R.

For verify the Antenna Requirement, DFS was performed with new antenna.

Therefore, the new test data was kept in this report GZCR250700106505. For original data please refer to FCC ID: AJY2023FCS866R for more details.

Unless otherwise agreed in writing, this document is issued by the Company subject to its General Conditions of Service printed overleaf, available on request or accessible at https://www.sgs.com/en/Terms-and-Conditions. Attention is drawn to the limitation of liability, indemnification and jurisdiction issues defined therein. Any holder of this document is advised that information contained hereon reflects the Company's findings at the time of its intervention only and within the limits of Client's instructions, if any. The Company's sole responsibility is to its Client and this document does not exonerate parties to a transaction from exercising all their rights and obligations under the transaction documents. This document cannot be reproduced except in full, without prior written approval of the Company. Any unauthorized alteration, forgery or falsification of the content or appearance of this document is unlawful and offenders may be prosecuted to the fullest extent of the law. Unless otherwise stated the results shown in this test report refer only to the sample(s) tested and such sample(s) are retained for 30 days only.
Attention: To check the authenticity of testing /inspection report & certificate, please contact us at telephone: (86-755) 8307 1443, or email: CN.Doccheck@sgs.com
No.198, Kezhu Road, Science City, Economic & Technological Development Area, Guangzhou, Guangdong, China 510663 t (86-20) 82155555 www.sgsgroup.com.cn
中国・广东・广州高新技术产业开发区科学城科珠路198号 邮编：510663 t (86-20) 82155555 sgs.china@sgs.com
Member of the SGS Group (SGS SA)

3 Contents

Page

1 Cover Page 1

2 Test Summary 3

3 Contents 4

4 General Information 5

4.1 Details of E.U.T. 5
4.2 Description of Support Units 5
4.3 Measurement Uncertainty 6
4.4 Test Location 6
4.5 Test Facility 7
4.6 Deviation from Standards 7
4.7 Abnormalities from Standard Conditions 7

5 Equipment List 8

6 Radio Spectrum Matter Test Results 9

6.1 Non-occupancy period 9
6.1.1 E.U.T. Operation 9
6.1.2 Test Mode Description 9
6.1.3 Test Setup Diagram 10
6.1.4 Measurement Procedure and Data 11
6.2 Channel Move Time 12
6.2.1 E.U.T. Operation 12
6.2.2 Test Mode Description 12
6.2.3 Test Setup Diagram 13
6.2.4 Measurement Procedure and Data 14
6.3 Channel Closing Transmission Time 15
6.3.1 E.U.T. Operation 15
6.3.2 Test Mode Description 15
6.3.3 Test Setup Diagram 16
6.3.4 Measurement Procedure and Data 17

7 Test Setup Photo 18

8 EUT Constructional Details (EUT Photos) 19

9 Appendix 20

Unless otherwise agreed in writing, this document is issued by the Company subject to its General Conditions of Service printed overleaf, available on request or accessible at https://www.sgs.com/en/Terms-and-Conditions. Attention is drawn to the limitation of liability, indemnification and jurisdiction issues defined therein. Any holder of this document is advised that information contained hereon reflects the Company's findings at the time of its intervention only and within the limits of Client's instructions, if any. The Company's sole responsibility is to its Client and this document does not exonerate parties to a transaction from exercising all their rights and obligations under the transaction documents. This document cannot be reproduced except in full, without prior written approval of the Company. Any unauthorized alteration, forgery or falsification of the content or appearance of this document is unlawful and offenders may be prosecuted to the fullest extent of the law. Unless otherwise stated the results shown in this test report refer only to the sample(s) tested and such sample(s) are retained for 30 days only.
Attention: To check the authenticity of testing /inspection report & certificate, please contact us at telephone: (86-755) 8307 1443, or email: CN.Doccheck@sgs.com

No.198, Kezhu Road, Science City, Economic & Technological Development Area, Guangzhou, Guangdong, China 510663 t (86-20) 82155555 www.sgsgroup.com.cn
中国・广东・广州高新技术产业开发区科学城科珠路198号 邮编：510663 t (86-20) 82155555 sgs.china@sgs.com

4 General Information

4.1 Details of E.U.T.

Power supply:	DC 3.3V
Test voltage:	AC 120V, 60Hz powered by Note Book Computer refer to section 4.2
Cable(s):	N/A
Operation Frequency/Number of channels (20MHz):	U-NII-1: 5180-5240MHz (4 Channels) U-NII-2A: 5260-5320MHz (4 Channels) U-NII-2C: 5500-5700MHz (11 Channels) U-NII-3: 5745-5825MHz (5 Channels)
Operation Frequency/Number of channels/(40MHz):	U-NII-1: 5190-5230MHz (2 Channels) U-NII-2A: 5270-5310MHz (2 Channels) U-NII-2C: 5510-5670MHz (5 Channels) U-NII-3: 5755-5795MHz (2 Channels)
Operation Frequency/Number of channels (80MHz):	U-NII-1: 5210MHz (1 Channel) U-NII-2A: 5290MHz (1 Channels) U-NII-2C: 5530-5610MHz (2 Channels) U-NII-3: 5775MHz (1 Channel)
Modulation Type:	802.11a: OFDM (BPSK, QPSK, 16QAM, 64QAM) 802.11n: OFDM (BPSK, QPSK, 16QAM, 64QAM) 802.11ac: OFDM (BPSK, QPSK, 16QAM, 64QAM, 256QAM) 802.11ax: OFDMA (BPSK, QPSK, 16QAM, 64QAM, 256QAM, 1024-QAM)
Channel Spacing:	802.11a/n/ac/ax 20: 20MHz 802.11n/ac/ax 40: 40MHz 802.11ac/ax 80: 80MHz
DFS Function:	Slave without Radar detection
Antenna Type:	Integral Antenna
Antenna Number:	1
Antenna Gain:	0.5 dBi(Declared by antenna specification)

Remark: The information in this section is provided by the applicant or manufacturer, SGS is not liable to the accuracy, suitability, reliability or/and integrity of the information.

4.2 Description of Support Units

Description	Manufacturer	Model No.	Serial No.
Mobile Phone	SAMSUNG	SM-G9810	RFCN309Q9QF
Note Book Computer	LENOVO	ThinkPad T490	PF1D1MVJ

Unless otherwise agreed in writing, this document is issued by the Company subject to its General Conditions of Service printed overleaf, available on request or accessible at https://www.sgs.com/en/Terms-and-Conditions. Attention is drawn to the limitation of liability, indemnification and jurisdiction issues defined therein. Any holder of this document is advised that information contained hereon reflects the Company's findings at the time of its intervention only and within the limits of Client's instructions, if any. The Company's sole responsibility is to its Client and this document does not exonerate parties to a transaction from exercising all their rights and obligations under the transaction documents. This document cannot be reproduced except in full, without prior written approval of the Company. Any unauthorized alteration, forgery or falsification of the content or appearance of this document is unlawful and offenders may be prosecuted to the fullest extent of the law. Unless otherwise stated the results shown in this test report refer only to the sample(s) tested and such sample(s) are retained for 30 days only.
Attention: To check the authenticity of testing /inspection report & certificate, please contact us at telephone: (86-755) 8307 1443, or email: CN.Doccheck@sgs.com
SGS-CSTC Standards Technical Services Co., Ltd. Guangzhou Branch EEC Laboratory
No.198, Kezhu Road, Science City, Economic & Technological Development Area, Guangzhou, Guangdong, China 510663 t (86-20) 82155555 www.sgsgroup.com.cn
中国・广东・广州高新技术产业开发区科学城科珠路198号 邮编：510663 t (86-20) 82155555 sgs.china@sgs.com
Member of the SGS Group (SGS SA)

4.3 Measurement Uncertainty

Remark:

The U_{lab} (lab Uncertainty) is less than U_{cispr} (CISPR Uncertainty) or U_{ETSI}(ETSI Uncertainty).

Emission decision rule:

– Compliance is deemed to occur if no measured disturbance level exceeds the disturbance limit, marked as Pass in the report.

– Non-compliance is deemed to occur if any measured disturbance level exceeds the disturbance limit, marked as Fail in the report.

4.4 Test Location

All tests were performed at:

SGS-CSTC Standards Technical Services Co., Ltd., Guangzhou Branch EMC Laboratory,

No.198, Kezhu Road, Science City, Economic & Technological Development Area, Guangzhou, Guangdong, China 510663

Tel: +86 20 82155555

No tests were sub-contracted.

Unless otherwise agreed in writing, this document is issued by the Company subject to its General Conditions of Service printed overleaf, available on request or accessible at https://www.sgs.com/en/Terms-and-Conditions. Attention is drawn to the limitation of liability, indemnification and jurisdiction issues defined therein. Any holder of this document is advised that information contained hereon reflects the Company's findings at the time of its intervention only and within the limits of Client's instructions, if any. The Company's sole responsibility is to its Client and this document does not exonerate parties to a transaction from exercising all their rights and obligations under the transaction documents. This document cannot be reproduced except in full, without prior written approval of the Company. Any unauthorized alteration, forgery or falsification of the content or appearance of this document is unlawful and offenders may be prosecuted to the fullest extent of the law. Unless otherwise stated the results shown in this test report refer only to the sample(s) tested and such sample(s) are retained for 30 days only.
Attention: To check the authenticity of testing /inspection report & certificate, please contact us at telephone: (86-755) 8307 1443, or email: CN.Doccheck@sgs.com
检验检测专用章 Inspection & Testing Services
SGS-CSTC Standards Technical Services Co., Ltd. Guangzhou Branch EMC Laboratory
No.198, Kezhu Road, Science City, Economic & Technological Development Area, Guangzhou, Guangdong, China 510663 t (86-20) 82155555 www.sgsgroup.com.cn
中国・广东・广州高新技术产业开发区科学城科珠路198号 邮编：510663 t (86-20) 82155555 sgs.china@sgs.com
Member of the SGS Group (SGS SA)

4.5 Test Facility

The test facility is recognized, certified, or accredited by the following organizations:

- **ACMA**

SGS-CSTC Standards Technical Services Co., Ltd., EMC Laboratory can also perform testing for the Australian/New Zealand Regulatory Compliance Mark (RCM).

- **SGS UK(Certificate No.: 32), SGS-TUV SAARLAND and SGS-FIMKO**

Have approved SGS-CSTC Standards Technical Services Co., Ltd., EMC Laboratory as a supplier of EMC TESTING SERVICES and SAFETY TESTING SERVICES.

- **FCC Recognized Accredited Test Firm(Registration No.: 486818)**

SGS-CSTC Standards Technical Services Co., Ltd., EMC Laboratory has been accredited and fully described in a report filed with the (FCC) Federal Communications Commission. The acceptance letter from the FCC is maintained in our files. Designation Number: CN5016, Test Firm Registration Number: 486818.

- **ISED (Registration No.: 4620B, CAB identifier: CN0052)**

SGS-CSTC Standards Technical Services Co., Ltd., has been registered by Innovation Science and Economic Development Canada for Wireless Device Testing laboratories to test to Canadian radio equipment requirements. Registration No. 4620B, CAB identifier: CN0052.

- **VCCI (Registration No.: R-12460, C-12584, G-20107 and T-11179)**

The 10m Semi-anechoic chamber, 966 Anechoic Chamber and Shielded Room of SGS-CSTC Standards Technical Services Co., Ltd. have been registered in accordance with the Regulations for Voluntary Control Measures with Registration No.: R-12460, C-12584, G-20107 and T-11179 respectively.

- **CBTL (Lab Code: TL129)**

SGS-CSTC Standards Technical Services Co., Ltd., E&E Laboratory has been assessed and fully comply with the requirements of ISO/IEC 17025:2017, the Basic Rules, IECEE 01 and Rules of procedure IECEE 02, and the relevant IECEE CB-Scheme Operational documents.

4.6 Deviation from Standards

None

4.7 Abnormalities from Standard Conditions

None

Unless otherwise agreed in writing, this document is issued by the Company subject to its General Conditions of Service printed overleaf, available on request or accessible at https://www.sgs.com/en/Terms-and-Conditions. Attention is drawn to the limitation of liability, indemnification and jurisdiction issues defined therein. Any holder of this document is advised that information contained hereon reflects the Company's findings at the time of its intervention only and within the limits of Client's instructions, if any. The Company's sole responsibility is to its Client and this document does not exonerate parties to a transaction from exercising all their rights and obligations under the transaction documents. This document cannot be reproduced except in full, without prior written approval of the Company. Any unauthorized alteration, forgery or falsification of the content or appearance of this document is unlawful and offenders may be prosecuted to the fullest extent of the law. Unless otherwise stated the results shown in this test report refer only to the sample(s) tested and such sample(s) are retained for 30 days only.
Attention: To check the authenticity of testing /inspection report & certificate, please contact us at telephone: (86-755) 8307 1443, or email: CN.Doccheck@sgs.com
SGS-CSTC Standards Technical Services Co., Ltd. Guangzhou Branch EMC Laboratory
No.198, Kezhu Road, Science City, Economic & Technological Development Area, Guangzhou, Guangdong, China 510663 t (86-20) 82155555 www.sgsgroup.com.cn
中国・广东・广州高新技术产业开发区科学城科珠路198号 邮编：510663 t (86-20) 82155555 sgs.china@sgs.com
Member of the SGS Group (SGS SA)

5 Equipment List

RF Conducted Test					
Equipment	**Manufacturer**	**Model No.**	**Inventory No.**	**Cal Date**	**Cal Due Date**
MI CABLE	SGS-EMC	0.8M	EMC2137	2023-11-02	2025-11-01
EXA Signal Analyzer (10Hz-44GHz)	Keysight	N9010A	EMC2138	2025-08-18	2026-08-17
MXG Vector Signal Generator	Keysight	N5182B	EMC2216	2024-10-14	2025-10-13
4X4 Power sensor Unit	TST	TSPS2023R	EMC2226	2025-08-18	2026-08-17
Test Software	TST	V2.0	GZE100-78	N/A	N/A

General used equipment					
Equipment	**Manufacturer**	**Model No**	**Inventory No**	**Cal Date**	**Cal Due Date**
DMM	Fluke	73	EMC0006	2025-06-03	2026-06-02

Unless otherwise agreed in writing, this document is issued by the Company subject to its General Conditions of Service printed overleaf, available on request or accessible at https://www.sgs.com/en/Terms-and-Conditions. Attention is drawn to the limitation of liability, indemnification and jurisdiction issues defined therein. Any holder of this document is advised that information contained hereon reflects the Company's findings at the time of its intervention only and within the limits of Client's instructions, if any. The Company's sole responsibility is to its Client and this document does not exonerate parties to a transaction from exercising all their rights and obligations under the transaction documents. This document cannot be reproduced except in full, without prior written approval of the Company. Any unauthorized alteration, forgery or falsification of the content or appearance of this document is unlawful and offenders may be prosecuted to the fullest extent of the law. Unless otherwise stated the results shown in this test report refer only to the sample(s) tested and such sample(s) are retained for 30 days only.
Attention: To check the authenticity of testing /inspection report & certificate, please contact us at telephone: (86-755) 8307 1443, or email: CN.Doccheck@sgs.com
SGS-CSTC Standards Technical Services Co., Ltd. Guangzhou Branch EMC Laboratory
No.198, Kezhu Road, Science City, Economic & Technological Development Area, Guangzhou, Guangdong, China 510663 t (86-20) 82155555 www.sgsgroup.com.cn
中国・广东・广州高新技术产业开发区科学城科珠路198号 邮编：510663 t (86-20) 82155555 sgs.china@sgs.com
Member of the SGS Group (SGS SA)

6 Radio Spectrum Matter Test Results

6.1 Non-occupancy period

Test Requirement KDB 905462 D02 Section 5.1

Test Method: KDB 905462 D02 Section 7.8.3

Limit:

Test item	Limit	Applicability	
		Master Device or client with Radar Detection	Client without Radar Detection
Non-occupancy period	Minimum 30 minutes	Yes	Not required
Channel Availability Check Time	60 seconds	Yes	Not required
Channel Move Time	10 seconds See Note 1.	Yes	Yes
Channel Closing Transmission Time	200 milliseconds + an aggregate of 60 milliseconds over remaining 10 second period. See Notes 1 and 2.	Yes	Yes
U-NII Detection Bandwidth	Minimum 100% of the U-NII 99% transmission power bandwidth. See Note 3.	Yes	Not required

Note 1: Channel Move Time and the Channel Closing Transmission Time should be performed with Radar Type 0. The measurement timing begins at the end of the Radar Type 0 burst.

Note 2: The Channel Closing Transmission Time is comprised of 200 milliseconds starting at the beginning of the Channel Move Time plus any additional intermittent control signals required to facilitate a Channel move (an aggregate of 60 milliseconds) during the remainder of the 10 second period. The aggregate duration of control signals will not count quiet periods in between transmissions.

Note 3: During the U-NII Detection Bandwidth detection test, radar type 0 should be used. For each frequency step the minimum percentage of detection is 90 percent. Measurements are performed with no data traffic.

6.1.1 E.U.T. Operation

Operating Environment:

Temperature: 22.7 °C Humidity: 56.4 % RH Atmospheric Pressure: 1006 mbar

6.1.2 Test Mode Description

Pre-scan / Final test	Mode Code	Description
Final test	08	Normal operating_Keep the EUT communication with the companion device.

Unless otherwise agreed in writing, this document is issued by the Company subject to its General Conditions of Service printed overleaf, available on request or accessible at https://www.sgs.com/en/Terms-and-Conditions. Attention is drawn to the limitation of liability, indemnification and jurisdiction issues defined therein. Any holder of this document is advised that information contained hereon reflects the Company's findings at the time of its intervention only and within the limits of Client's instructions, if any. The Company's sole responsibility is to its Client and this document does not exonerate parties to a transaction from exercising all their rights and obligations under the transaction documents. This document cannot be reproduced except in full, without prior written approval of the Company. Any unauthorized alteration, forgery or falsification of the content or appearance of this document is unlawful and offenders may be prosecuted to the fullest extent of the law. Unless otherwise stated the results shown in this test report refer only to the sample(s) tested and such sample(s) are retained for 30 days only.
Attention: To check the authenticity of testing /inspection report & certificate, please contact us at telephone: (86-755) 8307 1443, or email: CN.Doccheck@sgs.com
No.198, Kezhu Road, Science City, Economic & Technological Development Area, Guangzhou, Guangdong, China 510663 t (86-20) 82155555 www.sgsgroup.com.cn
中国・广东・广州高新技术产业开发区科学城科珠路198号 邮编：510663 t (86-20) 82155555 sgs.china@sgs.com
Member of the SGS Group (SGS SA)

6.1.3 Test Setup Diagram

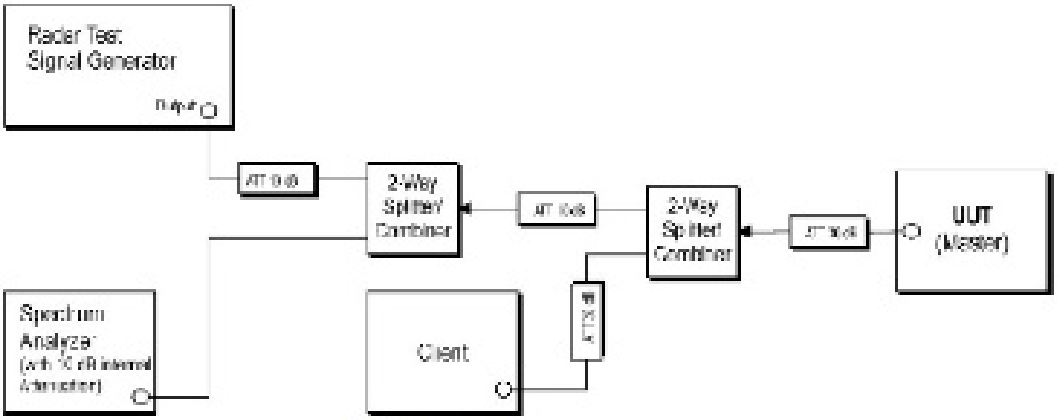

DFS Master

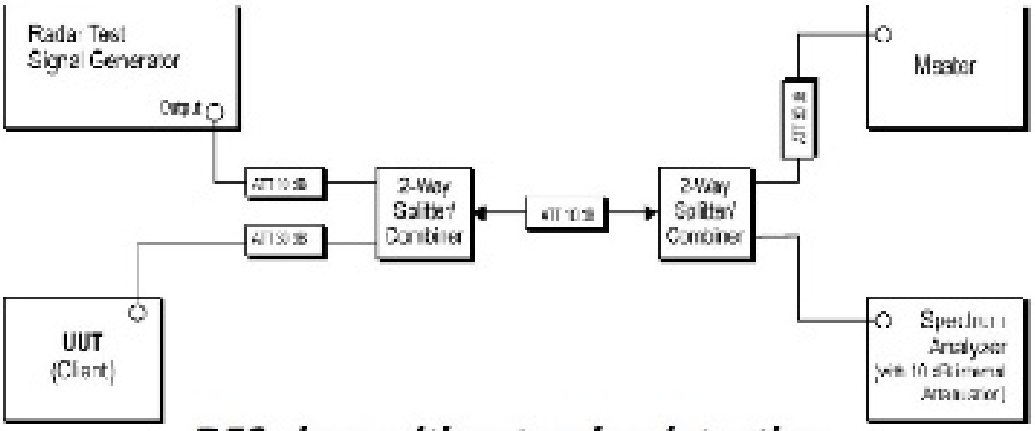

DFS slave without radar detection

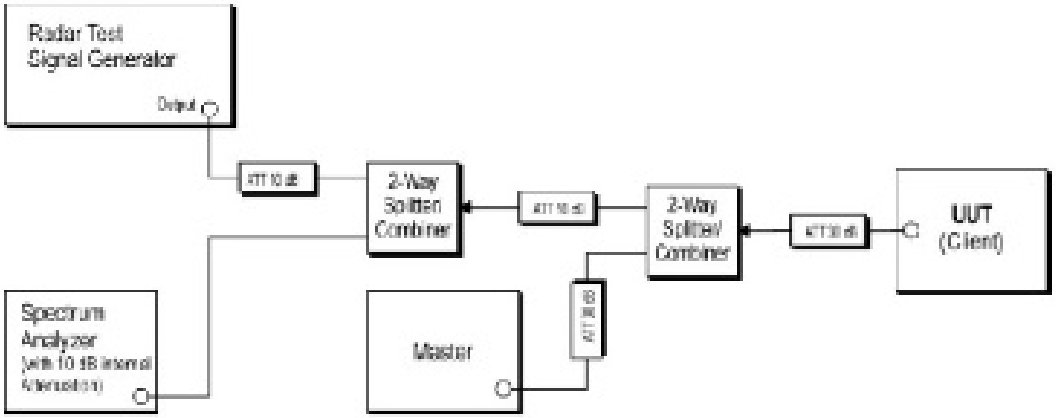

DFS slave with radar detection

Unless otherwise agreed in writing, this document is issued by the Company subject to its General Conditions of Service printed overleaf, available on request or accessible at https://www.sgs.com/en/Terms-and-Conditions. Attention is drawn to the limitation of liability, indemnification and jurisdiction issues defined therein. Any holder of this document is advised that information contained hereon reflects the Company's findings at the time of its intervention only and within the limits of Client's instructions, if any. The Company's sole responsibility is to its Client and this document does not exonerate parties to a transaction from exercising all their rights and obligations under the transaction documents. This document cannot be reproduced except in full, without prior written approval of the Company. Any unauthorized alteration, forgery or falsification of the content or appearance of this document is unlawful and offenders may be prosecuted to the fullest extent of the law. Unless otherwise stated the results shown in this test report refer only to the sample(s) tested and such sample(s) are retained for 30 days only.
Attention: To check the authenticity of testing /inspection report & certificate, please contact us at telephone: (86-755) 8307 1443, or email: CN.Doccheck@sgs.com
SGS-CSTC Standards Technical Services Co., Ltd. Guangzhou Branch EEC Laboratory
No.198, Kezhu Road, Science City, Economic & Technological Development Area, Guangzhou, Guangdong, China 510663 t (86-20) 82155555 www.sgsgroup.com.cn
中国・广东・广州高新技术产业开发区科学城科珠路198号 邮编：510663 t (86-20) 82155555 sgs.china@sgs.com
Member of the SGS Group (SGS SA)

6.1.4 Measurement Procedure and Data

1) The radar pulse generator is setup to provide a pulse at frequency that the master and client are operating. A type 0 radar pulse with a 1us pulse width and a 1428us PRI is used for the testing.
2) The vector signal generator is adjusted to provide the radar burst (18 pulses) at the level of approximately -61dBm at the antenna port of the master device.
3) A trigger is provided from the pulse generator to the DFS monitoring system in order to capture the traffic and the occurrence of the radar pulse.
4) EUT will associate with the master at channel. The file “iperf.exe” specified by the FCC is streamed from the PC 2 through the master and the client device to the PC 1 and played in full motion video using Media Player Classic Ver. 6.4.8.6 in order to properly load the network for the entire period of the test.
5) When radar burst with a level equal to the DFS Detection Threshold +1dB is generated on the operating channel of the U-NII device. At time T0 the radar waveform generator sends a burst of pulse of the radar waveform at Detection Threshold +1dB.
6) Observe the transmissions of the EUT at the end of the radar Burst on the Operating Channel. Measure and record the transmissions from the UUT during the observation time (Channel Move Time). One 15 seconds plot is reported for the Short Pulse Radar Type 0. The plot for the Short Pulse Radar Types start at the end of the radar burst. The Channel Move Time will be calculated based on the zoom in 600ms plot of the Short Pulse Radar Type.
7) Measurement of the aggregate duration of the Channel Closed Transmission Time method. With the spectrum analyzer set to zero span tuned to the center frequency of the EUT operating channel at the radar simulated frequency, peak detection, and max hold, the dwell time per bin is given by: Dwell (0.3ms) =S (12000ms) / B (4000); where Dwell is the dwell time per spectrum analyzer sampling bin, S is sweep time and B is the number of spectrum analyzer sampling bins. An upper bound of the aggregate duration of the intermittent control signals of Channel Closing Transmission Time is calculated by: C (ms)= N X Dwell (0.3ms); where C is the Closing Time, N is the number of spectrum analyzer sampling bins (intermittent control signals) showing a U-NII transmission and Dwell is the dwell time per bin.
8) Measurement the EUT for more than 30 minutes following the channel move time to verify that no transmission or beacons occur on this channel.

Please Refer to Appendix for Details

Unless otherwise agreed in writing, this document is issued by the Company subject to its General Conditions of Service printed overleaf, available on request or accessible at https://www.sgs.com/en/Terms-and-Conditions. Attention is drawn to the limitation of liability, indemnification and jurisdiction issues defined therein. Any holder of this document is advised that information contained hereon reflects the Company's findings at the time of its intervention only and within the limits of Client's instructions, if any. The Company's sole responsibility is to its Client and this document does not exonerate parties to a transaction from exercising all their rights and obligations under the transaction documents. This document cannot be reproduced except in full, without prior written approval of the Company. Any unauthorized alteration, forgery or falsification of the content or appearance of this document is unlawful and offenders may be prosecuted to the fullest extent of the law. Unless otherwise stated the results shown in this test report refer only to the sample(s) tested and such sample(s) are retained for 30 days only.
Attention: To check the authenticity of testing /inspection report & certificate, please contact us at telephone: (86-755) 8307 1443, or email: CN.Doccheck@sgs.com
SGS-CSTC Standards Technical Services Co., Ltd. Guangzhou Branch EMC Laboratory
No.198, Kezhu Road, Science City, Economic & Technological Development Area, Guangzhou, Guangdong, China 510663 t (86-20) 82155555 www.sgsgroup.com.cn
中国・广东・广州高新技术产业开发区科学城科珠路198号 邮编：510663 t (86-20) 82155555 sgs.china@sgs.com
Member of the SGS Group (SGS SA)

6.2 Channel Move Time

Test Requirement KDB 905462 D02 Section 5.1

Test Method: KDB 905462 D02 Section 7.8.3

Limit:

Test item	Limit	Applicability	
		Master Device or client with Radar Detection	Client without Radar Detection
Non-occupancy period	Minimum 30 minutes	Yes	Not required
Channel Availability Check Time	60 seconds	Yes	Not required
Channel Move Time	10 seconds See Note 1.	Yes	Yes
Channel Closing Transmission Time	200 milliseconds + an aggregate of 60 milliseconds over remaining 10 second period. See Notes 1 and 2.	Yes	Yes
U-NII Detection Bandwidth	Minimum 100% of the U-NII 99% transmission power bandwidth. See Note 3.	Yes	Not required

Note 1: Channel Move Time and the Channel Closing Transmission Time should be performed with Radar Type 0. The measurement timing begins at the end of the Radar Type 0 burst.

Note 2: The Channel Closing Transmission Time is comprised of 200 milliseconds starting at the beginning of the Channel Move Time plus any additional intermittent control signals required to facilitate a Channel move (an aggregate of 60 milliseconds) during the remainder of the 10 second period. The aggregate duration of control signals will not count quiet periods in between transmissions.

Note 3: During the U-NII Detection Bandwidth detection test, radar type 0 should be used. For each frequency step the minimum percentage of detection is 90 percent. Measurements are performed with no data traffic.

6.2.1 E.U.T. Operation

Operating Environment:

Temperature: 22.7 °C Humidity: 56.4 % RH Atmospheric Pressure: 1006 mbar

6.2.2 Test Mode Description

Pre-scan / Final test	Mode Code	Description
Final test	08	Normal operating_Keep the EUT communication with the companion device.

Unless otherwise agreed in writing, this document is issued by the Company subject to its General Conditions of Service printed overleaf, available on request or accessible at https://www.sgs.com/en/Terms-and-Conditions. Attention is drawn to the limitation of liability, indemnification and jurisdiction issues defined therein. Any holder of this document is advised that information contained hereon reflects the Company's findings at the time of its intervention only and within the limits of Client's instructions, if any. The Company's sole responsibility is to its Client and this document does not exonerate parties to a transaction from exercising all their rights and obligations under the transaction documents. This document cannot be reproduced except in full, without prior written approval of the Company. Any unauthorized alteration, forgery or falsification of the content or appearance of this document is unlawful and offenders may be prosecuted to the fullest extent of the law. Unless otherwise stated the results shown in this test report refer only to the sample(s) tested and such sample(s) are retained for 30 days only.
Attention: To check the authenticity of testing /inspection report & certificate, please contact us at telephone: (86-755) 8307 1443, or email: CN.Doccheck@sgs.com
No.198, Kezhu Road, Science City, Economic & Technological Development Area, Guangzhou, Guangdong, China 510663 t (86-20) 82155555 www.sgsgroup.com.cn
中国・广东・广州高新技术产业开发区科学城科珠路198号 邮编：510663 t (86-20) 82155555 sgs.china@sgs.com

6.2.3 Test Setup Diagram

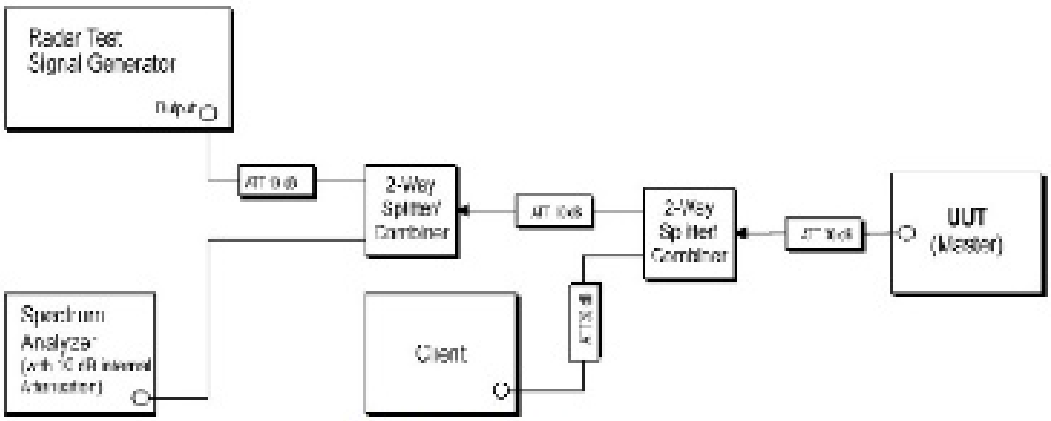

DFS Master

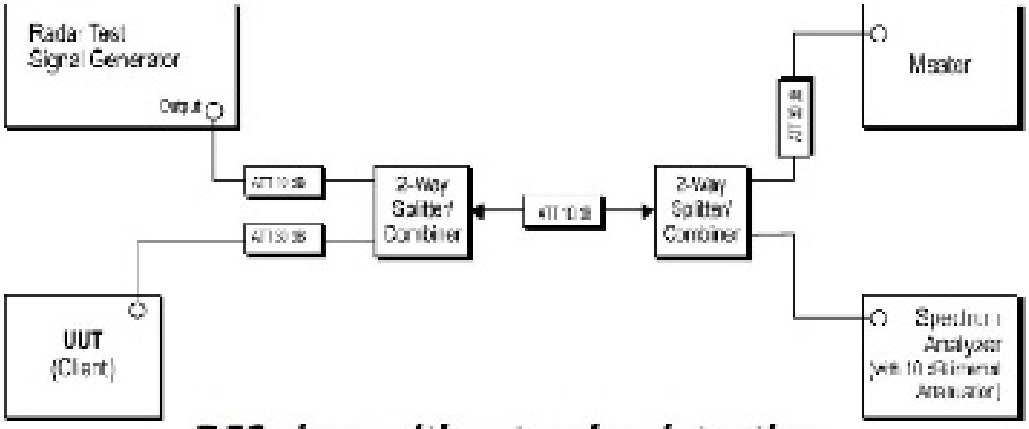

DFS slave without radar detection

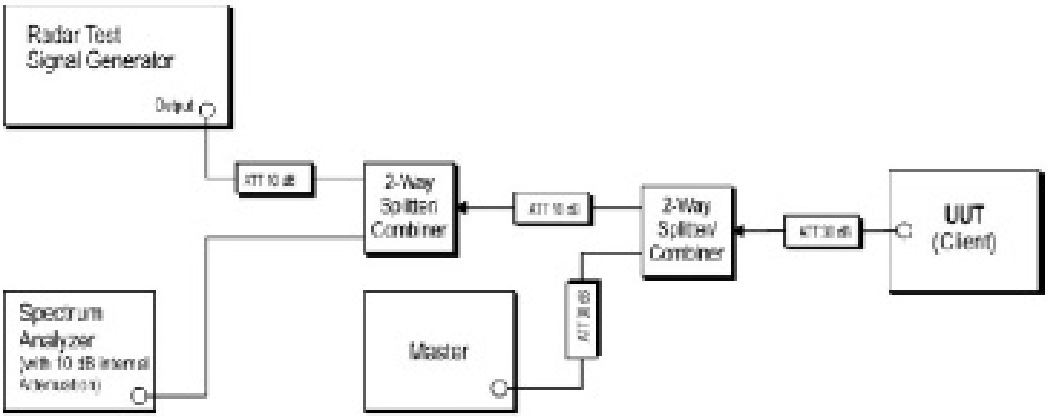

DFS slave with radar detection

Unless otherwise agreed in writing, this document is issued by the Company subject to its General Conditions of Service printed overleaf, available on request or accessible at https://www.sgs.com/en/Terms-and-Conditions. Attention is drawn to the limitation of liability, indemnification and jurisdiction issues defined therein. Any holder of this document is advised that information contained hereon reflects the Company's findings at the time of its intervention only and within the limits of Client's instructions, if any. The Company's sole responsibility is to its Client and this document does not exonerate parties to a transaction from exercising all their rights and obligations under the transaction documents. This document cannot be reproduced except in full, without prior written approval of the Company. Any unauthorized alteration, forgery or falsification of the content or appearance of this document is unlawful and offenders may be prosecuted to the fullest extent of the law. Unless otherwise stated the results shown in this test report refer only to the sample(s) tested and such sample(s) are retained for 30 days only.
Attention: To check the authenticity of testing /inspection report & certificate, please contact us at telephone: (86-755) 8307 1443, or email: CN.Doccheck@sgs.com
SGS-CSTC Standards Technical Services Co., Ltd. Guangzhou Branch Testing Laboratory for EEC Laboratory.
No.198, Kezhu Road, Science City, Economic & Technological Development Area, Guangzhou, Guangdong, China 510663 t (86-20) 82155555 www.sgsgroup.com.cn
中国・广东・广州高新技术产业开发区科学城科珠路198号 邮编：510663 t (86-20) 82155555 sgs.china@sgs.com
Member of the SGS Group (SGS SA)

6.2.4 Measurement Procedure and Data

1) The radar pulse generator is setup to provide a pulse at frequency that the master and client are operating. A type 0 radar pulse with a 1us pulse width and a 1428us PRI is used for the testing.
2) The vector signal generator is adjusted to provide the radar burst (18 pulses) at the level of approximately -61dBm at the antenna port of the master device.
3) A trigger is provided from the pulse generator to the DFS monitoring system in order to capture the traffic and the occurrence of the radar pulse.
4) EUT will associate with the master at channel. The file “iperf.exe” specified by the FCC is streamed from the PC 2 through the master and the client device to the PC 1 and played in full motion video using Media Player Classic Ver. 6.4.8.6 in order to properly load the network for the entire period of the test.
5) When radar burst with a level equal to the DFS Detection Threshold +1dB is generated on the operating channel of the U-NII device. At time T0 the radar waveform generator sends a burst of pulse of the radar waveform at Detection Threshold +1dB.
6) Observe the transmissions of the EUT at the end of the radar Burst on the Operating Channel. Measure and record the transmissions from the UUT during the observation time (Channel Move Time). One 15 seconds plot is reported for the Short Pulse Radar Type 0. The plot for the Short Pulse Radar Types start at the end of the radar burst. The Channel Move Time will be calculated based on the zoom in 600ms plot of the Short Pulse Radar Type.
7) Measurement of the aggregate duration of the Channel Closed Transmission Time method. With the spectrum analyzer set to zero span tuned to the center frequency of the EUT operating channel at the radar simulated frequency, peak detection, and max hold, the dwell time per bin is given by: Dwell (0.3ms) =S (12000ms) / B (4000); where Dwell is the dwell time per spectrum analyzer sampling bin, S is sweep time and B is the number of spectrum analyzer sampling bins. An upper bound of the aggregate duration of the intermittent control signals of Channel Closing Transmission Time is calculated by: C (ms)= N X Dwell (0.3ms); where C is the Closing Time, N is the number of spectrum analyzer sampling bins (intermittent control signals) showing a U-NII transmission and Dwell is the dwell time per bin.
8) Measurement the EUT for more than 30 minutes following the channel move time to verify that no transmission or beacons occur on this channel.

Please Refer to Appendix for Details

通标标准技术服务有限公司广州分公司
检验检测专用章
Inspection & Testing Services
SGS-CSTC Standards Technical Services Co., Ltd. Guangzhou Branch
SGS-CSTC Standards Technical Services Co., Ltd. Guangzhou Branch Testing Center EEC Laboratory.

Unless otherwise agreed in writing, this document is issued by the Company subject to its General Conditions of Service printed overleaf, available on request or accessible at https://www.sgs.com/en/Terms-and-Conditions. Attention is drawn to the limitation of liability, indemnification and jurisdiction issues defined therein. Any holder of this document is advised that information contained hereon reflects the Company's findings at the time of its intervention only and within the limits of Client's instructions, if any. The Company's sole responsibility is to its Client and this document does not exonerate parties to a transaction from exercising all their rights and obligations under the transaction documents. This document cannot be reproduced except in full, without prior written approval of the Company. Any unauthorized alteration, forgery or falsification of the content or appearance of this document is unlawful and offenders may be prosecuted to the fullest extent of the law. Unless otherwise stated the results shown in this test report refer only to the sample(s) tested and such sample(s) are retained for 30 days only.
Attention: To check the authenticity of testing /inspection report & certificate, please contact us at telephone: (86-755) 8307 1443, or email: CN.Doccheck@sgs.com
No.198, Kezhu Road, Science City, Economic & Technological Development Area, Guangzhou, Guangdong, China 510663 t (86–20) 82155555 www.sgsgroup.com.cn
中国・广东・广州高新技术产业开发区科学城科珠路198号 邮编：510663 t (86–20) 82155555 sgs.china@sgs.com

6.3 Channel Closing Transmission Time

Test Requirement KDB 905462 D02 Section 5.1

Test Method: KDB 905462 D02 Section 7.8.3

Limit:

Test item	Limit	Applicability	
		Master Device or client with Radar Detection	Client without Radar Detection
Non-occupancy period	Minimum 30 minutes	Yes	Not required
Channel Availability Check Time	60 seconds	Yes	Not required
Channel Move Time	10 seconds See Note 1.	Yes	Yes
Channel Closing Transmission Time	200 milliseconds + an aggregate of 60 milliseconds over remaining 10 second period. See Notes 1 and 2.	Yes	Yes
U-NII Detection Bandwidth	Minimum 100% of the U-NII 99% transmission power bandwidth. See Note 3.	Yes	Not required

Note 1: Channel Move Time and the Channel Closing Transmission Time should be performed with Radar Type 0. The measurement timing begins at the end of the Radar Type 0 burst.

Note 2: The Channel Closing Transmission Time is comprised of 200 milliseconds starting at the beginning of the Channel Move Time plus any additional intermittent control signals required to facilitate a Channel move (an aggregate of 60 milliseconds) during the remainder of the 10 second period. The aggregate duration of control signals will not count quiet periods in between transmissions.

Note 3: During the U-NII Detection Bandwidth detection test, radar type 0 should be used. For each frequency step the minimum percentage of detection is 90 percent. Measurements are performed with no data traffic.

6.3.1 E.U.T. Operation

Operating Environment:

Temperature: 22.7 °C Humidity: 56.4 % RH Atmospheric Pressure: 1006 mbar

6.3.2 Test Mode Description

Pre-scan / Final test	Mode Code	Description
Final test	08	Normal operating_Keep the EUT communication with the companion device.

Unless otherwise agreed in writing, this document is issued by the Company subject to its General Conditions of Service printed overleaf, available on request or accessible at https://www.sgs.com/en/Terms-and-Conditions. Attention is drawn to the limitation of liability, indemnification and jurisdiction issues defined therein. Any holder of this document is advised that information contained hereon reflects the Company's findings at the time of its intervention only and within the limits of Client's instructions, if any. The Company's sole responsibility is to its Client and this document does not exonerate parties to a transaction from exercising all their rights and obligations under the transaction documents. This document cannot be reproduced except in full, without prior written approval of the Company. Any unauthorized alteration, forgery or falsification of the content or appearance of this document is unlawful and offenders may be prosecuted to the fullest extent of the law. Unless otherwise stated the results shown in this test report refer only to the sample(s) tested and such sample(s) are retained for 30 days only.
Attention: To check the authenticity of testing /inspection report & certificate, please contact us at telephone: (86-755) 8307 1443, or email: CN.Doccheck@sgs.com
SGS-CSTC Standards Technical Services Co., Ltd. Guangzhou Branch Testing Laboratory for EEC Laboratory
No.198, Kezhu Road, Science City, Economic & Technological Development Area, Guangzhou, Guangdong, China 510663 t (86-20) 82155555 www.sgsgroup.com.cn
中国・广东・广州高新技术产业开发区科学城科珠路198号 邮编：510663 t (86-20) 82155555 sgs.china@sgs.com
Member of the SGS Group (SGS SA)

6.3.3 Test Setup Diagram

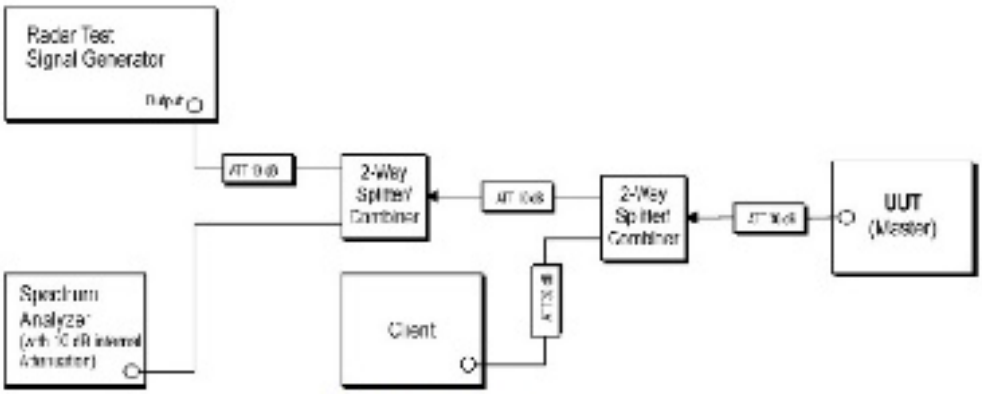

DFS Master

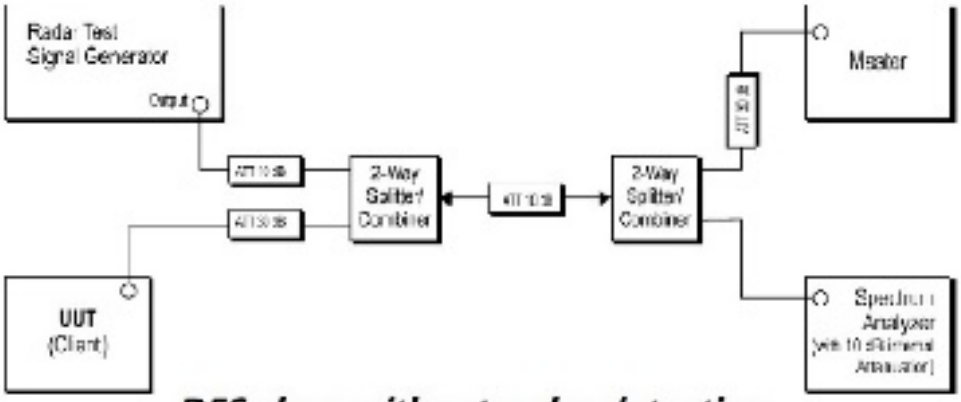

DFS slave without radar detection

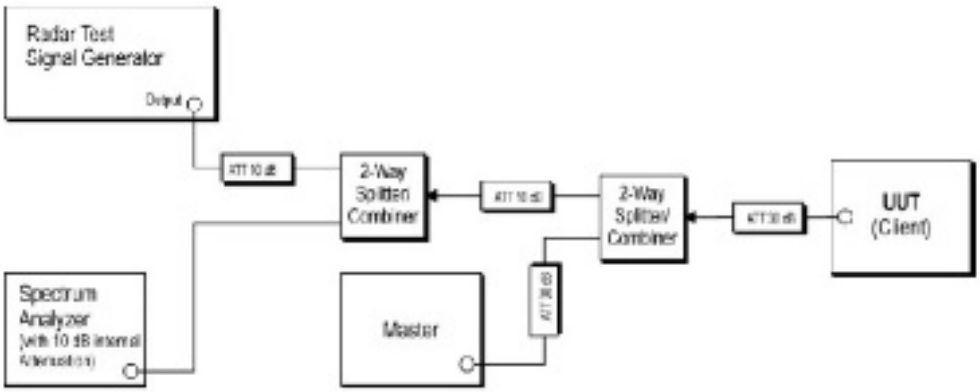

DFS slave with radar detection

Unless otherwise agreed in writing, this document is issued by the Company subject to its General Conditions of Service printed overleaf, available on request or accessible at https://www.sgs.com/en/Terms-and-Conditions. Attention is drawn to the limitation of liability, indemnification and jurisdiction issues defined therein. Any holder of this document is advised that information contained hereon reflects the Company's findings at the time of its intervention only and within the limits of Client's instructions, if any. The Company's sole responsibility is to its Client and this document does not exonerate parties to a transaction from exercising all their rights and obligations under the transaction documents. This document cannot be reproduced except in full, without prior written approval of the Company. Any unauthorized alteration, forgery or falsification of the content or appearance of this document is unlawful and offenders may be prosecuted to the fullest extent of the law. Unless otherwise stated the results shown in this test report refer only to the sample(s) tested and such sample(s) are retained for 30 days only.
Attention: To check the authenticity of testing /inspection report & certificate, please contact us at telephone: (86-755) 8307 1443, or email: CN.Doccheck@sgs.com

6.3.4 Measurement Procedure and Data

1) The radar pulse generator is setup to provide a pulse at frequency that the master and client are operating. A type 0 radar pulse with a 1us pulse width and a 1428us PRI is used for the testing.
2) The vector signal generator is adjusted to provide the radar burst (18 pulses) at the level of approximately -61dBm at the antenna port of the master device.
3) A trigger is provided from the pulse generator to the DFS monitoring system in order to capture the traffic and the occurrence of the radar pulse.
4) EUT will associate with the master at channel. The file “iperf.exe” specified by the FCC is streamed from the PC 2 through the master and the client device to the PC 1 and played in full motion video using Media Player Classic Ver. 6.4.8.6 in order to properly load the network for the entire period of the test.
5) When radar burst with a level equal to the DFS Detection Threshold +1dB is generated on the operating channel of the U-NII device. At time T0 the radar waveform generator sends a burst of pulse of the radar waveform at Detection Threshold +1dB.
6) Observe the transmissions of the EUT at the end of the radar Burst on the Operating Channel. Measure and record the transmissions from the UUT during the observation time (Channel Move Time). One 15 seconds plot is reported for the Short Pulse Radar Type 0. The plot for the Short Pulse Radar Types start at the end of the radar burst. The Channel Move Time will be calculated based on the zoom in 600ms plot of the Short Pulse Radar Type.
7) Measurement of the aggregate duration of the Channel Closed Transmission Time method. With the spectrum analyzer set to zero span tuned to the center frequency of the EUT operating channel at the radar simulated frequency, peak detection, and max hold, the dwell time per bin is given by: Dwell (0.3ms) =S (12000ms) / B (4000); where Dwell is the dwell time per spectrum analyzer sampling bin, S is sweep time and B is the number of spectrum analyzer sampling bins. An upper bound of the aggregate duration of the intermittent control signals of Channel Closing Transmission Time is calculated by: C (ms)= N X Dwell (0.3ms); where C is the Closing Time, N is the number of spectrum analyzer sampling bins (intermittent control signals) showing a U-NII transmission and Dwell is the dwell time per bin.
8) Measurement the EUT for more than 30 minutes following the channel move time to verify that no transmission or beacons occur on this channel.

Please Refer to Appendix for Details

Unless otherwise agreed in writing, this document is issued by the Company subject to its General Conditions of Service printed overleaf, available on request or accessible at https://www.sgs.com/en/Terms-and-Conditions. Attention is drawn to the limitation of liability, indemnification and jurisdiction issues defined therein. Any holder of this document is advised that information contained hereon reflects the Company's findings at the time of its intervention only and within the limits of Client's instructions, if any. The Company's sole responsibility is to its Client and this document does not exonerate parties to a transaction from exercising all their rights and obligations under the transaction documents. This document cannot be reproduced except in full, without prior written approval of the Company. Any unauthorized alteration, forgery or falsification of the content or appearance of this document is unlawful and offenders may be prosecuted to the fullest extent of the law. Unless otherwise stated the results shown in this test report refer only to the sample(s) tested and such sample(s) are retained for 30 days only.
Attention: To check the authenticity of testing /inspection report & certificate, please contact us at telephone: (86-755) 8307 1443, or email: CN.Doccheck@sgs.com
检验检测专用章 Inspection & Testing Services
SGS-CSTC Standards Technical Services Co., Ltd. Guangzhou Branch EMC Laboratory
No.198, Kezhu Road, Science City, Economic & Technological Development Area, Guangzhou, Guangdong, China 510663 t (86-20) 82155555 www.sgsgroup.com.cn
中国・广东・广州高新技术产业开发区科学城科珠路198号 邮编：510663 t (86-20) 82155555 sgs.china@sgs.com
Member of the SGS Group (SGS SA)

7 Test Setup Photo

Refer to Appendix - Test Setup Photos for GZCR250700106506.

Unless otherwise agreed in writing, this document is issued by the Company subject to its General Conditions of Service printed overleaf, available on request or accessible at https://www.sgs.com/en/Terms-and-Conditions. Attention is drawn to the limitation of liability, indemnification and jurisdiction issues defined therein. Any holder of this document is advised that information contained hereon reflects the Company's findings at the time of its intervention only and within the limits of Client's instructions, if any. The Company's sole responsibility is to its Client and this document does not exonerate parties to a transaction from exercising all their rights and obligations under the transaction documents. This document cannot be reproduced except in full, without prior written approval of the Company. Any unauthorized alteration, forgery or falsification of the content or appearance of this document is unlawful and offenders may be prosecuted to the fullest extent of the law. Unless otherwise stated the results shown in this test report refer only to the sample(s) tested and such sample(s) are retained for 30 days only.
Attention: To check the authenticity of testing /inspection report & certificate, please contact us at telephone: (86-755) 8307 1443, or email: CN.Doccheck@sgs.com
检验检测专用章 Inspection & Testing Services
SGS-CSTC Standards Technical Services Co.,Ltd. Guangzhou Branch EMC Laboratory
No.198, Kezhu Road, Science City, Economic & Technological Development Area, Guangzhou, Guangdong, China 510663 t (86-20) 82155555 www.sgsgroup.com.cn
中国・广东・广州高新技术产业开发区科学城科珠路198号 邮编：510663 t (86-20) 82155555 sgs.china@sgs.com
Member of the SGS Group (SGS SA)

8 EUT Constructional Details (EUT Photos)

Refer to External and Internal Photos for GZCR2507001065AT(For Module FCS866R).

Unless otherwise agreed in writing, this document is issued by the Company subject to its General Conditions of Service printed overleaf, available on request or accessible at https://www.sgs.com/en/Terms-and-Conditions. Attention is drawn to the limitation of liability, indemnification and jurisdiction issues defined therein. Any holder of this document is advised that information contained hereon reflects the Company's findings at the time of its intervention only and within the limits of Client's instructions, if any. The Company's sole responsibility is to its Client and this document does not exonerate parties to a transaction from exercising all their rights and obligations under the transaction documents. This document cannot be reproduced except in full, without prior written approval of the Company. Any unauthorized alteration, forgery or falsification of the content or appearance of this document is unlawful and offenders may be prosecuted to the fullest extent of the law. Unless otherwise stated the results shown in this test report refer only to the sample(s) tested and such sample(s) are retained for 30 days only.
Attention: To check the authenticity of testing /inspection report & certificate, please contact us at telephone: (86-755) 8307 1443, or email: CN.Doccheck@sgs.com

SGS-CSTC Standards Technical Services Co.,Ltd. Guangzhou Branch Testing Center EEC Laboratory.
No.198, Kezhu Road, Science City, Economic & Technological Development Area, Guangzhou, Guangdong, China 510663 t (86-20) 82155555 www.sgsgroup.com.cn
中国・广东・广州高新技术产业开发区科学城科珠路198号 邮编：510663 t (86-20) 82155555 sgs.china@sgs.com

9 Appendix

1. Signal Calibration

1.1 Test Result

1.1.1 SC

Band: 2A							
Mode	Bandwidth (MHz)	Frequency (MHz)	Radar Signal		Signal Calibration		Verdict
			Type	Trial Id	Result	Limit	
802.11ac (VHT20)	20	5320	0	0	Refer To Test Graph		Pass
			1	0	Refer To Test Graph		Pass
			2	0	Refer To Test Graph		Pass
			3	0	Refer To Test Graph		Pass
			4	0	Refer To Test Graph		Pass
			5	0	Refer To Test Graph		Pass
			6	0	Refer To Test Graph		Pass

1.1.2 SC

Band: 2C							
Mode	Bandwidth (MHz)	Frequency (MHz)	Radar Signal		Signal Calibration		Verdict
			Type	Trial Id	Result	Limit	
802.11ac (VHT20)	20	5500	0	0	Refer To Test Graph		Pass
			1	0	Refer To Test Graph		Pass
			2	0	Refer To Test Graph		Pass
			3	0	Refer To Test Graph		Pass
			4	0	Refer To Test Graph		Pass
			5	0	Refer To Test Graph		Pass
			6	0	Refer To Test Graph		Pass

Unless otherwise agreed in writing, this document is issued by the Company subject to its General Conditions of Service printed overleaf, available on request or accessible at https://www.sgs.com/en/Terms-and-Conditions. Attention is drawn to the limitation of liability, indemnification and jurisdiction issues defined therein. Any holder of this document is advised that information contained hereon reflects the Company's findings at the time of its intervention only and within the limits of Client's instructions, if any. The Company's sole responsibility is to its Client and this document does not exonerate parties to a transaction from exercising all their rights and obligations under the transaction documents. This document cannot be reproduced except in full, without prior written approval of the Company. Any unauthorized alteration, forgery or falsification of the content or appearance of this document is unlawful and offenders may be prosecuted to the fullest extent of the law. Unless otherwise stated the results shown in this test report refer only to the sample(s) tested and such sample(s) are retained for 30 days only.
Attention: To check the authenticity of testing /inspection report & certificate, please contact us at telephone: (86-755) 8307 1443, or email: CN.Doccheck@sgs.com
SGS-CSTC Standards Technical Services Co., Ltd. Guangzhou Branch EEC Laboratory
No.198, Kezhu Road, Science City, Economic & Technological Development Area, Guangzhou, Guangdong, China 510663 t (86-20) 82155555 www.sgsgroup.com.cn
中国・广东・广州高新技术产业开发区科学城科珠路198号 邮编：510663 t (86-20) 82155555 sgs.china@sgs.com
Member of the SGS Group (SGS SA)

1.2 Test Graph

1.2.1 SC

Signal Calibration_802.11ac(VHT20)_2A_5320MHz_RadarType0_Trial0

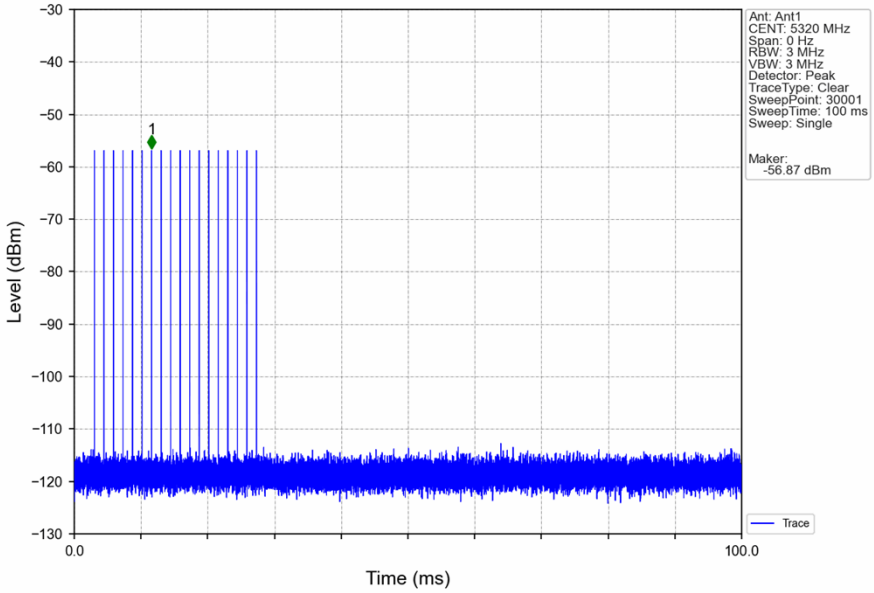

Signal Calibration_802.11ac(VHT20)_2A_5320MHz_RadarType1_Trial0

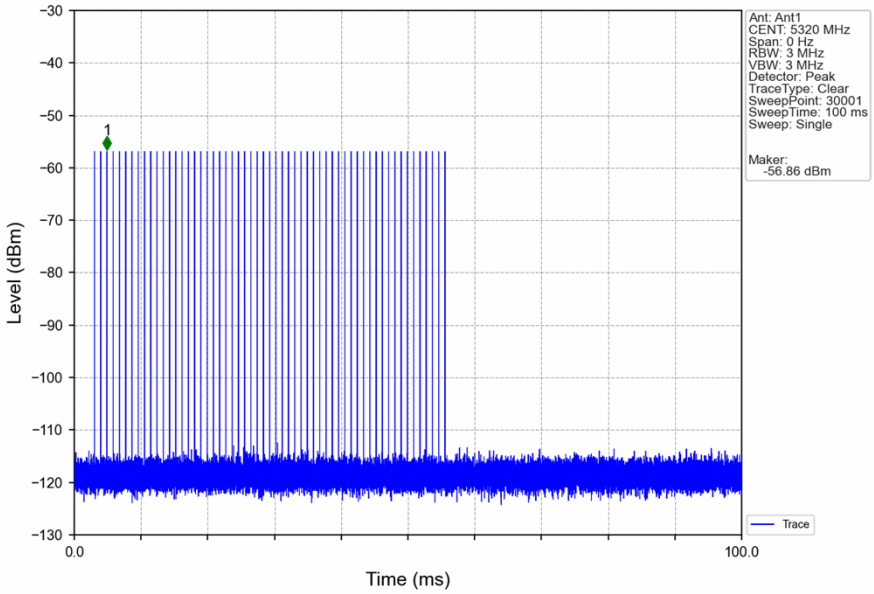

Unless otherwise agreed in writing, this document is issued by the Company subject to its General Conditions of Service printed overleaf, available on request or accessible at https://www.sgs.com/en/Terms-and-Conditions. Attention is drawn to the limitation of liability, indemnification and jurisdiction issues defined therein. Any holder of this document is advised that information contained hereon reflects the Company's findings at the time of its intervention only and within the limits of Client's instructions, if any. The Company's sole responsibility is to its Client and this document does not exonerate parties to a transaction from exercising all their rights and obligations under the transaction documents. This document cannot be reproduced except in full, without prior written approval of the Company. Any unauthorized alteration, forgery or falsification of the content or appearance of this document is unlawful and offenders may be prosecuted to the fullest extent of the law. Unless otherwise stated the results shown in this test report refer only to the sample(s) tested and such sample(s) are retained for 30 days only.
Attention: To check the authenticity of testing /inspection report & certificate, please contact us at telephone: (86-755) 8307 1443, or email: CN.Doccheck@sgs.com
SGS-CSTC Standards Technical Services Co., Ltd. Guangzhou Branch EMC Laboratory
No.198, Kezhu Road, Science City, Economic & Technological Development Area, Guangzhou, Guangdong, China 510663 t (86-20) 82155555 www.sgsgroup.com.cn
中国・广东・广州高新技术产业开发区科学城科珠路198号 邮编：510663 t (86-20) 82155555 sgs.china@sgs.com
Member of the SGS Group (SGS SA)

Signal Calibration_802.11ac(VHT20)_2A_5320MHz_RadarType2_Trial0

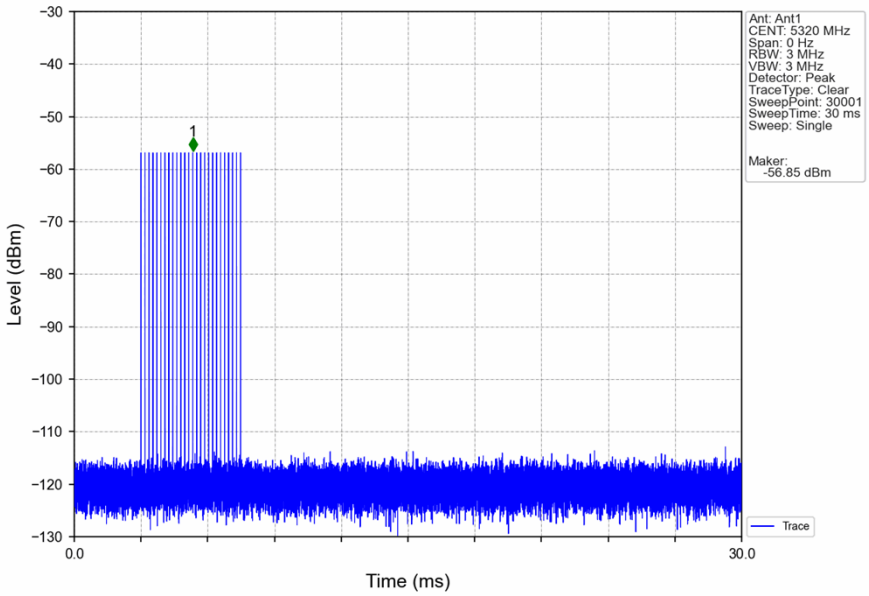

Signal Calibration_802.11ac(VHT20)_2A_5320MHz_RadarType3_Trial0

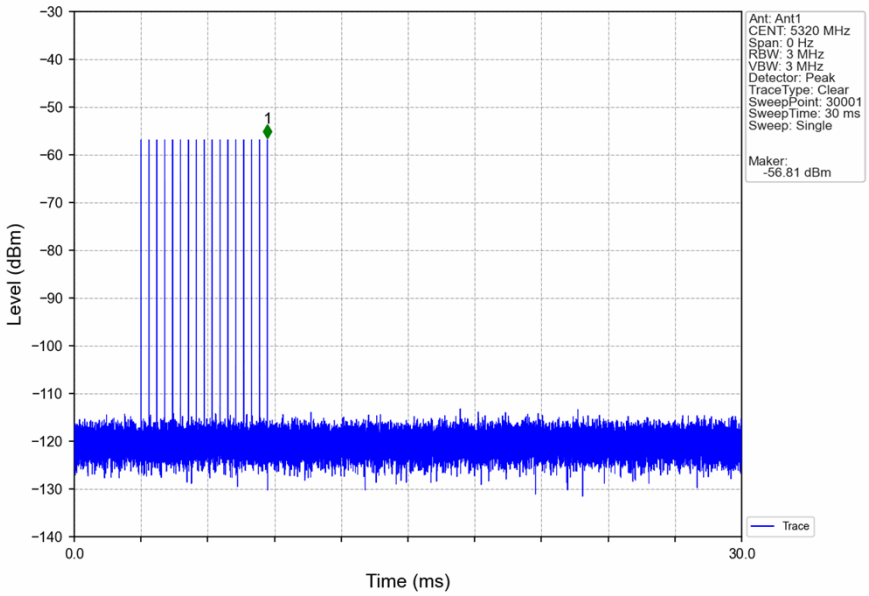

Unless otherwise agreed in writing, this document is issued by the Company subject to its General Conditions of Service printed overleaf, available on request or accessible at https://www.sgs.com/en/Terms-and-Conditions. Attention is drawn to the limitation of liability, indemnification and jurisdiction issues defined therein. Any holder of this document is advised that information contained hereon reflects the Company's findings at the time of its intervention only and within the limits of Client's instructions, if any. The Company's sole responsibility is to its Client and this document does not exonerate parties to a transaction from exercising all their rights and obligations under the transaction documents. This document cannot be reproduced except in full, without prior written approval of the Company. Any unauthorized alteration, forgery or falsification of the content or appearance of this document is unlawful and offenders may be prosecuted to the fullest extent of the law. Unless otherwise stated the results shown in this test report refer only to the sample(s) tested and such sample(s) are retained for 30 days only.
Attention: To check the authenticity of testing /inspection report & certificate, please contact us at telephone: (86-755) 8307 1443, or email: CN.Doccheck@sgs.com

Signal Calibration_802.11ac(VHT20)_2A_5320MHz_RadarType4_Trial0

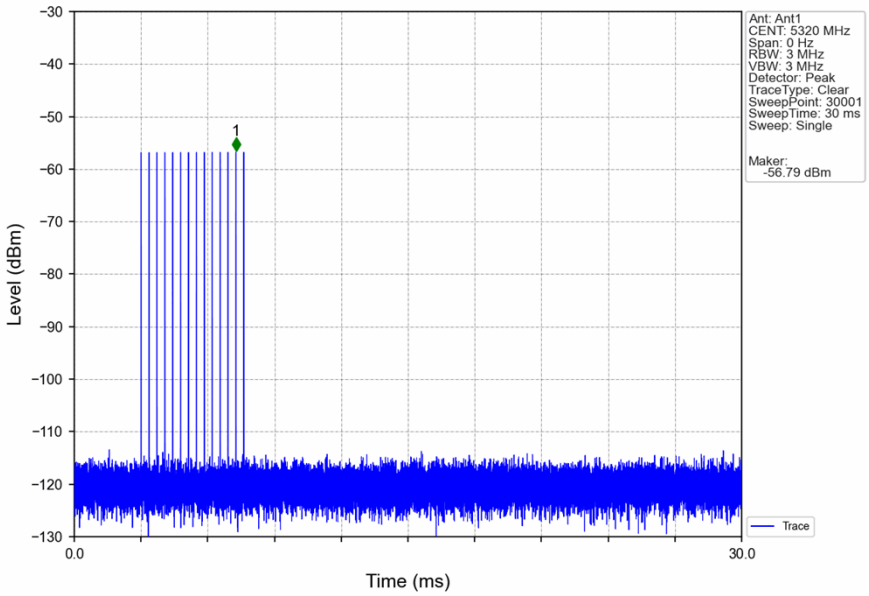

Signal Calibration_802.11ac(VHT20)_2A_5320MHz_RadarType5_Trial0

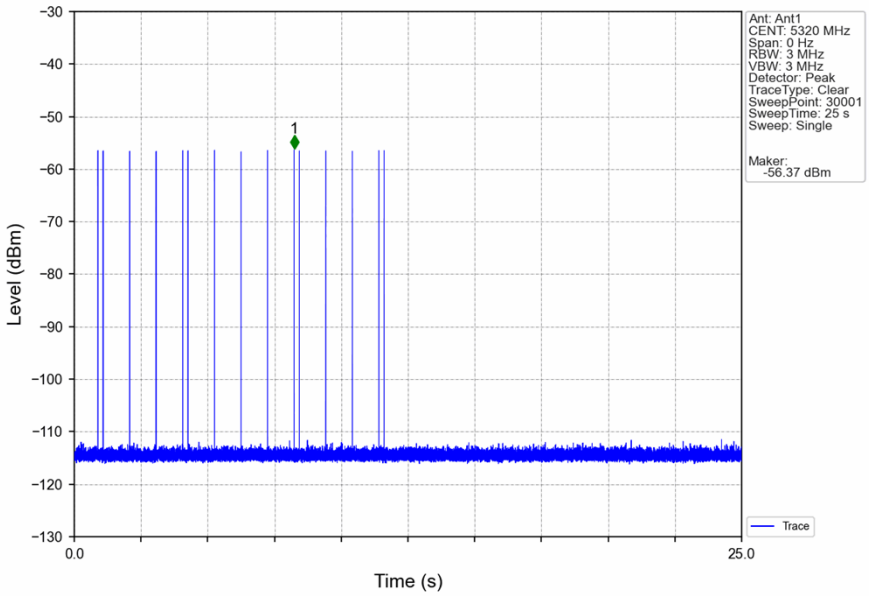

Unless otherwise agreed in writing, this document is issued by the Company subject to its General Conditions of Service printed overleaf, available on request or accessible at https://www.sgs.com/en/Terms-and-Conditions. Attention is drawn to the limitation of liability, indemnification and jurisdiction issues defined therein. Any holder of this document is advised that information contained hereon reflects the Company's findings at the time of its intervention only and within the limits of Client's instructions, if any. The Company's sole responsibility is to its Client and this document does not exonerate parties to a transaction from exercising all their rights and obligations under the transaction documents. This document cannot be reproduced except in full, without prior written approval of the Company. Any unauthorized alteration, forgery or falsification of the content or appearance of this document is unlawful and offenders may be prosecuted to the fullest extent of the law. Unless otherwise stated the results shown in this test report refer only to the sample(s) tested and such sample(s) are retained for 30 days only.
Attention: To check the authenticity of testing /inspection report & certificate, please contact us at telephone: (86-755) 8307 1443, or email: CN.Doccheck@sgs.com

Signal Calibration_802.11ac(VHT20)_2A_5320MHz_RadarType6_Trial0

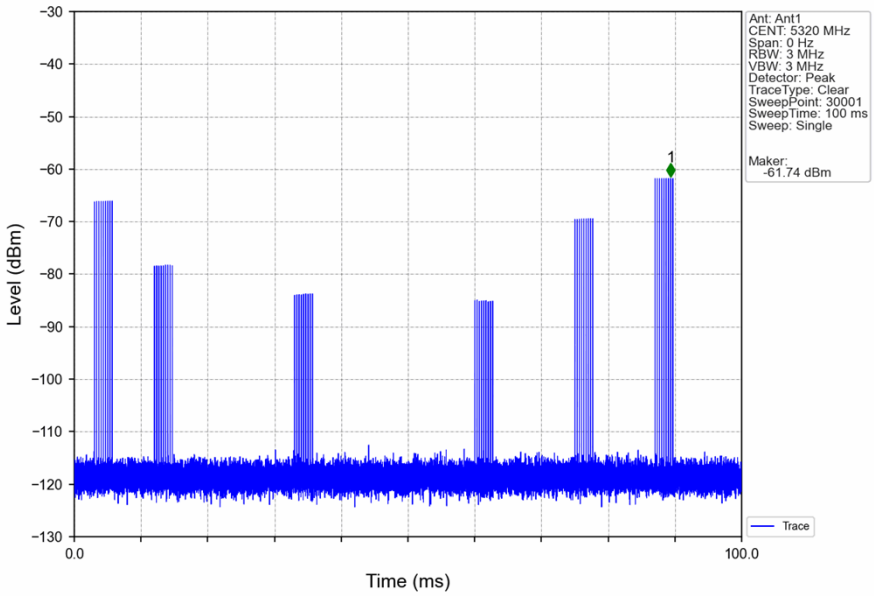

Unless otherwise agreed in writing, this document is issued by the Company subject to its General Conditions of Service printed overleaf, available on request or accessible at https://www.sgs.com/en/Terms-and-Conditions. Attention is drawn to the limitation of liability, indemnification and jurisdiction issues defined therein. Any holder of this document is advised that information contained hereon reflects the Company's findings at the time of its intervention only and within the limits of Client's instructions, if any. The Company's sole responsibility is to its Client and this document does not exonerate parties to a transaction from exercising all their rights and obligations under the transaction documents. This document cannot be reproduced except in full, without prior written approval of the Company. Any unauthorized alteration, forgery or falsification of the content or appearance of this document is unlawful and offenders may be prosecuted to the fullest extent of the law. Unless otherwise stated the results shown in this test report refer only to the sample(s) tested and such sample(s) are retained for 30 days only.
Attention: To check the authenticity of testing /inspection report & certificate, please contact us at telephone: (86-755) 8307 1443, or email: CN.Doccheck@sgs.com
SGS-CSTC Standards Technical Services Co., Ltd. Guangzhou Branch EMC Laboratory
No.198, Kezhu Road, Science City, Economic & Technological Development Area, Guangzhou, Guangdong, China 510663 t (86-20) 82155555 www.sgsgroup.com.cn
中国・广东・广州高新技术产业开发区科学城科珠路198号 邮编：510663 t (86-20) 82155555 sgs.china@sgs.com
Member of the SGS Group (SGS SA)

1.2.2 SC

Signal Calibration_802.11ac(VHT20)_2C_5500MHz_RadarType0_Trial0

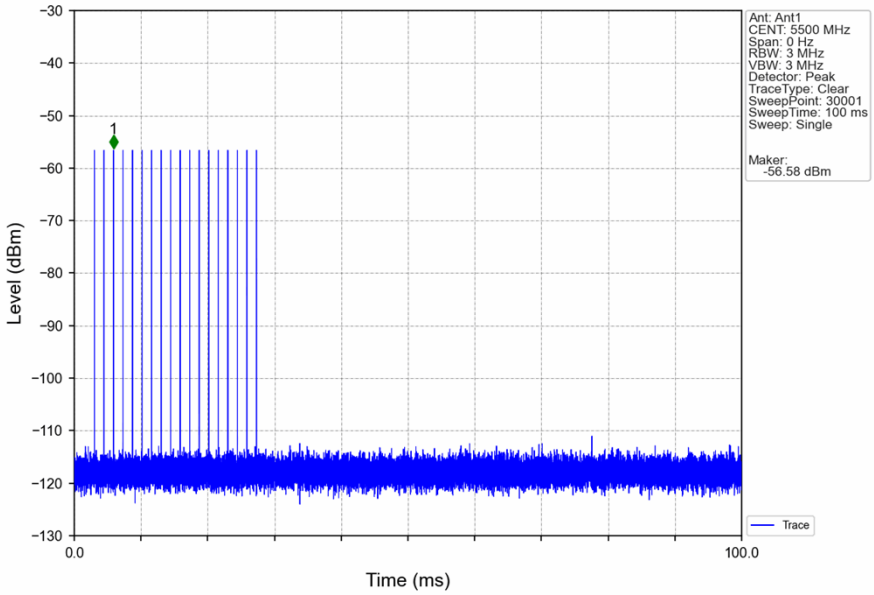

Signal Calibration_802.11ac(VHT20)_2C_5500MHz_RadarType1_Trial0

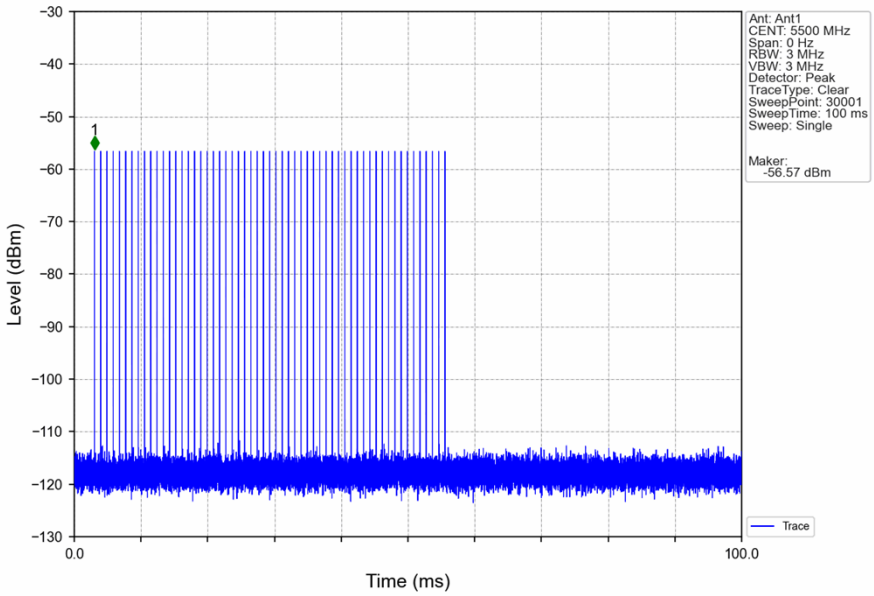

Unless otherwise agreed in writing, this document is issued by the Company subject to its General Conditions of Service printed overleaf, available on request or accessible at https://www.sgs.com/en/Terms-and-Conditions. Attention is drawn to the limitation of liability, indemnification and jurisdiction issues defined therein. Any holder of this document is advised that information contained hereon reflects the Company's findings at the time of its intervention only and within the limits of Client's instructions, if any. The Company's sole responsibility is to its Client and this document does not exonerate parties to a transaction from exercising all their rights and obligations under the transaction documents. This document cannot be reproduced except in full, without prior written approval of the Company. Any unauthorized alteration, forgery or falsification of the content or appearance of this document is unlawful and offenders may be prosecuted to the fullest extent of the law. Unless otherwise stated the results shown in this test report refer only to the sample(s) tested and such sample(s) are retained for 30 days only.
Attention: To check the authenticity of testing /inspection report & certificate, please contact us at telephone: (86-755) 8307 1443, or email: CN.Doccheck@sgs.com
SGS-CSTC Standards Technical Services Co., Ltd. Guangzhou Branch EMC Laboratory
No.198, Kezhu Road, Science City, Economic & Technological Development Area, Guangzhou, Guangdong, China 510663 t (86-20) 82155555 www.sgsgroup.com.cn
中国・广东・广州高新技术产业开发区科学城科珠路198号 邮编：510663 t (86-20) 82155555 sgs.china@sgs.com
Member of the SGS Group (SGS SA)

Signal Calibration_802.11ac(VHT20)_2C_5500MHz_RadarType2_Trial0

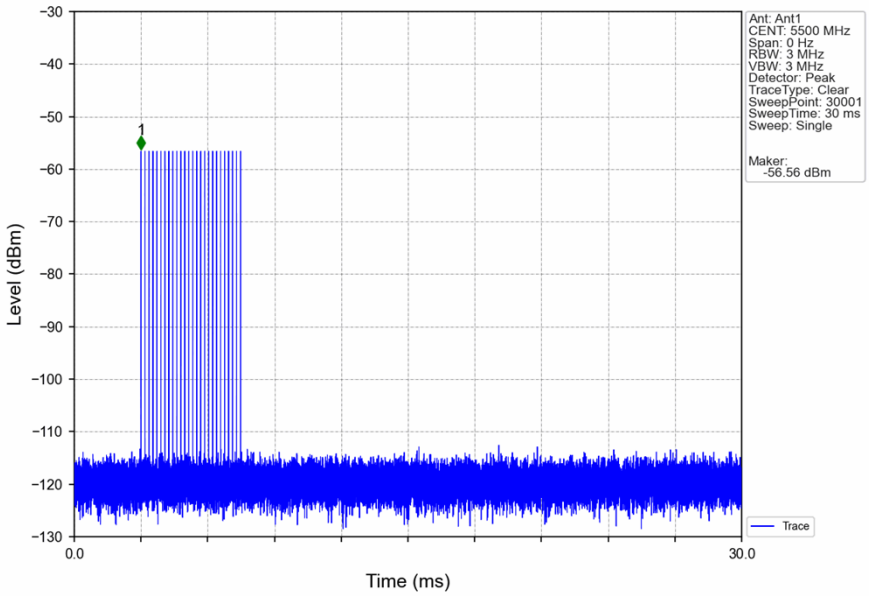

Signal Calibration_802.11ac(VHT20)_2C_5500MHz_RadarType3_Trial0

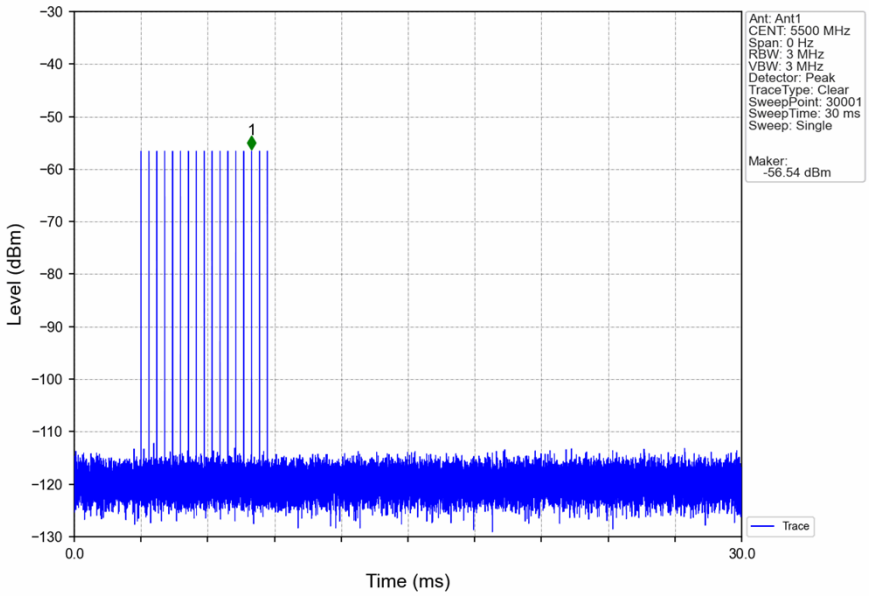

Unless otherwise agreed in writing, this document is issued by the Company subject to its General Conditions of Service printed overleaf, available on request or accessible at https://www.sgs.com/en/Terms-and-Conditions. Attention is drawn to the limitation of liability, indemnification and jurisdiction issues defined therein. Any holder of this document is advised that information contained hereon reflects the Company's findings at the time of its intervention only and within the limits of Client's instructions, if any. The Company's sole responsibility is to its Client and this document does not exonerate parties to a transaction from exercising all their rights and obligations under the transaction documents. This document cannot be reproduced except in full, without prior written approval of the Company. Any unauthorized alteration, forgery or falsification of the content or appearance of this document is unlawful and offenders may be prosecuted to the fullest extent of the law. Unless otherwise stated the results shown in this test report refer only to the sample(s) tested and such sample(s) are retained for 30 days only.
Attention: To check the authenticity of testing /inspection report & certificate, please contact us at telephone: (86-755) 8307 1443, or email: CN.Doccheck@sgs.com
No.198, Kezhu Road, Science City, Economic & Technological Development Area, Guangzhou, Guangdong, China 510663 t (86-20) 82155555 www.sgsgroup.com.cn
中国・广东・广州高新技术产业开发区科学城科珠路198号 邮编：510663 t (86-20) 82155555 sgs.china@sgs.com

Signal Calibration_802.11ac(VHT20)_2C_5500MHz_RadarType4_Trial0

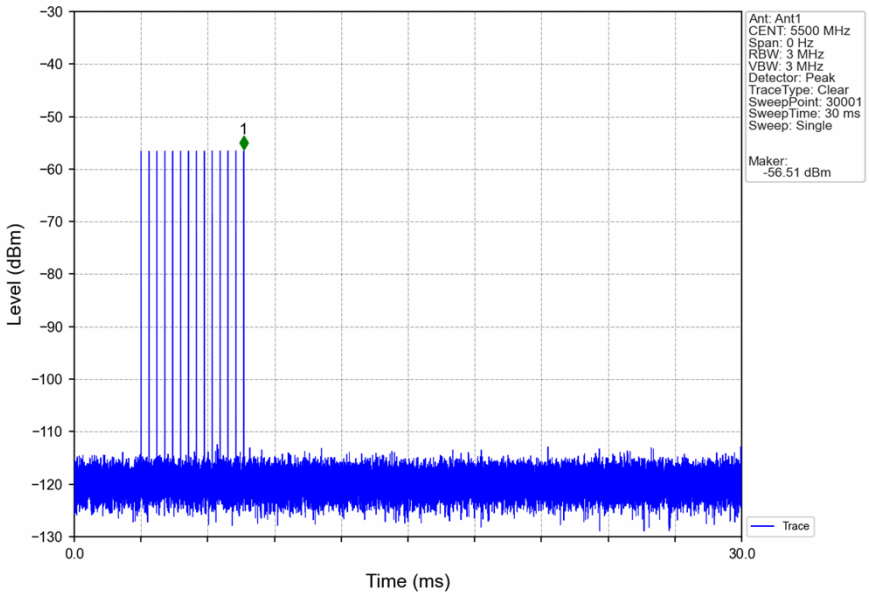

Signal Calibration_802.11ac(VHT20)_2C_5500MHz_RadarType5_Trial0

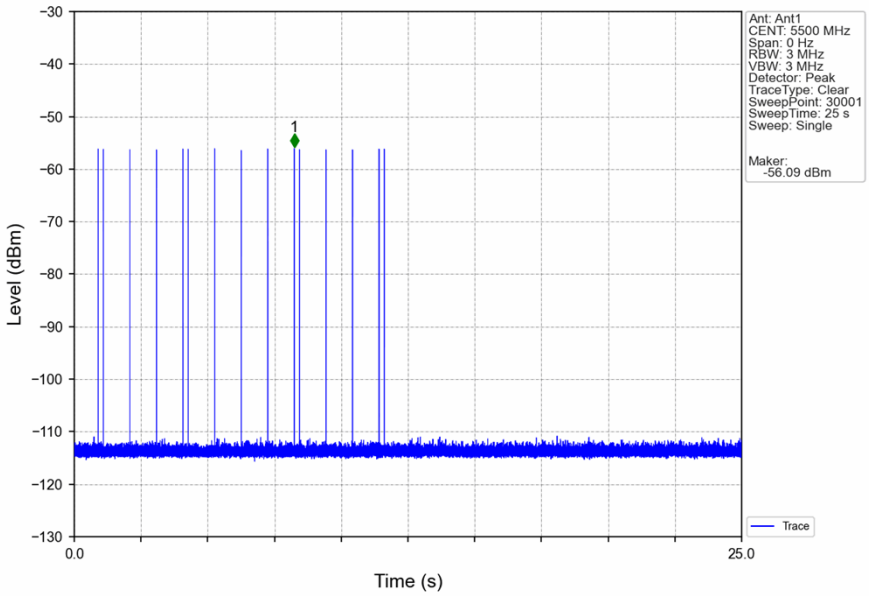

Unless otherwise agreed in writing, this document is issued by the Company subject to its General Conditions of Service printed overleaf, available on request or accessible at https://www.sgs.com/en/Terms-and-Conditions. Attention is drawn to the limitation of liability, indemnification and jurisdiction issues defined therein. Any holder of this document is advised that information contained hereon reflects the Company's findings at the time of its intervention only and within the limits of Client's instructions, if any. The Company's sole responsibility is to its Client and this document does not exonerate parties to a transaction from exercising all their rights and obligations under the transaction documents. This document cannot be reproduced except in full, without prior written approval of the Company. Any unauthorized alteration, forgery or falsification of the content or appearance of this document is unlawful and offenders may be prosecuted to the fullest extent of the law. Unless otherwise stated the results shown in this test report refer only to the sample(s) tested and such sample(s) are retained for 30 days only.
Attention: To check the authenticity of testing /inspection report & certificate, please contact us at telephone: (86-755) 8307 1443, or email: CN.Doccheck@sgs.com

Signal Calibration_802.11ac(VHT20)_2C_5500MHz_RadarType6_Trial0

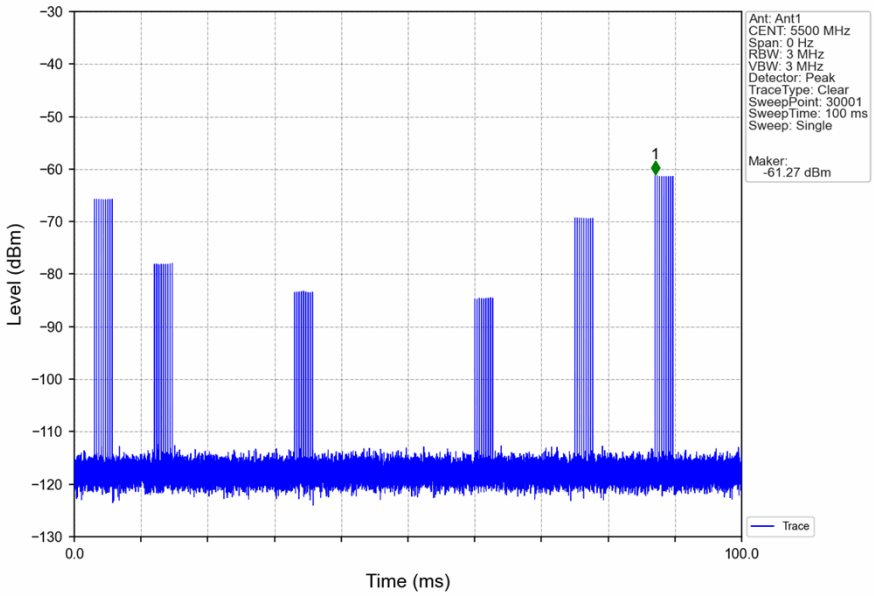

Unless otherwise agreed in writing, this document is issued by the Company subject to its General Conditions of Service printed overleaf, available on request or accessible at https://www.sgs.com/en/Terms-and-Conditions. Attention is drawn to the limitation of liability, indemnification and jurisdiction issues defined therein. Any holder of this document is advised that information contained hereon reflects the Company's findings at the time of its intervention only and within the limits of Client's instructions, if any. The Company's sole responsibility is to its Client and this document does not exonerate parties to a transaction from exercising all their rights and obligations under the transaction documents. This document cannot be reproduced except in full, without prior written approval of the Company. Any unauthorized alteration, forgery or falsification of the content or appearance of this document is unlawful and offenders may be prosecuted to the fullest extent of the law. Unless otherwise stated the results shown in this test report refer only to the sample(s) tested and such sample(s) are retained for 30 days only.
Attention: To check the authenticity of testing /inspection report & certificate, please contact us at telephone: (86-755) 8307 1443, or email: CN.Doccheck@sgs.com
SGS-CSTC Standards Technical Services Co., Ltd. Guangzhou Branch EMC Laboratory
No.198, Kezhu Road, Science City, Economic & Technological Development Area, Guangzhou, Guangdong, China 510663 t (86-20) 82155555 www.sgsgroup.com.cn
中国・广东・广州高新技术产业开发区科学城科珠路198号 邮编：510663 t (86-20) 82155555 sgs.china@sgs.com
Member of the SGS Group (SGS SA)

2. Channel Loading (Payload)

2.1 Test Result

2.1.1 Payload

Band: 2A					
Mode	Bandwidth (MHz)	Frequency (MHz)	Channel Loading (Payload) (%)		Verdict
			Result	Limit	
802.11ac (VHT20)	20	5320	57.12	>=17	Pass

2.1.2 Payload

Band: 2C					
Mode	Bandwidth (MHz)	Frequency (MHz)	Channel Loading (Payload) (%)		Verdict
			Result	Limit	
802.11ac (VHT20)	20	5500	62.90	>=17	Pass

Unless otherwise agreed in writing, this document is issued by the Company subject to its General Conditions of Service printed overleaf, available on request or accessible at https://www.sgs.com/en/Terms-and-Conditions. Attention is drawn to the limitation of liability, indemnification and jurisdiction issues defined therein. Any holder of this document is advised that information contained hereon reflects the Company's findings at the time of its intervention only and within the limits of Client's instructions, if any. The Company's sole responsibility is to its Client and this document does not exonerate parties to a transaction from exercising all their rights and obligations under the transaction documents. This document cannot be reproduced except in full, without prior written approval of the Company. Any unauthorized alteration, forgery or falsification of the content or appearance of this document is unlawful and offenders may be prosecuted to the fullest extent of the law. Unless otherwise stated the results shown in this test report refer only to the sample(s) tested and such sample(s) are retained for 30 days only.
Attention: To check the authenticity of testing /inspection report & certificate, please contact us at telephone: (86-755) 8307 1443, or email: CN.Doccheck@sgs.com
SGS-CSTC Standards Technical Services Co., Ltd. Guangzhou Branch EMC Laboratory
No.198, Kezhu Road, Science City, Economic & Technological Development Area, Guangzhou, Guangdong, China 510663 t (86-20) 82155555 www.sgsgroup.com.cn
中国・广东・广州高新技术产业开发区科学城科珠路198号 邮编：510663 t (86-20) 82155555 sgs.china@sgs.com
Member of the SGS Group (SGS SA)

2.2 Test Graph

2.2.1 Payload

Channel Loading (Payload)_802.11ac(VHT20)_2A_5320MHz

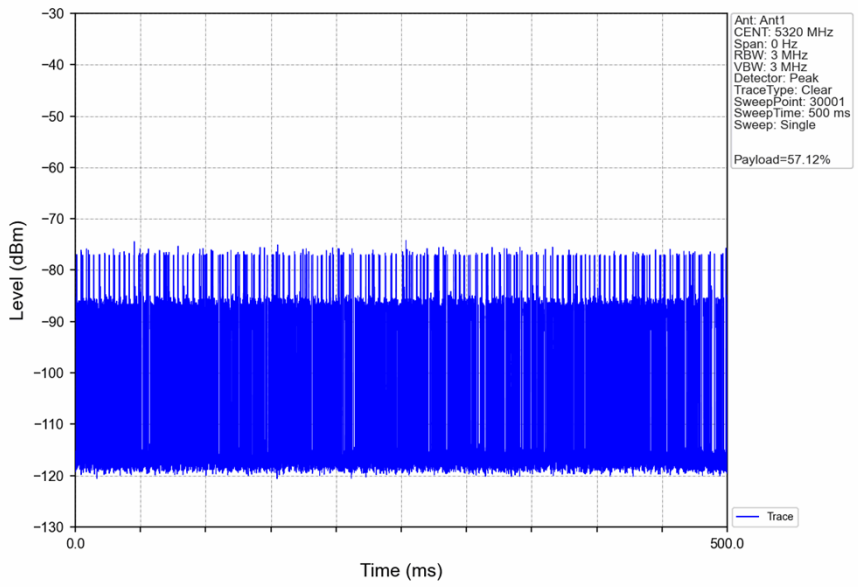

2.2.2 Payload

Channel Loading (Payload)_802.11ac(VHT20)_2C_5500MHz

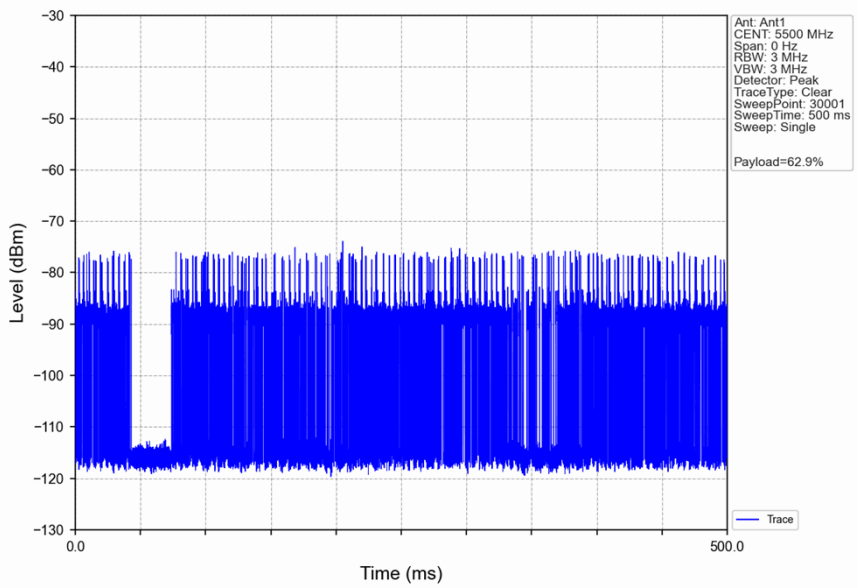

Unless otherwise agreed in writing, this document is issued by the Company subject to its General Conditions of Service printed overleaf, available on request or accessible at https://www.sgs.com/en/Terms-and-Conditions. Attention is drawn to the limitation of liability, indemnification and jurisdiction issues defined therein. Any holder of this document is advised that information contained hereon reflects the Company's findings at the time of its intervention only and within the limits of Client's instructions, if any. The Company's sole responsibility is to its Client and this document does not exonerate parties to a transaction from exercising all their rights and obligations under the transaction documents. This document cannot be reproduced except in full, without prior written approval of the Company. Any unauthorized alteration, forgery or falsification of the content or appearance of this document is unlawful and offenders may be prosecuted to the fullest extent of the law. Unless otherwise stated the results shown in this test report refer only to the sample(s) tested and such sample(s) are retained for 30 days only.
Attention: To check the authenticity of testing /inspection report & certificate, please contact us at telephone: (86-755) 8307 1443, or email: CN.Doccheck@sgs.com

3. Channel Move Time and Closing Transmission Time

3.1 Test Result

3.1.1 CMT_CTT

Band: 2A							
Mode	Bandwidth (MHz)	Frequency (MHz)	Channel Closing Transmission Time (ms)		Channel Move Time (s)		Verdict
			Result	Limit	Result	Limit	
802.11ac (VHT20)	20	5320	0.000	<= 60	0.173	<=10	Pass

3.1.2 CMT_CTT

Band: 2C							
Mode	Bandwidth (MHz)	Frequency (MHz)	Channel Closing Transmission Time (ms)		Channel Move Time (s)		Verdict
			Result	Limit	Result	Limit	
802.11ac (VHT20)	20	5500	0.000	<= 60	0.123	<=10	Pass

Unless otherwise agreed in writing, this document is issued by the Company subject to its General Conditions of Service printed overleaf, available on request or accessible at https://www.sgs.com/en/Terms-and-Conditions. Attention is drawn to the limitation of liability, indemnification and jurisdiction issues defined therein. Any holder of this document is advised that information contained hereon reflects the Company's findings at the time of its intervention only and within the limits of Client's instructions, if any. The Company's sole responsibility is to its Client and this document does not exonerate parties to a transaction from exercising all their rights and obligations under the transaction documents. This document cannot be reproduced except in full, without prior written approval of the Company. Any unauthorized alteration, forgery or falsification of the content or appearance of this document is unlawful and offenders may be prosecuted to the fullest extent of the law. Unless otherwise stated the results shown in this test report refer only to the sample(s) tested and such sample(s) are retained for 30 days only.
Attention: To check the authenticity of testing /inspection report & certificate, please contact us at telephone: (86-755) 8307 1443, or email: CN.Doccheck@sgs.com
SGS-CSTC Standards Technical Services Co., Ltd. Guangzhou Branch EMC Laboratory
No.198, Kezhu Road, Science City, Economic & Technological Development Area, Guangzhou, Guangdong, China 510663 t (86-20) 82155555 www.sgsgroup.com.cn
中国・广东・广州高新技术产业开发区科学城科珠路198号 邮编：510663 t (86-20) 82155555 sgs.china@sgs.com
Member of the SGS Group (SGS SA)

3.2 Test Graph

3.2.1 CMT_CTT

Channel Move Time and Closing Transmission Time_802.11ac(VHT20)_2A_5320MHz

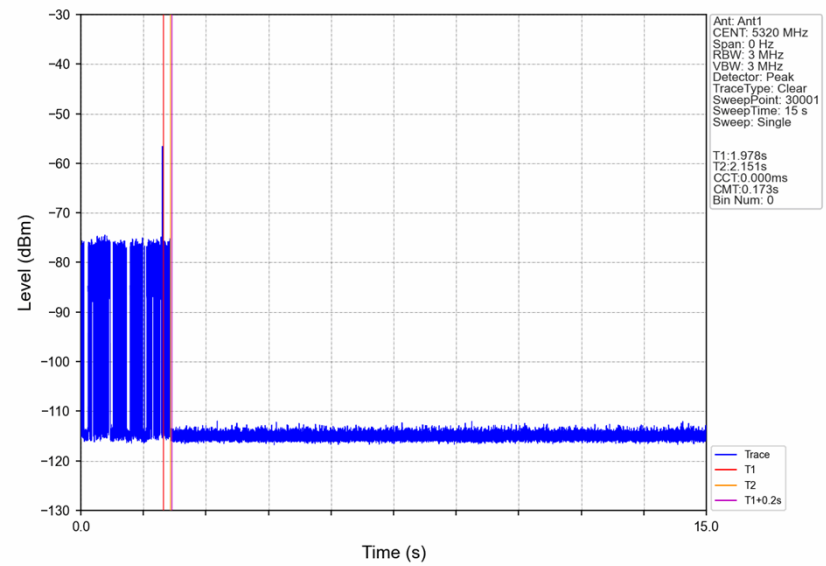

3.2.2 CMT_CTT

Channel Move Time and Closing Transmission Time_802.11ac(VHT20)_2C_5500MHz

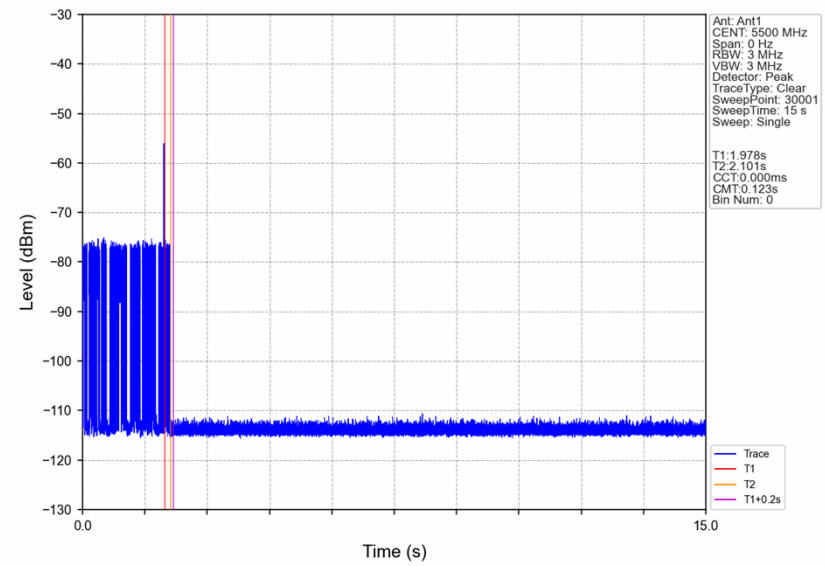

Unless otherwise agreed in writing, this document is issued by the Company subject to its General Conditions of Service printed overleaf, available on request or accessible at https://www.sgs.com/en/Terms-and-Conditions. Attention is drawn to the limitation of liability, indemnification and jurisdiction issues defined therein. Any holder of this document is advised that information contained hereon reflects the Company's findings at the time of its intervention only and within the limits of Client's instructions, if any. The Company's sole responsibility is to its Client and this document does not exonerate parties to a transaction from exercising all their rights and obligations under the transaction documents. This document cannot be reproduced except in full, without prior written approval of the Company. Any unauthorized alteration, forgery or falsification of the content or appearance of this document is unlawful and offenders may be prosecuted to the fullest extent of the law. Unless otherwise stated the results shown in this test report refer only to the sample(s) tested and such sample(s) are retained for 30 days only.
Attention: To check the authenticity of testing /inspection report & certificate, please contact us at telephone: (86-755) 8307 1443, or email: CN.Doccheck@sgs.com
SGS-CSTC Standards Technical Services Co., Ltd. Guangzhou Branch EMC Laboratory
No.198, Kezhu Road, Science City, Economic & Technological Development Area, Guangzhou, Guangdong, China 510663 t (86-20) 82155555 www.sgsgroup.com.cn
中国・广东・广州高新技术产业开发区科学城科珠路198号 邮编：510663 t (86-20) 82155555 sgs.china@sgs.com
Member of the SGS Group (SGS SA)

4. Non-Occupancy Period

4.1 Test Result

4.1.1 Period

Band: 2A					
Mode	Bandwidth (MHz)	Frequency (MHz)	Non-Occupancy Period		Verdict
			Result	Limit	
802.11ac (VHT20)	20	5320	Refer To Test Graph		Pass

4.1.2 Period

Band: 2C					
Mode	Bandwidth (MHz)	Frequency (MHz)	Non-Occupancy Period		Verdict
			Result	Limit	
802.11ac (VHT20)	20	5500	Refer To Test Graph		Pass

4.2 Test Graph

4.2.1 Period

Non-Occupancy Period_802.11ac(VHT20)_2A_5320MHz

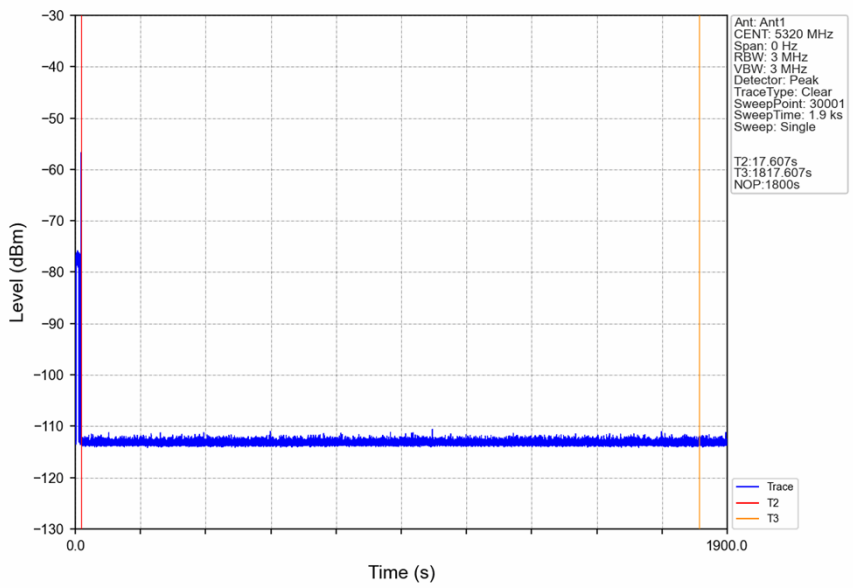

Unless otherwise agreed in writing, this document is issued by the Company subject to its General Conditions of Service printed overleaf, available on request or accessible at https://www.sgs.com/en/Terms-and-Conditions. Attention is drawn to the limitation of liability, indemnification and jurisdiction issues defined therein. Any holder of this document is advised that information contained hereon reflects the Company's findings at the time of its intervention only and within the limits of Client's instructions, if any. The Company's sole responsibility is to its Client and this document does not exonerate parties to a transaction from exercising all their rights and obligations under the transaction documents. This document cannot be reproduced except in full, without prior written approval of the Company. Any unauthorized alteration, forgery or falsification of the content or appearance of this document is unlawful and offenders may be prosecuted to the fullest extent of the law. Unless otherwise stated the results shown in this test report refer only to the sample(s) tested and such sample(s) are retained for 30 days only.
Attention: To check the authenticity of testing /inspection report & certificate, please contact us at telephone: (86-755) 8307 1443, or email: CN.Doccheck@sgs.com
No.198, Kezhu Road, Science City, Economic & Technological Development Area, Guangzhou, Guangdong, China 510663 t (86-20) 82155555 www.sgsgroup.com.cn
中国・广东・广州高新技术产业开发区科学城科珠路198号 邮编：510663 t (86-20) 82155555 sgs.china@sgs.com

4.2.2 Period

Non-Occupancy Period_802.11ac(VHT20)_2C_5500MHz

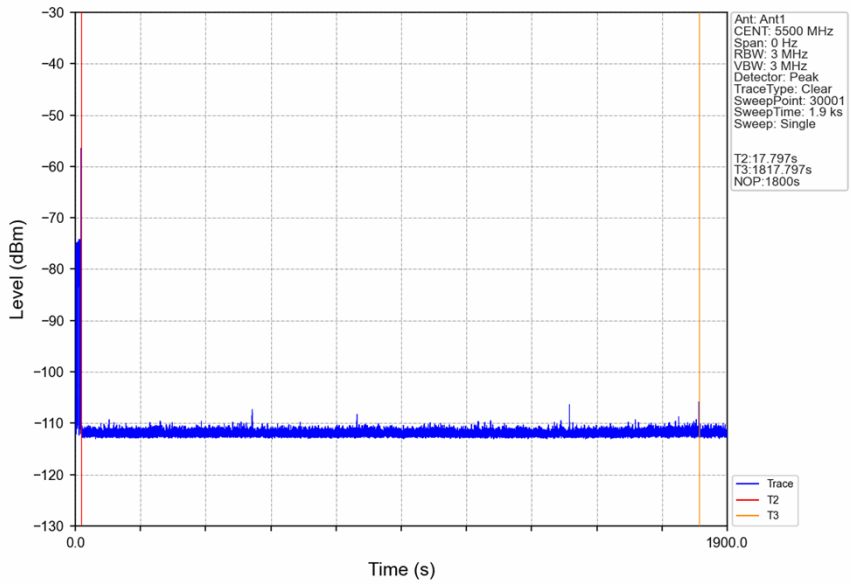

- End of the Report -

Unless otherwise agreed in writing, this document is issued by the Company subject to its General Conditions of Service printed overleaf, available on request or accessible at https://www.sgs.com/en/Terms-and-Conditions. Attention is drawn to the limitation of liability, indemnification and jurisdiction issues defined therein. Any holder of this document is advised that information contained hereon reflects the Company's findings at the time of its intervention only and within the limits of Client's instructions, if any. The Company's sole responsibility is to its Client and this document does not exonerate parties to a transaction from exercising all their rights and obligations under the transaction documents. This document cannot be reproduced except in full, without prior written approval of the Company. Any unauthorized alteration, forgery or falsification of the content or appearance of this document is unlawful and offenders may be prosecuted to the fullest extent of the law. Unless otherwise stated the results shown in this test report refer only to the sample(s) tested and such sample(s) are retained for 30 days only.
Attention: To check the authenticity of testing /inspection report & certificate, please contact us at telephone: (86-755) 8307 1443, or email: CN.Doccheck@sgs.com
SGS-CSTC Standards Technical Services Co., Ltd. Guangzhou Branch EMC Laboratory
No.198, Kezhu Road, Science City, Economic & Technological Development Area, Guangzhou, Guangdong, China 510663 t (86-20) 82155555 www.sgsgroup.com.cn
中国・广东・广州高新技术产业开发区科学城科珠路198号 邮编：510663 t (86-20) 82155555 sgs.china@sgs.com
Member of the SGS Group (SGS SA)