Notes

- Do not press the cassette compartment down. Doing so may cause malfunction.
- Be sure to turn the grip to the cassette inserting/ejecting position. Otherwise, the cassette cannot be inserted or ejected.

To prevent accidental erasure

Slide the write-protect tab on the cassette to expose the red mark.

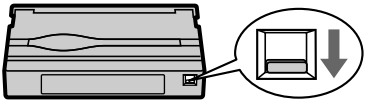

Label

Labels may cause a malfunction of the camcorder. Therefore, be sure not to:

- Stick on any labels than the one supplied.
- Stick the label onto any part of the cassette other than the label position **[a]**.

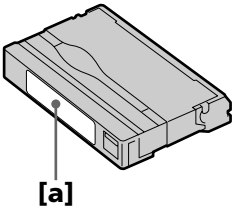

Step 4 Using the touch panel

Your camcorder has operation buttons on the LCD screen. Press the LCD screen with your finger or the supplied stylus (DCR-IP55 only) to operate each function. This section describes how to operate the touch panel during recording or playing back images on a tape.

(1) Prepare the power source (p. 17 to 21).
(2) Slide OPEN in the direction of the ▶ mark indicated on the camcorder to open the LCD panel.
(3) Set the POWER switch to CAMERA, MEMORY/NETWORK(DCR-IP55 only) or VCR.
(4) Press FN to display PAGE1. The operation buttons of PAGE1 appear on the LCD screen.
(5) Press PAGE2 to go to PAGE2. The operation buttons of PAGE2 appear on the LCD screen.
(6) Press PAGE3 to go to PAGE3. The operation buttons of PAGE3 appear on the LCD screen.
(7) Press a desired operation item. See relevant pages of this manual for each function.

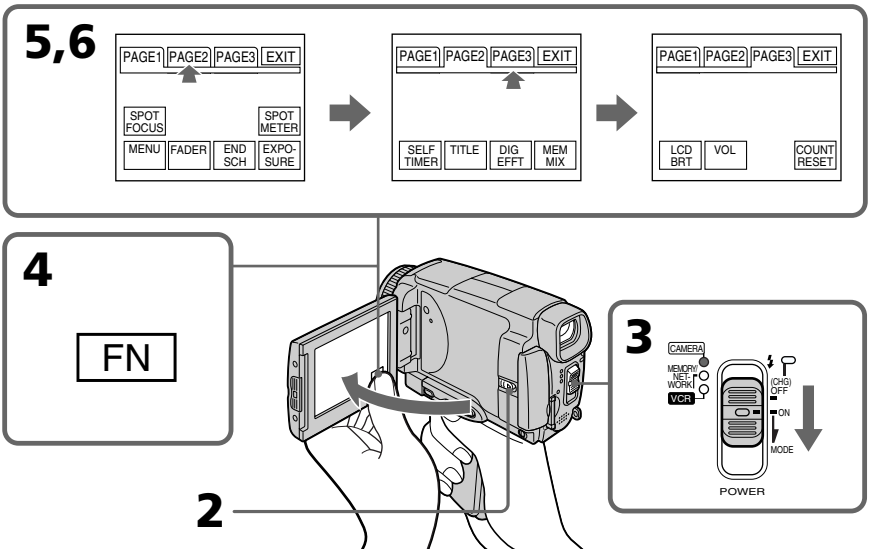

To return to FN
Press EXIT.

To execute settings
Press EXEC or ⮐ OK. The display returns to PAGE1, 2 or 3.

To cancel settings
Press ⮐ OFF. The display returns to PAGE1, 2 or 3.

Notes

- When using the touch panel, press the LCD screen lightly with your thumb, the supplied stylus (DCR-IP55 only) or index finger supporting the LCD screen from the back side of it.
- Do not press the LCD screen with sharp objects other than the stylus supplied (DCR-IP55 only).
- Do not press the LCD screen too hard.
- Do not touch the LCD screen with wet hands.
- If FN is not on the LCD screen, touch the LCD screen lightly to make it appear. You can make the display appear and disappear with DSPL/TOUCH PANEL on your camcorder.
- When the operation buttons do not work even if you press them, an adjustment is required (CALIBRATION) (p. 203).
- When the LCD screen gets dirty, use the supplied cleaning cloth.

When executing each item

The green bar appears above the item.

If an item is not available

The color of the items changes to grey.

Touch panel

You can operate with the touch panel using the viewfinder (p. 73).

Press FN to display the following buttons:

In CAMERA mode

PAGE1	SPOT FOCUS, MENU, FADER, END SCH, EXPOSURE, SPOT METER
PAGE2	SELF TIMER, TITLE, DIG EFFT, MEM MIX
PAGE3	LCD BRT, VOL, COUNT RESET

In VCR mode

PAGE1	MENU, VOL, TITLE, MULTI SCH
PAGE2	LCD BRT, DIG EFFT, PB ZOOM, END SCH
PAGE3	DATA CODE, COUNT RESET, REC CTRL

See page 107 when you set the POWER switch to MEMORY/NETWORK (DCR-IP55 only).

Recording a picture

Your camcorder automatically focuses for you.

(1) Remove the lens cap by pressing both knobs on its sides.
(2) Install the power source and insert a cassette. See “Step 1” to “Step 3” (p. 17 to 26) for more information.
(3) Turn the grip to the recording position, and hold your camcorder through the wrist strap. See “Quick Start Guide” (p. 10) for more information.
(4) Set the POWER switch to CAMERA. Your camcorder is set to the recording standby mode.
(5) Swing the LCD panel in the direction of the arrow indicated in the illustration below to open it.
(6) Press START/STOP. Your camcorder starts recording. The REC indicator appears. The camera recording lamp located on the front of your camcorder lights up. To stop recording, press START/STOP again.

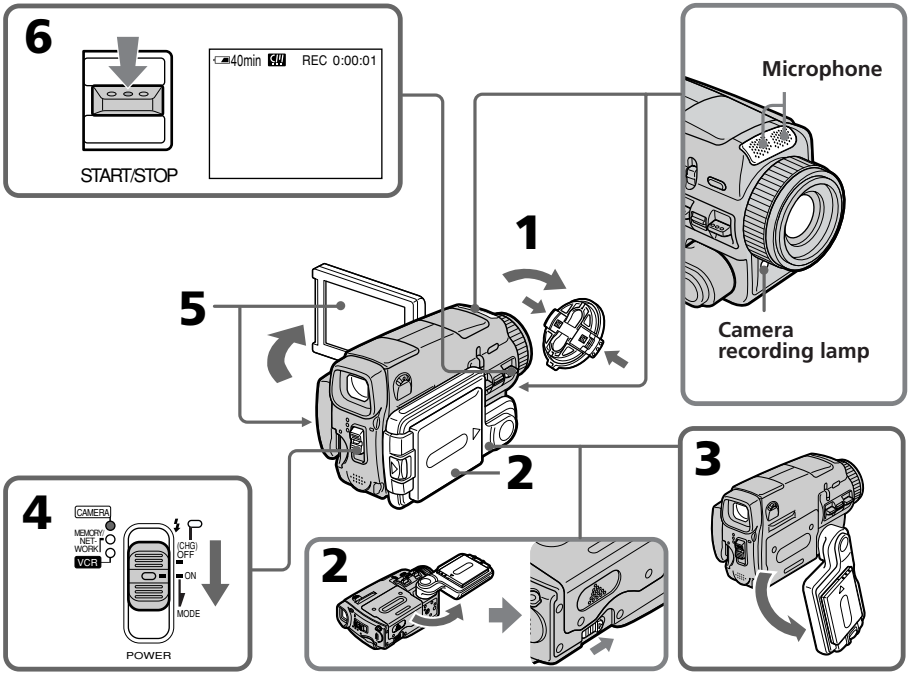

After recording

(1) Set the POWER switch to OFF (CHG).
(2) Close the LCD panel, then turn the grip to the cassette inserting/ejecting position.
(3) Eject the cassette.
(4) Turn the grip to the storing position.
(5) Remove the power source.

Note
Do not touch the built-in microphone during recording.

To enable transition
Transition between the last scene you recorded and the next scene can be performed as long as you do not eject the cassette even if you turn off your camcorder. When you want to change the battery pack, be sure to set the POWER switch to OFF (CHG). It does not affect transition.

Note
The recording data (date/time or various settings when recorded) are not displayed while recording. However, they are recorded automatically onto the tape. To display the recording data, press DATA CODE during playback. You can also use the Remote Commander for this operation (p. 43).

If you leave your camcorder in the standby mode for five minutes while the cassette is inserted
Your camcorder automatically turns off. This is to save battery power and to prevent battery and tape wear. To resume the standby mode, set the POWER switch to OFF (CHG), and to ON again. However, your camcorder does not turn off automatically while the cassette is not inserted.

The battery life when you record using the LCD screen
The battery time is slightly shorter than the shooting time using the viewfinder.

Adjusting the LCD screen

The LCD panel turns about 90 degrees to the viewfinder side and about 180 degrees to the lens side.

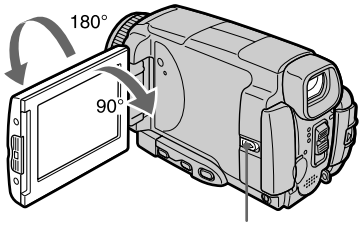

Slide OPEN to open the LCD panel.

When closing the LCD panel, set it vertically, and hold it into the camcorder body.

Note
When using the LCD screen except in the mirror mode (p. 35), the viewfinder automatically turns off.

When you use the LCD screen outdoors in direct sunlight
The LCD screen may be difficult to see. If this happens, we recommend that you use the viewfinder.

When you adjust the angle of the LCD panel
Make sure the LCD panel is opened up to 90 degrees.

Adjusting the brightness of the LCD screen

(1) Set the POWER switch to CAMERA. Press FN and select PAGE3 (p. 27).
You can also adjust the brightness of the LCD screen in the following operations.
- Set the POWER switch to VCR. Press FN and select PAGE2.
- Set the POWER switch to MEMORY/NETWORK (DCR-IP55 only). Press FN and select PAGE3.

(2) Press LCD BRT. The screen to adjust the brightness of the LCD screen appears.
(3) Adjust the brightness of the LCD screen using –/+.
– : to dim
+ : to brighten
(4) Press ↩ OK. The display returns to PAGE3.

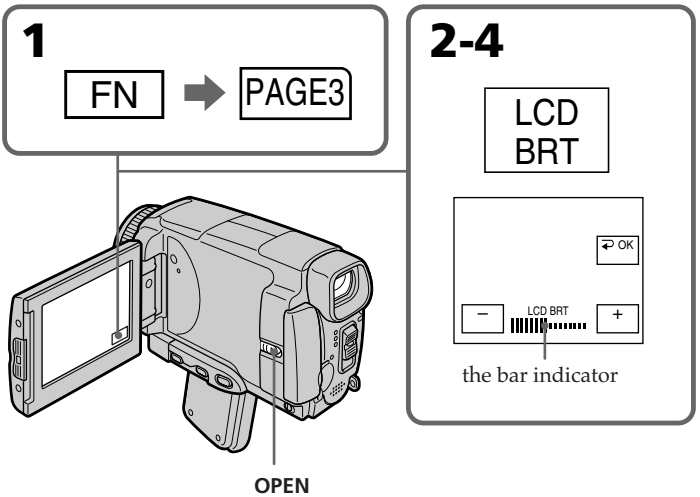

To return to FN
Press EXIT.

The color of the LCD screen
You can adjust it using the LCD COLOR item in the menu settings (p. 177).

Even if you adjust the LCD screen using LCD BRT, LCD COLOR, or the LCD screen backlight
The recorded picture will not be affected.

The setting of the LCD BACKLIGHT switch
Normally, set it to ON. When you use the camcorder in bright conditions using the battery pack, set it to OFF. This position saves battery power.

Adjusting the viewfinder

If you record pictures with the LCD panel closed, check the picture with the viewfinder. Adjust the viewfinder lens to your eyesight so that the indicators in the viewfinder come into sharp focus.

Adjust with the viewfinder lens adjustment lever.

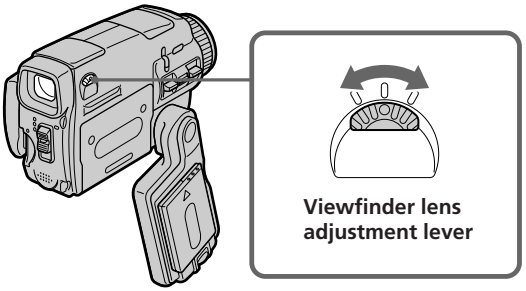

You can turn the LCD panel over and move it back to your camcorder body with the LCD screen facing out. You can operate with the touch panel through the viewfinder in CAMERA or MEMORY/NETWORK (DCR-IP55 only) mode (p. 73).

Viewfinder backlight
You can change the brightness of the backlight.
Select VF B.L. in the menu settings when using the battery pack (p. 177).

Even if you adjust the viewfinder backlight
The recorded picture will not be affected.

Using the zoom feature

Move the power zoom lever a little for a slower zoom. Move it further for a faster zoom.
"T" side: for telephoto (subject appears closer)
"W" side: for wide-angle (subject appears further away)

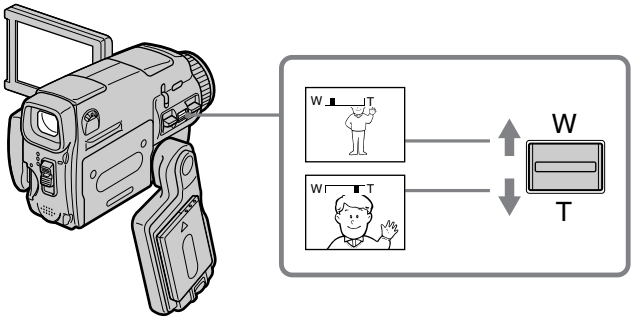

Using the zoom function sparingly results in better-looking recordings.

To zoom greater than 10×
Zoom greater than 10× is performed digitally. To activate the digital zoom, select the digital zoom power in D ZOOM in the menu settings. The digital zoom function is set to OFF in the default setting (p. 176).

The right side of the bar shows the digital zooming zone.
The digital zooming zone appears when you select the digital zoom power in the menu settings.

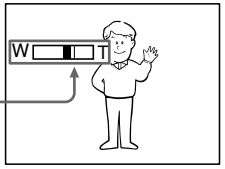

When you shoot close to a subject
If you cannot get a sharp focus, move the power zoom lever to the "W" side until the focus is sharp. You can shoot a subject that is at least about 80 cm (about 2 feet 5/8 inch) away from the lens surface in the telephoto position, or about 1 cm (about 1/2 inch) away in the wide-angle position.

Digital zoom
- Digital zoom starts to function when zoom exceeds 10×. Up to 20x or 120x zoom is performed digitally.
- The picture quality deteriorates as you move the power zoom lever toward the "T" side.

When the POWER switch is set to MEMORY/NETWORK (DCR-IP55 only)
You cannot use the digital zoom.

Shooting with the mirror mode

This feature allows the camera subject to view him or herself on the LCD screen. The subject can see his or her own image on the LCD screen while you look at the subject in the viewfinder.

Set the POWER switch to CAMERA or MEMORY/NETWORK (DCR-IP55 only) and rotate the LCD screen 180 degrees.

The ☺ indicator appears in the viewfinder and on the LCD screen.
❚❚● appears in the standby mode, and ● appears in the recording mode. Some other indicators appear mirror-reversed and others are not displayed.

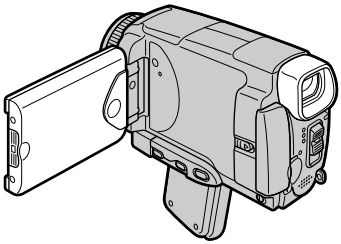

Picture in the mirror mode
The picture on the LCD screen is a mirror-image. However, the picture will be normal when recorded.

During recording in the mirror mode
FN appears mirror-reversed in the viewfinder.

When you press FN
The ☺ indicator does not appear on the LCD screen.

Indicators displayed in the recording mode

The indicators are not recorded on the tape.

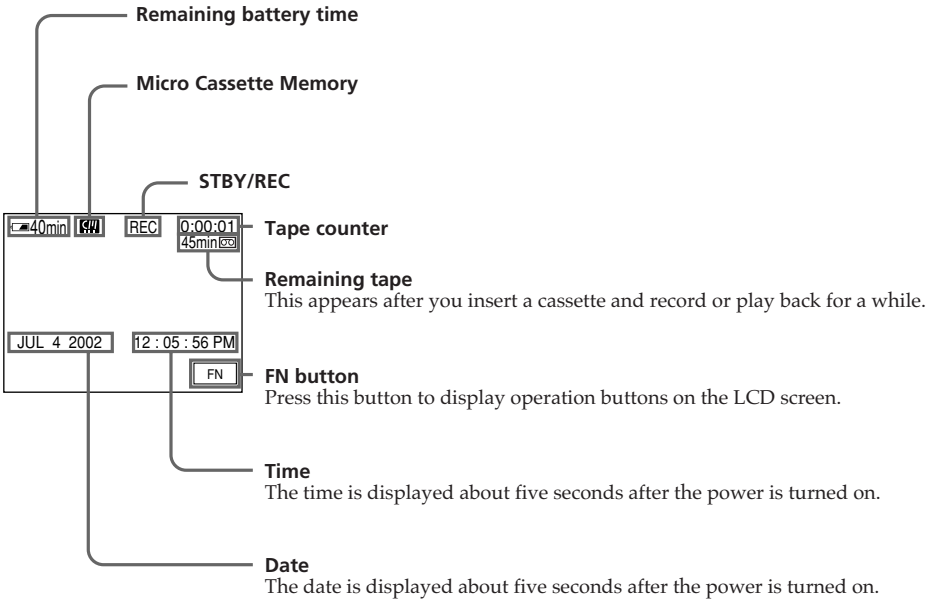

Remaining battery time indicator during recording
The remaining battery time indicator shows the approximate recording time. The indicator may not be correct, depending on the conditions in which you are recording. When you close the LCD panel and open it again, it takes about one minute for the correct remaining battery time in minutes to be displayed.

Tape counter
The tape counter can be reset using COUNT RESET in the PAGE3 screen.

Remaining tape indicator
The indicator may not be displayed accurately depending on the tape.

Recording data
The recording data (date/time or various settings when recorded) are not displayed while recording. However, they are recorded automatically on the tape. To display the recording data, press DATA CODE on the Remote Commander during playback. You can also operate in the PAGE3 screen during playback (p. 43).

Shooting a backlit subject – BACK LIGHT

When you shoot a subject with the light source behind the subject or a subject with a light background, use the backlight function.

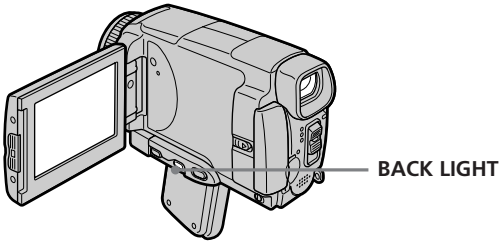

Set the POWER switch to CAMERA or MEMORY/NETWORK (DCR-IP55 only) and press BACK LIGHT.
The indicator appears on the LCD screen.
To cancel, press BACK LIGHT again.

During back light function
The backlight function will be canceled when you press MANUAL in the EXPOSURE mode (p. 68) or SPOT METER (p. 69).

Shooting in the dark – NightShot/Super NightShot/Color Slow Shutter

Using NightShot

NightShot enables you to shoot a subject in a dark place. For example, you can satisfactorily record the environment of nocturnal animals for observation when you use this function.

Set the POWER switch to CAMERA or MEMORY/NETWORK (DCR-IP55 only) and set NIGHTSHOT to ON.
and "NIGHTSHOT" indicators flash on the LCD screen. To cancel NightShot, set NIGHTSHOT to OFF.

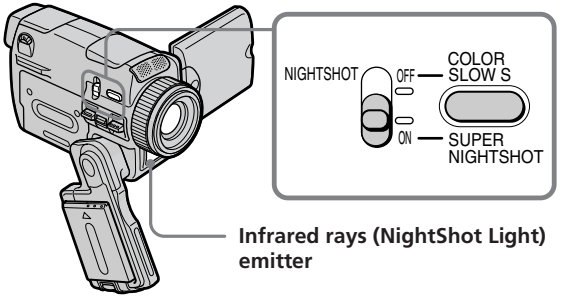

Using Super NightShot

Super NightShot makes subjects more than 16 times brighter than those recorded in NightShot.

(1) Set the POWER switch to CAMERA.
(2) Set NIGHTSHOT to ON. The and "NIGHTSHOT" indicators flash on the LCD screen.
(3) Press SUPER NIGHTSHOT.
The S and "SUPER NIGHTSHOT" indicators flash on the LCD screen.
To cancel Super NightShot, press SUPER NIGHTSHOT again.

Using the NightShot Light

The picture will be clearer with the NightShot Light on. To activate NightShot Light, set N.S.LIGHT to ON in the menu settings (The default setting is ON) (p. 175).

Using Color Slow Shutter

Color Slow Shutter enables you to record color images in a dark place.

(1) Set the POWER switch to CAMERA.
(2) Set NIGHTSHOT to OFF.
(3) Press COLOR SLOW S.
The and COLOR SLOW SHUTTER indicators flash on the LCD screen.
To cancel the Color Slow Shutter function, press COLOR SLOW S again.

Notes

- Do not use the NightShot function in bright places (ex. outdoors in the daytime). This may cause your camcorder to malfunction.
- When you keep NIGHTSHOT set to ON in normal recording, the picture may be recorded in incorrect or unnatural colors.
- If focusing is difficult with the autofocus mode when using the NightShot function, focus manually.
- Do not cover the NightShot Light emitter when using the NightShot function.

While using NightShot, you cannot use the following functions:

– Exposure
– Flexible Spot Meter
– PROGRAM AE
– White balance
– HOLOGRAM AF

While using Super NightShot, you cannot use the following functions:

– Fader
– Exposure
– Digital effect
– PROGRAM AE
– Recording still images
– White balance
– Flexible Spot Meter
– HOLOGRAM AF
– Recording with the flash

While using the Color Slow Shutter function, you cannot use the following functions:

– Fader
– Exposure
– Digital effect
– PROGRAM AE
– Recording still images
– Flexble Spot Meter
– HOLOGRAM AF
– Recording with the flash

While using Super NightShot or Color Slow Shutter

The shutter speed will be automatically adjusted depending on the brightness of the background. The motion of the moving picture may slow down.

When the POWER switch is set to MEMORY/NETWORK (DCR-IP55 only)

You cannot use following functions:
– Super NightShot function
– Color Slow Shutter

NightShot Light

NightShot Light rays are infrared and so are invisible. The maximum shooting distance using the NightShot Light is about three meters (10 feet).

In dark places

Color slow shutter may not work properly.

Self-timer recording

Recording automatically starts in 10 seconds after you set the self-timer. You can also use the Remote Commander for this operation.

(1) In the standby mode, press FN and select PAGE2 (p. 27).
(2) Press SELFTIMER.
The ⏲ (self-timer) indicator appears on the LCD screen.
(3) Press START/STOP.
The self-timer starts counting down from 10 with a beep sound. In the last two seconds of the countdown, the beep sound gets faster, then recording starts automatically.

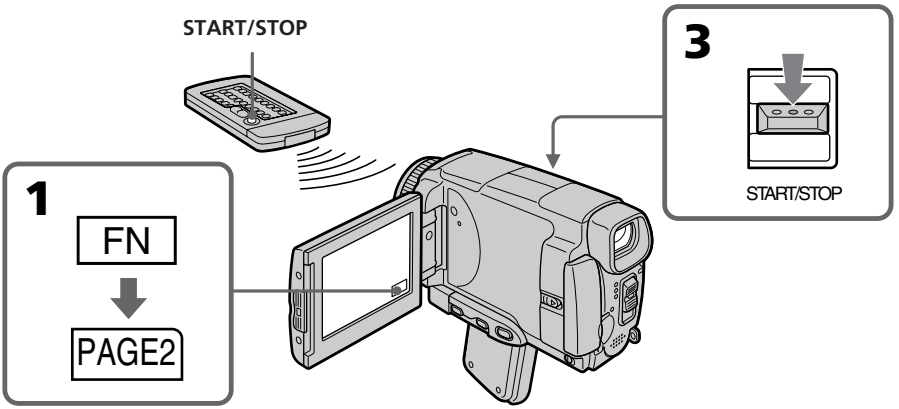

To stop the countdown

Press START/STOP.
To restart the countdown, press START/STOP again.

To cancel self-timer recording

Press SELFTIMER so that the ⏲ (self-timer) indicator disappears from the LCD screen while your camcorder is in the standby mode. You cannot cancel self-timer recording using the Remote Commander.

Note
The self-timer recording mode is automatically canceled when:
– Self-timer recording is finished.
– The POWER switch is set to OFF (CHG) or VCR.

When the POWER switch is set to MEMORY/NETWORK (DCR-IP55 only)
You can also record still images on the "Memory Stick" with the self-timer (p. 121).

Checking the recording– END SEARCH

You can go to the end of the recorded section after you record. It is convenient when you make the transition between the last recorded scene and the next scene you record smooth.

(1) In the standby mode, press FN to display PAGE1 (p. 27).
(2) Press END SCH.
The last five seconds of the recorded section are played back and your camcorder returns to the standby mode. You can monitor the sound from the speaker.

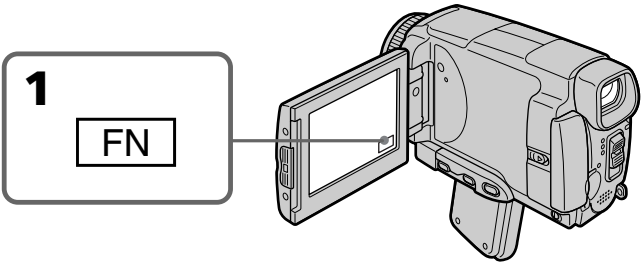

To return to FN
Press EXIT.

To stop searching
Press END SCH again.

Even once you eject the cassette
The end search function works.

Playing back a tape

You can monitor the recorded tape etc. on the LCD screen. If you close the LCD panel, you can monitor the playback picture in the viewfinder. You can also control playback using the Remote Commander.

(1) Prepare the power source and insert the recorded tape.
(2) Set the POWER switch to VCR.
(3) Slide OPEN in the direction of the ▶ mark to open the LCD panel.
(4) Press ◀◀ to rewind the tape.
(5) Press ▶ II to start playback.
(6) Adjust the volume following the steps below.
① Press FN to display PAGE1 (p. 27).
② Press VOL. The screen for the volume adjustment appears.
③ Press –/+ to adjust the volume.
– : to decrease the volume.
+ : to increase the volume.
(7) Press ↩ OK. The display returns to PAGE1.

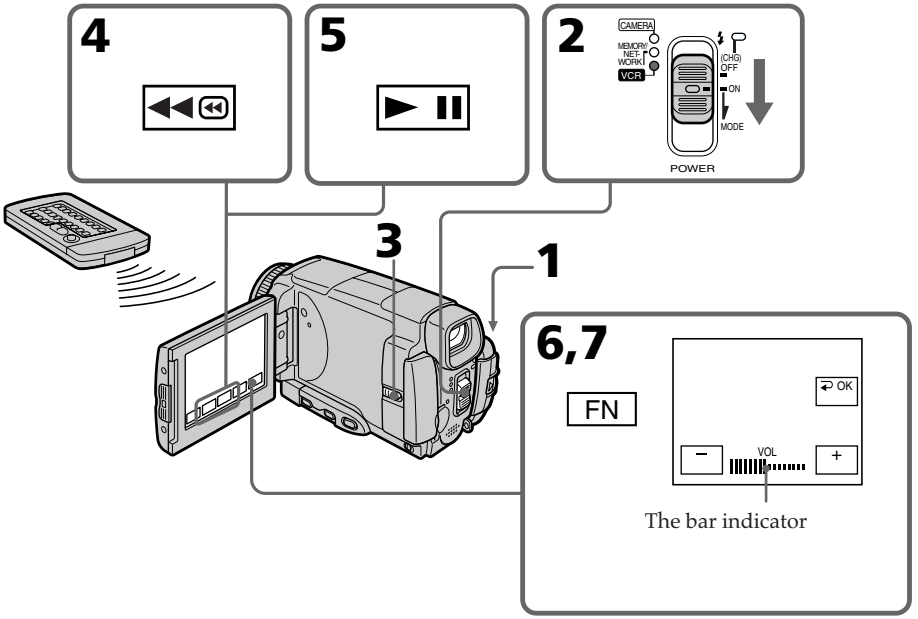

To return to FN

Press EXIT.

To stop playback

Press ■ on the LCD screen or STOP on the Remote Commander.

When monitoring on the LCD screen
You can turn the LCD panel over and move it back to the camcorder body with the LCD screen facing out.

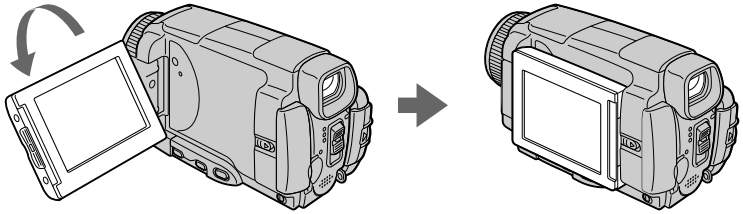

If you leave the power on for a long time
Your camcorder gets warm. This is not a malfunction.

When you open or close the LCD panel
Make sure that the LCD panel is set vertically.

To display the screen indicators – Display function

Press DSPL/TOUCH PANEL on your camcorder or DISPLAY on the Remote Commander.
The indicators disappear from the LCD screen.
To make the indicators appear, press DSPL/TOUCH PANEL or DISPLAY again.

Using the data code function

Your camcorder automatically records not only images on the tape but also the recording data (date/time or various settings when recorded) **(Data code)**.
Follow the steps below to display the data code using the touch panel or the Remote Commander.

Using the touch panel
(1) In the playback mode, press FN and select PAGE3.
(2) Press DATA CODE.

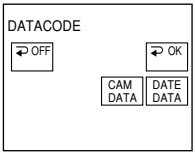

(3) Select CAM DATA or DATE DATA, then press ↩ OK.
(4) Press EXIT.

Using the Remote Commander

Press DATA CODE on the Remote Commander in the playback mode.
The display changes as follows:
date/time → various settings (SteadyShot OFF, exposure, white balance, gain, shutter speed, aperture value) → no indicator

Not to display various settings

Set DATA CODE to DATE in the menu settings (p. 182).
The display changes as follows when you press DATA CODE on the Remote Commander: date/time ↔ no indicator

Date/time **Various settings**

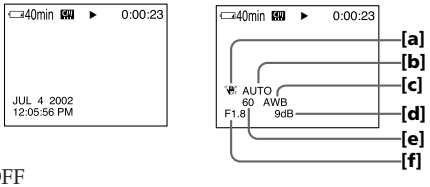

[a] SteadyShot OFF
[b] Exposure mode
[c] White balance
[d] Gain
[e] Shutter speed
[f] Aperture value

Various settings

Various settings shows the camcorder's recording information at the time of recording. In the recording mode, the various settings will not be displayed.

When you use the data code function, bars (-- -- --) appear if:

– A blank portion of the tape is being played back.
– The tape is unreadable due to tape damage or noise.
– The tape was recorded by a camcorder without the date and time set.

Data code

When you connect your camcorder to a TV, the data code also appears on the TV screen.

Remaining battery time indicator during playback

The indicator shows the approximate continuous playback time. The indicator may not be correct, depending on the conditions in which you are playing back. When you close the LCD panel and open it again, it takes about one minute for the correct remaining battery time to be displayed.

Various playback modes

To operate video control buttons, set the POWER switch to VCR.

To view a still image (playback pause)

- Press ►II during playback. To resume playback, press ►II again.
- Press PAUSE on the Remote Commander during playback. To resume normal playback, press PAUSE again.

To fastforward the tape

- Press ►►⊖ in stop mode. To resume normal playback, press ►II.
- Press FF on the Remote Commander in the stop mode. To resume normal playback, press PLAY.

To rewind the tape

- Press ◄◄⊖ in stop mode. To resume normal playback, press ►II.
- Press REW on the Remote Commander in stop mode. To resume normal playback, press PLAY.

To locate a scene monitoring the picture (picture search)

- Keep pressing ◄◄⊖ or ►►⊖ during playback. To resume normal playback, release the button.
- Keep pressing REW or FF on the Remote Commander during playback. To resume normal playback, release the button.

To monitor the high-speed picture while fastforwarding or rewinding the tape (skip scan)

- Keep pressing ◄◄⊖ while rewinding or ►►⊖ while advancing the tape. To resume rewinding or advancing, release the button.
- Keep pressing REW on the Remote Commander while rewinding the tape, or keep pressing FF on the Remote Commander while advancing the tape. To resume normal rewinding or advancing, release the button.

To view the picture at slow speed (slow playback)

Press SLOW on the Remote Commander during playback. To pause playback, press ►II or PAUSE on the Remote Commander. To resume normal playback, press ►II or PLAY on the Remote Commander again.

To search the last scene recorded (END SEARCH)

Press END SCH on PAGE2 in stop mode. The last five seconds of the recorded section are played back then the camcorder stops.

Video control buttons on the LCD screen

- ►II To play back or pause a tape
- ■ To stop a tape
- ◄◄ To rewind a tape
- ►► To fastforward a tape

When the playback pause mode lasts for five minutes

Your camcorder automatically enters the stop mode. To resume playback, press ►II or PLAY on the Remote Commander.

Viewing the recording on TV

Connect your camcorder to your TV with the A/V connecting cable supplied with your camcorder to watch the playback pictures on the TV screen. You can operate the playback control buttons in the same way as when you view playback pictures on the LCD screen. When viewing the playback picture on the TV screen, we recommend that you power your camcorder from a wall outlet using the AC adaptor (p. 20). Refer to the operating instructions of your TV.

Open the jack cover. Connect your camcorder to the TV with the A/V connecting cable. Then, set the TV/VCR selector on the TV to VCR.
The supplied A/V connecting cable is equipped with an S video plug and a video plug. Use either the S video plug or the video plug depending on the TV. Do not connect both of the plugs to the TV.

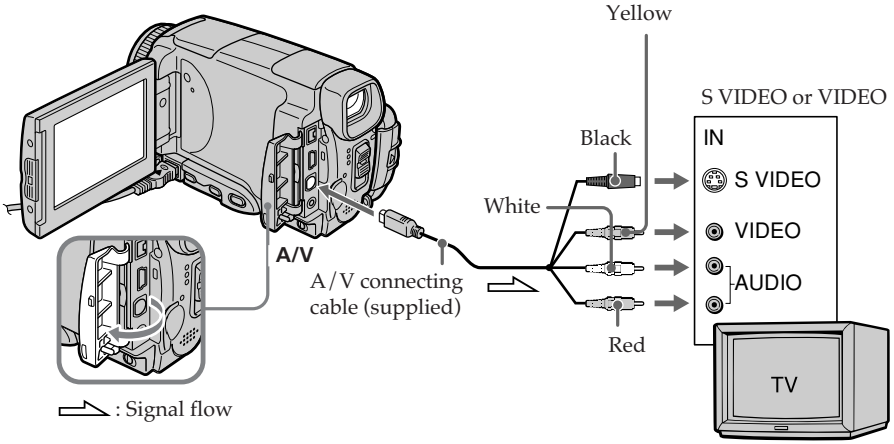

If your TV is already connected to the VCR

Connect your camcorder to the LINE IN input on the VCR with the A/V connecting cable supplied with your camcorder. Set the input selector on the VCR to LINE.

If your TV or VCR is a monaural type

Connect the yellow plug of the A/V connecting cable to the video input jack and the white or red plug to the audio input jack on the VCR or the TV. If you connect the white plug, the sound is an L (left) signal. If you connect the red plug, the sound is an R (right) signal.

If your TV has an S video jack
Connect using the S video plug to faithfully obtain original pictures. With this connection, you do not need to connect the yellow (video) plug of the A/V connecting cable. Connect the S video plug to the S video jack on the TV or VCR. This connection produces higher quality MICROMV format pictures.

To display the screen indicators on TV
Set DISPLAY to V-OUT/LCD in the menu settings (p. 182).
Then press DSPL/TOUCH PANEL. To turn off the screen indicators, press DSPL/TOUCH PANEL again.

Recording still images in CAMERA mode

You can record still images on a "Memory Stick" in CAMERA mode.

Before operation
Insert a "Memory Stick" into your camcorder.

(1) Set the POWER switch to CAMERA.
(2) Keep pressing PHOTO lightly until a still image appears.
The CAPTURE indicator appears. Recording does not start yet. To change the still image, release PHOTO, select a still image again, and then press and hold PHOTO lightly.
(3) Press PHOTO deeper.
The still image will be displayed.
Recording is complete when the bar scroll indicator disappears.
The image when you pressed PHOTO deeper will be recorded on the "Memory Stick."

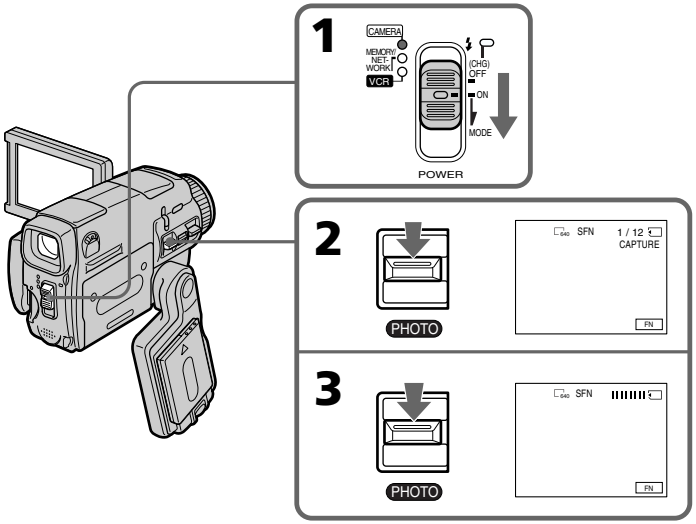

"Memory Stick"
For details, see page 103 for more information.

Image size of still images
Image size is automatically set to 640 × 480.
When you want to record still images in different sizes, use the Memory Photo recording function (p. 114).

When POWER switch is set to CAMERA
You cannot select image quality mode.
The image quality mode you last selected is used. (The default setting is SUPER FINE).
For details, see page 178 for more information.

Notes
• Do not shake or strike your camcorder when you record still images.
  The image may fluctuate.
• You cannot record still images on a "Memory Stick" during following operations
  (⊘ flashes.):
– Wide mode
– Fader
– Picture effect
– Digital effect
– Super NightShot
– Color Slow Shutter
– END SEARCH
– MEMORY MIX

During and after recording still images on a "Memory Stick"
Your camcorder continues recording on tape.

When you press PHOTO on the Remote Commander to record still images
The image when you press PHOTO will be recorded on the "Memory Stick"

To record still images on a "Memory Stick" during tape recording
You cannot check an image on the screen by pressing PHOTO lightly.

To record images with higher quality
We recommend you use the Memory Photo recording function (p. 114).

You cannot record a title.

Recording images with the flash

The flash pops up automatically. The default setting is auto (no indicator). To change the flash mode, press ϟ (flash) repeatedly until the flash mode indicator appears on the LCD screen.

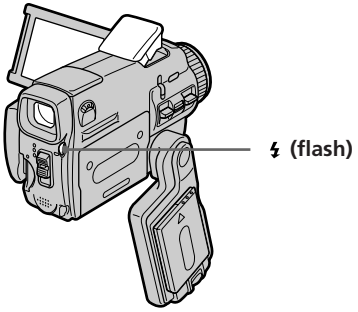

Each press of ϟ (flash) changes the indicator as follows:

👁 → ϟ → ⊛ → AUTO (No indicator)

👁 Auto red-eye reduction:	The flash fires before recording to reduce red-eye.
ϟ Forced flash:	The flash fires regardless of the surrounding brightness.
⊛ No flash:	The flash does not fire.

The amount of flash is automatically adjusted to the appropriate brightness. You can also change FLASH LVL to the desired brightness in the menu settings (p. 175). Try recording various images to find the most appropriate setting for FLASH LVL.

Notes

- The recommended shooting distance using the built-in flash is 0.3 m to 2.5 m (31/32 feet to 8 1/3 feet).
- Attaching the lens hood (optional) or a conversion lens (optional) may block the light from the flash or cause lens shadow to appear.
- Auto red-eye reduction (👁) may not produce the desired effect depending on individual differences, the distance to the subject, the subject not looking at the pre-recording flash or other conditions.
- The flash effect cannot be obtained easily when you use forced flash in a bright location.
- When recording with the flash, it takes longer to prepare for image capture. This is because your camcorder starts to charge power for firing after the flash pops up. Darken the surroundings by covering the lens, and press PHOTO lightly so that your camcorder starts to charge power after the flash pops up.
- The flash CHG lamp flashes while the power for firing is being charged. After charging is completed, the flash CHG lamp lights up.
- If it is not easy to focus on the subject automatically, for example, when recording in the dark, use the focal distance information (p. 71) for focusing manually.

If you leave your camcorder for five or more minutes after disconnecting the power source
Your camcorder returns to the default setting (auto).

You cannot shoot images with the flash during the following operations:
– Wide mode
– Fader
– Digital effect
– Picture effect
– Super NightShot
– Colour Slow Shutter
– END SEARCH
– MEMORY MIX
– Recording

The flash does not fire even if you select auto (no indicator) and 👁 (auto red-eye reduction) during the following operations:
– Exposure
– NightShot
– Spotlight of PROGRAM AE
– Sunset & moon of PROGRAM AE
– Landscape of PROGRAM AE
– Flexible Spot Meter

Self-timer recording

You can record still images with the self-timer. You can also use the Remote Commander for this operation.

Before operation
Insert a "Memory Stick" into your camcorder.

(1) In the recording standby mode, press FN and select PAGE2.
(2) Press SELFTIMER.
The ⏲ (self-timer) indicator appears on the LCD screen.
(3) Press PHOTO deeper.
The self-timer starts counting down from 10 with a beep. In the last two seconds of the countdown, the beep gets faster, then the recording starts automatically.

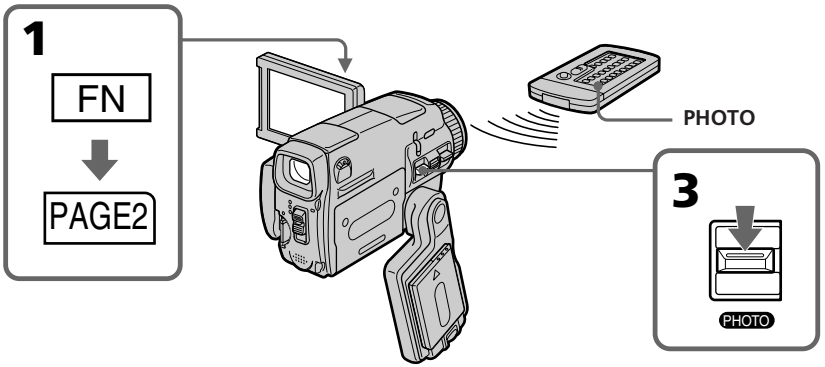

To cancel self-timer recording

Press SELFTIMER so that the ⏲ (self-timer) indicator disappears from the LCD screen while your camcorder is in the standby mode. You cannot cancel the self-timer recording using the Remote Commander.

Note
The self-timer recording mode is automatically canceled when:
– Self-timer recording is finished.
– The POWER switch is set to OFF (CHG) or VCR.

During recording to the tape
You cannot use self-timer recording.

Adjusting the white balance manually

You can manually adjust and set the white balance. This adjustment makes white subjects look white and allows more natural color balance. Normally white balance is automatically adjusted.

(1) Set the POWER switch to CAMERA or MEMORY/NETWORK (DCR-IP55 only) .
(2) Press FN to display PAGE1.
(3) Press MENU, then select WHT BAL in M in the menu settings to select a desired white balance mode (p. 175).

HOLD : Recording a single-colored subject or background

☀ (OUTDOOR) :
- Recording a sunset/sunrise, just after sunset, just before sunrise, neon signs, or fireworks
- Under a color matching fluorescent lamp

(INDOOR) :
- When lighting conditions change quickly
- In too bright places such as photography studios
- Under sodium lamps or mercury lamps

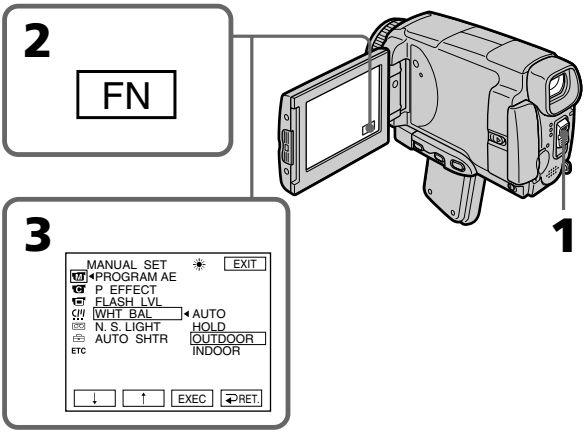

To return to FN

Press EXIT.

To return to the automatic white balance mode

Set WHT BAL to AUTO in the menu settings.

If the picture is being taken in a studio lit by TV lighting

We recommend that you record in (INDOOR).

When you record under fluorescent lighting

Select AUTO or HOLD.
Your camcorder may not adjust the white balance correctly in (INDOOR) mode.

In AUTO mode

Point your camcorder at the white subject for about 10 seconds after setting the POWER switch to CAMERA to get better adjustment when:
– You detach the battery for replacement.
– You bring your camcorder from indoors to outdoors holding the exposure, or vice versa.

In HOLD mode

Set the white balance to AUTO and reset to HOLD after few seconds when:
– You change the PROGRAM AE mode.
– You bring your camcorder from indoors to outdoors, or vice versa.

Using the wide mode

You can record a 16:9 wide picture to watch on the 16:9 wide-screen TV (16:9WIDE). If you connect a TV compatible with the ID-1/ID-2 system, the screen size is automatically sellected.
Black bands appear on the LCD screen during recording in 16:9WIDE mode **[a].** The picture during playing back on a normal TV **[b]** or a wide -screen TV **[c]** are compressed in the widthwise direction. If you set the screen mode of the wide-screen TV to the full mode, you can watch pictures of normal images **[d].**

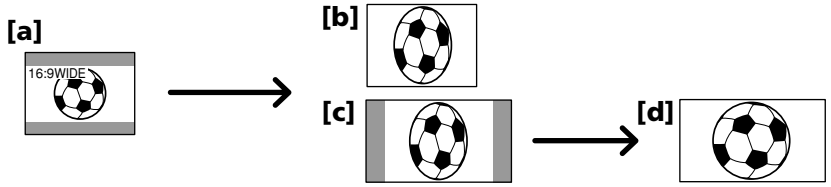

(1) Set the POWER switch to CAMERA.
(2) Press FN to display PAGE1.
(3) Press MENU, then set 16:9WIDE to ON in in the menu settings (p. 176).

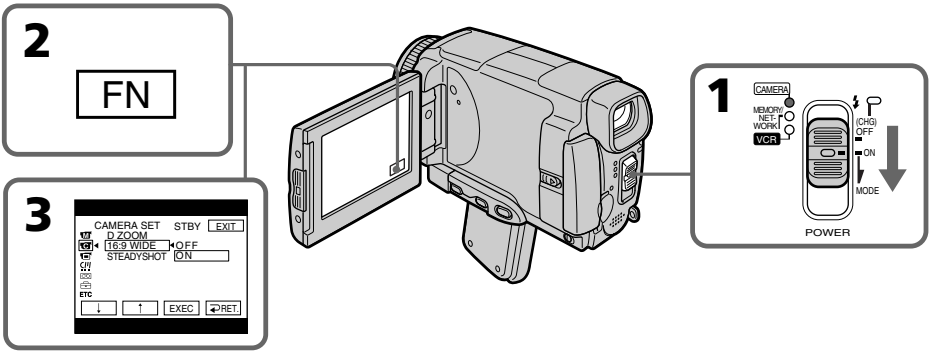

To return to FN
Press EXIT.

To cancel the wide mode
Set 16:9WIDE to OFF in the menu settings.

In the wide mode, you cannot select the following functions:
– Recording still images
– OLD MOVIE
– BOUNCE

During recording
You cannot select or cancel the wide mode. When you cancel the wide mode, set your camcorder to the recording standby mode and then set 16:9WIDE to OFF in the menu settings.

Connection for a TV
Pictures recorded in 16:9WIDE mode automatically appear on the TV screen at full size when:
– You connect your camcorder to a TV that is compatible with the video ID (ID-1/ID-2) system.
– You connect your camcorder to the S video jack on the TV.

ID-1 system
The ID-1 system sends aspect ratio (screen horizontal/vertical ratio) information (16:9, 4:3, or letter box) with video signals.

ID-2 system
The ID-2 system sends a copyright protection signal with ID-1 signals inserted between video signals when you connect your camcorder to other equipment using an A/V connecting cable.

Using the fader function

You can fade in or out to give your recording a professional appearance.

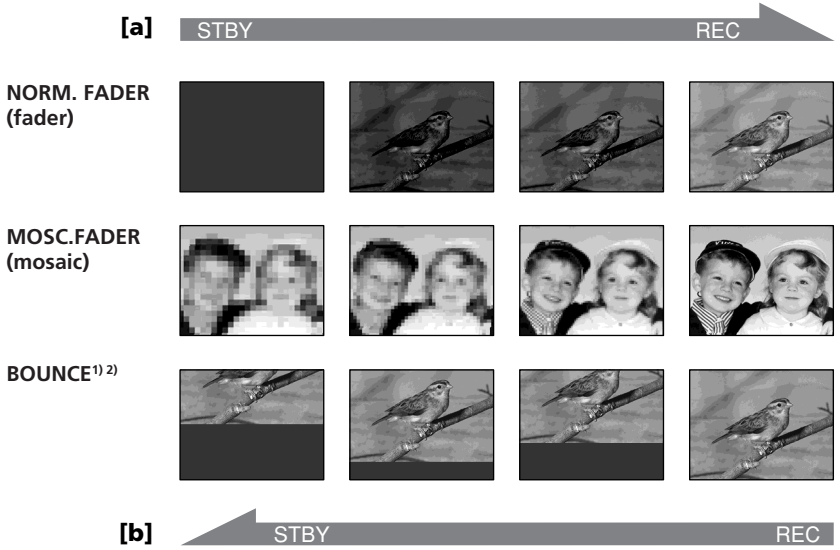

MONOTONE
When fading in, the picture gradually changes from black-and-white to color.
When fading out the picture gradually changes from color to black-and-white.

1) You can use the bounce function when D ZOOM is set to OFF in the menu settings.
2) Fade in only.

Using the fader function

(1) To fade in [a]
In the recording standby mode, press FN to display PAGE1.
To fade out [b]
In the recording mode, press FN to display PAGE1.
(2) Press FADER. The FADER screen appears.
(3) Select a desired fader mode.
(4) Press ↩ OK to return to PAGE1, and press EXIT to return to FN.
The fader indicator you selected flashes.
(5) Press START/STOP. The fader indicator stops flashing, then lights up.
After the fade in/out is carried out, the fader indicator goes off and your camcorder automatically returns to the normal mode.

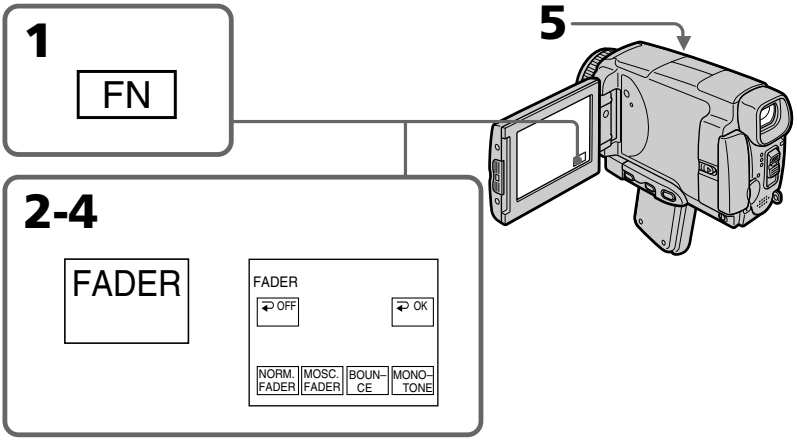

To cancel the fader function

Before pressing START/STOP, press ↩ OFF in step 2. The display returns to PAGE1.
Press EXIT to return to FN.

Note
You cannot use the following functions while using the fader function. Also, you cannot use the fader function while using the following functions:
– Digital effect
– Super NightShot
– Color Slow Shutter
– Recording still images

While using the BOUNCE function, you cannot use the following functions:
– Exposure
– Flexible Spot Meter
– Focus
– Zoom
– Picture effect

Note on the BOUNCE function
You cannot select the bounce function in the following mode or functions:
– D ZOOM is activated in the menu settings
– Wide mode
– Picture effect
– PROGRAM AE

When the POWER switch is set to MEMORY/NETWORK (DCR-IP55 only)
You cannnot use the fader function.

Using special effects – Picture effect

You can digitally process images to obtain special effects like those in films or on the TV.

NEG. ART [a] : The color and brightness of the picture are reversed.
SEPIA : The picture is sepia.
B&W : The picture is monochrome (black-and-white).
SOLARIZE [b] : The light intensity is clearer, and the picture looks like an illustration.
PASTEL [c] : The contrast of the picture is emphasized, and the picture looks like an animated cartoon.
MOSAIC [d] : The picture is mosaic.

[a] **[b]** **[c]** **[d]**

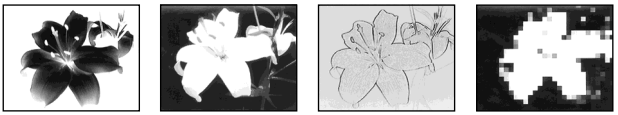

(1) Set the POWER switch to CAMERA.
(2) Press FN to display PAGE1.
(3) Press MENU, then select P EFFECT in M in the menu settings to select a desired picture effect mode (p. 175).

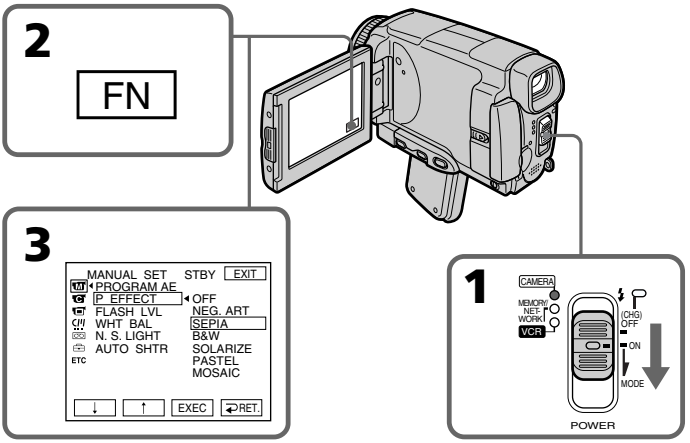

To return to FN
Press EXIT.

To turn the picture effect function off
Select OFF in P EFFECT in the menu settings.

While using the picture effect function, you cannot use following functions:
– OLD MOVIE
– BOUNCE
– Recording still images

When you set the POWER switch to OFF (CHG)
The picture effect is automatically canceled.

Using special effects – Digital effect

You can add special effects to recorded pictures using the various digital functions. The sound is recorded normally.

STILL
You can record a still image so that it is superimposed on a moving picture.

FLASH (FLASH MOTION)
You can record still images successively at regular intervals.

LUMI. (LUMINANCEKEY)
You can swap the brighter area in a still image with a moving picture.

TRAIL
You can record a picture so that an incidental image like a trail is left.

SLOW SHTR (SLOW SHUTTER)
You can slow down the shutter speed. The slow shutter mode is good for recording dark pictures more brightly.

OLD MOVIE
You can add an old movie type atmosphere to pictures. Your camcorder automatically sets the wide mode to ON, the picture effect to SEPIA, and the appropriate shutter speed.

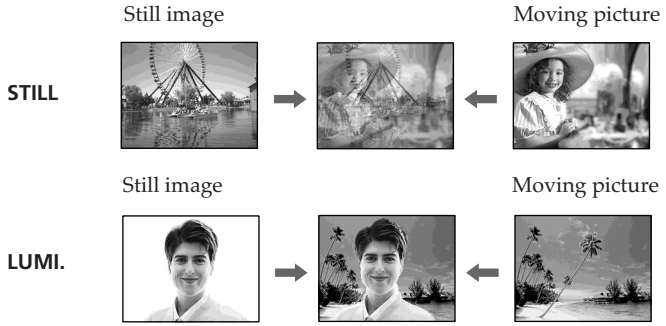

(1) Set the POWER switch to CAMERA.
(2) Press FN to display PAGE2.
(3) Press DIG EFFT. The DIG EFFTscreen appears.
(4) Press a desired digital effect mode. In the STILL and LUMI. modes, the still image is stored in memory.
(5) Press –/+ to adjust the effect.

Items to adjust

STILL	The rate of the still image you want to superimpose on the moving picture
FLASH	The interval of frame by frame playback
LUMI.	The color scheme of the area in the still image which is to be swapped with a moving picture
TRAIL	The vanishing time of the incidental image
SLOW SHTR	Shutter speed. The larger the shutter speed number, the slower the shutter speed.
OLD MOVIE	No adjustment necessary

(6) Press ↩ OK. The display returns to PAGE2.

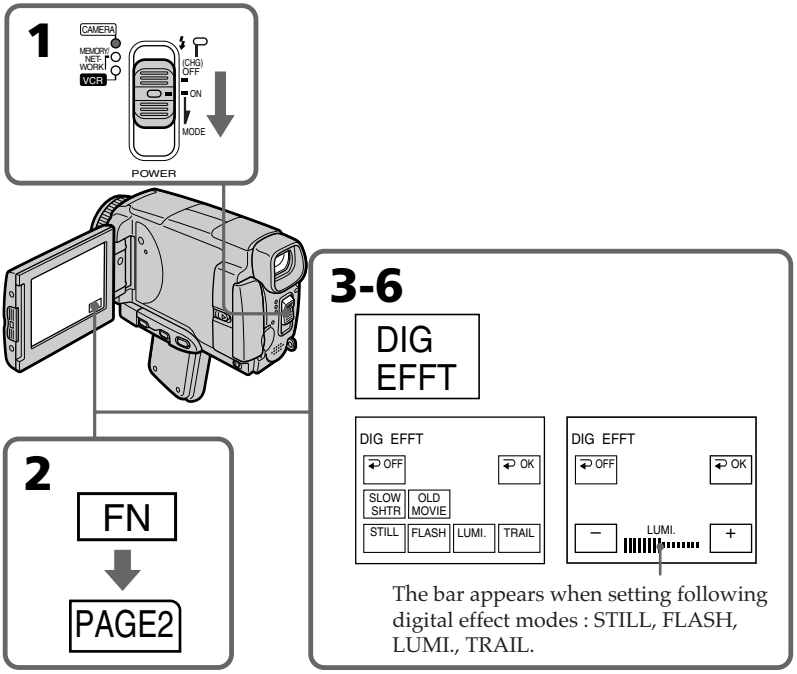

The bar appears when setting following digital effect modes : STILL, FLASH, LUMI., TRAIL.

To return to FN

Press EXIT.

To cancel the Digital effect

Press ↩ OFF. The display returns to PAGE2.

Notes

- The following functions do not work during digital effect:
  - Fader
  - Super NightShot
  - Color Slow Shutter
  - Recording still images
- The PROGRAM AE function does not work in the slow shutter mode.
- The following functions do not work in the OLD MOVIE mode:
  - Wide mode
  - Picture effect
  - PROGRAM AE

When you set the POWER switch to OFF (CHG)

The digital effect will be automatically canceled.

When recording in the slow shutter mode

Auto focus may not be effective. Focus manually using a tripod.

Shutter speed

Shutter speed number	Shutter speed
SLOW SHTR 1	1/30
SLOW SHTR 2	1/15
SLOW SHTR 3	1/8
SLOW SHTR 4	1/4

Using the PROGRAM AE

You can select PROGRAM AE (Auto Exposure) mode to suit your specific shooting requirements.

Spotlight
This mode prevents people's faces, for example, from appearing excessively white when shooting subjects lit by strong light in the theater.

Soft portrait
This mode brings out the subject while creating a soft background for subjects such as people or flowers.

Sports lesson
This mode minimizes shake on fast-moving subjects such as in tennis or golf.

Beach & ski
This mode prevents people's faces from appearing dark in strong light or reflected light, such as at a beach in midsummer or on a ski slope.

Sunset & moon
This mode allows you to maintain atmosphere when you are recording sunsets, general night views, fireworks displays and neon signs.

Landscape
This mode is for when you are record distant subjects such as mountains. Also it prevents your camcorder from focusing on glass or metal mesh in windows when you are recording a subject behind glass or a screen.

(1) Set the POWER switch to CAMERA or MEMORY/NETWORK (DCR-IP55 only).
(2) Press FN to display PAGE1.
(3) Press MENU, then select PROGRAM AE in M in the menu settings to select a desired mode (p. 175).

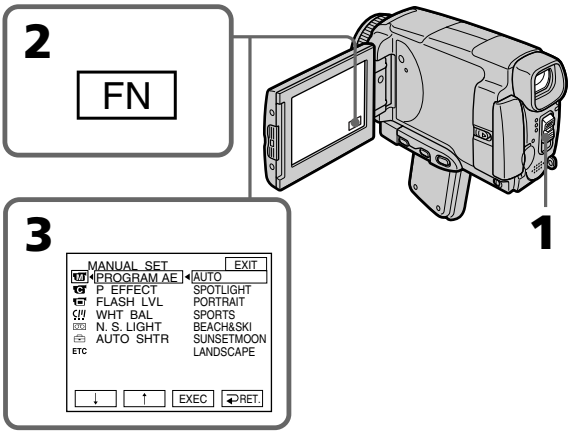

To return to FN

Press EXIT.

To turn the PROGRAM AE off

Select AUTO in PROGRAM AE in the menu settings.

Notes

- Because your camcorder is set to focus only on subjects in the middle to far distance, you cannot take close-ups in the following modes:
  – Spotlight
  – Sports lesson
  – Beach & ski
- Your camcorder is set to focus only on distant subjects in the following modes:
  – Sunset & moon
  – Landscape
- The following functions do not work in PROGRAM AE:
  – Color Slow Shutter
  – Slow shutter
  – OLD MOVIE
  – BOUNCE

- The PROGRAM AE does not work in the following cases (The indicator flashes):
  – To set the NIGHTSHOT to ON.
  – To record images on a "Memory Stick" using the MEMORY MIX.
- When you set the POWER switch to MEMORY/NETWORK (DCR-IP55 only), sports lesson does not work. (The indicator flashes.)

While WHT BAL is set to AUTO in the menu settings
The white balance is adjusted even if the PROGRAM AE is selected.

You can adjust the following functions while using the PROGRAM AE:
– Exposure
– Flexible Spot Meter

If you record under a discharge tube such as a fluorescent lamp, sodium lamp or mercury lamp
Flickering or changes in color may occur in the following modes. If this happens, turn the PROGRAM AE off:
– Soft portrait
– Sports lesson

Adjusting the exposure manually

You can adjust and set the exposure. Normally the exposure is automatically adjusted. Adjust the exposure manually in the following cases:
– The subject is backlit
– To shoot a bright subject agaist a background
– To record dark pictures (e.g. night scenes) faithfully

(1) Set the POWER switch to CAMERA or MEMORY/NETWORK (DCR-IP55 only).
(2) Press FN to display PAGE1.
(3) Press EXPOSURE. The EXPOSURE screen appears.
(4) Press MANUAL.
(5) Adjust the exposure using –/+.
– : to dim
+ : to brighten
(6) Press ↩ OK. The display returns to PAGE1.

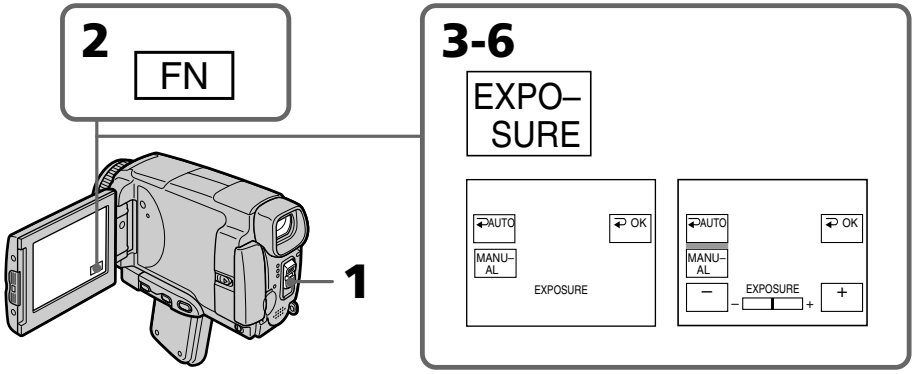

To return to FN
Press EXIT.

To return to the automatic exposure mode
Press ↩ AUTO in step 5. The display returns to PAGE1.

Note
When you adjust the exposure manually, the following functions do not work:
– Color Slow Shutter
– Backlight

Your camcorder automatically returns to the automatic exposure mode:
– If you change the PROGRAM AE mode.
– If you set NIGHTSHOT to ON.

Using the spot light-metering mode – Flexible Spot Meter

You can take a picture with the appropriate exposure automatically for just the point you want to focus on and with its exposure fixed. Use the Flexible Spot Meter mode in the following cases:
– The subject is backlit.
– When there is strong contrast between the subject and background such as with a subject that is on stage and lighted by a spotlight.

(1) Set the POWER switch to CAMERA or MEMORY/NETWORK (DCR-IP55 only).
(2) Press FN to display PAGE1.
(3) Press SPOT METER. The SPOT METER screen appears.
(4) Press the desired area in the frame on the LCD screen.
The SPOT METER indicator flashes on the LCD screen. The exposure of the point you selected is adjusted.
(5) Press ↩ OK. The display returns to PAGE1.

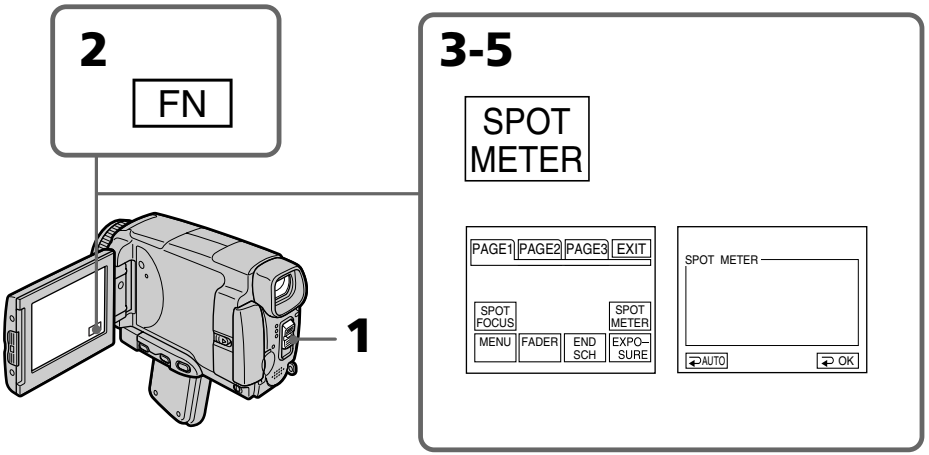

To return to FN
Press EXIT.

To return to the automatic exposure mode
Press ↩ AUTO in step 3. The display returns to PAGE1.

Note
The following functions do not work during the Flexible Spot Meter:
– Color Slow Shutter
– Backlight
– Exposure

Your camcorder automatically returns from the Flexible Stop Meter to the automatic exposure:
– If you change the PROGRAM AE mode
– If you set NIGHTSHOT to ON

Focusing manually

You can gain better results by manually adjusting the focus in the following cases. Normally, focus is automatically adjusted.

- The autofocus mode is not effective when shooting:
  - subjects through glass coated with water droplets
  - horizontal stripes
  - subjects with little contrast with backgrounds such as walls or the sky
- When you want to change the focus from a subject in the foreground to a subject in the background
- Shooting a stationary subject when using a tripod

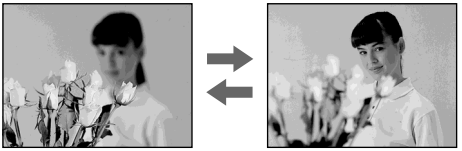

(1) Set the POWER switch to CAMERA or MEMORY/NETWORK (DCR-IP55 only).
(2) Press FOCUS. The indicator appears.
(3) Turn the focus ring to sharpen focus.

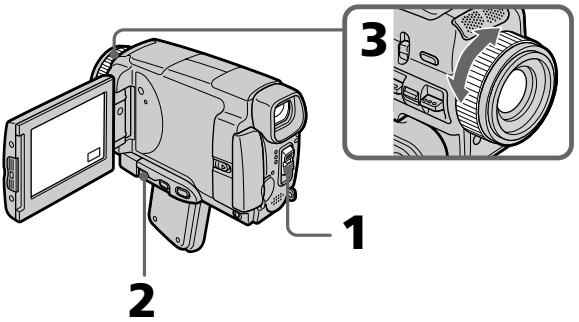

To return to the autofocus mode

Press FOCUS to turn off , or indicator.

To focus precisely

It is easier to focus on the subject if you adjust the zoom to shoot at the "W" (wide-angle) position after focusing at the "T" (telephoto) position.

When you shoot close to the subject

Focus at the end of the "W" (wide-angle) position.

changes as follows:
when recording a distant subject
when the subject is too close to focus on

Focal distance information is displayed for about three seconds on the LCD screen in the following cases:
– When switching the focus adjustment mode from autofocus to manual
– When turning the focus ring

Focal distance information
– This information aids focusing if it is not easy to focus on the subject, for example, when recording in the dark. Use this information as a rough guide to get a sharp focus.
– You cannot get correct information if you have attached a conversion lens (optional) to your camcorder.

Using the spot focus mode – Spot Focus

You can take a picture with the appropriate focus automatically for just the point you want to focus on and with its focus fixed.

(1) Set the POWER switch to CAMERA or MEMORY/NETWORK (DCR-IP55 only).
(2) Press FN to display PAGE1.
(3) Press SPOT FOCUS. The SPOT FOCUS screen appears.
(4) Press the desired area in the frame on the LCD screen.
The SPOT FOCUS indicator flashes on the LCD screen. When the focus of the point you selected is adjusted, the indicator appears.
(5) Press OK to return to PAGE1.

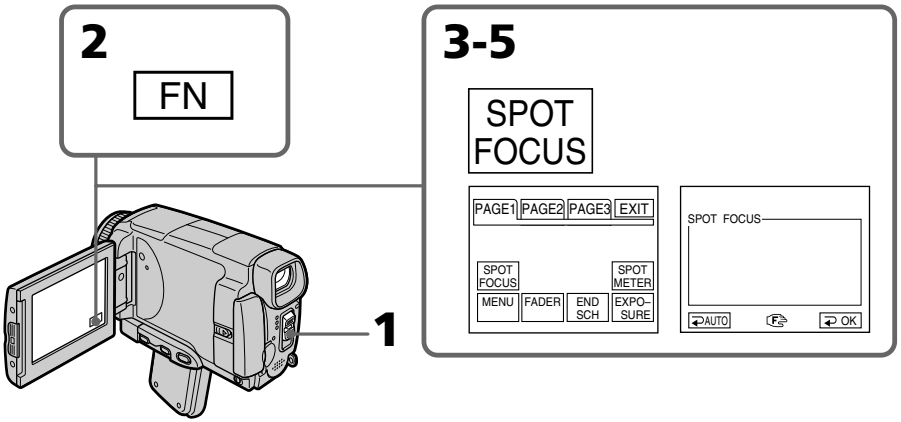

To return to FN

Press EXIT.

To return to the autofocus mode

Press AUTO in step 4. The display returns to PAGE1.

Note

When adjusting Spot Focus, the following modes do not work:
– Fader
– PROGRAM AE

Focal distance information

It is not displayed on the screen.

Using the viewfinder

Turn the LCD panel over and move it back to your camcorder body with the LCD screen facing out. You can operate with the touch panel using the viewfinder.
Use the viewfinder in the following case:
When operating camera brightness and the fader (only in CAMERA mode) on the touch panel using the viewfinder

(1) Set the POWER switch to CAMERA or MEMORY/NETWORK (DCR-IP55 only).
(2) Turn the LCD panel over and move it back to your camcorder body with the LCD screen facing out.
(3) Press OFF. The message PANEL OFF appears on the LCD screen.
(4) Press OK. The LCD screen is turned off.
(5) Press the LCD screen through the viewfinder. EXPOSURE, OK, ON and FADER (only in CAMERA mode) appear.
(6) Select the desired item, then press OK.

EXPOSURE: adjust the exposure by pressing –/+.
FADER: press FADER until the desired fader mode is displayed.
The indicator changes as follows:
FADER → M. FADER → BOUNCE → MONOTONE → (no indicator)

ON: The LCD screen lights up in the mirror mode.

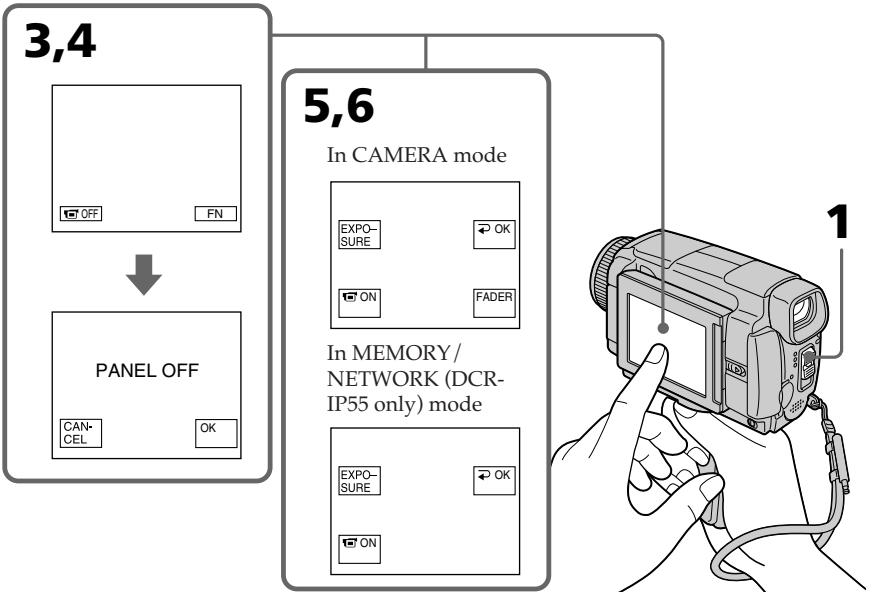

To make the buttons on the LCD screen disappear

Press OK.

Notes

- Do not touch the LCD screen with wet hands.
- Do not press the LCD screen with sharp objects other than the stylus supplied. (DCR-IP55 only).
- In VCR or memory playback mode, you cannot operate with the touch panel through the viewfinder.

To operate the items that are not displayed

Set the LCD screen back to the previous position. Operate the items using the LCD screen.

FN, OFF, PLAY, INDEX and NETWORK in the viewfinder

These buttons appear mirror-reversed.

Available recording time

See the table on page 19 for details of the recording time using the viewfinder.

Playing back a tape with picture effects

During playback, you can process a scene using the picture effect functions: NEG.ART, SEPIA, B&W and SOLARIZE.

(1) In the playback or playback pause mode, press FN to display PAGE1.
(2) Press MENU, then select P EFFECT in [M] in the menu settings to select a desired picture effect mode (p. 175).
See page 61 for details of each picture effect function.

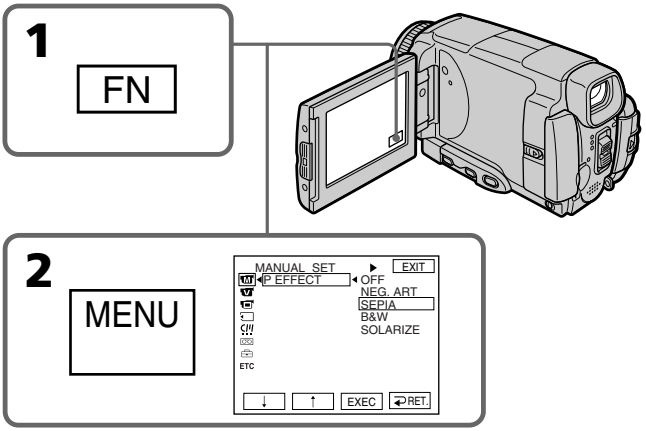

To return to FN

Press EXIT.

To cancel the picture effect function

Set P EFFECT to OFF in the menu settings.

Notes

- You cannot process externally input scenes using the picture effect function.
- You cannot record images on a tape on your camcorder while you are processing the image using the picture effect function. However, you can record images on a "Memory Stick" (p. 122, 132), or on a VCR using your camcorder as a player.

Pictures processed by the picture effect function

Pictures processed by the picture effect function are not output through the i.LINK (MICROMV Interface).

When you set the POWER switch to OFF (CHG) or stop playing back

The picture effect function is automatically canceled.