Playing back a tape with digital effects

During playback, you can process a scene using the digital effect functions: STILL, FLASH, LUMI. and TRAIL.

(1) In the playback or playback pause mode, press FN and select PAGE2.
(2) Press DIG EFFT. The DIG EFFT screen appears.
(3) Select a desired digital effect mode. In the STILL or LUMI. mode, the picture that you select the mode is stored in memory as a still image.
(4) Press –/+ to adjust the effect. See page 62 for details.
(5) Press ↩ OK. The display returns to PAGE2.

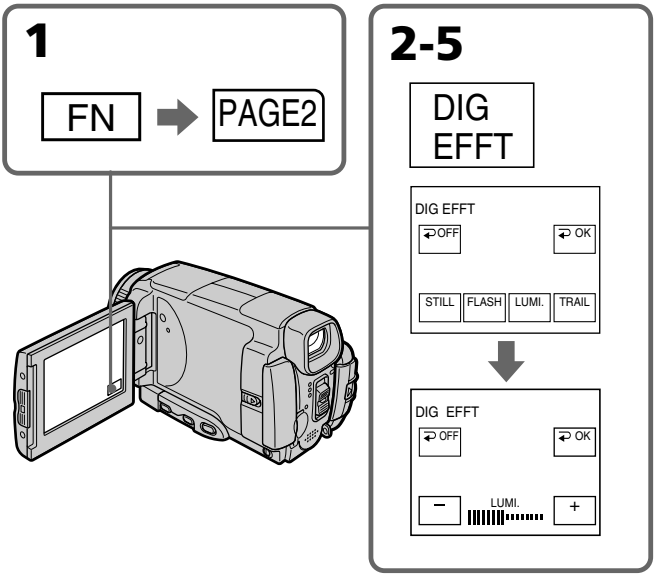

To return to FN
Press EXIT.

To cancel the digital effect function
Press ↩ OFF in step 2. The display returns to PAGE2.

Notes
- You cannot process externally input scenes using the digital effect function.
- You cannot record images on a tape on your camcorder while you are processing the image using the digital effect function. However, you can record images on a "Memory Stick" (p. 122, 132), or on a VCR using your camcorder as a player.

Pictures processed by the digital effect function
Pictures processed by the digital effect function are not output through the i.LINK (MICROMV Interface).

When you set the POWER switch to OFF (CHG) or stop playing back
The digital effect function is automatically canceled.

Enlarging images recorded on tapes – Tape PB ZOOM

You can enlarge playback images recorded on tapes. Besides the operation described here, your camcorder can enlarge still images recorded on the "Memory Stick" (p. 142).

(1) In the playback or playback pause mode, press FN and select PAGE2.
(2) Press PB ZOOM. The PB ZOOM screen appears.
(3) Press the area you want to enlarge in the frame on the PB ZOOM screen.
The area you pressed moves to the center of the LCD screen, and the playback image is enlarged to twice the size. If you press the other area again, the area moves to the center of the LCD screen.
(4) Adjust the zoom ratio by the zoom lever.
You can select the image from 1.1 times up to five times its size.
"W" side: Decrease the zoom ratio.
"T" side: Increase the zoom ratio.

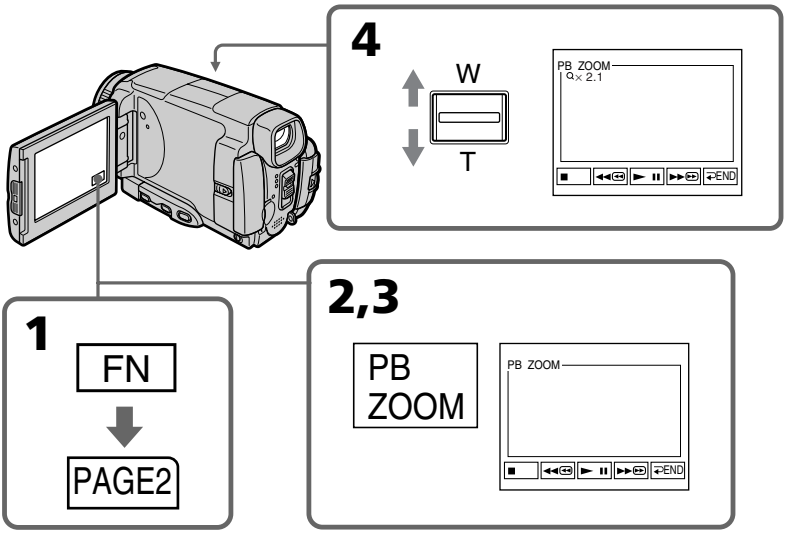

To cancel the PB ZOOM function

Press ↩ END.

Notes

- You cannot process externally input scenes using the PB ZOOM function with your camcorder.
- You cannot record images on a tape on your camcorder while you are processing the image using the tape PB ZOOM function. However, you can record images on a "Memory Stick" (p. 122), or on a VCR using your camcorder as a player.
- You cannot record moving pictures on a "Memory Stick" on your camcorder while you are processing the picture using the tape PB ZOOM function.

The PB ZOOM function is automatically canceled when you operate the following functions:
– Set the POWER switch to OFF (CHG)
– Stop playing back
– Insert a "Memory Stick"

Images in the PB ZOOM
Images in the PB ZOOM mode are not output through the i.LINK (MICROMV Interface) and ψ (USB) jack.

In the PB ZOOM mode
If you press DSPL/TOUCH PANEL button, the frame on the PB ZOOM screen disappears. You cannot move the part you pressed to the center of the LCD screen.

Edge of the enlarged image
The edge of the enlarged image cannot be displayed at the center of the LCD screen.

Searching for a scene – MULTI-PICTURE SEARCH

Using the multi-picture search function, you can display thumbnails of all the beginning scenes of moving pictures and still images recorded in the tape onto the index screen. The recording date and title of each image or scene are also indicated. The thumbnails described in this section are the still images of all the beginning scenes of each recorded moving pictures and still images to help you search for the desired scene easily. When you select the thumbnail you want to play back, the camcorder starts searching for the image or scene and plays it back automatically.
You can also control this function using the Remote Commander.

(1) Set the POWER switch to VCR.
(2) Press FN to display PAGE1.
(3) Press MULTI SCH. The MULTI SCH screen appears.
(4) Press ←/→ to select the direction to scan. The camcorder starts scanning in the selected direction. When you select →, the thumbnails are displayed from the upper-left window, and when you select ←, they are displayed from the lower-right window. When scanning is completed, it stops automatically. The upper-left window turns black and the thumbnails will be displayed on the index screen.

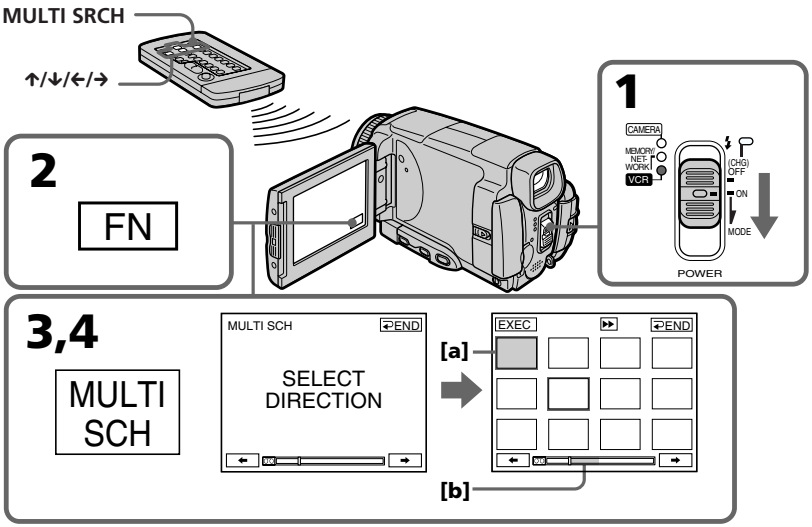

[a] The picture being fast-forwarded or rewound
[b] The blue portion indicates the range of the scan currently being made to display thumbnails

(5) Select the thumbnail you want to play back, then press EXEC. The camcorder starts searching for the image or scene and plays it back automatically. The blue portion of the bar indicates the scanning range and the white portion of the bar indicates the recorded portion.

When you want to change the thumbnail
Press ↩ RET, and select the thumbnail you want to play back again, then press ↩ OK.

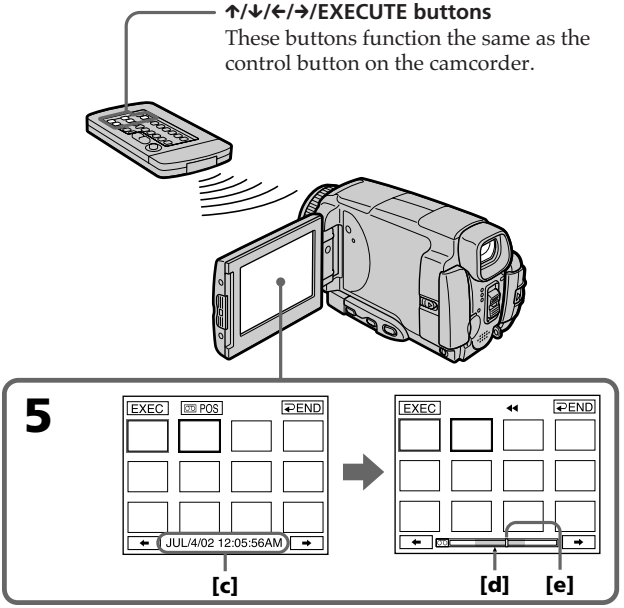

[c] The title/date (The title turns to the date indication after five seconds.)
[d] The actual point you are trying to search for (yellow ▲ mark)
[e] The present point on the tape (yellow bar)

To return to the MULTI SCH screen from playback
Press ↩ RET.

To stop searching
Press STOP on the Remote Commander.

To end the multi-picture search function
Press ↩ END. The display returns to PAGE1.

To end the multi-picture search function from the playback screen
Press EXIT.

When controlling the camcorder with the Remote Commander

You can use the MULTI SRCH and ↑/↓/←/→/EXECUTE buttons.

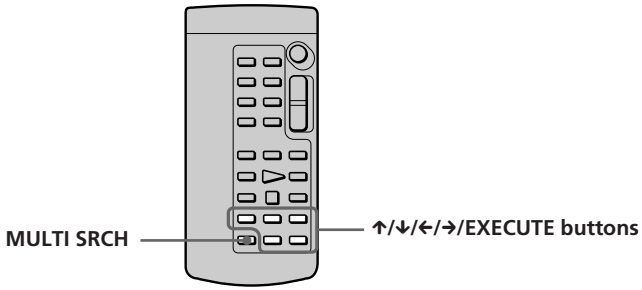

If the tape has a blank portion in the beginning of the tape or between recorded portions
The multi-picture search function may not work correctly.

The number of thumbnails stored in one cassette
About 400 thumbnails can be stored.

The number of thumbnails that can be displayed for in one scanning
A maximum of 11 thumbnails can be displayed for in one scanning.

When you press MULTI SRCH on the Remote Commander
The MULTI SCH screen appears.

During searching
The other functions of this camcorder do not work.

The thumbnail images displayed on the MULTI SCH screen
You cannot modify these thumbnail images.

When you use the multi-picture search function with the digital effect activated
The digital effect will be canceled.

Some of the 11 thumbnails may not be displayed in the following cases:
- These are fewer than 11 recorded images and scenes on the searched portion of the tape.
- When scanning a tape recorded over previous recordings.
- When you have erased all the Micro Cassette Memory of the tape (p. 102).

To select the thumbnail with the Remote Commander
Press ↑/↓/←/→ on the Remote Commander.

When you press DATE or POS
You can switch to the title/date display or the tape bar display that shows the present point on the tape.
While the camcorder is searching for the image or scene, the tape ber display appears even if you select Title/Date.

Notes
- Thumbnails may not be displayed depending on the condition of the tape. This is not a malfunction.
- Noise may appear on the thumbnails. However, this has no effect on the recorded images.

When you select ← or → during scanning
The next 11 thumbnails will be scanned.

Even if the first thumbnail is not displayed before the scanning is completed
You can play back the image or scene.

Searching the boundaries of recorded tape by title – TITLE SEARCH

You can search for the boundaries of a recorded tape by selecting the title. Use the Remote Commander for this operation.

(1) Set the POWER switch to VCR.
(2) Press SEARCH MODE on the Remote Commander repeatedly, until the TITLE SEARCH indicator appears.
The indicator changes as follows:
TITLE SEARCH → DATE SEARCH → (no indicator)

(3) Press ↑ or ↓ on the Remote Commander to select the title for playback, then press EXECUTE on the Remote Commander.
Even if you do not press EXECUTE, playback starts automatically in two seconds after you press ↑ or ↓.

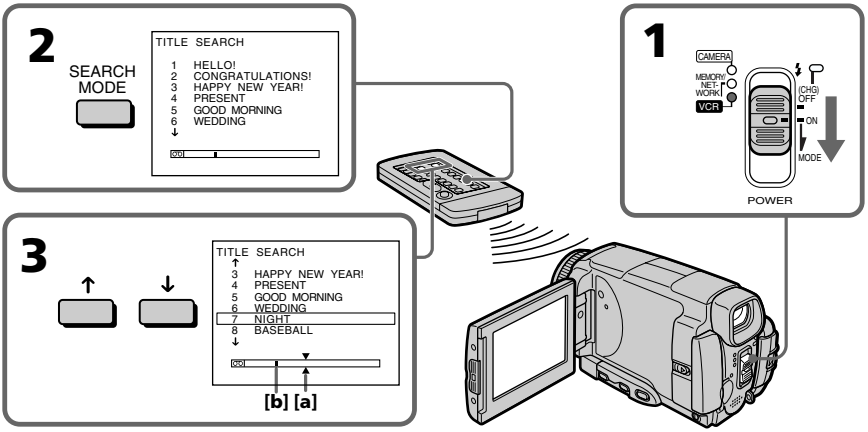

[a] Actual point you are trying to search for
[b] Present point on the tape

To stop searching

Press STOP on the Remote Commander.

If a tape has a blank portion in the beginning of the tape or between recorded sections

The title search function may not work correctly.

To superimpose a title

See page 92.

Searching a recording by date – DATE SEARCH

Your camcorder automatically searches for the point where the recording date changes and starts playback from that point by selecting the recording date **(Date search)**.
Use this function to check where recording dates change or to edit the tape at each recording date.

Searching for the date by using cassette memory

(1) Set the POWER switch to VCR.
(2) Press SEARCH MODE on the Remote Commander repeatedly, until the DATE SEARCH indicator appears.
The indicator changes as follows:
TITLE SEARCH → DATE SEARCH → (no indicator)

(3) Press ↑ or ↓ on the Remote Commander to select the date for playback, then press EXECUTE on the Remote Commander.
Even if you do not press EXECUTE, playback starts automatically in two seconds after you press ↑ or ↓.

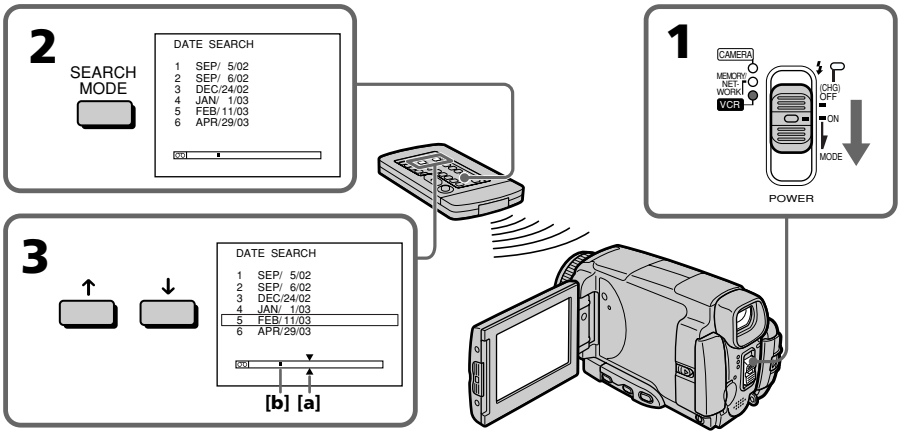

[a] Actual point you are trying to search for
[b] Present point on the tape

To stop searching

Press STOP on the Remote Commander.

If a tape has a blank in the beginning of the tape or a portion between recorded sections
The date search function may not work correctly.

Micro Cassette Memory
The tape cassette memory can hold 20 recording date data.

Dubbing a tape

Using the A/V connecting cable

You can dub or edit on the VCR connected to your camcorder using your camcorder as a player. Connect your camcorder to the VCR using the A/V connecting cable supplied with your camcorder. The supplied A/V connecting cable is equipped with an S video plug and a video plug. Use either the S video plug or the video plug depending on the recorder. Do not connect both of the plugs to the recorder.

Before operation

- Set DISPLAY to LCD in the menu settings. (The default setting is LCD.)
- Press the following buttons to make the indicator disappear so that they will not be superimposed on the edited tape:
  On your camcorder:
  DSPL/TOUCH PANEL
  On the Remote Commander:
  DISPLAY, DATA CODE, SEARCH MODE

(1) Insert a blank tape (or a tape you want to record over) into the VCR, and insert the recorded tape into your camcorder.
(2) Prepare the VCR for recording, then set the input selector to LINE.
Refer to the operating instructions of the VCR.
(3) Set the POWER switch to VCR.
(4) Play back the recorded tape on your camcorder.
(5) Start recording on the VCR.
Refer to the operating instructions of your VCR.

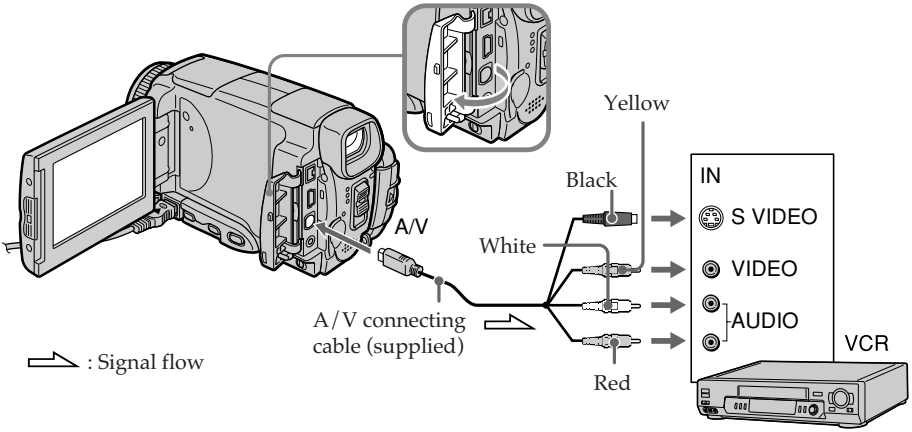

When you have finished dubbing a tape

Stop recording on the VCR, and stop playback on your camcorder.

You can edit on VCRs that support the following systems
8 mm, Hi8 Hi8, Digital8, VHS VHS, S-VHS S-VHS, VHSC VHSC, S-VHSC S-VHSC, Beta Betamax, ED Beta ED Betamax, Mini DV mini DV, DV DV or MICROMV MICRO MV

If your VCR is a monaural type
Connect the yellow plug of the A/V connecting cable to the video input jack on the VCR and the white or red plug to the audio input jack on the VCR or TV. When the white plug is connected, the left channel audio is output, and when the red plug is connected, the right channel audio is output.

If your VCR has an S video jack
Connect using the S video plug to faithfully obtain original pictures. With this connection, you do not need to connect the yellow (video) plug of the A/V connecting cable. Connect the S video plug to the S video jack of the VCR. This connection produces higher quality MICROMV format pictures.

Using the i.LINK cable

Simply connect the i.LINK cable (optional) to the i.LINK (MICROMV Interface) of your camcorder and to the i.LINK (MICROMV Interface) of the MICROMV product. With digital-to-digital connection, video and audio signals are transmitted in digital form for high-quality editing. (You cannot connect the camcorder to a DV product.) You cannot dub the titles, displayed indicators, the contents of Micro Cassette Memory, or letters on the "Memory Stick" index screen.

(1) Insert a blank tape (or a tape you want to record over) into the VCR, and insert the recorded tape into your camcorder.
(2) Prepare the VCR for recording. If your VCR has the input selector, set it to MPEG IN. Refer to the operating instructions of the VCR.
(3) Set the POWER switch to VCR.
(4) Play back the recorded tape on your camcorder.
(5) Start recording on the VCR. Refer to the operating instructions of the VCR.

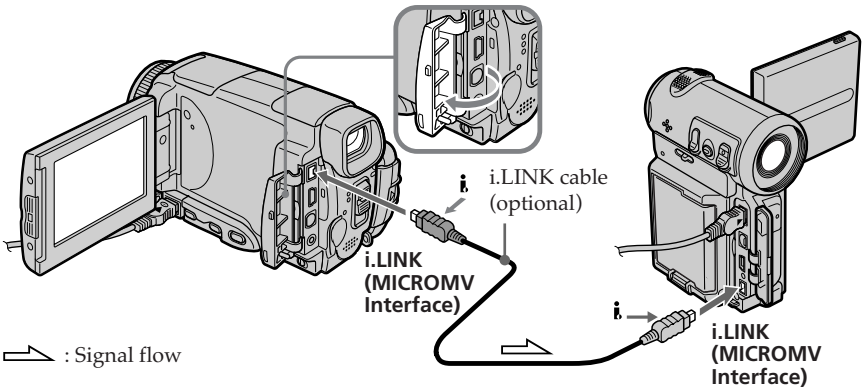

When you have finished dubbing a tape

Stop recording on the VCR, and stop playback on your camcorder.

You can connect one VCR only using the i.LINK cable
See page 198 for more information about i.LINK.

Pictures processed by the picture effect, the digital effect or PB ZOOM function
These pictures are not output through the i. LINK (MICROMV Interface).

The following functions do not work during digital editing:
– Picture effect
– Digital effect
– PB ZOOM

Note on playback pause pictures
When you record a playback pause picture:
- The recorded picture becomes rough when recorded through the i.LINK (MICROMV Interface).
- The picture may jitter when you play back the tape on other video equipment. And there may be a time-lag when you play back the tape on other video equipment.

Recording video or TV programs

When using the A/V connecting cable

You can record a tape from another VCR or a TV program from a TV that has video/audio outputs. Use your camcorder as a recorder.

1 Switching the video input jack of the A/V connecting cable

The supplied A/V connecting cable is equipped with an S video plug and a video plug. You have to select one of the jacks in the menu settings. The default setting is VIDEO. If the setup is not necessary, go to "2 Making a recording" on page 89.

(1) Set the POWER switch to VCR.
(2) Press FN to display PAGE1
(3) Press MENU, then select VIDEOINPUT in in the menu settings, then press EXEC.
(4) Select VIDEO or S VIDEO, then press EXEC.

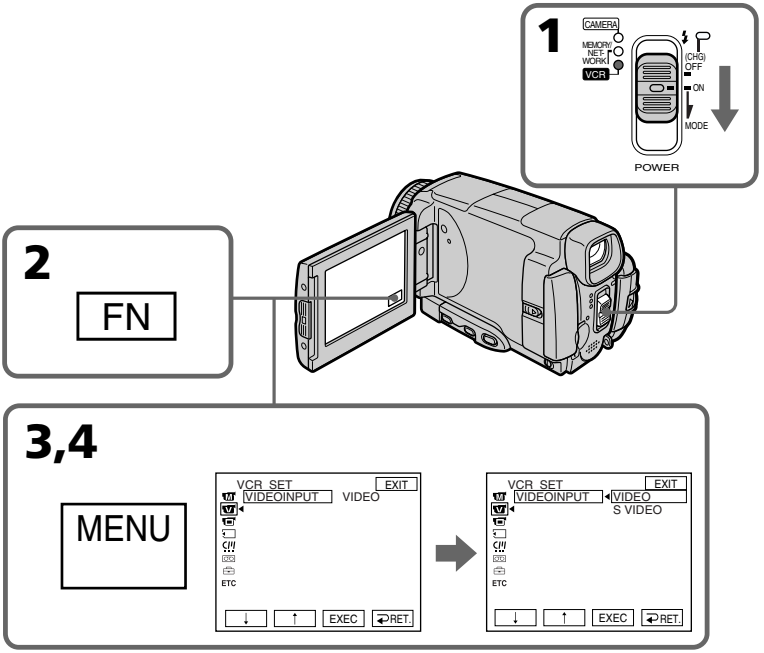

To return to FN

Press EXIT.

2 Making a recording

Before operation
Set DISPLAY to LCD in ETC in the menu settings. (The default setting is LCD.)

(1) Insert a blank tape (or a tape you want to record over) into your camcorder. If you are recording a tape from the VCR, insert a recorded tape into the VCR.
(2) Set the POWER switch to VCR.
(3) Set the camcorder in the recording pause mode.
Press FN and select PAGE3.
Press REC CTRL. Next, press REC PAUSE.
(4) Start playback on VCR if you record a tape from VCR. Select a TV program if you record from TV. The picture from VCR or TV appears on the LCD screen or through the viewfinder.
(5) Press REC START at the scene where you want to start recording from.

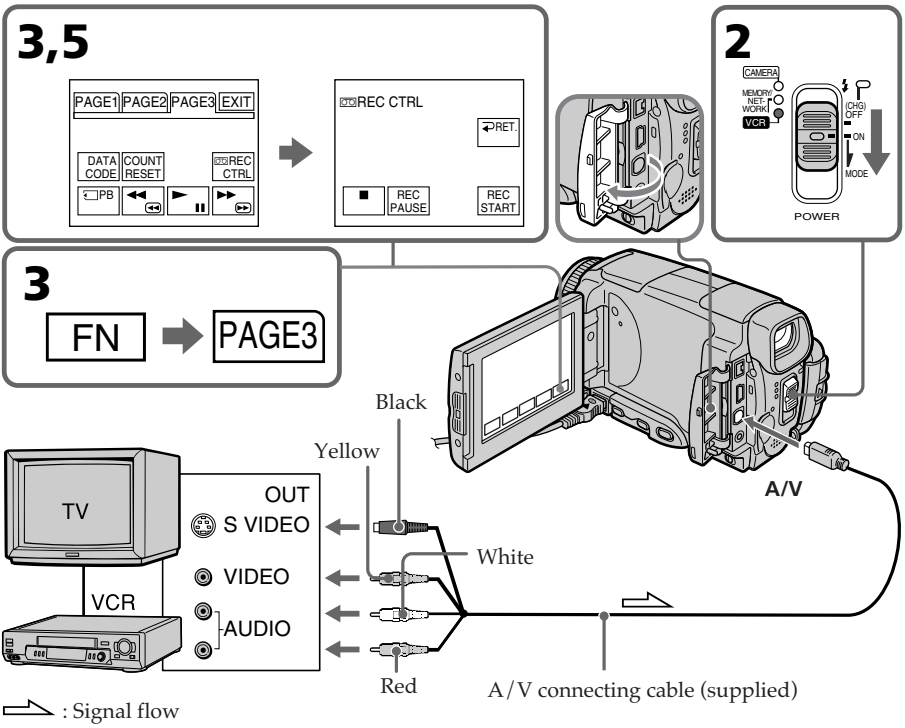

When you have finished dubbing a tape

Press ■ on the LCD screen or STOP on the Remote Commander to stop recording on your camcorder and stop playback on VCR or TV.

Note
When you press MEMORY PLAY on the Remote Commander in step 3, an image recorded on the "Memory Stick" is displayed. If you press REC START, the image will be recorded on the tape. To stop memory playback, press MEMORY PLAY on the Remote Commander again.

If your VCR is a monaural type
Connect the yellow plug of the A/V connecting cable to the video output jack and the white or the red plug to the audio output jack on the VCR or the TV. When the white plug is connected, the left channel audio is output, and when the red plug is connected, the right channel audio is output.

If your TV or VCR has an S video jack
Pictures can be reproduced more faithfully by using an S video cable.
With this connection, you do not need to connect the yellow (video) plug of the A/V connecting cable.
Connect an S video cable to the S video jacks of both your camcorder and the TV or VCR. This connection produces higher quality MICROMV format pictures.

When using the i.LINK cable

Simply connect the i.LINK cable to the i.LINK (MICROMV Interface) of your camcorder and to the i.LINK (MICROMV Interface) of the MICROMV product. With digital-to-digital connection, video and audio signals are transmitted in digital form for high-quality editing. (You cannot connect the camcorder to a DV product.)

(1) Insert a blank tape (or a tape you want to record over) into your camcorder, and insert the recorded tape into VCR.
(2) Set the POWER switch to VCR.
(3) Press FN and select PAGE3.
Set the camcorder in the recording pause mode.
Press FN and select PAGE3, then press REC CTRL. Next, press REC PAUSE.
(4) Start playback on VCR. The picture from the VCR appears on the LCD screen of your camcorder.
(5) Press REC START at the scene where you want to start recording.

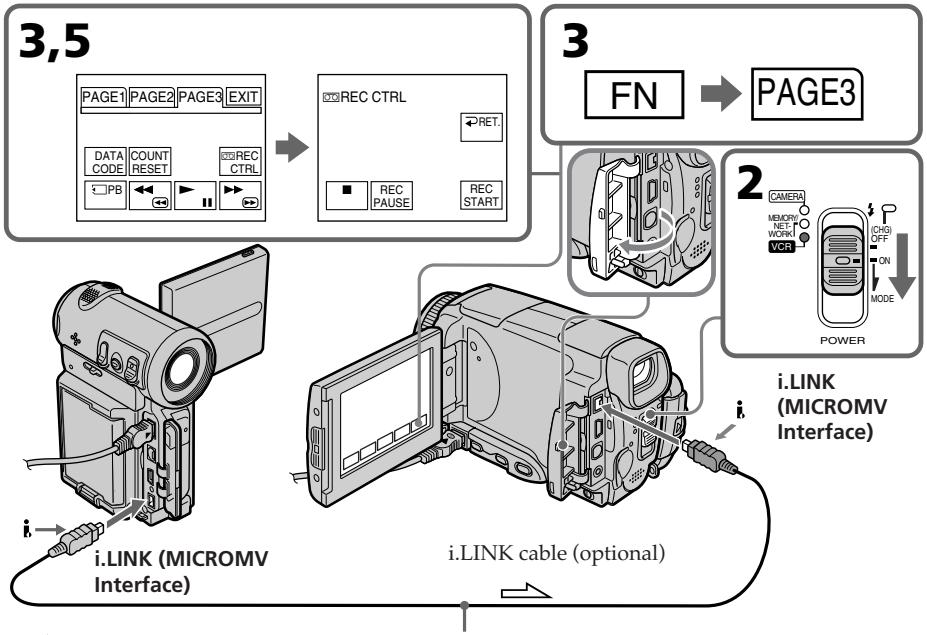

: Signal flow

When you have finished dubbing a tape

Press ■ on the LCD screen or Stop on the Remote Commander to stop recording on your camcorder and stop playback on VCR or TV.

Notes

- When an incompatible picture (such as one recorded with the DV format) is input, the message INPUT ERROR appears.
- You can connect one VCR only using the i.LINK cable.
- First, start playback or turn to the playback pause mode before the camcorder starts recording or turns to the recording pause mode. If no signal is input into the camcorder, the message "NO INPUT" appears and the camcorder cannot start recording.

Note on playback pause pictures

When you record a playback pause picture:

- The recorded picture becomes rough when recorded through the i.LINK (MICROMV Interface).
- The picture may jitter when you play back the tape on other video equipment. And there may be a time-lag when you play back the tape on other video equipment.

Before recording

Make sure if the MPEG IN indicator appears on the LCD screen. The MPEG IN indicator may appear on both equipment.

Superimposing a title

You can superimpose a title for five seconds from the recording start point. When you play back the tape, the title is displayed for about five seconds from the point where you superimposed it.

You can select one of eight preset titles and two custom titles (p. 97). You can also select the color, size and position of titles.

Superimposing a title on starting a recording

(1) Set the POWER switch to CAMERA.
(2) Press FN and select PAGE2.
(3) Press TITLE.
(4) Press ↓/↑ to select 🗀, then press EXEC. The PRESET TITLE screen appears.
(5) Press ↓/↑ to select a desired title, then press EXEC. The title is displayed on the LCD screen.
(6) If necessary, change the color, size, or position by pressing COLOR, SIZE, POS ↓ or POS ↑.
(7) Press TITLE OK. The screen to save a title appears on the LCD screen.
(8) Press SAVE TITLE.
The TITLE indicator appears. And when you press START/STOP to start recording, TITLE SAVE appears on the LCD screen for about five seconds and the title is set.

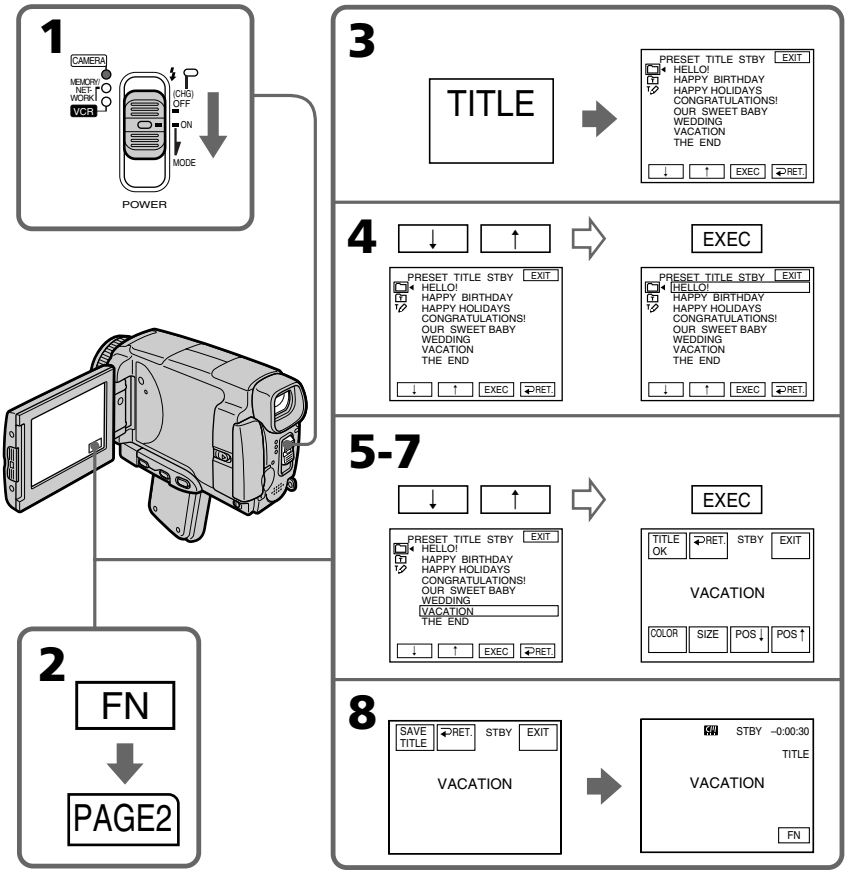

If you set the write-protect tab to lock
You cannot superimpose or erase the title. Slide the write-protect tab to release the write protection.

To use the custom title
If you want to use the custom title, select T in step 4.

On a blank portion of the tape
You cannot superimpose a title on the tape.

If the tape has a blank portion in the middle of the recorded parts
The title may not be displayed correctly.

The titles superimposed with your camcorder

- They are displayed only by the MICROMV format video equipment with index titler function.
- The point you superimposed the title may be detected as an index signal when searching a recording with other video equipment.

Not to display title during playback

Set TITLE DSPL to OFF in the menu settings (p. 180).

Title setting

- The title color changes as follows:
  WHITE → YELLOW → VIOLET → RED → CYAN → GREEN → BLUE
- The title size changes as follows:
  SMALL ↔ LARGE
  You cannot input 13 characters or more in LARGE size. If you input more than 12 characters, the title size returns to SMALL even if you select LARGE.
- If you select the title size "SMALL", you have nine choices for the title position. If you select the title size "LARGE", you have eight choices for the title position.

The number of titles recordable on one cassette

You can record up to 20 titles when each title consists of 12 characters.

When 20 titles are already superimposed

The message TITLE FULL appears. Erase unnecessary titles.

Superimposing a title on a recorded tape

You can superimpose a title for five seconds from the recording start point.

(1) Set the POWER switch to VCR.
(2) Press FN to display PAGE1.
(3) Press TITLE. The TITLE screen appears.
(4) Press INPUT TITLE. The TITLE SET screen appears.
(5) Press ⬅/➡ to select the direction to scan. The camcorder starts scanning in the selected direction. When you select ➡, the thumbnails are displayed from the upper-left window, and when you select ⬅, they are displayed from the lower-right window. After the scanning is completed, the thumbnails are displayed on the index screen.
(6) Select the thumbnail on which you want to superimpose a title, then press EXEC. The title menu appears.
(7) Perform step 4 to 6 in "Superimposing a title on starting a recording" on page 92.
(8) Press SAVE TITLE.
TITLE SAVE appears on the LCD screen for about five seconds and the title is set.

Superimposing a title

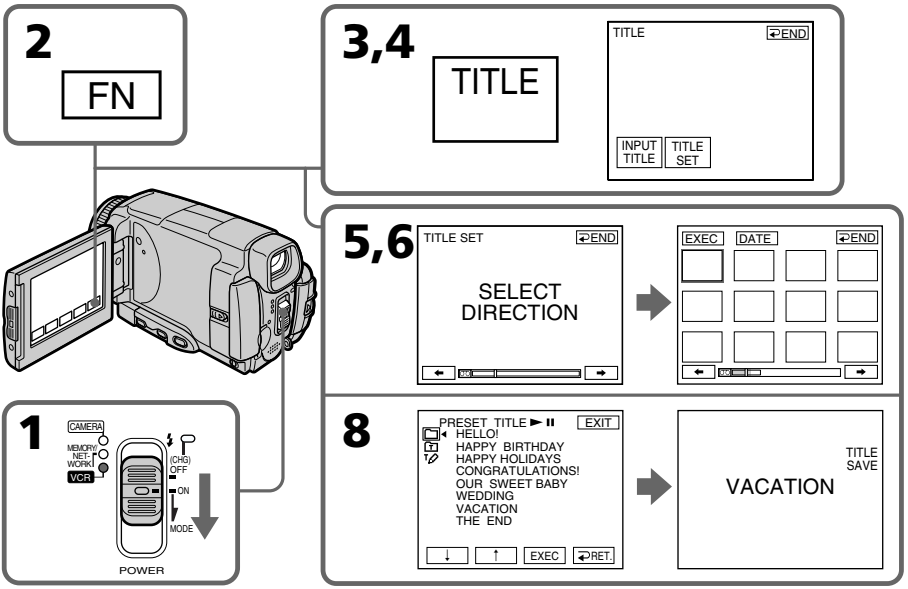

To use a custom title

If you want to use a custom title, select in step 7.

Notes

- Thumbnails may not be displayed depending on the condition of the tape. This is not a malfunction.
- Noise may appear on the thumbnails. However, this has no effect on the recorded images.
- You cannot execute TITLE SAVE until the playback picture is displayed in step 8.

Erasing a title

(1) Set the POWER switch to CAMERA or VCR.
(2) Press FN to display PAGE1.
(3) Press MENU, then select TITLEERASE in CM in the menu setting, then press EXEC (p. 181) .
(4) Press ↓/↑ to select the title you want to erase, then press EXEC.
ERASE OK? appears.
(5) Make sure the title is the one you want to erase, then press OK.

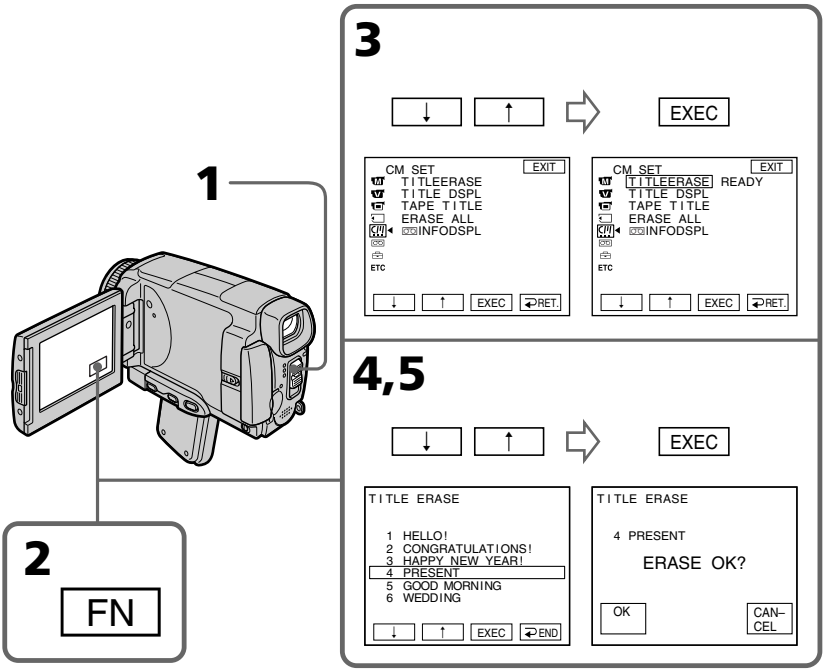

To return to FN

Press EXIT.

To cancel erasing

Press CANCEL in step 4.

Making your own titles

You can make up to two titles and store them in the memory of your camcorder. Each title can have up to 20 characters.

Making a title in CAMERA mode

(1) Set the POWER switch to CAMERA.
(2) Press FN to display PAGE2.
(3) Press TITLE.
(4) Press ↓/↑ to select T, and press EXEC. The TITLE SET screen appears.
(5) Select CUSTOM1 SET or CUSTOM2 SET with ↓/↑, then press EXEC.
(6) Select the desired character. Repeat pressing a key to select the desired character on the key.
(7) Press → to move the cursor for the next character. Repeat the same procedure as step 6 and 7 to complete your title.
(8) Press SET. The title is stored in memory.

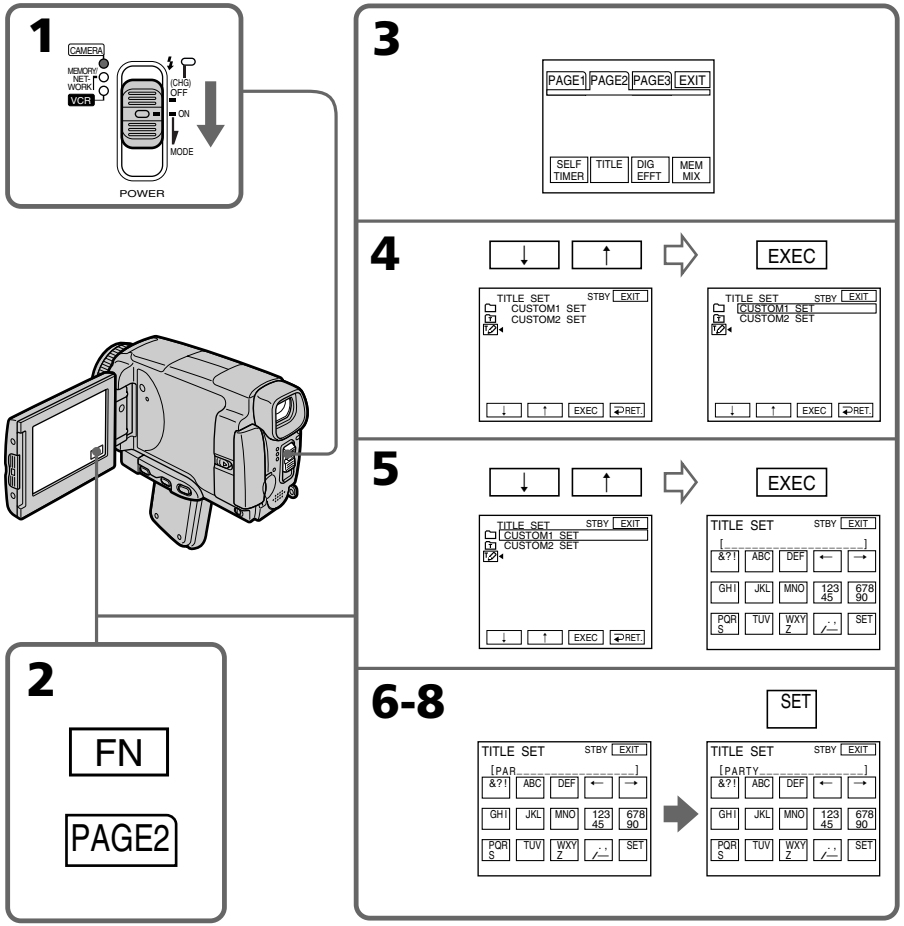

Editing

To return to FN
Press EXIT.

To change a title you have stored
In step 5, select CUSTOM1 SET or CUSTOM2 SET depending on which title you want to change, then press EXEC and enter the new title as desired.

To superimpose your own title on a tape
Follow the procedure in "Superimposing a title on starting a recording" on page 92.

If you take five minutes or longer to enter characters in the standby mode while a cassette is in your camcorder, the power automatically goes off
The characters you have entered remain stored in memory. Set the POWER switch to OFF (CHG) once and then to CAMERA again, then complete your title.
We recommend setting the POWER switch to VCR (p. 99) or removing the cassette so that your camcorder does not automatically turn off while you are entering title characters.

To erase the character
Press ←. The last character is erased.

To enter a space
Press →.

To enter the character on the same button in succession
Press → to move the cursor to the next position, and enter the character.

Making a title in the VCR mode

(1) Set the POWER switch to VCR.
(2) Press FN to display PAGE1.
(3) Press TITLE. The TITLE screen appears.
(4) Press TITLE SET. The TITLE SET screen appears.
(5) Press ↑/↓ to slect CUSTOM1 SET or CUSTOM2 SET, then press EXEC.
(6) Perform step 6 to 7 in "Making a title in CAMERA mode" on page 97.
(7) Press SET. The title is stored in memory.

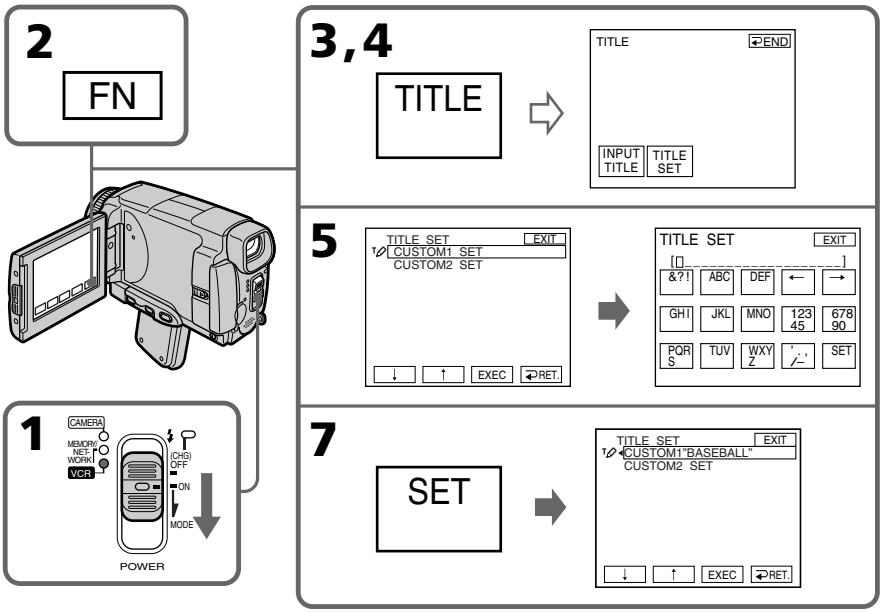

To return to FN

Press EXIT.

To superimpose your own title on a tape

Follow the procedure in "Superimposing a title on starting a recording" on page 92.

The Micro Cassette Memory

The MICROMV cassette automatically records the recording settings and date. When you insert a cassette or set the POWER switch to CAMERA or VCR, the cassette information is displayed for about five seconds.

The cassette information

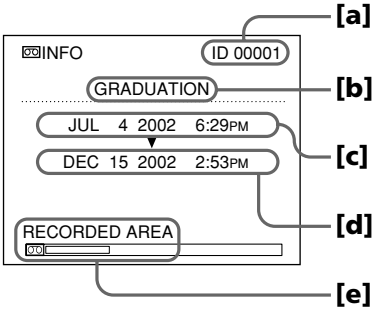

[a] The unique number of each cassette. The camcorder automatically assign this number.
[b] The cassette title set by the TAPE TITLE item in the menu settings (Cassette label).
[c] The first-recorded date in this cassette.
[d] The last-recorded date in this cassette.
[e] The recorded area is indicated by the white bar.

Recorded areas
A blank portion between recorded area is also indicated as a recorded area.

Cassette information
You can turn off the cassette information using the INFODSPL item in in the menu settings.

When " " is flashing
Remove the cassette and insert it again. If the message is still displayed, the Micro Cassette Memory may be corrupted. Replace the cassette with another cassette.

Labeling a cassette

The label can consist of up to 16 characters and is stored in cassette memory. When you insert the labelled cassette and set the POWER switch to CAMERA or VCR, the label is displayed for about five seconds.

(1) Insert the cassette you want to label.
(2) Set the POWER switch to CAMERA or VCR.
(3) Press FN to display PAGE1.
(4) Press MENU, then select TAPE TITLE in in the menu settings, then press EXEC (p. 180). The TAPE TITLE screen appears.
(5) Select a desired character. Repeat pressing a key to select the desired character on the key.
(6) Press → to move the cursor for the next character. Repeat the same procedure as step 5 and 6 to complete the label.
(7) Press SET. The label is stored in memory.

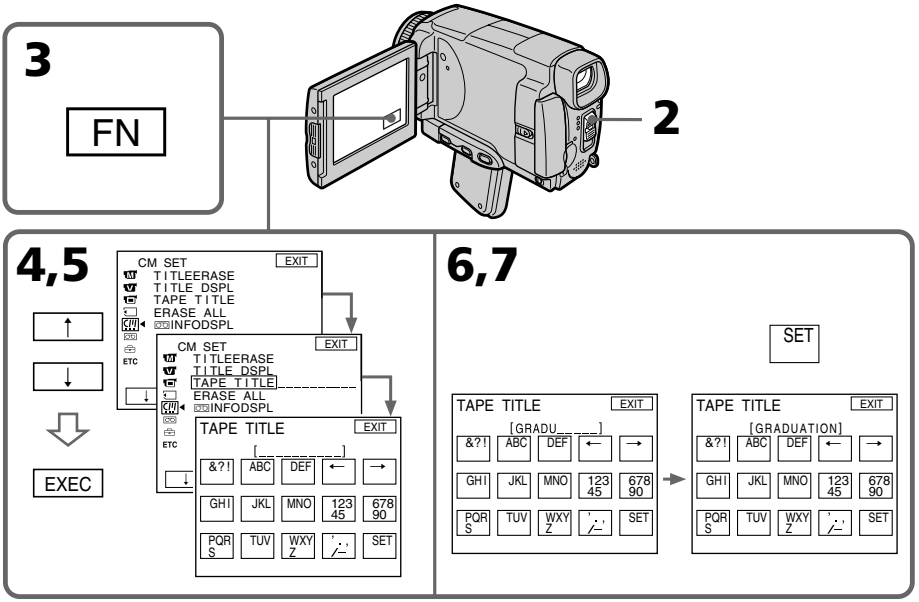

To return to FN

Press EXIT.

To erase the label you have made

Select ← in step 4. The last character is erased.

To change the label you have made

Insert the cassette to change the label, and operate in the same way to make a new label.

If you set the write-protect tab of the tape to lock
You cannot label the tape. Slide the write-protect tab to release the write protection.

To erase the character
Press ←. The last character is erased.

To enter a space
Press →.

To enter the character on the same button in succession
Press → to move the cursor to the next position, and enter the character.

Erasing all the data in Micro Cassette Memory

You can delete all the data (cassette title, date, photo, thumbnail, and cassette information) in Micro Cassette Memory at once.

(1) Set the POWER switch to CAMERA or VCR.
(2) Press FN to display PAGE1.
(3) Press MENU, then select ERASE ALL in in the menu settings, then press EXEC (p. 180).
(4) Press ↑/↓ to select OK, then the press EXEC.
(5) Press ↑/↓ to select EXECUTE, then press EXEC. ERASING flashes on the LCD screen. Once deleting is completed, COMPLETE is displayed.

To return to FN
Press EXIT.

To cancel deleting
Select RETURN in step 4, then press EXEC.

Note
Once you delete all the data in the Micro Cassette Memory, the following operations do not work:
– MULTI-PICTURE SEARCH
– TITLE SEARCH
– DATE SEARCH

Note on the ID number
This item cannot be deleted.

Using a "Memory Stick"– Introduction

You can record and play back still images and moving pictures on a "Memory Stick" supplied with your camcorder. You can easily play back, record or delete images. You can exchange image data with other equipment such as your computer etc., using the USB cable for the "Memory Stick" supplied with your camcorder.

File format

Still image (JPEG)

Your camcorder compresses image data in JPEG format (extension .jpg).

Moving picture (MPEG)

Your camcorder compresses picture data in MPEG format (extension .mpg).

Typical image data file name

Still image

100-0001: This file name appears on the LCD screen of your camcorder.
Dsc00001.jpg: This file name appears on the display of your computer.

Moving picture

MOV10001: This file name appears on the LCD screen of your camcorder.
Mov10001.mpg: This file name appears on the display of your computer.

Using a "Memory Stick"

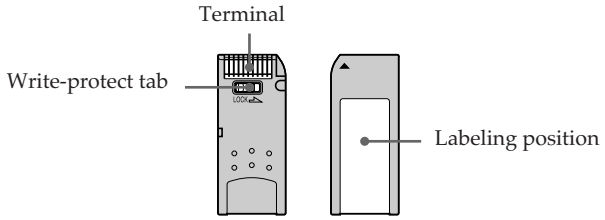

- You cannot record or erase images when the write-protect tab on the "Memory Stick" is set to LOCK.
- The position and shape of the write protect tab may be different depending on the model.
- We recommend backing up important data on the hard disk of your computer.
- Image data may be damaged in the following cases:
  – If you remove the "Memory Stick", turn the power off or detach the battery for replacement when the access lamp is flashing
  – If you use the "Memory Stick" near magnets or magnetic fields such as those of speakers and televisions
- Prevent metallic objects or your finger from coming into contact with the metal parts of the connecting section.
- Stick its label on the labeling position.
- Do not bend, drop or apply strong shock to the "Memory Stick".
- Do not disassemble or modify the "Memory Stick".
- Do not let the "Memory Stick" get wet.
- Do not use or keep the "Memory Stick" in locations that are:
  – Extremely hot such as in a car parked in the sun or under the scorching sun
  – Under direct sunlight
  – Very humid or subject to corrosive gases
- When you carry or store a "Memory Stick", put it in its case.

"Memory Stick" formatted by a computer

"Memory Stick" formatted by Windows OS or Macintosh computers do not have a guaranteed compatibility with this camcorder.

Notes on image data compatibility

- Image data files recorded on the "Memory Stick" by your camcorder conform with the Design Rules for Camera File Systems universal standard established by the JEITA (Japan Electronics and Information Technology Industries Association).
  On your camcorder, you cannot play back still images recorded on other equipment (DCR-TRV890E/TRV900/TRV900E or DSC-D700/D770) that does not conform to this universal standard. (These models are not sold in some areas.)
- If you cannot use the "Memory Stick" that is used with other equipment, format it with this camcorder (p. 179). Note that formatting erases all information on the "Memory Stick."

- "Memory Stick" and MEMORY STICK ™ are trademarks of Sony Corporation.
- All other product names mentioned herein may be the trademarks or registered trademarks of their respective companies.
  Furthermore, "™" and "®" are not mentioned in each case in this manual.

Inserting a "Memory Stick"

Position the ◀ mark on the "Memory Stick" as illustrated, and insert a "Memory Stick" in the "Memory Stick" slot as far as it can go.

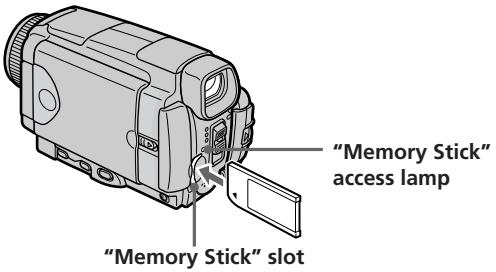

Ejecting a “Memory Stick”

Confirm that the “Memory Stick” access lamp is not lit, then press the “Memory Stick” once lightly.

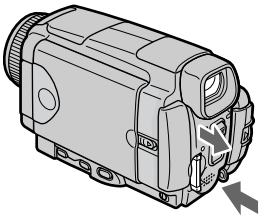

While the “Memory Stick” access lamp is lit or flashing
Do not shake or strike your camcorder because your camcorder is reading the data from the “Memory Stick” or recording the data on the “Memory Stick”. Do not turn the power off , eject a “Memory Stick” or remove the battery pack. Otherwise, image data breakdown may occur.

If MEMORYSTICK ERROR is displayed
Reinsert a “Memory Stick” a few times. The “Memory Stick” may be damaged if the indicator is still displayed. If this occurs, use another “Memory Stick.”

Using a touch panel

Operation buttons for most functions using a “Memory Stick” are displayed on the LCD screen. Press the LCD panel directly with your finger or the supplied stylus (DCR-IP55 only) to operate each function.

(1) Set the POWER switch to MEMORY/NETWORK (DCR-IP55 only).
(2) Slide OPEN in the direction of the ▶ mark indicated on the camcorder to open the LCD panel. The operation buttons appear on the LCD screen. You can switch the memory playback/memory camera mode by pressing PLAY/CAM.
(3) Press FN. The operation buttons of PAGE1 appear on the LCD screen.
(4) Press PAGE2 to go to PAGE2. The operation buttons of PAGE2 appear on the LCD screen.
(5) Press PAGE3 to go to PAGE3. The operation buttons of PAGE3 appear on the LCD screen.
(6) Press a desired operation item.
See relevant pages for each function.

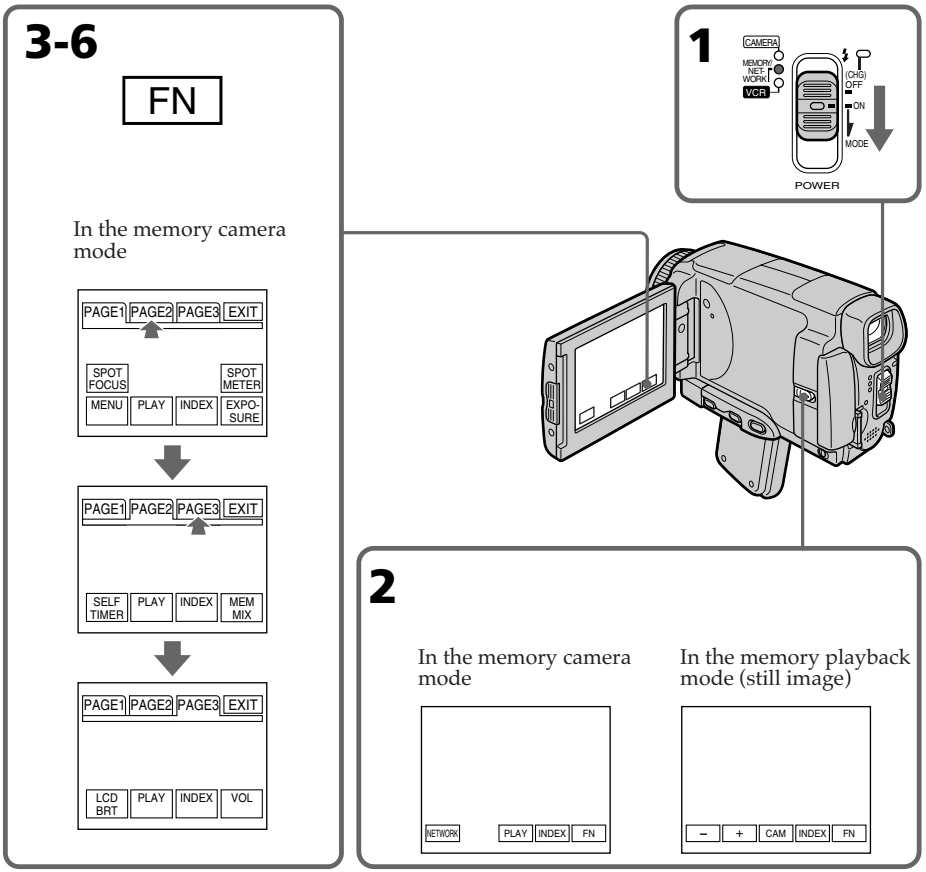

To return to FN
Press EXIT.

To execute settings
Press EXEC or ↵ OK.

To cancel settings
Press ↵ OFF or ↵ AUTO. The display returns to PAGE1, 2 or 3.

Notes

- When using the touch panel, press the LCD screen lightly with your thumb, the supplied stylus (DCR-IP55 only) or index finger supporting the LCD screen from the back side of it or press those buttons lightly with your index finger.
- Do not press the LCD screen with sharp objects other than the stylus supplied (DCR-IP55 only).
- Do not press the LCD screen too hard.
- Do not touch the LCD screen with wet hands.
- If FN is not on the LCD screen, touch the LCD screen lightly to make it appear. You can control the display with DSPL/TOUCH PANEL on your camcorder.
- When operation buttons do not work even if you press them, an adjustment is required (CALIBRATION) (p. 203).
- When the LCD screen gets dirty, use the supplied cleaning cloth.

When executing each item

The green bar appears above the item.

If the items are not available

The color of the items changes to grey.

Touch panel

You can operate with the touch panel through the viewfinder (p. 73).

Press FN to display the following buttons:

In the memory camera mode

PAGE1	SPOT FOCUS, MENU, PLAY, INDEX, SPOT METER, EXPOSURE
PAGE2	SELFTIMER, PLAY, INDEX, MEM MIX
PAGE3	LCD BRT, PLAY, INDEX, VOL

In the memory playback mode

PAGE1	MENU, CAM, INDEX, DELETE, [+], [–]
PAGE2	PB ZOOM, CAM, INDEX, DATA CODE, [+], [–]
PAGE3	LCD BRT, CAM, INDEX, VOL, [+], [–]

Selecting still image quality mode

You can select the image quality mode in still image recording and store the setting in memory. The default setting is SUPER FINE.

(1) Set the POWER switch to MEMORY/NETWORK (DCR-IP55 only) or VCR.
(2) Press FN to display PAGE1.
(3) Press MENU, then select STILL SET in ▭ in the menu settings, then press EXEC (p. 178).
(4) Press ↓/↑ to select QUALITY, then press EXEC.
(5) Press ↓/↑ to select the desired image quality, then press EXEC.

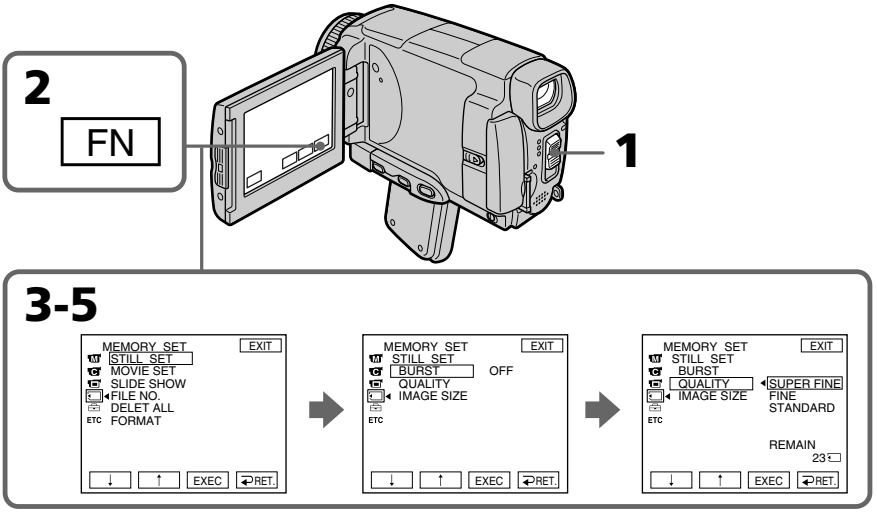

To return to FN

Press EXIT.

Image quality settings

Setting	Meaning
SUPER FINE (SFN)	This is the highest image quality in your camcorder. The number of still images you can record is less than in FINE mode. Super fine images are compressed to about 1/3.
FINE (FINE)	Use this mode when you want to record high quality images. Fine images are compressed to about 1/6.
STANDARD (STD)	This is the standard image quality. Standard images compressed to about 1/10.

Note
In some cases, changing the image quality mode may not affect the image quality, depending on the type of images you are shooting.

Differences in image quality mode
Recorded images are compressed in JPEG format before being stored in memory. The memory capacity allocated to each image varies depending on the selected image quality mode and image size. Details are shown in the table below. (You can select 1152 × 864 or 640 × 480 image size in the menu settings.)

1152 × 864 image size

Image quality mode	Memory capacity
SUPER FINE	About 600 KB
FINE	About 300 KB
STANDARD	About 200 KB

640 × 480 image size

Image quality mode	Memory capacity
SUPER FINE	About 190 KB
FINE	About 100 KB
STANDARD	About 60 KB

Image quality mode indicator
The image quality mode indicator is not displayed during playback.

When you select image quality
The number of images you can shoot in the currently selected image quality appears on the LCD screen.

Setting the moving picture quality mode

There are SUPER FINE, FINE, STANDARD and LIGHTMODE in the moving picture quality mode. The default setting is SUPER FINE.

(1) Set POWER switch to MEMORY/NETWORK for (DCR-IP55 only) or VCR.
(2) Select FN to display PAGE1.
(3) Press MENU, then select MOVIE SET in ▭ in the menu settings, then press EXEC (p. 178).
(4) Press ↓/↑ to select MOVIEMODE, then press EXEC.
(5) Press ↓/↑ to select the desired quality mode, then press EXEC.

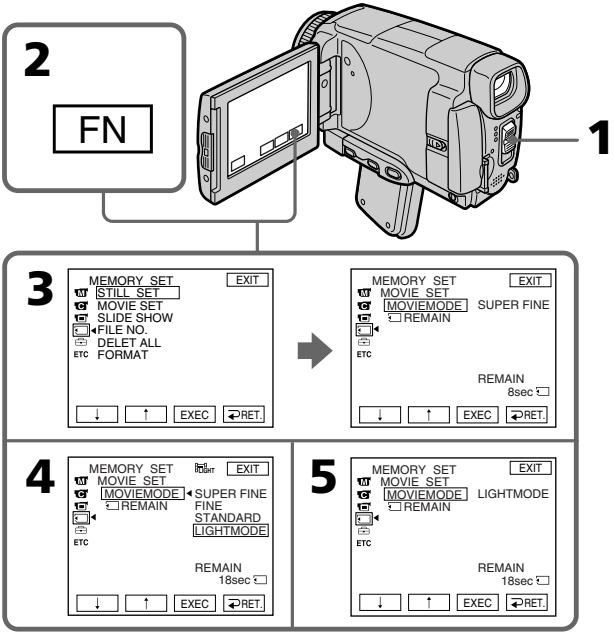

Image quality settings

Setting	Meaning	Frame rate	Bit rate (image and audio)	Indicator (during recording)
SUPER FINE (SFN)	Records moving pictures at 352 × 240.	30 fps	1200 Kbps	SFN
FINE (FINE)	Records moving pictures at 352 × 240.	30 fps	750 Kbps	FINE
STANDARD (STD)	Records moving pictures at 144 × 96.	10 fps	400 Kbps	STD
LIGHTMODE (LIGHT)	Records moving pictures at 144 × 96.	10 fps	200 Kbps	LIGHT

SUPER FINE: You can record moving pictures at the highest quality. This mode is suitable when you intend to modify the pictures using your computer. SUPER FINE is the default setting of the camcorder.
FINE: You can record moving pictures for a longer time than with the SUPER FINE mode, the quality, however, declines slightly.
STANDARD: You can record moving pictures for a longer time than with the FINE mode, the image size, however, is smaller.
LIGHTMODE: Since the file size is small, this mode is suitable for e-mail transmission. The image quality, however, declines.

Frame rate

A moving picture consists of continuous still images. Frame rate indicates the number of images played back in one second. The more the number increases, the more natural the moving picture becomes.

Bit rate

The higher the transmission rate, the more natural the moving picture becomes.

Maximum recording time for moving pictures

Image quality mode	Maximum recording time
SUPER FINE	45 s
FINE	1 min 10 s
STANDARD	2 min 20 s
LIGHTMODE	4 min 40 s

Selecting the size of still image

You can select either of two image sizes.
Still images: 1152 × 864 or 640 × 480. (When the POWER switch is set to CAMERA or VCR, the image size is automatically set to 640 × 480.)
The default setting is 1152 × 864.

(1) Set the POWER switch to MEMORY/NETWORK(DCR-IP55 only).
(2) Press FN to display PAGE1.
(3) Press MENU, then select STILL SET (still image) in in the menu setting, then press EXEC (p. 178).
(4) Press ↓/↑ to select IMAGESIZE, then press EXEC.
(5) Press ↓/↑ to select the desired image size, then press EXEC.
The indicator changes as follows: 1152 ↔ 640

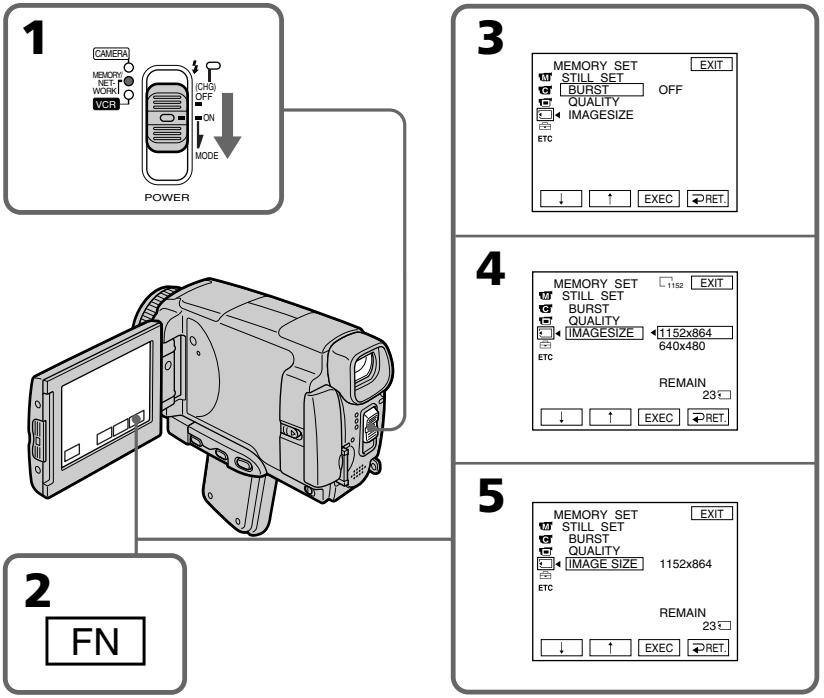

Note
When you play back the still image recorded in the image size of 1152 × 864 with this camcorder on other VCR which you cannot select the image size, a part of image may not be displayed.

Image size settings

Setting	Meaning	Indicator
1152 × 864	Records 1152 × 864 still images.	1152
640 × 480	Records 640 × 480 still images.	640

Approximate number of still images you can record on a "Memory Stick"

The number of images you can record varies depending on which image quality mode you select and the complexity of the subject.

Image quality	Image size	Capacity of "Memory Stick"				
		8 MB (supplied)	16 MB (optional)	32 MB (optional)	64 MB (optional)	128 MB (optional)
SUPER FINE	1152 × 864 640 × 480	12 images 40 images	25 images 80 images	51 images 160 images	100 images 325 images	205 images 650 images
FINE	1152 × 864 640 × 480	25 images 80 images	50 images 160 images	100 images 325 images	205 images 650 images	415 images 1310 images
STANDARD	1152 × 864 640 × 480	37 images 120 images	74 images 240 images	150 images 485 images	300 images 980 images	600 images 1970 images

Approximate time of moving pictures you can record on a "Memory Stick"

The time of moving pictures you can record varies depending on the complexity of the subject.

Quality	Capacity of "Memory Stick"				
	8 MB (supplied)	16 MB (optional)	32 MB (optional)	64 MB (optional)	128 MB (optional)
SUPER FINE	45 s	1 min	3 min	6 min	13 min
FINE	1 min	2 min	5 min	10 min	20 min
STANDARD	2 min	5 min	10 min	20 min	41 min
LIGHTMODE	5 min	10 min	20 min	41 min	82 min

The table above shows approximate number and times of still images and moving pictures you can record on a "Memory Stick" formatted by your camcorder.

Recording still images on a "Memory Stick" – Memory photo recording

You can record still images on a "Memory Stick".

Before operation
Insert a "Memory Stick" into your camcorder.

(1) Set the POWER switch to MEMORY/NETWORK (DCR-IP55 only).
(2) Keep pressing PHOTO lightly. The green ● mark stops flashing, then lights up. The brightness of the image and the focus are adjusted and fixed while your camcorder is targeted at the middle of the image. Recording does not start yet.
(3) Press PHOTO deeper. The image displayed on the LCD screen will be recorded on a "Memory Stick". Recording is complete when the bar scroll indicator disappears.

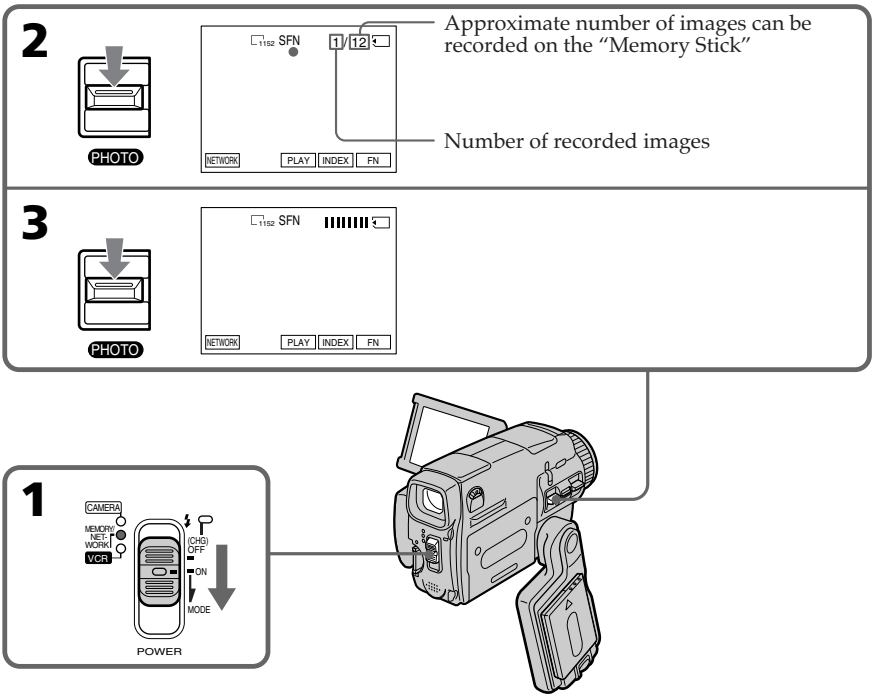

You can record still images on "Memory Stick" in CAMERA mode
For the details, see page 49.

When the POWER switch is set to MEMORY/NETWORK (DCR-IP55 only)
The following functions do not work:
– Wide mode
– Digital zoom
– SteadyShot function
– Super NightShot
– Color Slow Shutter
– Fader
– Picture effect
– Digital effect
– Title
– Sports lesson mode of PROGRAM AE (The indicator flashes.)

While you are recording a still image
You cannot turn off the power or press PHOTO.

When you press PHOTO on the Remote Commander
Your camcorder immediately records the image that is on the LCD screen when you press the button.

When you press PHOTO lightly in step 2
The image momentarily flickers. This is not a malfunction.

The number of still images you can record on a "Memory Stick"
It varies according to the image quality mode and the complexity of the subject.

Recording data
The recording data (date/time or various settings when recorded) are not displayed while recording. However, they are recorded automatically onto the "Memory Stick". To display the recording data, press DATA CODE during playback. You can also use the Remote Commander for this operation (p. 43).

When the POWER switch is set to MEMORY/NETWORK (DCR-IP55 only)
The angle of view is slightly larger compared with the angle of view in CAMERA mode.

Recording images continuously

You can record still images continuously. Before recording, select one of the three modes described below in the menu settings.

NORMAL [a]
Your camcorder shoots up to four still images in 1152 × 864 size or 13 still images in 640 × 480 size at about 0.5 sec intervals. ( )

EXP BRKTG
Your camcorder automatically shoots three images at about 0.5 sec intervals at different exposures. (BRK)

MULTI SCRN [b]
Your camcorder shoots nine still images at about 0.5 sec intervals and displays the images on a single page divided into nine boxes. Still images are recorded in 640 × 480 size. ( )

[a]

[b]

Recording still images on a "Memory Stick" – Memory photo recording

(1) Set the POWER switch to MEMORY/NETWORK (DCR-IP55 only).
(2) Press FN to display PAGE1.
(3) Press MENU, then select STILL SET in in the menu settings, then press EXEC (p. 178).
(4) Press ↓/↑ to select BURST, then press EXEC.
(5) Press ↓/↑ to select the desired settings.
(6) Press EXIT to make the menu settings disappear.
(7) Press PHOTO deeper.

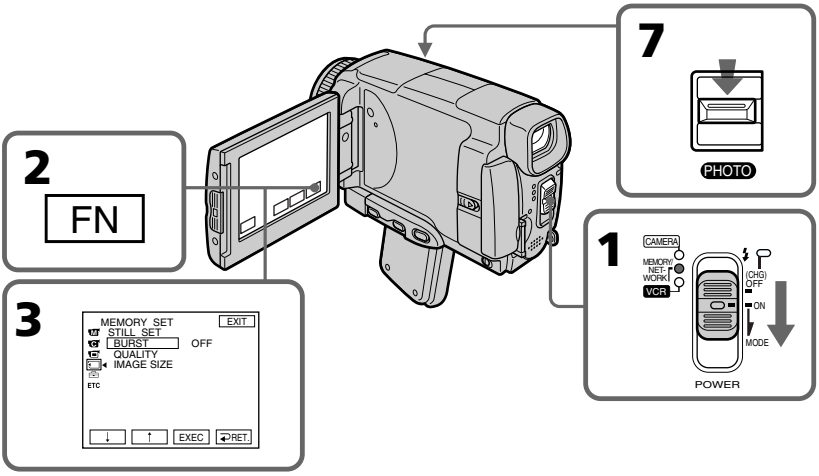

If the "Memory Stick" becomes full

FULL appears on the LCD screen, and you cannot record still images on this "Memory Stick."

The number of still images in continuous shooting
The number of still images you can shoot continuously varies depending on the image size and the capacity of the "Memory Stick."

During recording images continuously
The flash does not work.

When shooting with the self-timer function on the Remote Commander
Your camcorder automatically records up to the maximum recordable number of still images.

If the remaining capacity of the "Memory Stick" is less than for three images.
EXP BRKTG does not work. When you press PHOTO lightly, FULL appears on the screen.

When selecting NORMAL
Recording continues up to the maximum number of still images during pressing PHOTO deeper. Release PHOTO to stop recording.

The effect of EXP BRKTG
The effect of EXP BRKTG may not be noticable on the LCD screen.
We recommend viewing images on TV or the computer to realise the effect.

Recording images with the flash

The flash automatically pops up to strobe. The default setting is auto (no indicator). To change the flash mode, press ϟ (flash) repeatedly until the flash mode indicator appears on the LCD screen.

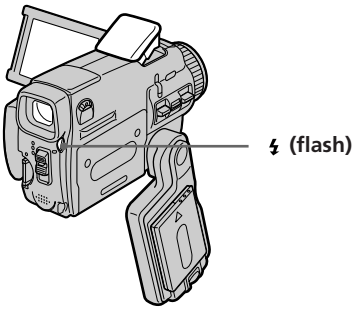

Each press of ϟ (flash) changes the indicator as follows:

👁 → ϟ → ⊛ → AUTO (No indicator)

👁 Auto red-eye reduction:	The flash fires before recording to reduce the red-eye phenomenon.
ϟ Forced flash:	The flash fires regardless of the surrounding brightness.
⊛ No flash:	The flash does not fire.

The amount of flash is automatically adjusted to the appropriate brightness. You can also change FLASH LVL to the desired brightness in the menu settings (p. 175). Try recording various images to find the most appropriate setting for FLASH LVL.

Notes

- The recommended shooting distance using the built-in flash is 0.3 m to 2.5 m (31/32 feet to 8 1/3 feet).
- Attaching the lens hood (optional) or a conversion lens (optional) may block the light from the flash or cause lens shadow to appear.
- Auto red-eye reduction (👁) may not produce the desired effect depending on individual differences, the distance to the subject, the subject not looking at the pre-recording flash or other conditions.
- The flash effect cannot be obtained easily when you use forced flash in a bright location.
- The flash CHG lamp flashes while the power for firing is being charged. After charging is completed, the flash CHG lamp lights up.
- If it is not easy to focus on a subject automatically, for example, when recording in the dark, use HOLOGRAM AF (p. 119) or the focal distance information (p. 71) for focusing manually.

If you leave your camcorder for five or more minutes after disconnecting the power source
Your camcorder returns to the default setting (auto).

The flash does not fire even if you select AUTO and Auto red-eye reduction (◉) during the following operations:
– NightShot
– Exposure
– Spotlight of PROGRAM AE
– Sunset & moon of PROGRAM AE
– Landscape of PROGRAM AE
– Flexible Spot Meter

During recording images continuously
The flash does not fire.

Shooting with an auxiliary light – HOLOGRAM AF

The HOLOGRAM AF is an auxiliary light source used for focusing on subjects in dark places.
Set HOLOGRAM F to AUTO in in the menu settings. (The default setting is AUTO.)
When ON appears on the LCD screen in a dark place, press PHOTO lightly. Then the auxiliary light will automatically emit until the subject is focused.

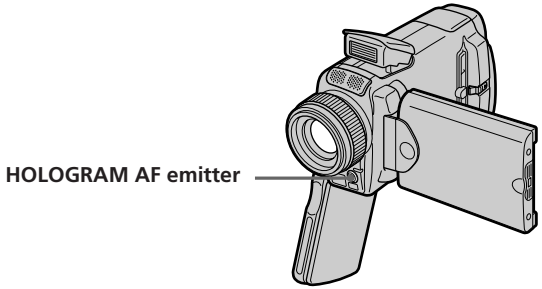

About HOLOGRAM AF

"HOLOGRAM AF (Auto-Focus)," an application of laser holograms, is a new AF optical system that enables still image shooting in dark places. Having gentler radiation than conventional high-brightness LEDs or lamps, the system satisfies Laser Class 1 (*) specification and thus maintains higher safety for human eyes.
No safety problems will be caused by directly looking into the HOLOGRAM AF emitter at a close range. However, it is not recommended to do so, because you may experience such effects like several minutes of image residual and dazzling, that you encounter after looking into a flashlight.

* HOLOGRAM AF satisfies Class 1(time base 30 000 seconds), specified in all of JIS (Japan), IEC(EU), and FDA(US) industry standards.
Complying with these standards identifies the laser product to be safe, under a condition that a human looks at the laser light either directly or even through a lens for 30 000 seconds.

Notes

- A conversion lens (optional) may obstruct the HOLOGRAM AF light and make focusing difficult.
- If enough light does not reach the subject even if the HOLOGRAM AF emitter is emitted (recommended shooting distance is 2.5 m (8 1/3 feet)), the subject will not be focused.
- Focusing may be hampered if the light emitted from the HOLOGRAM AF is blocked by an obstruction.
- Focus is achieved as long as HOLOGRAM AF light reaches to the subject even if its light is slightly out of the middle position of the subject.
- If HOLOGRAM AF light is dim, it sometimes becomes difficult to focus. If this happens, wipe the HOLOGRAM AF emitter with a soft, dry cloth.

The HOLOGRAM AF does not emit when:

– Flash is set to (No flash)
– NightShot is set to ON
– Focusing manually
– Using Spot Focus
– Sunset & moon of PROGRAM AE
– Landscape of PROGRAM AE
– Continuous photo recording

Self-timer memory photo recording

You can record images on the "Memory Stick" with the self-timer. You can also use the Remote Commander for this operation.

(1) Set the POWER switch to MEMORY/NETWORK (DCR-IP55 only).
(2) Press FN and select PAGE2.
(3) Press SELFTIMER in the standby mode.
The (self-timer) indicator appears on the LCD screen.
(4) Press PHOTO deeper.
The self-timer starts counting down from 10 with a beep sound. In the last two seconds of the countdown, the beep sound gets faster, then recording starts automatically.

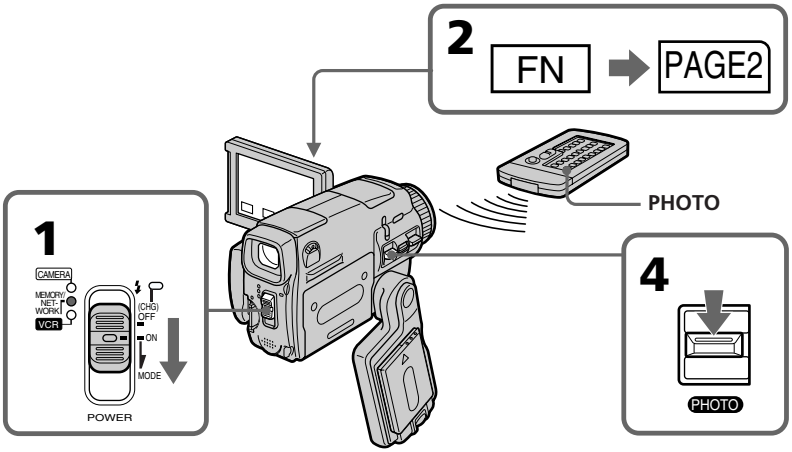

To cancel self-timer recording

Press SELFTIMER so that the (self-timer) indicator disappears from the LCD screen.
You cannot cancel self-timer recording using the Remote Commander.

Note

The self-timer recording mode is automatically canceled when:
– Self-timer recording is finished.
– The POWER switch is set to OFF (CHG) or VCR.

To check the image to be recorded

You can check the image by pressing the PHOTO button lightly, then press it deeper to start the self-timer recording.

Recording an image from a tape as a still image

Your camcorder can read moving picture data recorded on a tape and record it as a still image on a "Memory Stick."
Your camcorder can also take in moving picture data from other equipment through the input connector and record it as a still image on a "Memory Stick."

Before operation
- Insert a recorded tape into your camcorder.
- Insert a "Memory Stick" into your camcorder.

(1) Set the POWER switch to VCR.
(2) Press ▶II. The picture recorded on the tape is played back.
(3) Keep pressing PHOTO lightly until the picture from the tape freezes. CAPTURE appears on the LCD screen. Recording does not start yet.
(4) Press PHOTO deeper. The image displayed on the LCD screen will be recorded on a "Memory Stick." Recording is complete when the bar scroll indicator disappears.

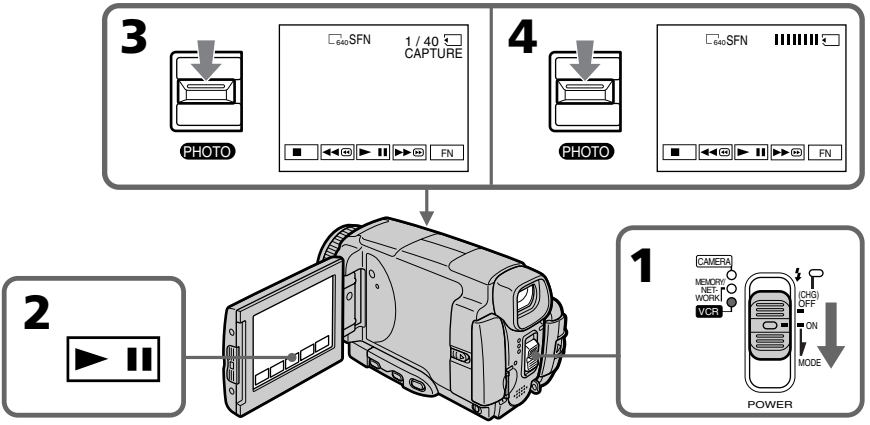

Image size of still images
Image size is automatically set to 640 x 480.

When the "Memory Stick" access lamp is lit or flashing
Do not shake or strike the unit. As well do not turn the power off, eject a "Memory Stick" or remove the battery pack. Otherwise, the image data breakdown may occur.

If MEMORY STICK FORMAT ERROR appears on the LCD screen
The inserted "Memory Stick" is incompatible with your camcorder because its format does not comform with your camcorder. Check the format of the "Memory Stick."

If you press PHOTO lightly in the playback mode
Your camcorder stops momentarily.

Sound recorded on a tape
You cannot record audio from a tape.

Titles which have already been recorded on tapes
You cannot record the titles on the "Memory Stick". The title does not appear while you are recording a still image with PHOTO.

Recorcing date/time
The date/time when it is recorded on a "Memory Stick" is recorded. Various settings are not recorded.

When you press the PHOTO button on the Remote Commander
Your camcorder immediately records the image that is on the LCD screen when you press the button.

Recording a still image from other equipment

Before operation
Set DISPLAY in ETC to LCD in the menu settings (p. 182). (The defalt setting is LCD.)

(1) Set the POWER switch to VCR.
(2) When using the A/V connecting cable, set VIDEOINPUT to the appropriate position depending on the player. (P. 176)
(3) Play back the recorded tape, or turn the TV on to see the desired program. The image of the other equipment is displayed on the LCD screen or in the viewfinder.
(4) At the point where you want to record, follow the steps 3 and 4 on page 122.

Using the A/V connecting cable

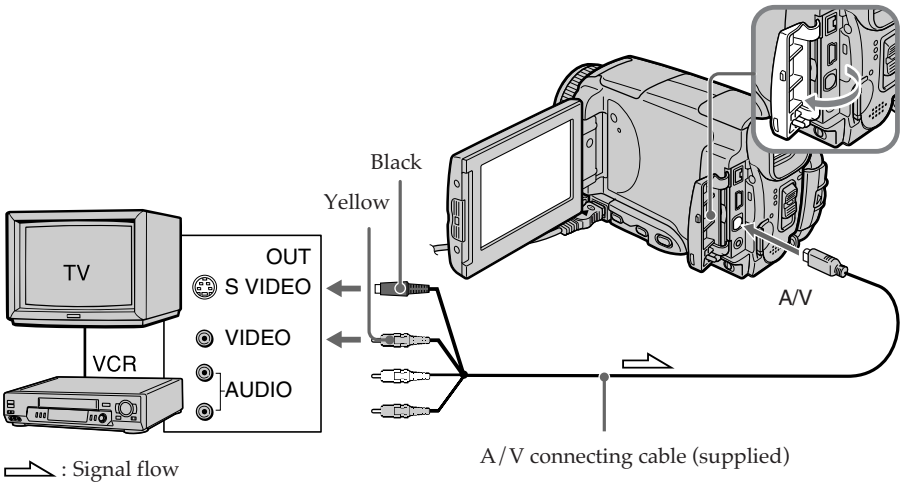

Connect the yellow plug of the A/V connecting cable to the video jack on the VCR or the TV.

If your TV or VCR has an S video jack
Pictures can be reproduced more faithfully by using an S video cable.
With this connection, you do not need to connect the yellow (video) plug of the A/V connecting cable.
Connect an S video cable to the S video jacks of both your camcorder and the TV or VCR. This connection produces higher quality MICROMV format pictures.

Using the i.LINK cable

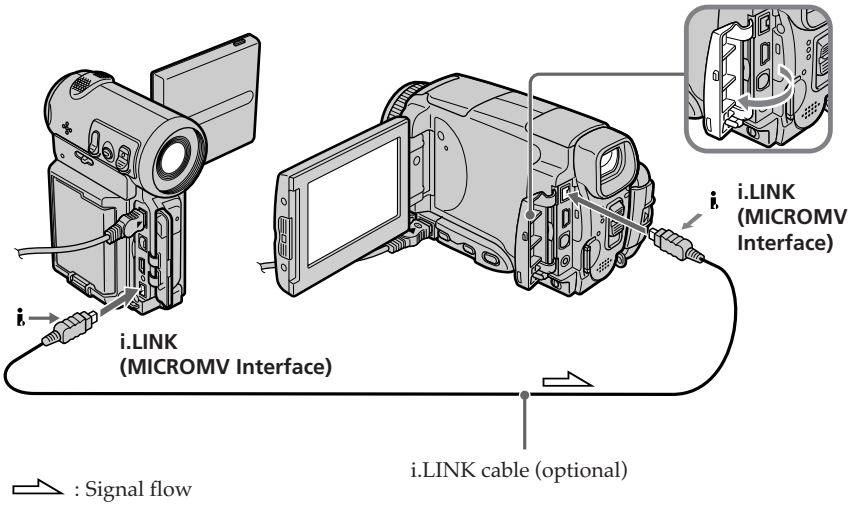

Note
In the following instances, recording is interrupted, or REC ERROR appears and recording cannot be carried out:
Record distortion-free images.
– When recording from a tape in poor recording condition, for example, a tape that is worn out from repeated dubbing.
– When attempting to record images that are distorted due to poor radio wave reception when a TV tuner is in use.

Superimposing a still image in a "Memory Stick" on an image – MEMORY MIX

You can superimpose a still image you have recorded on a "Memory Stick" on top of the moving picture you are recording.
You can record the superimposed images on a tape or a "Memory Stick." (However, you can record only superimposed still images on the "Memory Stick.")

M. CHROM (Memory chromakey)
You can swap only the blue area of a still image such as an illustration or a frame with a moving picture.

M. LUMI (Memory luminancekey)
You can swap the brighter area of a still image (such as a handwritten illustration or a title) with a moving picture. To use this function, we recommend recording a title on a "Memory Stick" before a trip or event.

C. CHROM (Camera chromakey)
You can superimpose a moving picture on top of a still image such as an image which can be used as background. Shoot the subject against a blue background. Only the blue area of the moving picture will be swapped with a still image.

M. OVERLAP* (Memory overlap)
You can make a moving picture fade in on top of a still image.

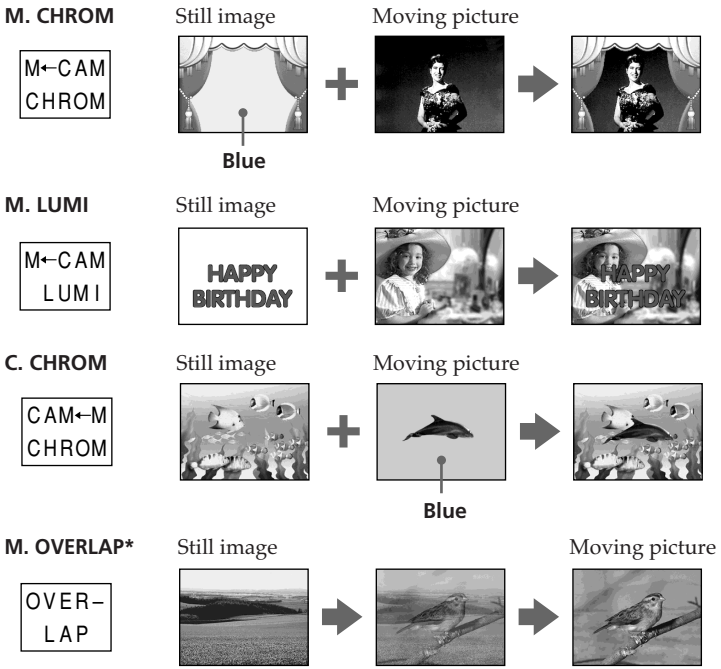

* The superimposed image using Memory overlap function can be recorded on tapes only.