Recording a superimposed image to tape

Before operation
- Insert a tape for recording into your camcorder.
- Insert a “Memory Stick” recorded with still images into your camcorder.

(1) Set the POWER switch to CAMERA.
(2) In the standby mode, press FN and select PAGE2.
(3) Press MEM MIX. The last image recorded on the “Memory Stick” appears on the right lower part of the LCD screen.
(4) Press –/+ on the right lower corner of the LCD screen to select the still image which you want to superimpose.
– : to see the previous image
+ : to see the next image
(5) Press a desired mode. The still image is superimposed on the moving picture.
(6) Press –/+ on the left lower corner of the LCD screen to adjust the effect, then press ↩ OK to return to PAGE2.

M. CHROM – The color (blue) scheme of the area in the still image which is to be swapped with a moving image
M. LUMI – The color (bright) scheme of the area in the still image which is to be swapped with a moving image
C. CHROM – The color (blue) scheme of the area in the moving image which is to be swapped with a still image
M. OVERLAP – No adjustment necessary

The fewer bars there are on the LCD screen, the stronger the effect.

(7) Press EXIT to return to FN.
(8) Press START/STOP to start recording.

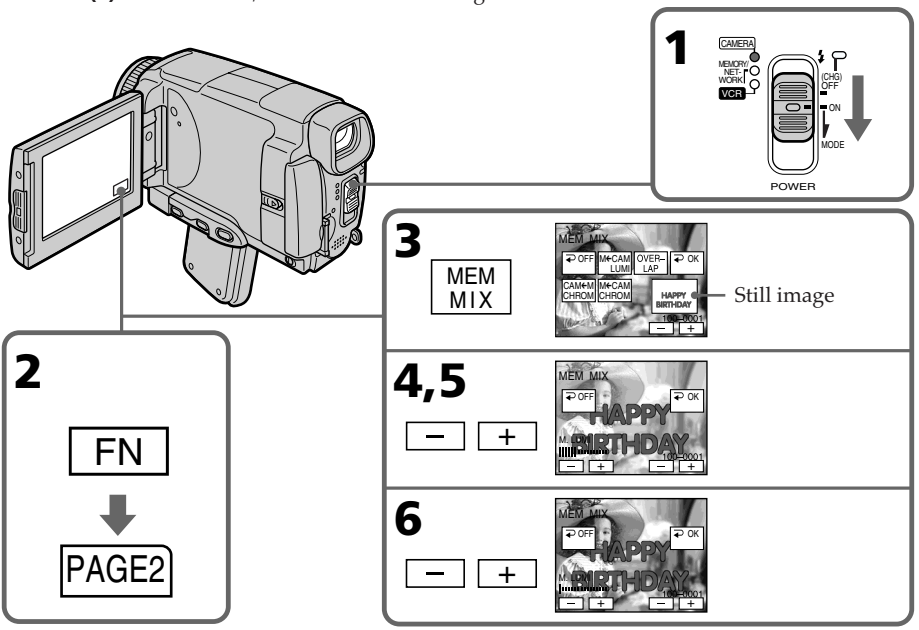

To change the still image to be superimposed

Press –/+ on the right lower corner before step 6.

To cancel MEMORY MIX

Press ↩ OFF. The display returns to PAGE2.

Notes

- You cannot use the MEMORY MIX function for moving pictures recorded on the "Memory Stick".
- When the overlapping still image has a large amount of white, the thumbnail image of the picture may not be clear.
- During recording you cannot reselect the mode setting. Press ↩ OFF to return to PAGE2.

Image data modified on your computer or shot with other equipment

You may not be able to play modified images back with your camcorder.

To record a still image on a tape as it is

In the M. LUMI mode press –/+ to increase the bar indicator to the maximum position.

When you select M. OVERLAP

You cannot change the still image. Press ↩ OFF to cancel the M.OVERLAP mode, then select the image again.

Recording a superimposed image to a "Memory Stick" as a still image

Before operation

Insert a recorded "Memory Stick" into your camcorder.

(1) Set the POWER switch to MEMORY/NETWORK (DCR-IP55 only).
(2) In the standby mode, press FN and select PAGE2.
(3) Press MEM MIX. The last image recorded on the "Memory Stick" appears on the left corner of the LCD screen.
(4) Press –/+ on the right lower corner of the screen to select the still image which you want to superimpose.
– : to see the previous image
+ : to see the next image
(5) Press a desired mode. The still image is superimposed on the moving picture.
(6) Press –/+ on the left lower corner of the LCD screen to adjust the effect, then press ↩ OK. The display returns to PAGE2.

M. CHROM	–	The color (blue) scheme of the area in the still image which is to be swapped with a moving image
M. LUMI	–	The color (bright) scheme of the area in the still image which is to be swapped with a moving image
C. CHROM	–	The color (blue) scheme of the area in the moving image which is to be swapped with a still image

The fewer bars there are on the screen, the stronger the effect.

(7) Press EXIT to return to FN.
(8) Press PHOTO deeper to start recording.
The image displayed on the LCD screen will be recorded on a "Memory Stick."
Recording is complete when the bar scroll indicator disappears.

Superimposing a still image in a "Memory Stick" on an image – MEMORY MIX

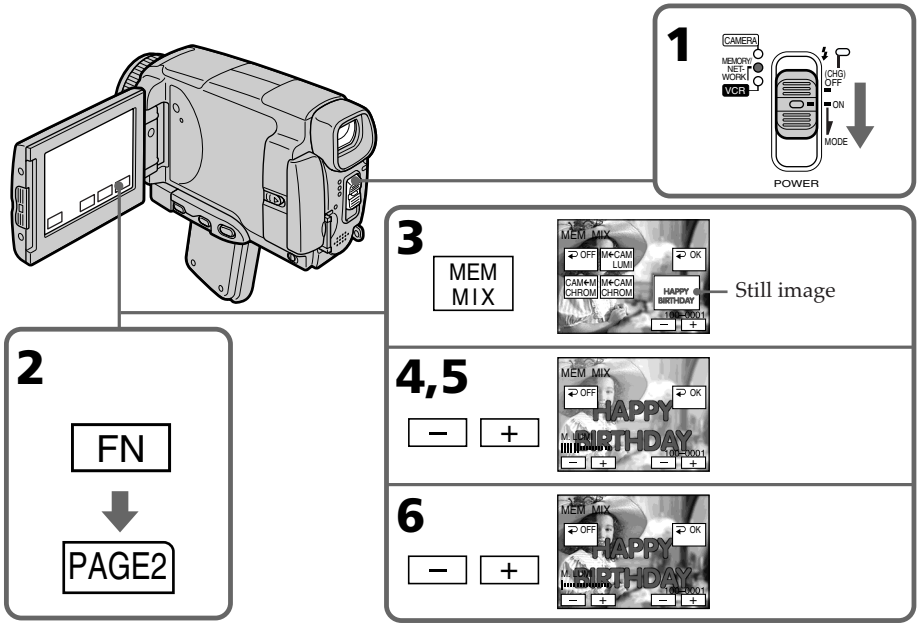

To change the still image to be superimposed

Press –/+ on the right lower corner before step 6.

To cancel MEMORY MIX

Press ↩ OFF. The display returns to PAGE2.

Notes

- You cannot use MEMORY MIX function for moving pictures recorded on the "Memory Stick".
- If the overlapping still image has a large amount of white, the thumbnail image of the picture may not be clear.
- You cannot reselect the mode. Press ↩ OFF again to return to PAGE2.

Image size of still images

Image size is automatically set to 640 × 480.

Image data modified with your computers or shot with other equipment

You may not be able to play them back with your camcorder.

When recording images on a "Memory Stick" using MEMORY MIX

The PROGRAM AE does not work.

The "Memory Stick" supplied with your camcorder stores 20 images:

– For M. CHROM: 18 images (such as a frame) 100-0001~100-0018
– For C. CHROM: 2 images (such as a background) 100-0019~100-0020

Sample images

Sample images stored in the "Memory Stick" supplied with your camcorder are protected (p. 146).

Recording moving pictures on the "Memory Stick" – MPEG movie recording

You can record moving pictures with sound on the "Memory Stick".

Before operation
Insert a "Memory Stick" into your camcorder.

(1) Set the POWER switch to MEMORY/NETWORK (DCR-IP55 only).
(2) Press START/STOP. Your camcorder starts recording. The camera recording lamp located on the front of your camcorder lights up.

Quality mode	recordable time
SUPER FINE	Maximum 45 s
FINE	Maximum 1 min 10 s
STANDARD	Maximum 2 min 20 s
LIGHTMODE	Maximum 4 min 40 s

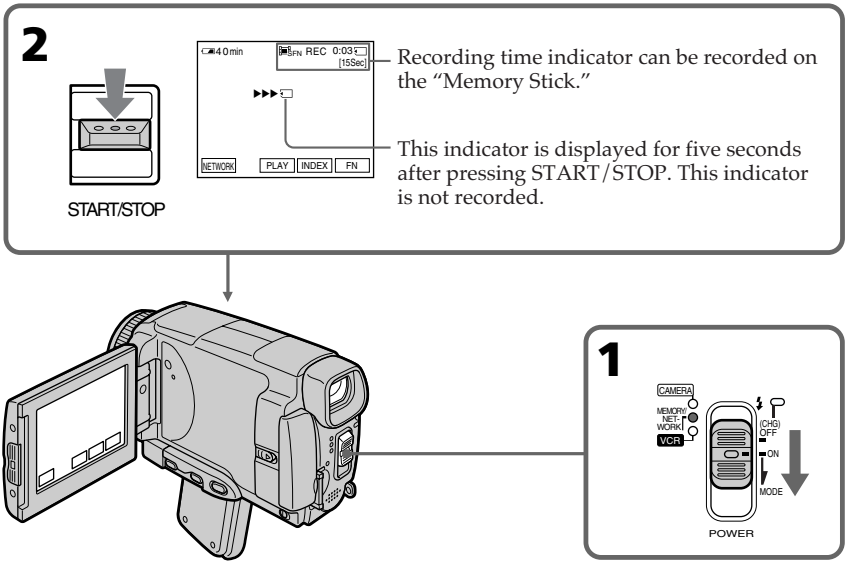

To stop recording
Press START/STOP.

Note
Sound is recorded in monaural.

MPEG movie recorded with the camcorder:
- Is MPEG MOVIE AD
- Cannot be played back on other digital still cameras and digital video camera recorders.
- Cannot be output from the i.LINK (MICROMV Interface).

When the POWER switch is set to MEMORY/NETWORK (DCR-IP55 only)
The following functions do not work:
– Wide mode
– Digital zoom
– SteadyShot function
– Super NightShot
– Color Slow Shutter
– Fader
– Picture effect
– Digital effect
– Title
– Sports lesson of PROGRAM AE (The indicator flashes.)

When using an external flash (optional)
Turn the power of the external flash off when recording moving pictures on the "Memory Stick". Otherwise, the charging sound of the flash may be recorded.

Recording date/time
The date/time are not displayed while recording. However, they are automatically recorded onto the "Memory Stick". To display the recording date/time, press DATA CODE during playback. Various settings cannot be recorded. You can also use the Remote Commander for this operation (p. 43).

During recording on the "Memory Stick"
Do not eject the cassette tape from your camcorder. While ejecting the tape, sound is not recorded on the "Memory Stick."

When the POWER switch is set to MEMORY/NETWORK (DCR-IP55 only)
The angle of view is slightly larger compared with the angle of view in CAMERA mode.

Self-timer MPEG movie recording

You can record images on the "Memory Stick" with the self-timer. You can also use the Remote Commander for this operation.

(1) Set the POWER switch to MEMORY/NETWORK (DCR-IP55 only).
(2) Press FN and select PAGE2.
(3) Press SELFTIMER in the standby mode.
The ⏲ (self-timer) indicator appears on the LCD screen.
(4) Press START/STOP.
Self-timer starts counting down from 10 with a beep. In the last two seconds of the countdown, the beep gets faster, then recording starts automatically.

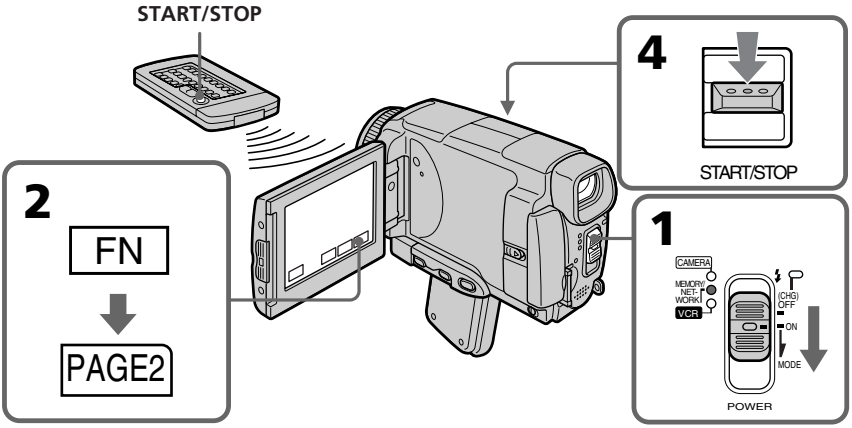

To stop the count down

Press START/STOP.
To restart the countdown, press START/STOP again.

To cancel the self-timer recording

Press SELFTIMER so that the ⏲ (self-timer) indicator disappears on the LCD screen.
You cannot cancel the self-timer recording using the Remote Commander.

Note
The self-timer recording mode is automatically canceled when:
– Self-timer recording is finished.
– The POWER switch is set to OFF (CHG) or VCR.

Recording a picture from a tape as a moving picture

Your camcorder can read moving picture data recorded on a tape and record it as a moving picture on a "Memory Stick." Your camcorder can also take in moving picture data through the input connector and record it as a moving picture on a "Memory Stick."

Before operation

- Insert a recorded tape into your camcorder.
- Insert a "Memory Stick" into your camcorder.

(1) Set the POWER switch to VCR.
(2) Press ▶II. The picture recorded on the tape is played back.
(3) Press START/STOP at the scene where you want to start recording from.

Quality mode	recordable time
SUPER FINE	Maximum 45 s
FINE	Maximum 1 min 10 s
STANDARD	Maximum 2 min 20 s
LIGHTMODE	Maximum 4 min 40 s

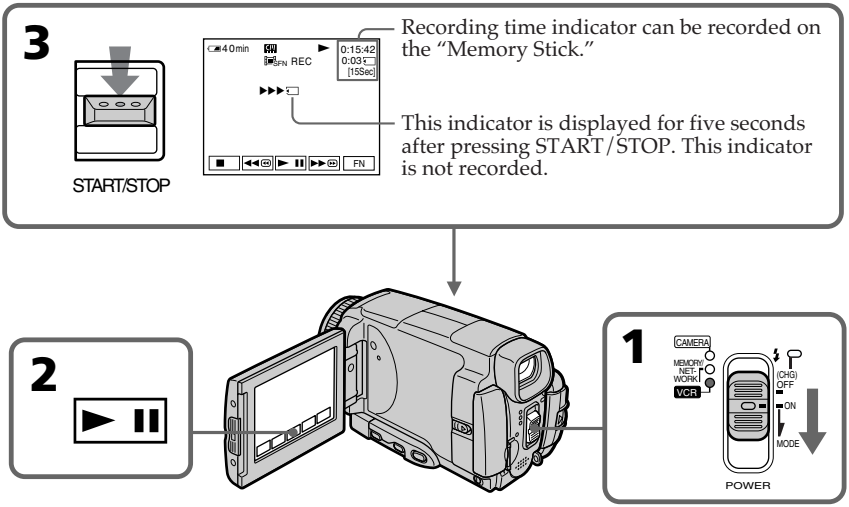

To stop recording

Press START/STOP.

Note

Sound recorded in stereo is converted to monaural sound when recording from a tape.

When the "Memory Stick" access lamp is lit or flashing
Do not shake or strike the unit. As well do not turn the power off, eject a "Memory Stick" or remove the battery pack. Otherwise, the image data breakdown may occur.

Titles cannot be recorded
You cannot record them on the "Memory Stick". The title does not appear while you are recording a moving picture with START/STOP.

Various settings recorded on a tape
They cannot be recorded on the "Memory Stick". The date/time when it is recorded on the "Memory Stick" is recorded.

Recording a moving picture from other equipment

Before operation
Set DISPLAY to LCD in the menu settings (p. 182). (The default setting is LCD.)

(1) Set the POWER switch to VCR.
(2) When using the A/V connecting cable, set VIDEOINPUT to the appropriate position depending on the player. (p. 176)
(3) Play back the recorded tape, or turn the TV on to see the desired program. The image of the other equipment is displayed on the LCD screen or in the viewfinder.
(4) Press START/STOP at the scene where you want to start recording from.

Using the A/V connecting cable

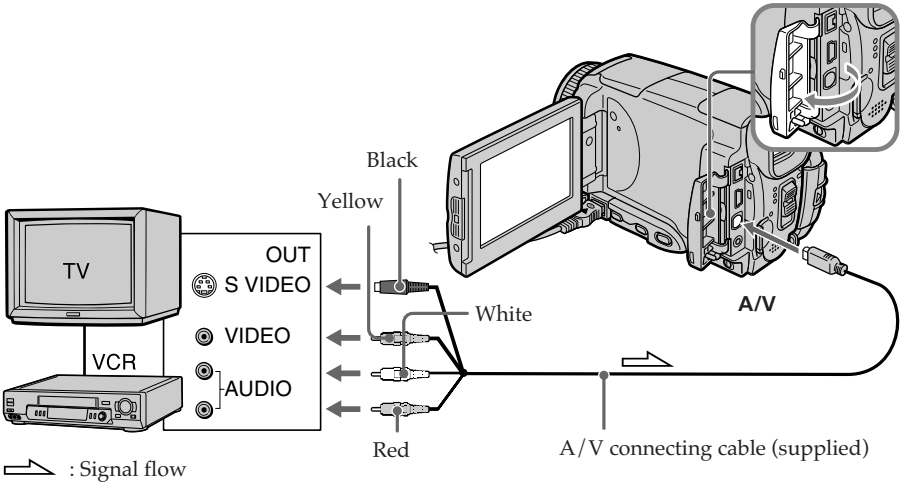

Connect the yellow plug of the A/V connecting cable to the video jack on the VCR or the TV.

If your TV or VCR has an S video jack
Pictures can be reproduced more faithfully by using an S video cable.
With this connection, you do not need to connect the yellow (video) plug of the A/V connecting cable.
Connect an S video cable to the S video jacks of both your camcorder and the TV or VCR. This connection produces higher quality MICROMV format pictures.

Using the i.LINK cable

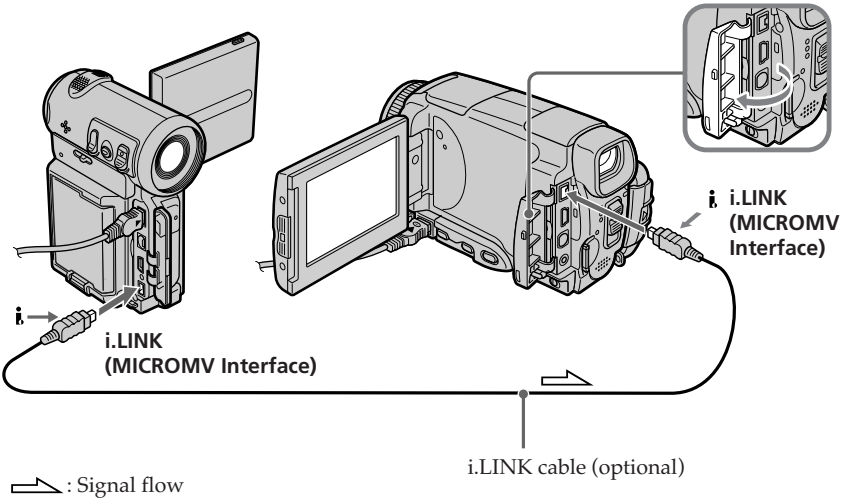

Note
In the following instances REC ERROR appears and recording is canceled:
– When recording from a tape in poor recording condition, for example, a tape that is worn out from repeated dubbing.
– When attempting to record images that are distorted due to poor radio wave reception when a TV tuner is in use.
– When the input signal is cut off.

During recording on a "Memory Stick"
Do not eject the cassette tape from your camcorder. During ejecting the tape, sound is not recorded on a "Memory Stick."

Viewing a still image – Memory photo playback

You can play back still images recorded on a "Memory Stick." You can also play back six images including moving pictures on single screen arranged in the same order as a "Memory Stick" by selecting the index screen.

Before operation
Insert a "Memory Stick" into your camcorder.

(1) Set the POWER switch to MEMORY/NETWORK (DCR-IP55 only) or VCR.
(2) Press PLAY or PB "Memory Stick." The last recorded image is displayed.
(3) Press –/+ to select the desired still image.
– : to see the previous image
+ : to see the next image

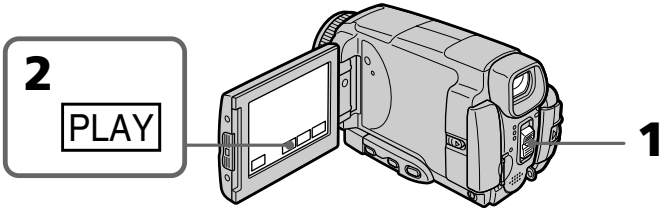

To stop memory photo playback

Press CAM or VCR, or MEMORY PLAY on the Remote Commander.

Note
You may not be able to play back images with your camcorder:
– when playing back image data modified on your computers.
– when playing back image data shot with other equipment.

Playback still images recorded on the "Memory Stick"
Playback images are not output from the i.LINK (MICROMV Interface).

File name
- The directory number may not be displayed and only the file name may be displayed if the structure of the directory does not conform to the DCF standard.
- DIRECTORY ERROR may appear on the LCD screen if the structure of the directory does not conform to the DCF standard. If this message appears, you can play back images but cannot record them on the "Memory Stick."
- The file name flashes on the LCD screen if the file is corrupted or the file is unreadable.

To play back recorded images on a TV screen

- Connect your camcorder to the TV with the A/V connecting cable supplied with your camcorder before the operation.
- When operating memory photo playback on a TV or on the LCD screen, the image quality may appear to have deteriorated. This is not a malfunction. The image data is as good as ever.
- Turn the audio volume of the TV down before operation, or noise (howling) may be output from the TV speakers.

Still image

You can select still images also with –/+ on PAGE1, PAGE2 or PAGE3.

Screen indicators during still image playback

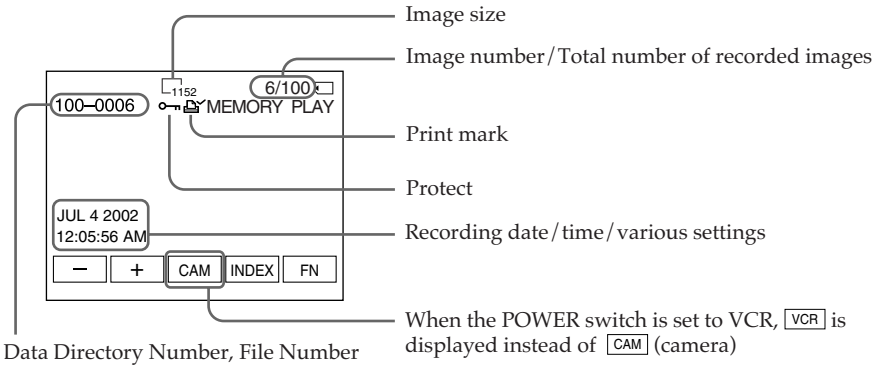

When no images are recorded on the "Memory Stick"

When you press MEMORY PLAY on the Remote Commander, NO FILE appears.

Recording data

To display the recording data (date/time or various settings when recorded), press DATA CODE during playback. You can also use the Remote Commander for this operation (p. 43).

To make LCD screen indicators disappear

Press DSPL/TOUCH PANEL.

Playing back 6 recorded images at a time (index screen)

You can play back six recorded images at a time. This function is especially useful when searching for a particular image.

(1) Set the POWER switch to MEMORY/NETWORK (DCR-IP55 only) or VCR.
(2) In MEMORY/NETWORK mode, go to step 3.
In VCR mode, press PB.
(3) Press INDEX to display the index screen.

A red ▶ mark appears above the image that is displayed before changing to the index screen mode.
← : to display the previous six images
→ : to display the following six images
You can also display the previous or following six images with +/– on the Remote Commander.

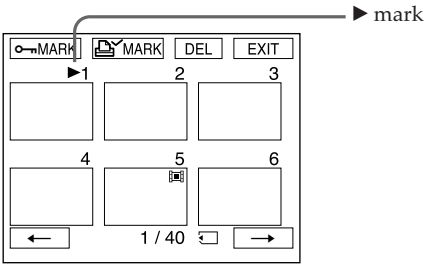

To return to FN
Press EXIT.

To return to the normal playback screen (single screen)
Press the image you want to display.

Note
When displaying the index screen, the number appears above each image. This indicates the order in which images are recorded on the "Memory Stick." These numbers are different from the data file names (p. 103).

Image data modified with personal computers or shot with other equipment
These files may not be displayed on the index screen.

Viewing a moving picture – MPEG movie playback

You can play back moving pictures recorded on a "Memory Stick." You can also play back 6 images including still images in order at a time by selecting the index screen.

Before operation
Insert a "Memory Stick" into your camcorder.

(1) Set the POWER switch to MEMORY/NETWORK (DCR-IP55 only) or VCR.
(2) Press PLAY or PB. The last recorded image is displayed.
(3) Press –/+ to select the desired moving pictures.
– : to see the previous picture
+ : to see the next picture
(4) Press MPEG ► II to start playback.
(5) Press VOL– or VOL+ to adjust the volume.
VOL– : to decrease the volume.
VOL+ : to increase the volume.
When the LCD screen is closed, no sound is heard.

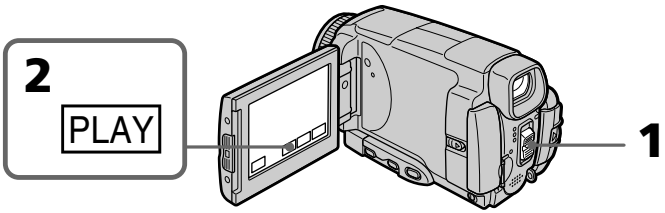

To pause MPEG movie playback

Press MPEG ► II. To resume playback, press MPEG ► II again.

Note
You may not be able to play back images with your camcorder:
– when playing back image data modified on your computers.
– when playing back image data shot with other equipment.

MPEG movie recorded with the camcorder:
- Is MPEG MOVIE AD
- Cannot be played back on other digital still cameras and digital video camera recorders.
- Cannot be output from the i.LINK (MICROMV Interface).

To play back recorded images on a TV screen
- Connect your camcorder to the TV with the A/V connecting cable supplied with your camcorder before operation.
- Turn the audio volume of the TV down before operation, or noise (howling) may be output from the TV speakers.

Moving picture
You can select moving pictures also with –/+ on PAGE1, PAGE2 or PAGE3.

When no moving picture is recorded on a "Memory Stick"
When you press MEMORY PLAY on the Remote Commander, NO FILE appears.

To change the screen size

Press SCRN SIZE. The screen size changes as follows:

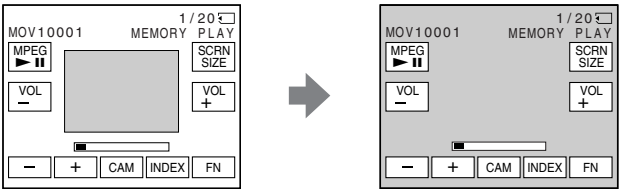

Note on the screen size

- The picture may not be displayed at the middle of the LCD screen, depending on the movie.
- Even if you switch the screen size, the picture may not be displayed full-screen size, depending on the movie.

Screen indicators during moving picture playback

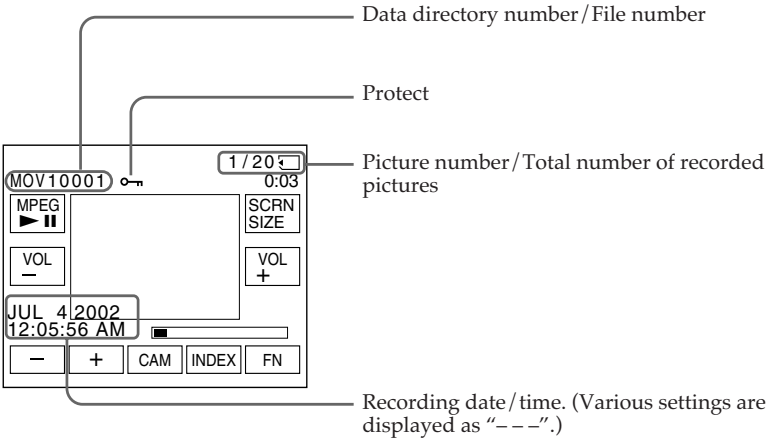

Recording date/time

To display the recording date/time, press DATA CODE during playback. You can also use the Remote Commander for this operation (p. 43).

To make screen indicators disappear

Press DSPL/TOUCH PANEL.

Copying still images recorded on the "Memory Stick" to a tape

You can copy still images recorded on the "Memory Stick" and record them to a tape. You can also use the Remote Commander for this operation.

Before operation
- Insert a tape for recording into your camcorder.
- Insert a "Memory Stick" into your camcorder.

(1) Set the POWER switch to VCR.
(2) Using the video control buttons, search a point where you want to record the desired images and stop playback.
(3) Press PB. The last recorded image is displayed.
(4) Press –/+ to select the desired image.
– : to see the previous image
+ : to see the next image
(5) Press FN and select PAGE3.
(6) Press REC CTRL, then REC START.
Copying starts.
Press REC PAUSE at the scene where you want to stop recording.
(7) If you have more to copy, repeat steps 4 to 6.

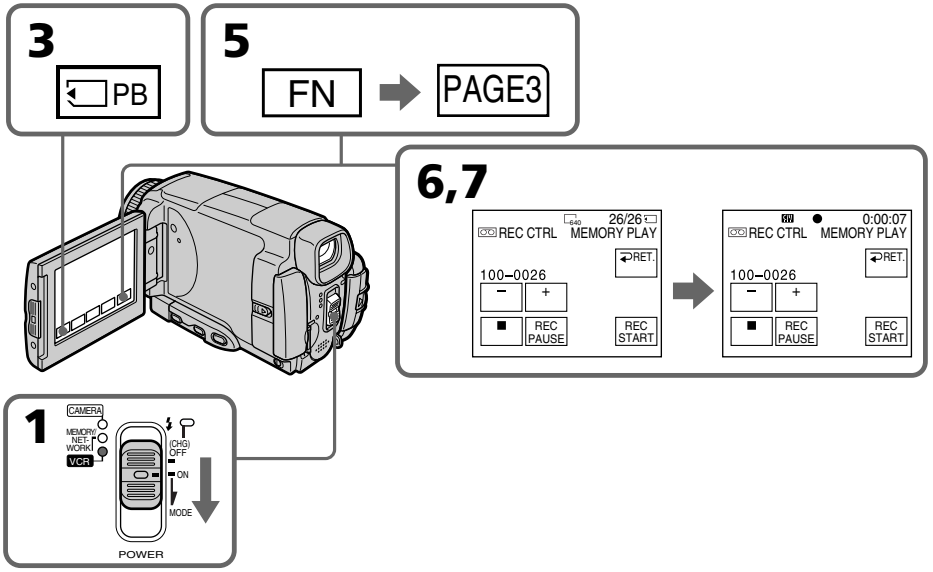

To stop copying in the middle

Press ■ on the LCD screen or STOP on the Remote Commander.

Notes

- You cannot copy MPEG movie files to the tape.
- You cannot copy the index screen to the tape.

During copying

You cannot operate the following functions:

– MEMORY PLAY
– MEMORY INDEX
– MEMORY DELETE
– MEMORY –/+
– MEMORY MIX

Image data modified on your computers or shot with other equipment

You may not be able to copy modified images with your camcorder.

Enlarging still images recorded on the "Memory Stick" – Memory PB ZOOM

You can enlarge still images recorded on a "Memory Stick". You can select and view a desired part from the enlarged still image. Also, you can copy the desired part of the enlarged still image to the "Memory Stick".

Before operation
Insert a "Memory Stick" into your camcorder.

(1) In the memory playback mode, press FN and select PAGE2.
(2) Press PB ZOOM. PB ZOOM screen appears.
(3) Press the area that you want to enlarge in the frame on the PB ZOOM screen.
The area you pressed moves to the center of the LCD screen, and the playback image is enlarged at twice the size. If you press the other area, the area moves to the center of the LCD screen.
(4) Adjust the zoom ratio by the zoom lever.
You can select the image from 1.1 times up to five times its size
"W" side: Decrease the zoom ratio.
"T" side: Increase the zoom ratio.

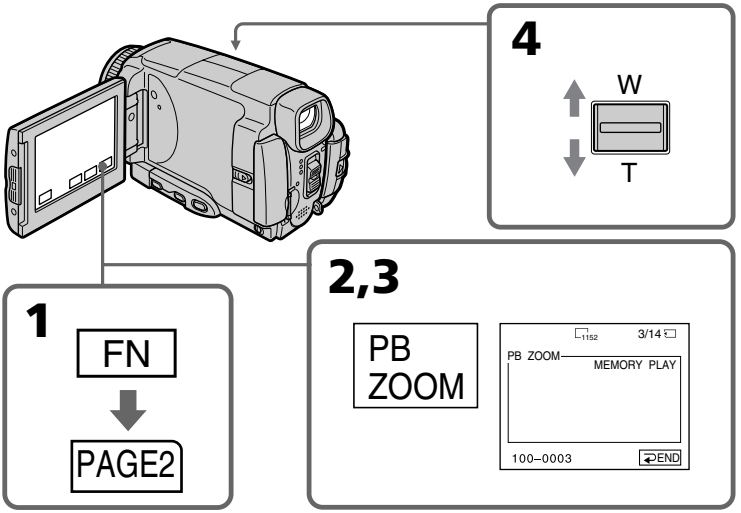

To cancel the Memory PB ZOOM function
Press ⮐ END.

Pictures in the Memory PB ZOOM mode
Pictures are not output through the i.LINK (MICROMV Interface).

In the Memory PB ZOOM mode
If you press DSPL/TOUCH PANEL button, the frame on the Memory PB ZOOM screen disappears. You cannot move the part you pressed to the center of the LCD screen.

Edge of an enlarged image
The edge of an enlarged image cannot be displayed in the center of the LCD screen.

Moving pictures recorded on the "Memory Stick"
The PB ZOOM function does not work.

To record an image processed by PB ZOOM on the "Memory Stick"
Press the PHOTO button to record the image processed by PB ZOOM. (Images are recorded at 640 × 480 size.)

Playing back images continuously – SLIDE SHOW

Your camcorder can automatically play back images in sequence. This function is especially useful when checking recorded images or during a presentation.

Before operation
Insert a "Memory Stick" into your camcorder.

(1) Set the POWER switch to MEMORY/NETWORK (DCR-IP55 only).
(2) Press FN to display PAGE1.
(3) Press MENU, then select SLIDE SHOW in ▭ in the menu settings (p. 179). And press EXEC.
(4) Press START. Your camcorder plays back the images recorded on a "Memory Stick" in sequence.

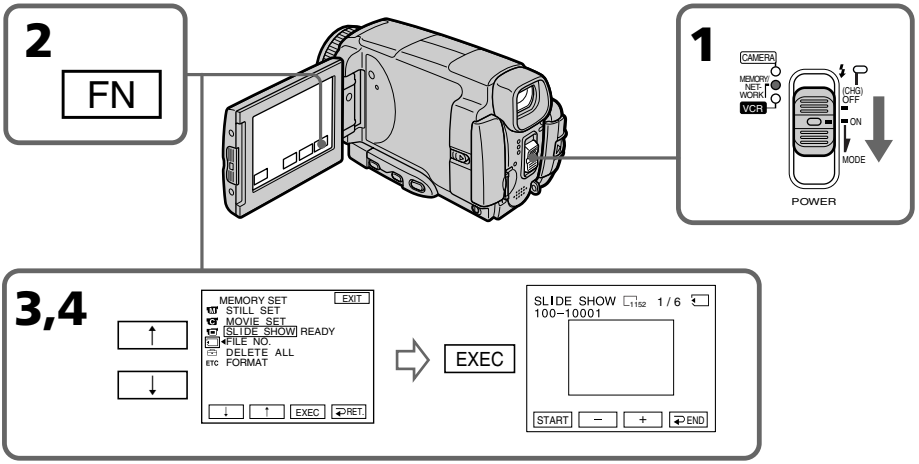

To stop the slide show
Press ↩ END.

To pause during a slide show
Press PAUSE.

To return to FN
Press ↩ END, then EXIT.

To start the slide show from a particular image
Select the desired image using –/+ buttons before step 4.

To view the recorded images on TV
Connect your camcorder to a TV with the A/V connecting cable supplied with your camcorder (p. 47) before operation.

If you change the "Memory Stick" during operation
The slide show does not operate. If you change the "Memory Stick," be sure to follow the steps again from the beginning.

To play the slide show with the screen indicators turned off
After step 3, press DSPL/TOUCH PANEL to turn off the screen indicators. You can start/pause the slide show using MEMORY PLAY on the Remote Commander. To end the slide show, press DSPL/TOUCH PANEL again, then press ↩ END.

When there are no images on the "Memory Stick"
NO FILE appears.

Preventing accidental erasure – Image protection

To prevent accidental erasure of important images, you can protect selected images.

Before operation
Insert a "Memory Stick" into your camcorder.

(1) Set the POWER switch to MEMORY/NETWORK (DCR-IP55 only) or VCR.
(2) In MEMORY/NETWORK mode, go to step 3.
In VCR mode, press PB.
(3) Press INDEX on your camcorder to display the index.
(4) Press MARK. The screen to protect the image appears.
(5) Press the image you want to protect. The "" appears above the protected image.

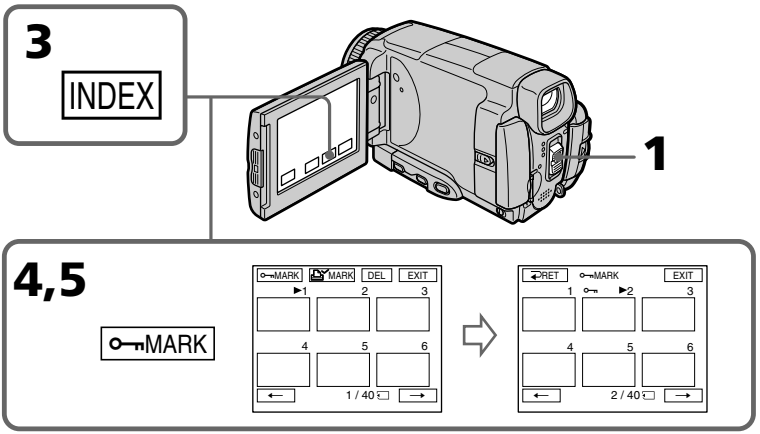

To return to FN
Press EXIT.

To cancel image protection
Press the image you want to cancel image protection in step 5 again. The "" disappears.

Note
Formatting erases all information on the "Memory Stick," including the protected image data. Check the contents of the "Memory Stick" before formatting.

If the write-protect tab on the "Memory Stick" is set to LOCK
You cannot carry out image protection.

Deleting images – DELETE

You can delete images stored in a "Memory Stick." You can delete all images or selected images.

Deleting selected images

Before operation
Insert a "Memory Stick" into your camcorder.

(1) Set the POWER switch to MEMORY/NETWORK (DCR-IP55 only) or VCR.
(2) Press PLAY or PB, then press –/+ to select the image you want to delete.
(3) Press FN to display PAGE1.
(4) Press DELETE. DELETE? appears on the LCD screen.
(5) Press OK. The selected image is deleted.

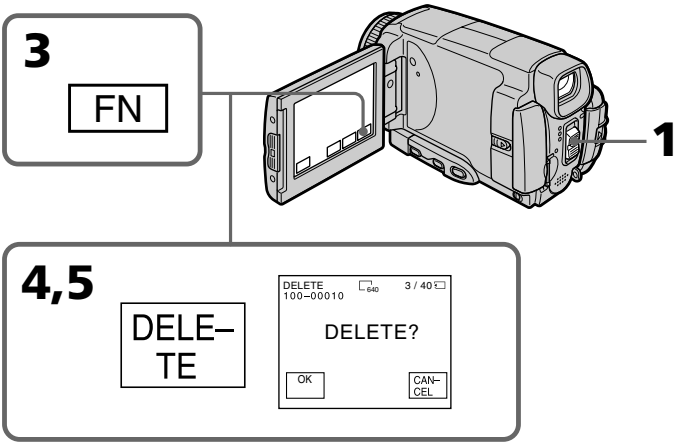

To return to FN
Press EXIT.

To cancel deleting an image
Press CANCEL in step 5.

Notes
- To delete a protected image, first cancel image protection.
- Once you delete an image, you cannot restore it. Check the images to delete carefully before deleting them.

If the write-protect tab on the "Memory Stick" is set to LOCK
You cannot delete images.

Deleting selected images on the index screen

Before operation
Insert a "Memory Stick" into your camcorder.

(1) Set the POWER switch to MEMORY/NETWORK (DCR-IP55 only) or VCR.
(2) In MEMORY/NETWORK mode, go to step 3.
In VCR mode, press PB.
(3) Press INDEX to display the index.
(4) Press DEL, then press the image you want to delete. The number of the selected image is highlighted.
(5) If there is other image you want to delete, press the image.
(6) After selecting the image to be deleted, press EXEC. DELETE? appears on the LCD screen.
(7) Press OK. The selected images are deleted.

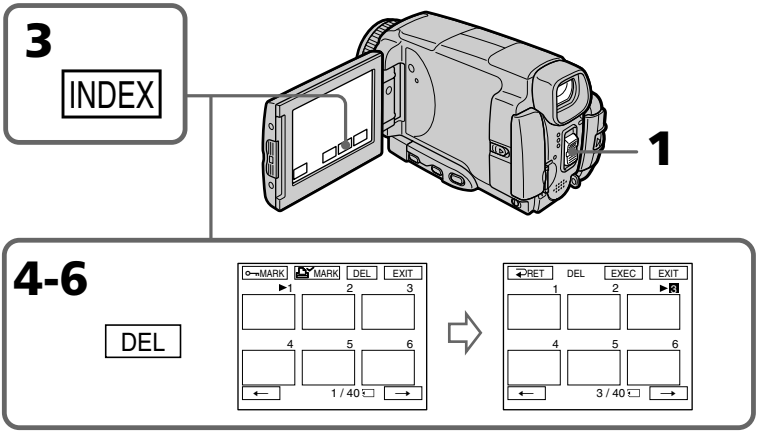

To return to FN
Press EXIT.

To cancel deleting an image
Press CANCEL in step 6.

Deleting all the images

You can delete all the unprotected images in a "Memory Stick."

Before operation
Insert a "Memory Stick" into your camcorder.

(1) Set the POWER switch to MEMORY/NETWORK (DCR-IP55 only).
(2) Press FN to display PAGE1.
(3) Press MENU, then select DELETE ALL in ▭ in the menu settings (p. 179). And press EXEC.
(4) Press ↑/↓ to select OK, then press EXEC.
OK changes to EXECUTE.
(5) Press EXEC.
DELETING appears on the LCD screen. When all the unprotected images are deleted, COMPLETE is displayed.

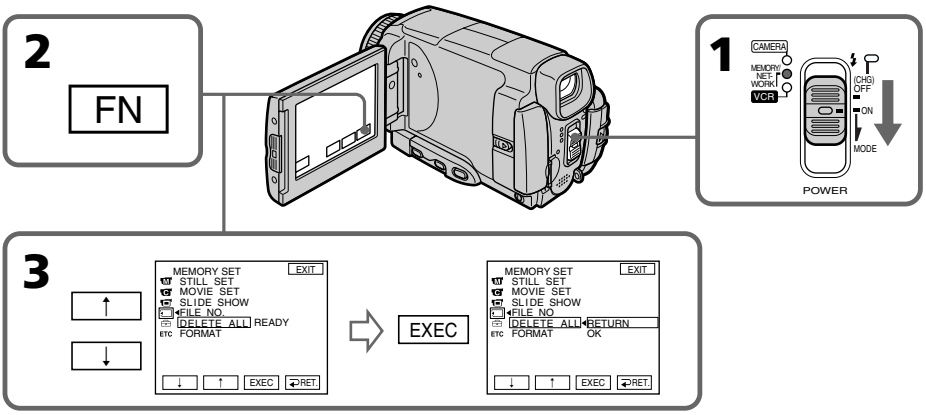

To return to FN
Press EXIT.

To cancel deleting all the images in the "Memory Stick"
Press ↑/↓ to select RETURN in step 5, then press EXEC.

While DELETING appears
Do not turn the POWER switch or press any buttons.

Writing a print mark – PRINT MARK

You can specify the recorded still image to print out by putting marks. This function is useful for printing out still images later.
Your camcorder conforms with the DPOF (Digital Print Order Format) standard for specifying the still images to print out.

Before operation
Insert a "Memory Stick" into your camcorder.

(1) Set the POWER switch to MEMORY/NETWORK (DCR-IP55 only) or VCR.
(2) In MEMORY/NETWORK mode, go to step 3.
In VCR mode, press PB.
(3) Press INDEX to display the index.
(4) Press MARK. The screen to write a print mark appears.
(5) Press the image you want to write a print mark. The appears on the selected image.

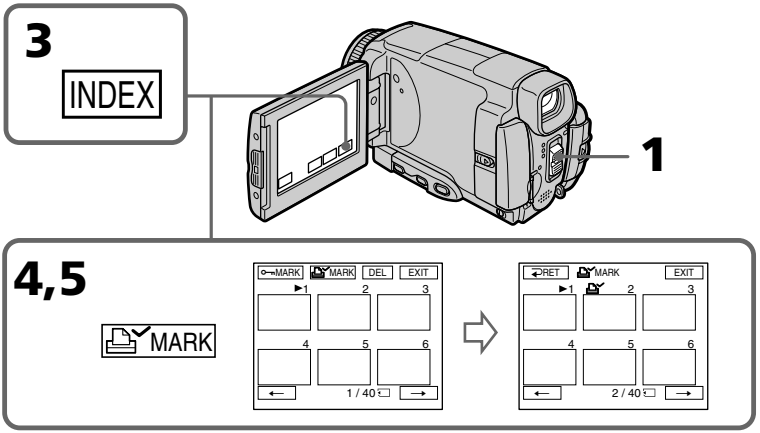

To return to FN
Press EXIT.

To cancel writing print marks
Press the image you want to cancel the print mark in step 5 again . The disappears.

If the write-protect tab on the "Memory Stick" is set to LOCK
You cannot write print marks on still images.

Moving pictures
You cannot write print marks on moving pictures.

While the file name is flashing
You cannot write print mark on the stil image.

Viewing images on your computer – Introduction

There are the following ways of connecting the camcorder to a computer in order to view images saved on a "Memory Stick" or recorded on a tape on your computer.

To view images on a computer which has a "Memory Stick" slot, first remove the "Memory Stick" from the camcorder and then insert it into the computer's "Memory Stick" slot.

	Camcorder Connection jack	Connection cable	Computer environment requirements	Reference pages	
				For Windows users	For Macintosh users
Tape images	USB jack	USB cable (supplied)	USB connector, editing software	153-159 161-165	———
	MICROMV Interface	i.LINK cable (DV connecting cable) (optional)	i.LINK (IEEE 1394) connector editing software	152	
"Memory Stick" images	USB jack*	USB cable (supplied)	USB connector, editing software	153-155 157-160 166-168	169-171

When connecting to a computer via the USB jack, complete installation of the USB driver before connecting the camcorder to the computer. If you connect the camcorder to the computer first, you will not be able to install the USB driver correctly.

For details about your computer's connectors and editing software, contact the computer manufacturer.

*When connecting to a computer without a USB jack

Use an optional floppy disk adaptor for the "Memory Stick" or a PC card adaptor for a "Memory Stick".
When purchasing an accessory, check its catalog beforehand for the recommended operating environment.

Notes on using your computer

"Memory Stick"

- "Memory Stick" operations on your camcorder cannot be assured if a "Memory Stick" formatted on your computer is used on your camcorder, or if the "Memory Stick" in your camcorder was formatted from your computer when the USB cable was connected.
- Do not compress the data on the "Memory Stick." Compressed files cannot be played back on your camcorder.

Software

- Depending on your application software, the file size may increase when you open a still image file.
- When you load an image modified using retouching software from your computer to your camcorder or when you directly modify the image on your camcorder, the image format will differ so a file error indicator may appear and you may be unable to open the file.

Communications with your computer

Communications between your camcorder and your computer may not recover after recovering from Suspend, Resume, or Sleep.

Connecting your camcorder to your computer using the i.LINK cable

You can view or edit the images recorded on a tape using your computer. You can record images edited with the computer on the tape.
To view images on your computer, the application software MovieShaker Ver.3.1 for MICROMV (supplied) and i.LINK cable is required.

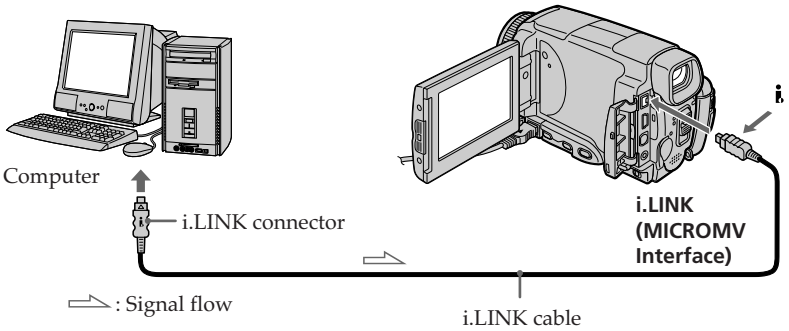

Note
To view images on your computer, you have to install the i.LINK driver and the application software into your computer. They are included in the supplied application software MovieShaker Ver.3.1 for MICROMV.
Before installing the i.LINK driver and the application software into your computer, be sure not to connect the camcorder to the computer. For details on installing and on an i.LINK connection, refer to the operating instructions supplied with MovieShaker Ver.3.1 for MICROMV.

Recommended computer environment

Recommended Windows environment

OS:	Microsoft Windows Me, Windows 2000 Professional, Windows XP Home Edition/Professional. Standard installation is required. Operation is not assured if the above environment is an upgraded OS.
CPU:	Pentium III 600 MHz or faster (Required) Pentium III 800 MHz or faster (Recommended)
Main memory:	128 MB or larger (Required) 256 MB or larger (Recommended)
Display:	800 × 600 or larger screen size/1024 × 480 or larger screen size, 16-bit color or higher
Hard disk:	100 MB hard disk space (for installation), ATA66 or higher speed (required for capturing an image)

The i.LINK (IEEE1394) connector must be provided as standard.

Note
Operations are not guaranteed for all the recommended computer environments mentioned above.

Connecting your camcorder to your computer using the USB cable – For Windows users

Complete installation of the USB driver before connecting the camcorder to the computer. If you connect the camcorder to the computer first, you will not be able to install the USB driver correctly.

When connecting to a computer via the USB jack

You must **install a USB driver** onto your computer in order to connect the camcorder to the computer's USB connector. The USB driver can be found on the CD-ROM supplied, along with the application software required for viewing images.
If you connect your camcorder and your computer using the USB cable, you can view pictures live from your camcorder and pictures recorded on a tape on your computer (USB streaming function).
Furthermore, if you download pictures from your camcorder to your computer, you can process or edit them in image processing software and append them to e-mail.
You can view images recorded on a "Memory Stick" on your computer.

Recommended computer usage environment when connecting via USB cable and viewing tape images on the computer

OS:
Microsoft Windows 98SE, Windows Me, Windows 2000 Professional, Windows XP Home Edition or Windows XP Professional Standard installation is required.
However, operation is not assured if the above environment is an upgraded OS.
You cannot hear sound if your computer is running Windows 98, but you can read still images.
CPU:
Pentium III 500 MHz or faster (800 MHz or faster recommended)
Application:
DirectX 8.0a or later
Sound system:
16 bit stereo sound card and stereo speakers
Memory:
64 MB or more
Hard disk:
Available memory required for installation:
at least 200MB
Available hard disc memory recommended:
at least 1GB (depending on the size of the image files edited)
Display:
4 MB VRAM video card, Minimum 800 × 600 dot Hi color (16 bit color, 65000 colors), Direct Draw display driver capability (At 800 × 600 dot or less, 256 colors and less, this product will not operate correctly.)
Others:
This product is based on DirectX technology, so it is necessary to install DirectX.

The USB connector must be provided as standard.

You cannot use this function in the Macintosh environment.

Recommended computer usage environment when connecting via USB cable and viewing the "Memory Stick" images on the computer

Recommended Windows environment
OS:
Microsoft Windows 98, Windows 98SE, Windows Me, Windows 2000 Professional, Windows XP Home Edition or Windows XP Professional standard installation is required.
However, operation is not assured if the above environment is an upgraded OS.
CPU:
MMX Pentium 200 MHz or faster

The USB connector must be provided as standard.

Windows Media Player must be installed (to play back moving pictures).

Notes
- Operations are not guaranteed for the Windows environment if you connect two or more USB equipment to a single computer at the same time, or when using a hub.
- Some equipment may not operate depending on the type of USB equipment that is used simultaneously.
- Operations are not guaranteed for all the recommended computer environments mentioned above.
- Windows and Windows Media are trademarks or registered trademarks of Microsoft Corporation in the United States and/or other countries.
- Pentium is trademark or registered trademark of Intel Corporation.
- All other product names mentioned herein may be the trademarks or registered trademarks of their respective companies. Furthermore, "TM" and "®" are not mentioned in each case in this manual.

Installing the USB driver

Start the following operation without connecting the USB cable to your computer.
Connect the USB cable according to "Making the computer recognize the camcorder".

If you are using Windows 2000 Professional, log in with permission of administrators.
If you are using Windows XP, log in with permission of computer managers.

(1) Turn on your computer and allow Windows to load.
(2) Insert the supplied CD-ROM in the CD-ROM drive of your computer. The application software starts up and the title screen appears.
(3) Move the cursor to USB Driver and click. This starts USB driver installation.

(4) Follow the on-screen messages to install the USB driver.
(5) Remove the CD-ROM and then restart the computer, in accordance with the instructions on the screen.

Note
If you connect the USB cable before USB driver installation is complete, the USB driver will not be properly registered. Carry out installation again in accordance with the steps on page 158.

Making the computer recognize the camcorder

Viewing images recorded on a tape on your computer

Refer to page 166, 169 for details on viewing the "Memory Stick" images on your computer.

You need to install PIXELA ImageMixer to view images recorded on a tape on your computer. Install it from the CD-ROM supplied with your camcorder.

To install and use this software in Windows 2000 Professional, you must be authorized as Power Users or Administrators. For Windows XP, you must be authorized as Administrators.

(1) Turn on your computer and allow Windows to load.
If you are using your computer, close all running applications.
(2) Insert the supplied CD-ROM into the CD-ROM drive of your computer.
The application software starts up and the title screen appears. If the title screen does not appear, double-click "My Computer" and then "ImageMixer" (CD-ROM Drive). The application software screen appears after a while.
(3) Move the cursor to "PIXELA ImageMixer" and click.
The Install Wizard program starts up and the "Select Settings Language" screen appears.
(4) Select the language for installation.
(5) Follow the on-screen messages.
The installation screen disappears when installation is complete.
(6) Click DirectX.
Follow the on-screen messages to install DirectX.
Restart your computer when the installation is completed.
(7) Connect the AC power adaptor to your camcorder. Set the POWER switch to VCR.
(8) Select USB STREAM to ON in in the menu settings (p. 181).
(9) With the CD-ROM inserted, connect the USB jacks of the camcorder and computer using the USB cable supplied with your camcorder.
Your computer recognizes the camcorder, and the Windows Add Hardware Wizard starts.

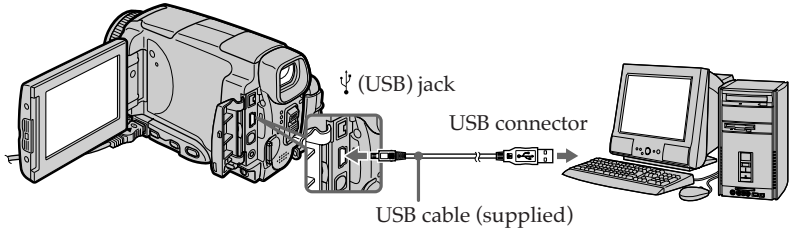

(10) Follow the on-screen messages so that the Add Hardware Wizard recognizes that the USB drivers have been installed. The Add Hardware Wizard starts three times because three different USB drivers are installed. Be sure to allow the installation to complete without interrupting it.

For Windows 2000 Professional, Windows XP Home Edition/Professional users

(11) After the "File Needed" screen appears.
Open "Browse..." → "My Computer" → "ImageMixer" → "Sonyhcb.sys", and click "OK".

Viewing images recorded on a "Memory Stick"

(1) Insert a "Memory Stick" into your camcorder.
(2) Connect the AC power adaptor and set the POWER switch to MEMORY/NETWORK (DCR-IP55 only).
(3) Connect the ψ (USB) jack on your camcorder to the USB connector on your computer using the supplied USB cable.
USB MODE appears on the LCD screen of your camcorder. Your computer recognises the camcorder, and the Add Hardware Wizard starts.

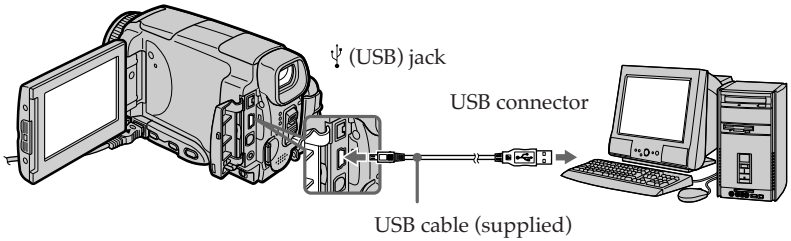

(4) Follow the on-screen messages so that the Add Hardware Wizard recognises that the USB drivers have been installed. The Add Hardware Wizard starts two times because two different USB drivers are installed. Be sure to allow the installation to complete without interrupting it.

You cannot install the USB driver if a "Memory Stick" is not in your camcorder.
Be sure to insert a "Memory Stick" into your camcorder before installing the USB driver.

If you cannot install the USB driver

The USB driver has been registered incorrectly as your computer was connected to your camcorder before installation of the USB driver was completed. Perform the following procedure to correctly install the USB driver.

Viewing images recorded on a tape

Step 1: Uninstall the incorrect USB driver

① Turn on your computer and allow Windows to load.
② Connect the AC power adaptor, and set the POWER switch to VCR.
③ Connect the USB connector on your computer to the ψ (USB) jack on your camcorder using the USB cable supplied with your camcorder.
④ Open your computer's "Device Manager".

Windows XP:
Select "Start" → "Control Panel" → "System" → "Hardware", and click the "Device Manager" button.
If there is no "System" inside "Pick a category" after clicking "Control Panel", click "Switch to classic view" instead.
Windows 2000 Professional:
Select "My Computer" → "Control Panel" → "System" → "Hardware" tab, and click the "Device Manager" button.
Windows 98SE/Windows Me:
Select "My Computer" → "Control Panel" → "System", and click "Device Manager".

⑤ Select and delete the underlined devices below.

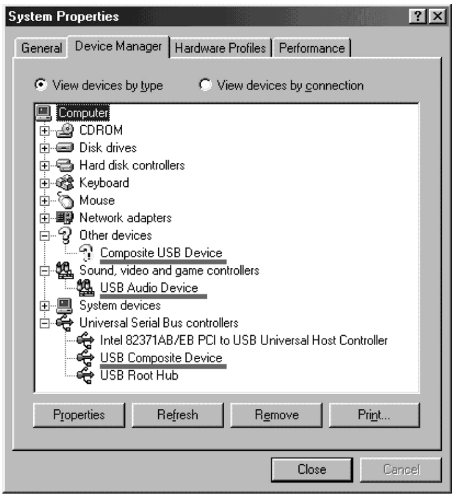

Windows 98SE

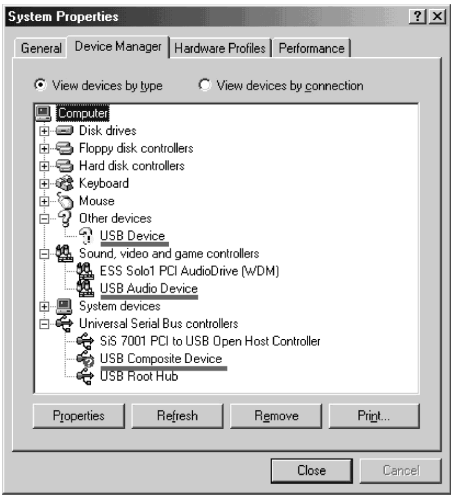

Windows Me

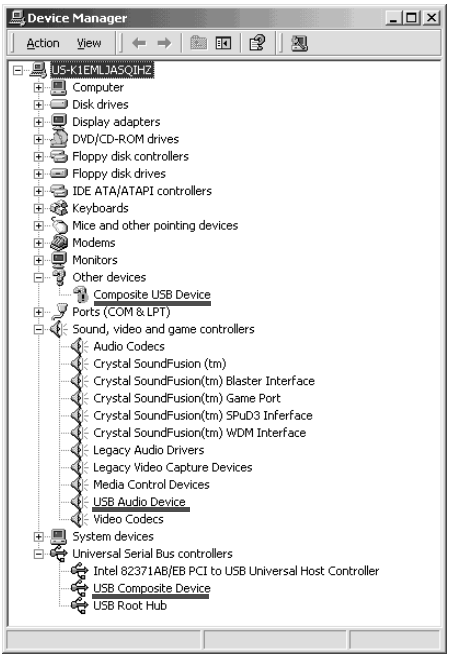

Windows 2000 Professional

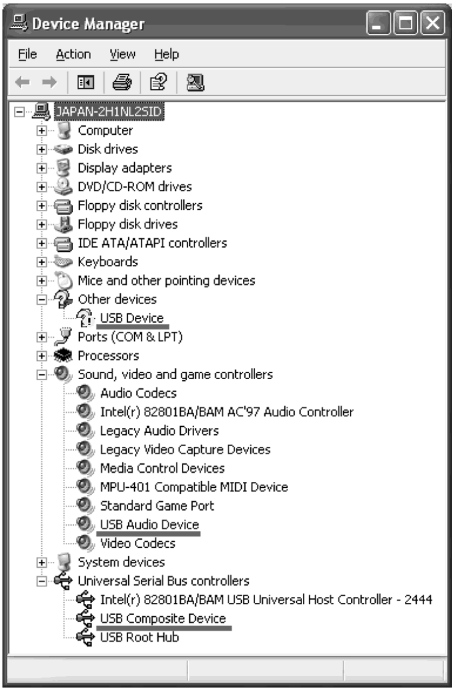

Windows XP

⑥ Turn the POWER switch to OFF (CHG) on your camcorder, and then disconnect the USB cable.
⑦ Restart your computer.

Step 2: Install the USB driver on the supplied CD-ROM
Perform the entire procedure described in “Installing the USB driver” on page 155.

Viewing images recorded on a "Memory Stick"

Step1: Uninstall the incorrect USB driver

① Turn on your computer and allow Windows to load.
② Insert a "Memory Stick" into your camcorder.
③ Connect the AC power adaptor, and set the POWER switch to MEMORY/NETWORK (DCR-IP55 only).
④ Connect the USB connector on your computer to the ψ (USB) jack on your camcorder using the USB cable supplied with your camcorder.
⑤ Open your computer's "Device Manager".

Windows 2000 Professional:
Select "My Computer" → "Control Panel" → "System" → "Hardware", and click the "Device Manager" button.
Other OS:
Select "My Computer" → "Control Panel" → "System", and click "Device Manager".

⑥ Select "Other devices".
Select the device prefixed with the "?" mark and delete.
Ex: (?)Sony Handycam
⑦ Turn the POWER switch to OFF (CHG) on your camcorder, and then disconnect the USB cable.
⑧ Restart your computer.

Step2: Install the USB driver on the supplied CD-ROM

Perform the entire procedure described in "Installing the USB driver" on page 155.

Viewing images recorded on a tape on your computer – For Windows users

Capturing images with "PIXELA ImageMixer Ver.1.0 for Sony"

You need to install the USB driver and PIXELA ImageMixer to view images recorded on a tape on your computer (p. 155).

If you are using Windows 2000 Professional, you must be authorised as Power Users or log in with permission of administrators. If you are using Windows XP, log in with permission of managers.

Viewing images recorded on a tape

(1) Turn on your computer and allow Windows to load.
(2) Connect the AC power adaptor, and insert a cassette into your camcorder.
(3) Set the POWER switch to VCR.
Select USB STREAM in ⊟ to ON in the menu settings (p. 181).
(4) Select "Start" → "Programs" → "PIXELA" → "ImageMixer" → "PIXELA ImageMixer Ver.1.0 for Sony".
The "PIXELA ImageMixer Ver.1.0 for Sony" startup screen appears on your computer.
The title screen appears.
(5) Click on the screen.

(6) Select (USB).

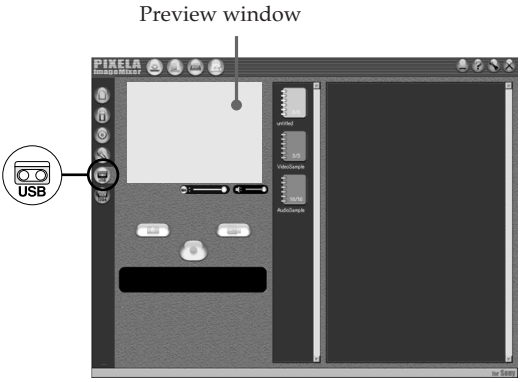

(7) Connect the ψ (USB) jack on your camcorder with the USB connector on your computer using the supplied USB cable.

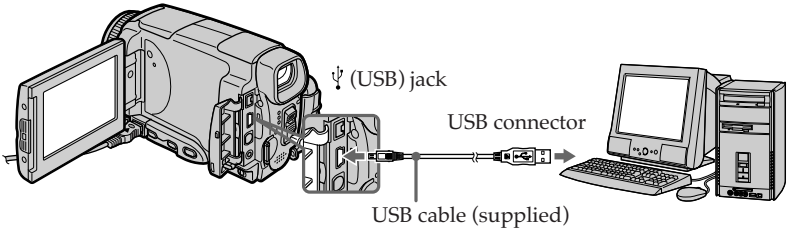

(8) Press ►II on the LCD screen to start playback.
The picture from the tape appears on preview window on your computer.

Viewing pictures live from your camcorder

(1) Follow the steps 1, 2 on page 161.
(2) Set the POWER switch to CAMERA.
Select USB STREAM in to ON in the menu settings (p. 181).
(3) Follow the steps 4 to 7 on pages 161 and 162.
The picture from your camcorder appears on preview window on your computer.

Capturing still images

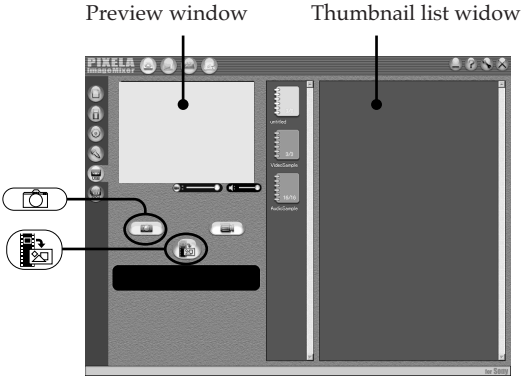

(1) Select .
(2) Looking at the preview window, move the cursor to and press it at the point you want to capture.
The still image on the screen is captured.
Captured images are displayed in the thumbnail list window.

Capturing moving pictures

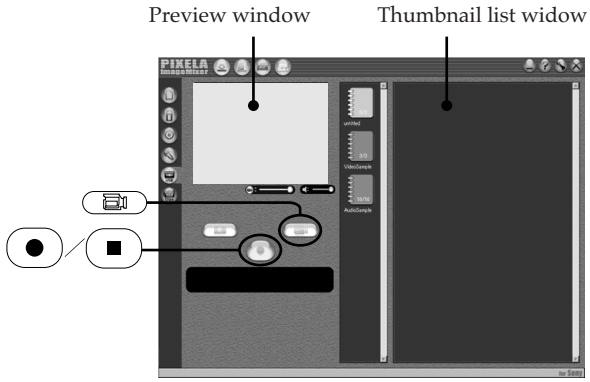

(1) Select .

(2) Look at the preview window and click on ● at the first scene of the movie you want to capture. ● changes to ■ .

(3) Look at the preview window and click on ■ at the last scene you want to capture. The moving picture is captured. The captured images appear in the thumbnail list window.

Notes

- PIXELA Image Mixer is only for the DV equipment though it has the function that adopts the i.LINK cable. To view images recorded on a MICROMV tape, use the application software MovieShaker Ver.3.1 for MICROMV.
- The following may occur while using your camcorder, and are not due to any malfunction.
  – The image shakes up and down.
  – Some images are not displayed correctly due to noise, etc.
  – Images of different colour systems to that of the camcorder are not displayed correctly.
- When your camcorder is in the standby with a cassette inserted, it turns off automatically after five minutes.
- We recommend setting DEMO MODE to OFF in the menu settings when your camcorder is in the standby, and no cassette is inserted.
- Indicators in the camcorder LCD screen do not appear on images that are captured into your computer.

If image data cannot be transferred by the USB connection

The USB driver has been registered incorrectly as your computer was connected to your camcorder before installation of the USB driver was completed. Reinstall the USB driver following the procedure on page 158.

If any trouble occurs

Close all running applications, then restart your computer.

Carry out the following operations after quitting the application:
– Disconnect the USB cable.
– Change the POWER switch to the other position or set the POWER switch to OFF (CHG) on your camcorder.

When operating the following modes, they do not function for the image to be output, or the image cannot be output
– Colour Slow Shutter
– Super NightShot
– Digital effect
– MEMORY MIX

Seeing the on-line help (operating instructions) of "PIXELA ImageMixer Ver.1.0 for Sony"

A "PIXELA ImageMixer Ver.1.0 for Sony" on-line help site is available where you can find the detailed operating method of "PIXELA ImageMixer Ver.1.0 for Sony".

(1) Click ? located in the upper-right corner of the screen.
The ImageMixer's Manual screen appears.
(2) You can find the information you need from the list of contents.

To close on-line help
Click ⊗ at the top right of the screen.

If you have any questions about "PIXELA ImageMixer Ver.1.0 for Sony"
"ImageMixer Ver.1.0 for Sony" is a trademark of PIXELA corporation. For more information, refer to the instruction manual of the CD-ROM supplied with your camcorder.

Note on using your computer

Communications with your computer

Communications between your camcorder and your computer may not recover after recovering from Suspend, Resume, or Sleep.

Viewing images recorded on a "Memory Stick" on your computer – For Windows users

Viewing images

Before operation

- You need to install the USB driver to view "Memory Stick" images on your computer (p. 155).
- An application such as Windows Media Player must be installed to play back moving pictures in Windows environment.

(1) Turn on your computer and allow Windows to load.

(2) Insert a "Memory Stick" into your camcorder, and connect the AC power adaptor to your camcorder. Set the POWER switch to MEMORY/NETWORK (DCR-IP55 only).

(3) When the CD-ROM is inserted on your computer, connect the ψ (USB) jack on your camcorder to the USB connector on your computer using the supplied USB cable. USB MODE appears on the LCD screen of your camcorder.

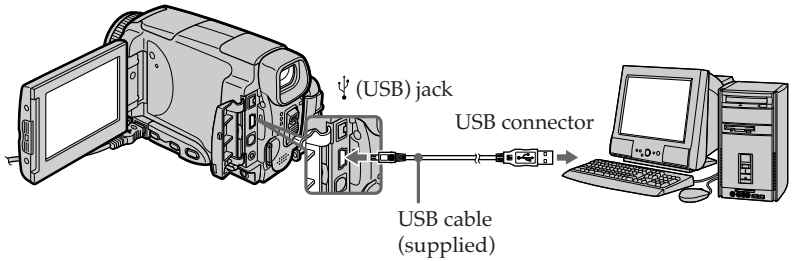

(4) Open "My Computer" on Windows and double-click the newly recognized drive (Example: "Removable Disk (E:)").
The folders inside the "Memory Stick" are displayed.

(5) Select and double-click the desired image file from the folder.
For the detailed folder and file name, see "Image file storage destinations and image files."

Desired file type	Double-click in this order
Still image/ Moving picture*	"Dcim" folder → "100msdcf" folder → Image file

* Copying a file to the hard disk of your computer before viewing it is recommended. If you play back the file directly from the "Memory Stick," the image and sound may break off.

Image file storage destinations and image files

Image files recorded with your camcorder are grouped in folders by recording mode. The meanings of the file names are as follows. □□□□ stands for any number within the range from 0001 to 9999.

For Windows Me users (The drive recognizing your camcorder is [E:].)

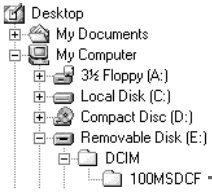

Folder containing still image and moving picture data

Folder	File	Meaning
100MSDCF	DSC0□□□□.JPG	Still image file
	MOV1□□□□.MPG	Moving picture file

Disconnect the USB cable and remove the “Memory Stick” or setthe POWER switch to OFF(CHG)

– For Windows 2000 Professional/Windows Me, Windows XP Home Edition/ Professional users

To unplug the USB cable, eject the “Memory Stick” or set the POWER switch to OFF(CHG), follow the procedure below.

(1) Move the cursor to the “Unplug or Eject Hardware” icon on the Task Tray and click to cancel the applicable drive.

(2) After the “Safe to remove” message appears, disconnect the USB cable and remove the “Memory Stick” or set the POWER switch to OFF(CHG).

Connecting your camcorder to your computer using the USB cable – For Macintosh users

When connecting to a computer via the USB jack

You must **install a USB driver** onto your computer in order to connect the camcorder to the computer's USB connector. The USB driver can be found on the CD-ROM supplied, along with the application software required for viewing images.

Recommended Macintosh environment

Mac OS 8.5.1/8.6/9.0/9.1/9.2 or Mac OS X (v10.0/v10.1) standard installation is required.
However, note that the update to Mac OS 9.0/9.1/9.2 should be used for the following models.

- iMac with the Mac OS 8.6 standard installation and a slot loading type CD-ROM drive
- iBook or Power Mac G4 with the Mac OS 8.6 standard installation

The USB connector must be provided as standard.

QuickTime 3.0 or newer must be installed (to play back moving pictures).

Notes

- Operations are not guaranteed for the Macintosh environment if you connect two or more USB equipment to a single computer at the same time, or when using a hub.
- Some equipment may not operate depending on the type of USB equipment that is used simultaneously.
- Operations are not guaranteed for all the recommended computer environments mentioned above.
- Macintosh and Mac OS, QuickTime are trademarks of Apple Computer Inc.
- All other product names mentioned herein may be the trademarks or registered trademarks of their respective companies. Furthermore, “TM” and “®” are not mentioned in each case in this manual.

Installing the USB driver

Do not connect the USB cable to your computer before installation of the USB driver is completed.

For Mac OS 8.5.1/8.6/9.0 users

(1) Turn on your computer and allow the Mac OS to load.
(2) Insert the supplied CD-ROM in the CD-ROM drive of your computer.
The application software screen appears.

(3) Click the "USB Driver" to open the folder containing the six files related to "Driver."

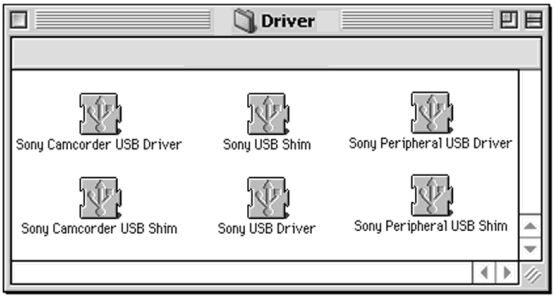

(4) Select the following two files, and drag and drop them into the System Folder.
- Sony Camcorder USB Driver
- Sony Camcorder USB Shim

(5) When the message appears, click "OK."
The USB driver is installed on your computer.
(6) Remove the CD-ROM from the computer.
(7) Restart your computer.

For Mac OS 9.1/9.2/Mac OS X (v10.0/v10.1)
The USB driver need not be installed. Your Mac is automatically recognized as a drive just by connecting your Mac using the USB cable.

Viewing images recorded on a "Memory Stick" on your computer – For Macintosh users

Viewing images

Before operation
You need to install the USB driver to view the "Memory Stick" images on your computer. (p. 170)
QuickTime 3.0 or newer must be installed to play back moving pictures.

(1) Turn on your computer and allow Mac OS to load.
(2) Insert a "Memory Stick" into your camcorder, and connect the AC power adaptor to your camcorder.
(3) Set the POWER switch to MEMORY/NETWORK (DCR-IP55 only).
(4) Connect the ψ (USB) jack on your camcorder with the USB connector on your computer using the supplied USB cable.
(5) Double-click the "Memory Stick" icon on the desktop.
The folders inside the "Memory Stick" are displayed.
(6) Select and double-click the desired image file from the folder.

Desired file type	Double-click in this order
Still image/Moving picture*	"Dcim" folder → "100msdcf" folder → Image file

* Copying a file to the hard disk of your computer before viewing it is recommended. If you play back the file directly from the "Memory Stick," the image and sound may break off.

Disconnect the USB cable and remove the "Memory Stick" or set the POWER switch to OFF (CHG)

Follow the procedure below.

(1) Close all running applications.
Make sure that the access lamp of the hard disk is not lit.
(2) Drag the "Memory Stick" icon into the "Trash". Alternatively, select the "Memory Stick" icon by clicking on it, and then select "Eject disk" from the "Special" menu at the top left of the screen.
(3) Disconnect the USB cable and remove the "Memory Stick" or set the POWER switch to OFF (CHG).

For Mac OS X (v10.0) users
Shut down your computer, then disconnect the USB cable and remove the "Memory Stick" or set the POWER switch to OFF (CHG).

Accessing the network

– DCR-IP55 only

You can access the Internet using a Bluetooth equipped device that is complied to the camcorder. Once the access is made, you can view a Web page, send/receive your e-mail, etc. This section describes only how to open the Network Menu.

(1) Set the POWER switch to MEMORY/NETWORK.
(2) Press [NETWORK].
(Bluetooth) lamp lights up and Network Menu appears.

For the details, refer to the Network Function Operating Instructions supplied with your camcorder.

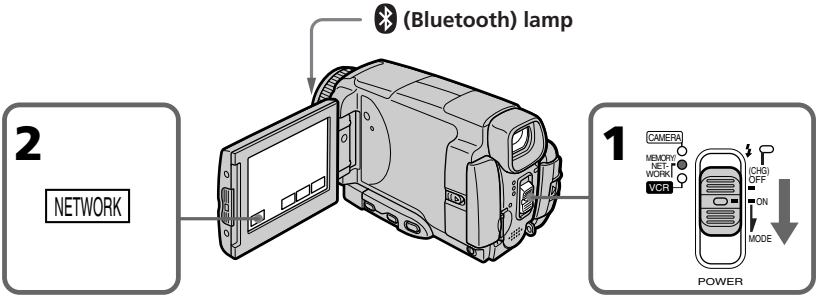

On trademarks

- The Bluetooth trademarks are owned by their proprietor and used by Sony Corporation under license.
- All other product names mentioned herein may be the trademarks or registered trademarks of their respective companies. Furthermore, "TM" and "®" are not mentioned in each case in this manual.

Note

Make sure that your camcorder is in the standby with the POWER switch set to MEMORY/NETWORK.

How to hold your camcorder when operating in NETWORK mode

Hold your camcorder with your hand through the wrist strap to keep from dropping it. The operation buttons needed in NETWORK mode are displayed on the LCD screen. Press the buttons with the stylus supplied.

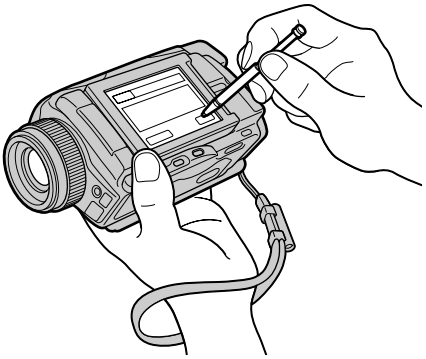

After using the stylus

Put it back in the holder on the wrist strap. Hold the stylus correctly as shown in the illustration and insert it until it clicks.

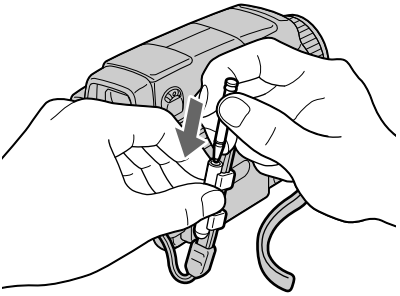

Changing the menu settings

To change the mode settings in the menu settings, press ↓/↑ to select the menu items. The default settings can be partially changed. First, select the icon, then the menu item and the mode.

(1) Set the POWER switch to CAMERA or MEMORY/NETWORK (DCR-IP55 only) or VCR.
(2) Press FN to display PAGE1.
(3) Press MENU to display the menu.
(4) Press ↓/↑ to select a desired icon, then press EXEC.
(5) Press ↓/↑ to select a desired item, then press EXEC.
(6) Press ↓/↑ to select a desired setting, then press EXEC.
(7) Repeat steps from 4 to 6 if you want to change other items. Press ↩ RET. to return to step 4.

For details, see "Selecting the mode setting of each item" (p. 175).

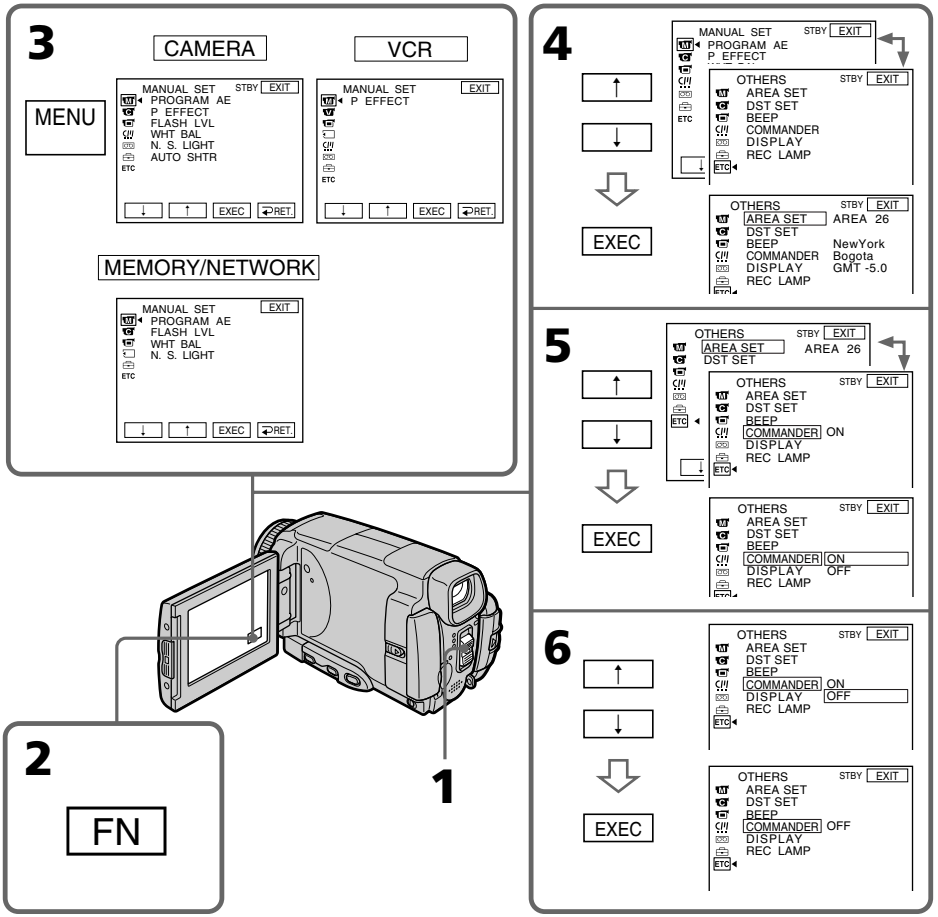

To return to FN
Press EXIT.

Menu items are displayed as the following icons:

- MANUAL SET
- CAMERA SET
- VCR SET
- LCD/VF SET
- MEMORY SET
- CM SET
- TAPE SET
- SETUP MENU
- OTHERS

Selecting the mode setting of each item

● is the default setting.

Menu items differ depending on the position of the POWER switch.
The LCD screen shows only the items you can operate at the moment.

Icon/item	Mode	Meaning	POWER switch
MANUAL SET			
PROGRAM AE	——	To suit your specific shooting requirement.	CAMERA MEMORY/ NETWORK*
P EFFECT	——	To add special effects like those in films or on the TV to images (p. 61, 75).	CAMERA VCR
FLASH LVL	HIGH	To make the flash level higher than normal.	CAMERA MEMORY/ NETWORK*
	● NORMAL	To use the normal setting.	
	LOW	To make the flash level lower than normal.	
WHT BAL	——	To adjust the white balance (p. 54).	CAMERA MEMORY/ NETWORK*
N.S. LIGHT	● ON	To use the NightShot Light function (p. 38).	CAMERA MEMORY/ NETWORK*
	OFF	To cancel the NightShot Light function.	
AUTO SHTR	● ON	To automatically activate the electronic shutter when shooting in bright conditions.	CAMERA
	OFF	To not automatically activate the electronic shutter even when shooting in bright conditions.	

* DCR-IP55 only.

FLASH LVL

You cannot adjust FLASH LVL if the external flash (optional) is not compatible with the flash level.