Self-timer recording

You can record still images on "Memory Stick"s with the self-timer. You can also use the Remote Commander for this operation.

Before operation

- Insert a "Memory Stick" into your camcorder (p. 119).
- Set PHOTO REC in to MEMORY in the menu settings.(The default setting is MEMORY.)

(1) In the standby, press FN and select PAGE2.
(2) Press SELFTIMER.
The (self-timer) indicator appears on the screen.
(3) Press PHOTO deeper.
The self-timer starts counting down from 10 with a beep. In the last two seconds of the countdown, the beep gets faster, then the recording starts automatically.

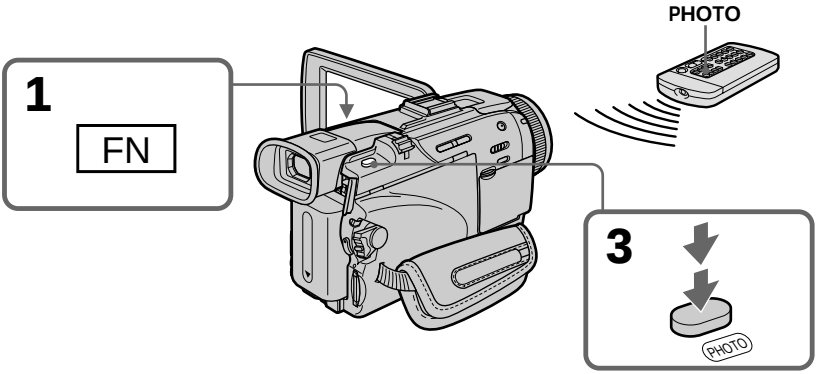

To cancel the self-timer

Press SELFTIMER so that the (self-timer) indicator disappears from the screen while your camcorder is in the standby. You cannot cancel self-timer using the Remote Commander.

Note

The self-timer recording is automatically canceled when:
– The self-timer recording is finished.
– The POWER switch is set to OFF (CHG) or VCR.

Self-timer recording

You can operate the self-timer recording only during the recording standby.

Recording still images on a tape – Tape Photo recording

You can record still images such as photographs on tapes.
You can record about 510 images in the SP mode and about 765 images in the LP mode on a 60-minute tape.

(1) In the standby, set PHOTO REC in to TAPE in the menu settings (p. 201).
(2) Keep pressing PHOTO lightly until a still image appears.
The CAPTURE indicator appears. Recording does not start yet.
To change the still image, release PHOTO, select a still image again, and then press and hold PHOTO lightly.
(3) Press PHOTO deeper.
The still image on the screen is recorded for about seven seconds. The sound during those seven seconds is also recorded.
The still image is displayed on the screen until recording is completed.

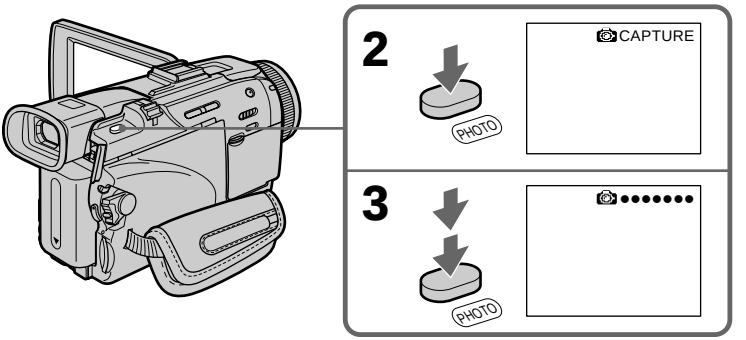

Recording images with the flash

For the details, see page 49.

Recording images with self-timer

(1) Set PHOTO REC in to TAPE in the menu settings (p. 201).
(2) Follow steps 1 and 3 on page 51.

Notes

- During tape photo recording, you cannot change the mode or setting.
- When recording a still image, do not shake your camcorder. The image may fluctuate.
- You cannot use PHOTO during the following operations (indicator flashes on the screen):
  – Fader
  – Digital effect

If you record a moving subject with the tape photo recording

When you play back the still image on other equipment, the image may fluctuate. This is not a malfunction.

To use the tape photo recording with the Remote Commander

Press PHOTO on the Remote Commander. Your camcorder records an image on the screen immediately.

To use the tape photo recording during the normal camera recording

You cannot check an image on the screen by pressing PHOTO lightly. Press PHOTO deeper. The still image is then recorded for about seven seconds, and your camcorder returns to the standby.

To record clear still images with little unsteadiness

We recommend that you record on “Memory Stick”s using the Memory Photo recording.

When playing back images recorded with the flash on other equipment

These images may flicker.

Adjusting the white balance manually

You can manually adjust and set the white balance. This adjustment makes white subjects look white and allows more natural color balance. Normally white balance is automatically adjusted.

(1) Set the POWER switch to CAMERA or MEMORY / NETWORK (DCR-TRV50 only). Press MENU, then select WHT BAL in with the SEL / PUSH EXEC dial (p. 200).

(2) Turn the SEL / PUSH EXEC dial to select the desired white balance, then press dial.

HOLD :
Recording a single-colored subject or background

OUTDOOR :
- When recording a sunset / sunrise, just after sunset, just before sunrise, neon signs, or fireworks
- Under a color-matching fluorescent lamp

INDOOR :
- Where lighting condition changes quickly
- Excessively bright places such as studios
- Under sodium lamps or mercury lamps

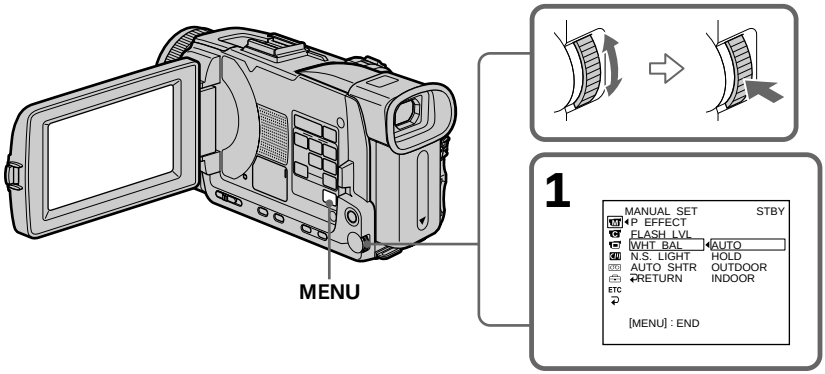

To return to the automatic white balance

Set WHT BAL to AUTO in the menu settings.

If the picture is being taken in a studio lit by TV lighting

We recommend that you record in the INDOOR.

When you record under fluorescent lighting

Use the automatic white balance or HOLD.
Your camcorder may not adjust the white balance correctly in the INDOOR.

In the automatic white balance

Point your camcorder at a white subject for about 10 seconds after setting the POWER switch to CAMERA to get a better adjustment when:
– You detach the battery for replacement.
– You take your camcorder outdoors from inside a house holding the exposure, or vice versa.

In the HOLD white balance

Set the white balance to AUTO and reset to HOLD after a few seconds when:
– You change the PROGRAM AE.
– You take your camcorder outdoors from inside a house, or vice versa.

Using the wide mode

You can record a 16:9 wide picture to watch on a 16:9 wide-screen TV (16:9WIDE).
If you connect a TV compatible with the ID-1/ID-2 system, the screen size is automatically selected.
Black bands appear on the screen during recording in 16:9WIDE mode **[a]**. The picture during playback on a normal TV **[b]** or on a wide-screen TV **[c]** is compressed in the longwise direction. If you set the screen mode of the wide-screen TV to the full mode, you can watch pictures of normal images **[d]**.

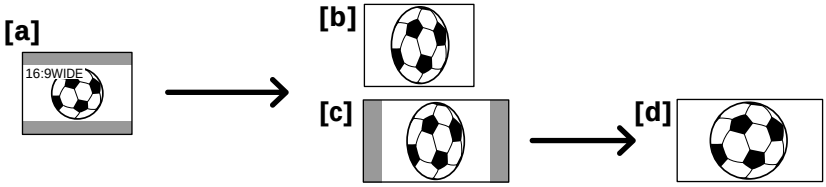

(1) In the standby, press MENU, then turn the SEL/PUSH EXEC dial to select 16:9WIDE in [C], then press the dial (p. 201).
(2) Turn the SEL/PUSH EXEC dial to select ON, then press the dial.

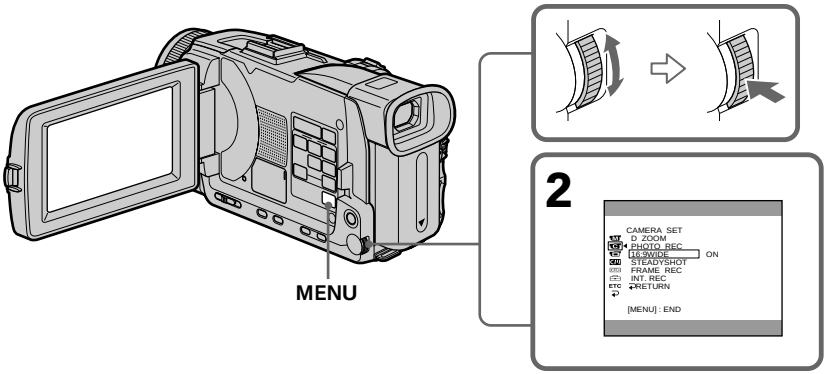

To cancel the wide mode

Set 16:9WIDE to OFF in the menu settings.

In the wide mode

You cannot select the following functions:
– Recording still images on a “Memory Stick” in the tape recording or tape recording standby
– OLD MOVIE
– BOUNCE

During recording

You cannot select or cancel the wide mode. When you cancel the wide mode, set your camcorder to the standby and then set 16:9WIDE to OFF in the menu settings.

Connection for a TV

Pictures recorded in the 16:9WIDE mode automatically appear on the TV screen at full size when:
– You connect your camcorder to a TV that is compatible with the video ID (ID-1 / ID-2) system.
– You connect your camcorder to the S video jack on the TV.

ID-1 system

The ID-1 system sends aspect ratio (screen horizontal / vertical ratio) information (16:9, 4:3, or letter box) with video signals.

ID-2 system

The ID-2 system sends a copyright protection signal with ID-1 signals inserted between video signals when you connect your camcorder to other equipment using an A / V connecting cable.

Using the fader

You can fade in or out to give your recording a more professional appearance.

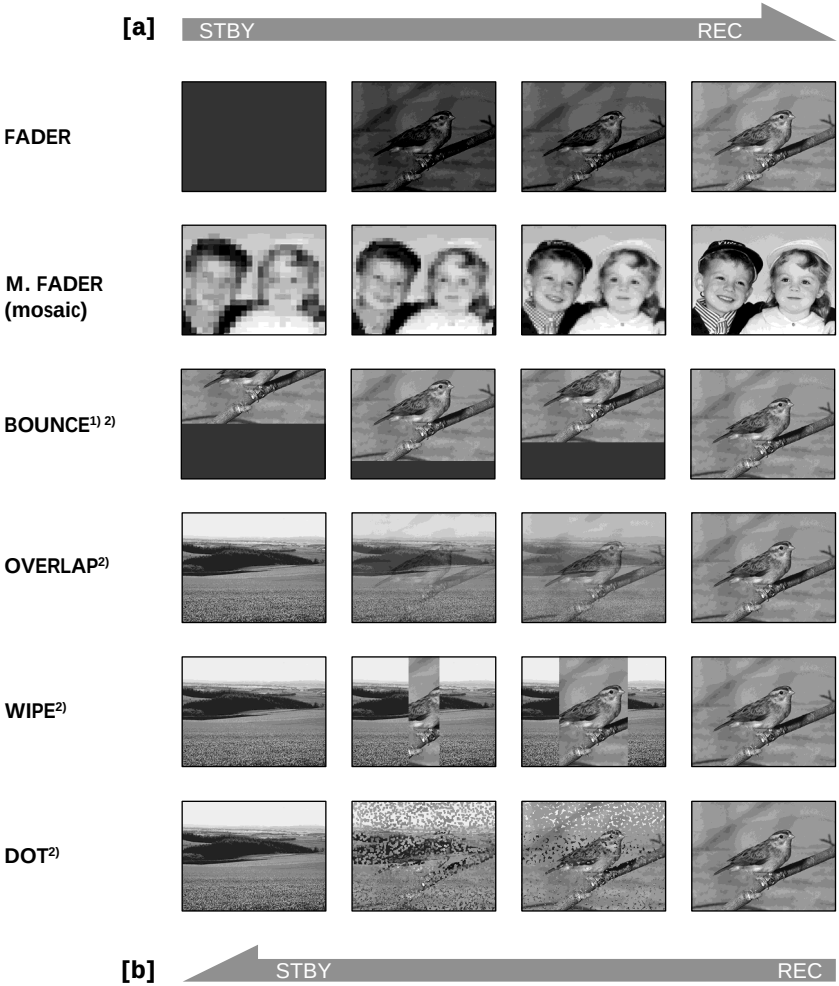

MONOTONE
When fading in, the picture gradually changes from black-and-white to color.
When fading out, the picture gradually changes from color to black-and-white.

1) You can use the bounce when D ZOOM is set to OFF in the menu settings.
2) Fade in only.

(1) When fading in [a]
In the standby, press FADER until the desired fader indicator flashes.
When fading out [b]
In the recording, press FADER until the desired fader indicator flashes.
The indicator changes as follows:

FADER → M. FADER → BOUNCE → MONOTONE → OVERLAP → WIPE → DOT → (no indicator) → FADER

The last selected fader is indicated first of all.

(2) Press START/STOP. The fader indicator stops flashing.
After fade in/out ends, your camcorder automatically returns to the normal mode.

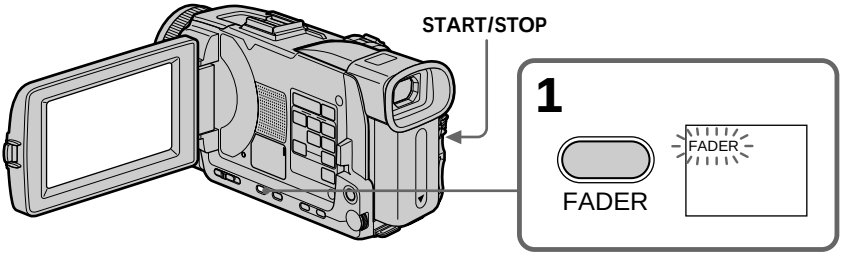

To cancel the fader

Before pressing START/STOP, press FADER until the indicator disappears.

Note

You cannot use the following functions while using the fader. Also, you cannot use the fader while using the following functions:
– Digital effect
– Super NightShot
– Color Slow Shutter
– Tape photo recording
– Recording still images on a "Memory Stick" in the tape recording or tape recording standby
– Recording with the flash
– Interval recording
– Frame recording

When you select OVERLAP, WIPE, or DOT

Your camcorder automatically stores the image recorded on a tape. While the image is being stored, the indicators flash fast, and the playback picture disappears. At this stage, the picture may not be recorded clearly, depending on the tape condition.

When you set the POWER switch to MEMORY/NETWORK (DCR-TRV50 only)
You cannot use the fader.

While using the bounce, you cannot use the following functions:
– Focus
– Zoom
– Picture effect
– Exposure
– Flexible Spot Meter

Note on the bounce
The BOUNCE indicator does not appear in the following mode or functions:
– When D ZOOM is activated in the menu settings
– Wide mode
– Picture effect
– PROGRAM AE

Using special effects – Picture effect

You can digitally process images to obtain special effects like those in films or on TV.

NEG. ART [a] : The color and brightness of the picture are reversed.
SEPIA : The picture appears in sepia.
B&W : The picture appears in monochrome (black-and-white).
SOLARIZE [b] : The light intensity becomes clearer, to make the picture look more like an illustration.
SLIM [c] : The picture expands vertically.
STRETCH [d] : The picture expands horizontally.
PASTEL [e] : The contrast of the picture is emphasized, to make the picture look more like an animated cartoon.
MOSAIC [f] : The picture appears mosaic-patterned.

[a] **[b]** **[c]** **[d]** **[e]** **[f]**

(1) Set the POWER switch to CAMERA. Press MENU, then select P EFFECT in with the SEL / PUSH EXEC dial, then press the dial (p. 200).
(2) Turn the SEL / PUSH EXEC dial to select the desired picture effect, then press the dial.

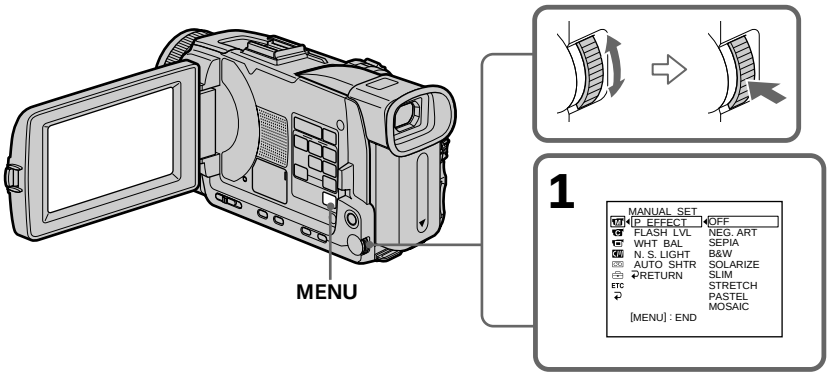

To cancel the picture effect

Set P EFFECT to OFF in the menu settings.

The following functions do not work during the picture effect

– Recording still images on a "Memory Stick" in the tape recording or tape recording standby
– OLD MOVIE of digital effect
– Bounce

When you set the POWER switch to OFF (CHG)

Picture effect is automatically canceled.

Using special effects – Digital effect

You can add special effects to recorded pictures using the various digital functions. Sound is recorded normally.

STILL
You can record a still image so that it is superimposed on a moving picture.

FLASH (FLASH MOTION)
You can record still images successively at constant intervals.

LUMI. (LUMINANCE KEY)
You can swap a brighter area in a still image with a moving picture.

TRAIL
You can record the picture so that an incidental image like a trail is left.

SLOW SHTR (SLOW SHUTTER)
You can slow down the shutter speed. The slow shutter is good for recording dark pictures more brightly.

OLD MOVIE
You can add an old movie type atmosphere to pictures. Your camcorder automatically sets the wide mode to ON and picture effect to SEPIA, and sets the appropriate shutter speed.

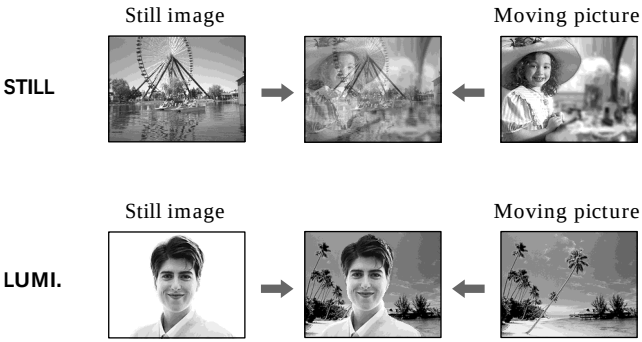

(1) Set the POWER switch to CAMERA, press FN to display PAGE1.
(2) Press DIG EFFT. The screen to select a desired digital effect appears.
(3) Press a desired digital effect. In the STILL and LUMI. modes, the still image is stored in memory.
(4) Press –/+ to adjust the effect.
–: To reduce the effect
+: To increase the effect

Items to be adjusted

STILL	The rate of the still image you want to superimpose on the moving picture
FLASH	The interval of frame by frame playback
LUMI.	The color scheme of the area in the still image which is to be swapped with a moving picture
TRAIL	The vanishing time of the incidental image
SLOW SHTR	Shutter speed. The larger the shutter speed number, the slower the shutter speed.
OLD MOVIE	No adjustment necessary

(5) Press ⮐ OK to return to PAGE1.

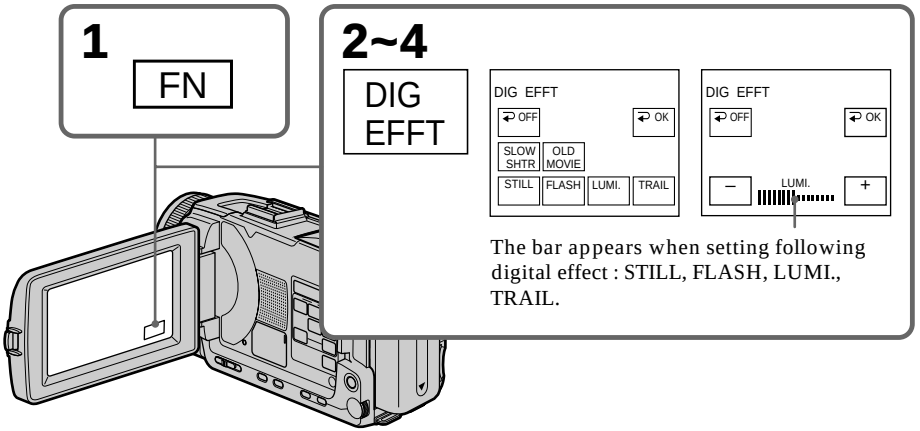

The bar appears when setting following digital effect : STILL, FLASH, LUMI., TRAIL.

To return to FN

Press EXIT.

To cancel the digital effect

Press ⮐ OFF to return to PAGE1.

Notes

- The following functions do not work during digital effect:
  - Fader
  - Super NightShot
  - Color Slow Shutter
  - Tape photo recording
  - Recording still images on a “Memory Stick” in the tape recording or tape recording standby
- The PROGRAM AE does not work in the slow shutter.
- The following functions do not work in the old movie:
  - Wide mode
  - Picture effect
  - PROGRAM AE

When you set the POWER switch to OFF (CHG)

Digital effect is automatically canceled.

When recording in the slow shutter

Auto focus may not be effective. Focus manually using a tripod.

Shutter speed

Shutter speed number	Shutter speed
SLOW SHTR 1	1/30
SLOW SHTR 2	1/15
SLOW SHTR 3	1/8
SLOW SHTR 4	1/4

Using the PROGRAM AE

You can select the PROGRAM AE (Auto Exposure) to suit your specific shooting requirements.

Spotlight
This mode prevents people's faces, for example, from appearing excessively white when shooting subjects lit by strong light in the theater.

Soft portrait
This mode brings out the subject while creating a soft background for subjects such as people or flowers.

Sports lesson
This mode minimizes camera-shake on fast-moving subjects such as in tennis or golf.

Beach & ski
This mode prevents people's faces from appearing dark in strong light or reflected light, such as at a beach in midsummer or on a ski slope.

Sunset & moon
This mode allows you to maintain atmosphere when you are recording sunsets, general night views, fireworks displays and neon signs.

Landscape
This mode is for when you are recording distant subjects such as mountains, and prevents your camcorder from focusing on glass or metal mesh in windows when you are recording a subject behind glass or a screen.

Using the PROGRAM AE

(1) Set the POWER switch to CAMERA or MEMORY / NETWORK (DCR-TRV50 only), press PROGRAM AE. The PROGRAM AE indicator appears.

(2) Turn the SEL / PUSH EXEC dial to select the desired PROGRAM AE. The indicator changes as follows:

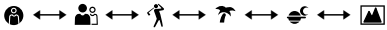

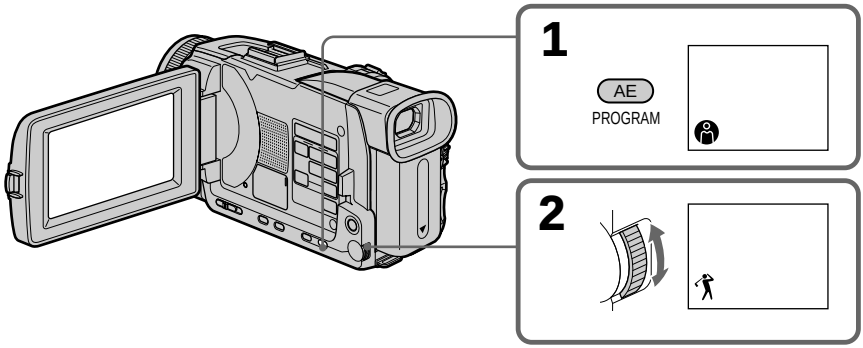

To cancel the PROGRAM AE

Press PROGRAM AE.

Notes

- Because your camcorder is set to focus only on subjects in the middle to far distance, you cannot take close-ups in the following modes:
  – Spotlight
  – Sports lesson
  – Beach & ski
- Your camcorder is set to focus only on distant subjects in the following modes:
  – Sunset & moon
  – Landscape
- The following functions do not work in the PROGRAM AE:
  – Color Slow Shutter
  – Slow Shutter
  – Old movie
  – Bounce
- When you set the POWER switch to MEMORY / NETWORK (DCR-TRV50 only), Sports lesson does not work. (The indicator flashes.)
- The PROGRAM AE does not work in the following cases. (The indicator flashes.)
  – To set NIGHTSHOT to ON
  – To record images on a “Memory Stick” using the MEMORY MIX.

While WHT BAL is set to AUTO in the menu settings

The white balance is adjusted even if the PROGRAM AE is selected.

You can adjust the following functions while using the PROGRAM AE

– Exposure
– Flexible Spot Meter

If you are recording under a discharge tube such as a fluorescent lamp, sodium lamp or mercury lamp

Flickering or changes in color may occur in the following modes. If this happens, turn the PROGRAM AE off.
– Soft portrait
– Sports lesson

Adjusting the exposure manually

You can manually adjust and set the exposure. Normally the exposure is automatically adjusted. Adjust the exposure manually in the following cases:
– When the subject is backlit
– When shooting subjects and dark backgrounds
– When recording dark pictures (e.g. night scenes) faithfully

(1) Set the POWER switch to CAMERA or MEMORY / NETWORK (DCR-TRV50 only), press EXPOSURE.
The exposure indicator appears.
(2) Turn the SEL / PUSH EXEC dial to adjust the brightness.

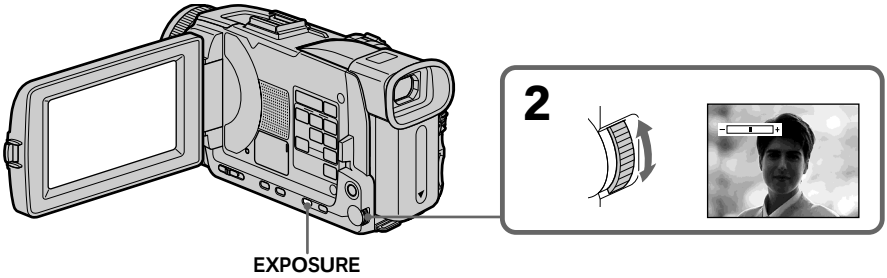

To return to the automatic exposure

Press EXPOSURE.

When you adjust the exposure manually, the following functions do not work:
– Color Slow Shutter
– Backlight

Your camcorder automatically returns to the automatic exposure:
– If you change the PROGRAM AE.
– If you slide NIGHTSHOT to ON.

Using the spot light-metering – Flexible Spot Meter

You can take a picture with the appropriate exposure automatically for just the point you want to focus on and with its exposure fixed. Use the Flexible Spot Meter in the following cases:
– The subject is backlit.
– When there is strong contrast between the subject and background such as with a subject that is on stage and lighted by a spotlight.

(1) When the POWER switch is set to CAMERA or MEMORY / NETWORK (DCR-TRV50 only), press FN to display PAGE1.
(2) Press SPOT METER. The SPOT METER screen appears.
(3) Press the desired area in the frame on the LCD screen.
The SPOT METER indicator flashes on the LCD screen. The exposure of the point you selected is adjusted.
(4) Press ⮐ OK to return to PAGE1.

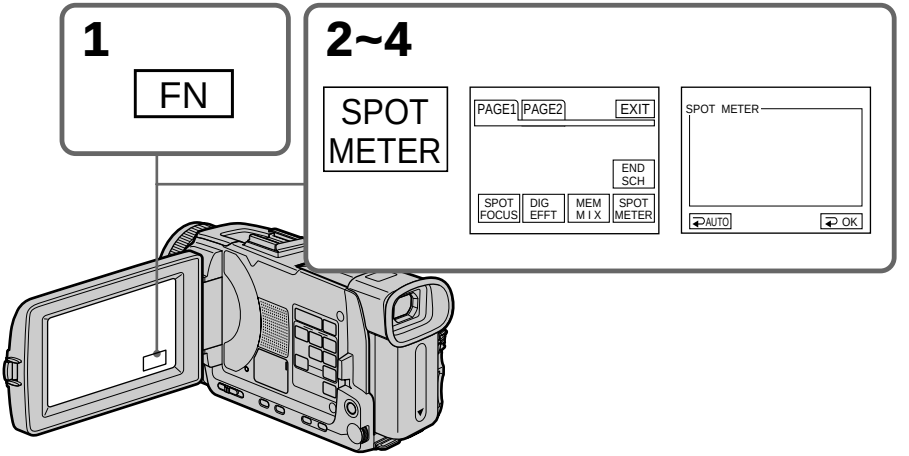

To return to FN

Press EXIT.

To return to the automatic exposure

Press ⮐ AUTO to return to PAGE1.

The following functions do not work during Flexible Spot Meter
– Color Slow Shutter
– Backlight
– Exposure

If you slide NIGHTSHOT to ON
Your camcorder automatically returns from the Flexible Spot Meter to automatic exposure.

Focusing manually

You can gain better results by manually adjusting the focus in the following cases. Normally, focus is automatically adjusted.

- The autofocus is not effective when shooting
  - Subjects through glass coated with water droplets
  - Horizontal stripes
  - Subjects with little contrast with backgrounds such as walls and sky
- When you want to change the focus from a subject in the foreground to a subject in the background.
- Shooting a stationary subject when using a tripod.

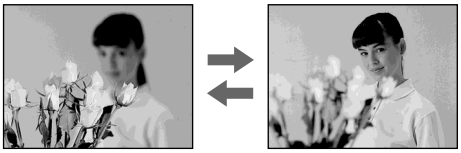

(1) Set FOCUS to MAN when the POWER switch is set to CAMERA or MEMORY / NETWORK (DCR-TRV50 only).
The ☞ indicator appears.

(2) Turn the focus ring to sharpen focus.

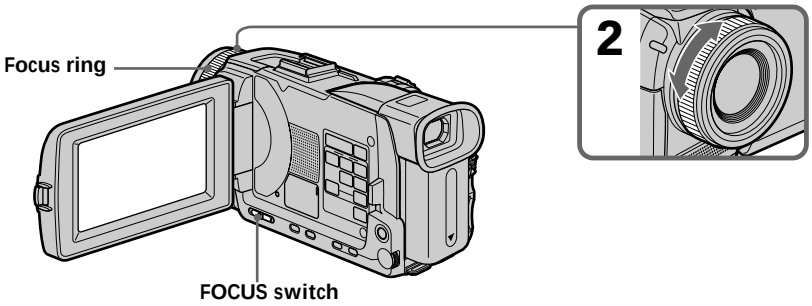

To return to the autofocus

Set FOCUS to AUTO.

To record distant subjects

When you set FOCUS to INFINITY, the lens focuses on and ▲ indicator appears. When you release FOCUS, your camcorder returns to the manual focus. Use this mode when your camcorder focuses on near objects even though you are trying to shoot a distant object.

To focus precisely

It is easier to focus on subjects if you adjust the zoom to shoot at the “W” (wide-angle) after focusing at the “T” (telephoto) position.

When you shoot close to the subject

Focus at the end of the “W” (wide-angle) position.

changes as follows:

when recording a distant subject

when the subject is too close to focus on

Focal distance information is displayed for about three seconds on the screen in the following cases:

– When switching the focus adjustment mode from autofocus to manual
– When turning the focus ring

Focal distance information

– This information aids focusing if it is not easy to focus on the subject, for example, when recording in the dark. Use this information as a rough guide to get a sharp focus.
– You cannot get correct information if you have attached a conversion lens (optional) to your camcorder.

Using the spot focus – Spot Focus

You can take a picture with the appropriate focus automatically for just the point you want to focus on and with its focus fixed.

(1) When the POWER switch is set to CAMERA or MEMORY / NETWORK (DCR-TRV50 only), set FOCUS to MAN.
(2) Press FN to display PAGE1.
(3) Press SPOT FOCUS. The SPOT FOCUS screen appears.
(4) Press the desired area in the frame on the LCD screen.
The indicator flashes on the LCD screen. The focus of the point you selected is adjusted.
(5) Press OK to return to PAGE1.

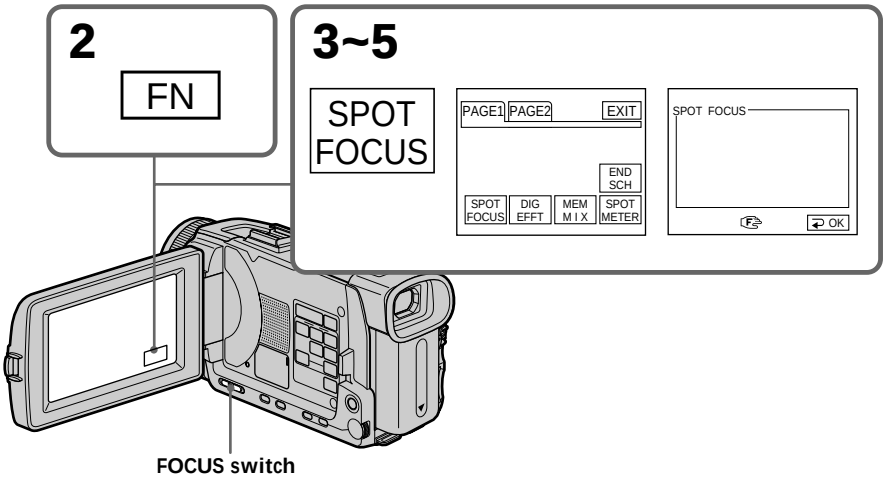

To return to FN

Press EXIT.

To return to the autofocus

Set FOCUS to AUTO.

The following functions do not work during Spot Focus:
– Exposure
– Fader
– Backlight
– PROGRAM AE

Focal distance information
It is not displayed on the screen.

Interval recording

You can make a time-lapse recording by setting the camcorder to automatically record and standby sequentially. You can achieve an excellent recording for flowering, gradual appearances, etc., with this function.

Example

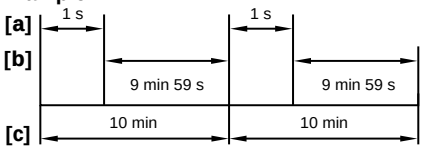

[a] REC TIME
[b] Waiting time
[c] INTERVAL

(1) In the standby, press MENU, then turn the SEL / PUSH EXEC dial to select INT. REC in [C], then press the dial (p. 201).
(2) Turn the SEL / PUSH EXEC dial to select SET, then press the dial.
(3) Turn the SEL / PUSH EXEC dial to set INTERVAL and REC TIME.
① Turn the SEL / PUSH EXEC dial to select INTERVAL, then press the dial.
② Turn the SEL / PUSH EXEC dial to select the desired interval time, then press the dial.
The time: 30SEC ⟷ 1MIN ⟷ 5MIN ⟷ 10MIN
③ Turn the SEL / PUSH EXEC dial to select REC TIME, then press the dial.
④ Turn the SEL / PUSH EXEC dial to select the desired recording time, then press the dial.
The time: 0.5SEC ⟷ 1SEC ⟷ 1.5SEC ⟷ 2SEC
⑤ Turn the SEL / PUSH EXEC dial to select ↩ RETURN, then press the dial.
(4) Turn the SEL / PUSH EXEC dial to select ON, then press the dial.
(5) Press MENU to erase the menu display. The INTERVAL indicator flashes.
(6) Press START / STOP to start interval recording. The INTERVAL indicator lights up.

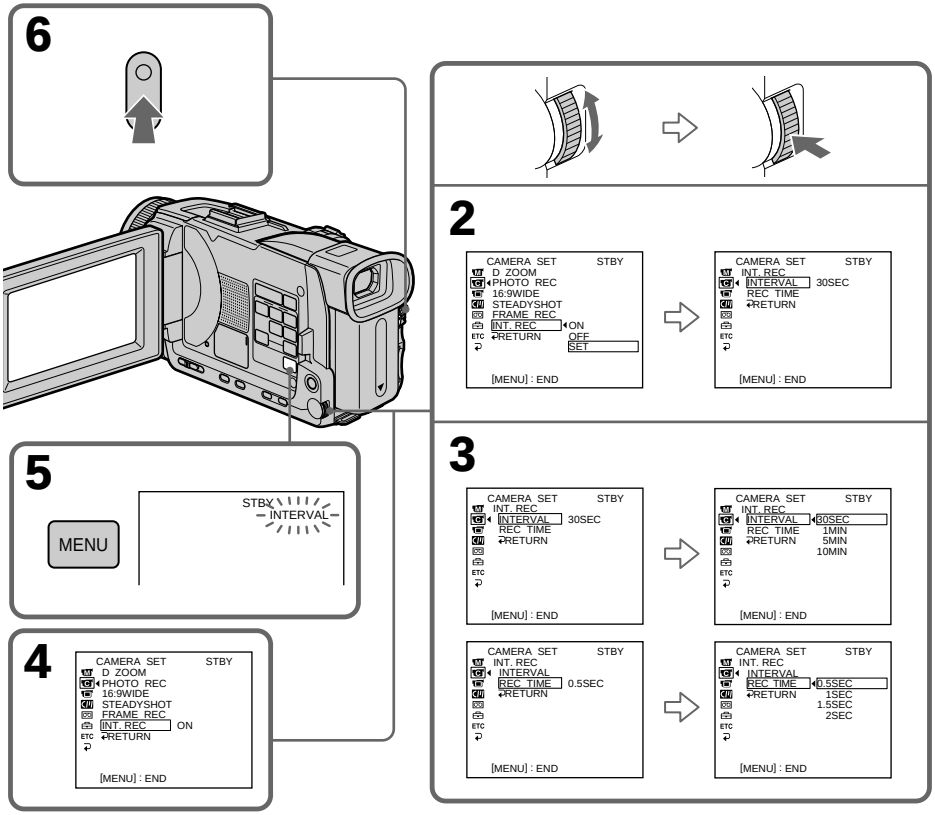

To cancel the interval recording

Perform either of the following:
– Set INT. REC to OFF in the menu settings.
– Set the POWER switch to other than CAMERA.

To perform normal recording during the watinig time

You can perform normal recording only once during the waiting time. Press START/STOP, and the indicator flashes and normal recording starts.
To stop normal recording, press START/STOP again. To restart interval recording, perform step 6.

On recording time

There may be a discrepancy in the recording time of up to +/– six frames from the selected time.

When pressing START/STOP during recording time

Interval recording stops. To restart it, perform step 6.

Frame by frame recording – Frame recording

You can make a recording with a stop-motion animated effect using frame recording. To create this effect, alternately move the subject a little and make a frame recording. We recommend that you use a tripod, and operate your camcorder using the Remote Commander after step 4.

(1) In the standby, press MENU, then turn the SEL / PUSH EXEC dial to select FRAME REC in , then press the dial (p. 201).
(2) Turn the SEL / PUSH EXEC dial to select ON, then press the dial.
(3) Press MENU to erase the menu display.
The FRAME REC indicator lights up.
(4) Press START / STOP to start frame recording. Your camcorder makes a recording for about six frames, and returns to recording standby.
(5) Move the subject, and repeat step 4.

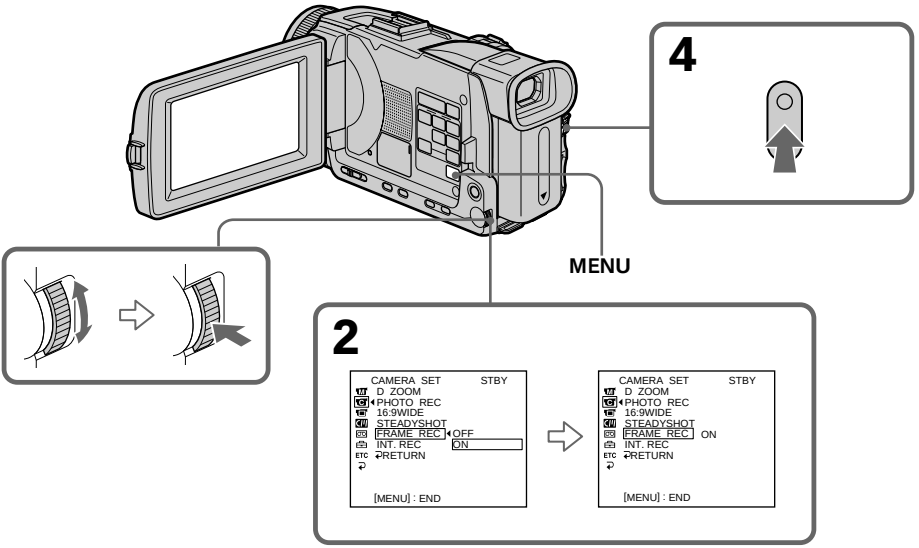

To cancel the frame recording

Perform either of the following:
– Set FRAME REC to OFF in the menu settings.
– Set the POWER switch to other than CAMERA.

Note

The remaining tape time is not indicated correctly if you use this function continuously.

When using the frame recording

The last recorded frame is longer than other frames.

Playing back tapes with picture effect

During playback, you can process a scene using the following picture effect:
NEG. ART, SEPIA, B&W and SOLARIZE.

(1) In the playback or playback pause, press MENU, then select P EFFECT in M with the SEL / PUSH EXEC dial (p. 200).
(2) Turn the SEL / PUSH EXEC dial to select the desired picture effect, then press the dial.
For details of each picture effect, see page 60.

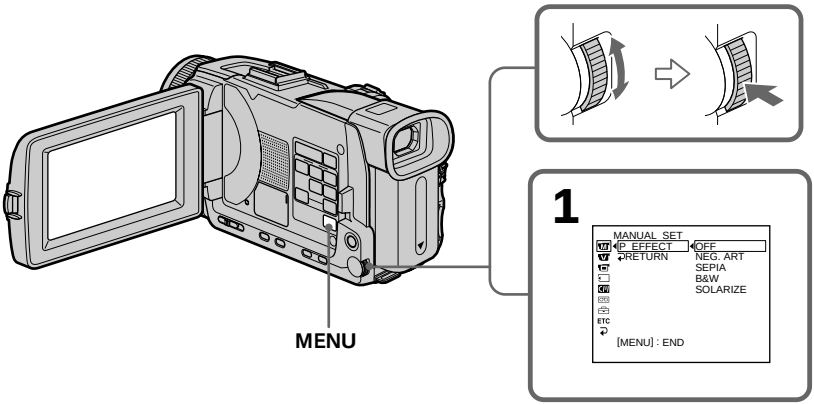

To cancel the picture effect

Set P EFFECT to OFF in the menu settings.

Notes

- You cannot process externally input scenes using picture effect.
- You cannot record images on a tape on your camcorder when you have processed the image using picture effect. However, you can record images on a "Memory Stick" (p. 135, 147), or on a VCR using your camcorder as a player.

Pictures processed by picture effect

Pictures processed by picture effect is not output through the i DV IN / OUT jack.

When you set the POWER switch to OFF (CHG) or stop playing back

The picture effect is automatically canceled.

Playing back tapes with digital effect

During playback, you can process a scene using the following digital effect: STILL, FLASH, LUMI. and TRAIL.

(1) In the playback or playback pause, press FN and select PAGE2.
(2) Press DIG EFFT. The screen to select a desired digital effect appears.
(3) Press a desired digital effect. In the STILL or LUMI., the picture where you select the mode is stored in memory as a still image.
(4) Press –/+ to adjust the effect. Refer to page 62 for details.
(5) Press ↩ OK to return to PAGE2.

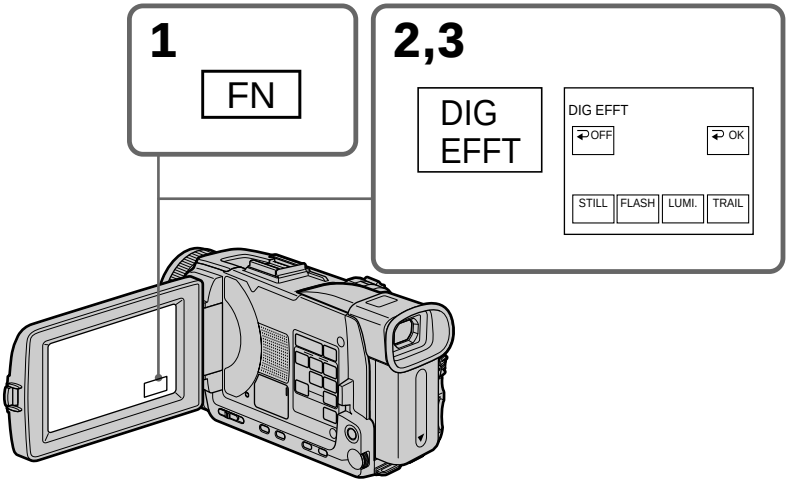

To return to FN

Press EXIT.

To cancel the digital effect

Press ↩ OFF to return to PAGE2.

Notes

- You cannot process externally input scenes using digital effect.
- You cannot record images on a tape on your camcorder when you have processed the image using digital effect. However, you can record images on a "Memory Stick" (p. 135, 147), or on a VCR using your camcorder as a player.

Pictures processed by digital effect

Pictures processed by digital effect is not output through the i DV IN / OUT jack.

When you set the POWER switch to OFF (CHG) or stop playing back

Digital effect is automatically canceled.

Enlarging images recorded on tapes – Tape PB ZOOM

You can enlarge playback images recorded on tapes. Besides the operation described here, your camcorder can enlarge still images recorded on "Memory Stick"s (p. 164).

(1) In the playback or playback pause, press FN and select PAGE2.
(2) Press PB ZOOM. The PB ZOOM screen appears.
(3) Press the area you want to enlarge in the frame on the PB ZOOM screen.
The area you pressed moves to the center of the screen, and the playback image is enlarged approximately at twice the size. If you press the other area again, the area moves to the center of the screen.
(4) Adjust the zoom ratio by the power zoom lever.
You can enlarge the image from approximately 1.1 times up to five times its size.
W: Decreases the zoom ratio.
T: Increases the zoom ratio.

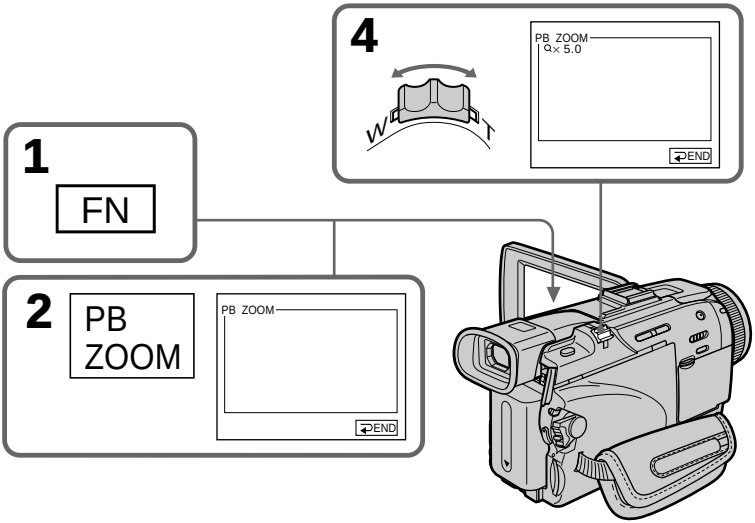

To cancel the PB ZOOM

Press ↩ END.

Notes

- You cannot process externally input scenes using the PB ZOOM.
- You cannot record images on a tape on your camcorder when you have processed the image using the tape PB ZOOM. However, you can record images on a VCR using your camcorder as a player.
- You cannot record moving pictures on a "Memory Stick" on your camcorder when you have processed the picture using the tape PB ZOOM.

The PB ZOOM is automatically canceled when you activate the following:

– Set the POWER switch to OFF (CHG).
– Stop playback.
– Press MENU.
– Insert a "Memory Stick."

Pictures in the PB ZOOM

Pictures in the PB ZOOM are not output through the i DV IN / OUT jack and the ψ (USB) jack.

In the PB ZOOM

If you press DISPLAY / TOUCH PANEL button, the frame on the PB ZOOM screen disappears. You cannot move the part you pressed to the center of the screen.

Edge of the enlarged image

The edge of the enlarged image cannot be displayed at the center of the screen.

Quickly locating a scene – ZERO SET MEMORY

Your camcorder goes forward or backward to automatically stop at a desired scene having a tape counter value of “0:00:00”. Use the Remote Commander for this operation.

(1) In the playback, press DISPLAY when the ZERO SET MEMORY indicator does not appear.
(2) Press ZERO SET MEMORY at the point you want to locate later. The tape counter shows “0:00:00” and then starts counting. The ZERO SET MEMORY indicator flashes.
(3) Press ■ when you want to stop playback.
(4) Press ◀◀ to rewind the tape to the tape counter’s zero point. The tape stops automatically when the tape counter reaches approximately zero. The ZERO SET MEMORY indicator disappears, and the time code appears.
(5) Press ▶. Playback starts from the counter’s zero point.

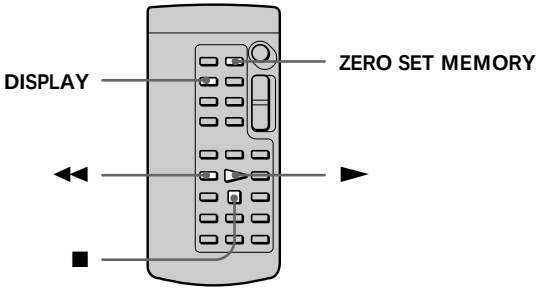

Notes
- When you press ZERO SET MEMORY before rewinding the tape, the zero set memory will be canceled.
- There may be a discrepancy of several seconds from the time code.
- The ZERO SET MEMORY indicator disappears when you press FN.

If a tape has a blank portion between recorded portions
The zero set memory may not work correctly.

Searching the boundaries of recorded tape by title – TITLE SEARCH

CM only

If you use a cassette with cassette memory, you can search for the boundaries of recorded tape by title. Use the Remote Commander for this operation.

Before operation
Set CM SEARCH in CM to ON in the menu settings. (The default setting is ON.)

(1) Set the POWER switch to VCR.
(2) Press SEARCH MODE on the Remote Commander repeatedly until the TITLE SEARCH indicator appears. The indicator changes as follows:

TITLE SEARCH → DATE SEARCH → PHOTO SEARCH → PHOTO SCAN → (no indicator) → TITLE SEARCH

(3) Press ⏮ or ⏭ on the Remote Commander to select the title for playback. Your camcorder automatically starts playback of the scene having the title that you selected.

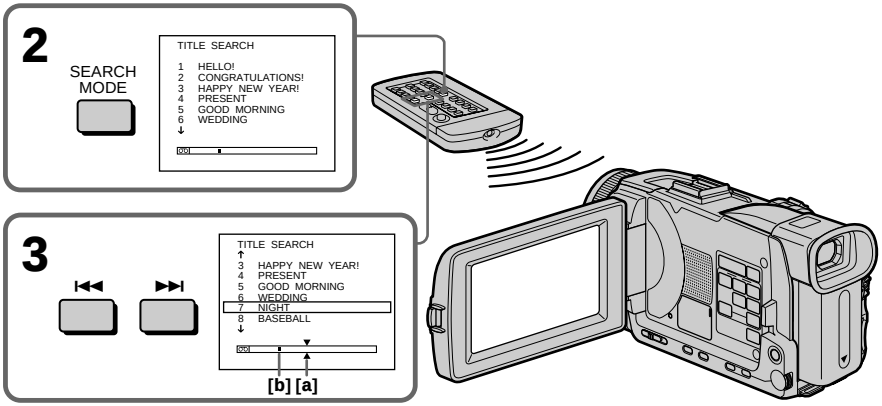

[a] Actual point you are trying to search for
[b] Present point on the tape

To stop searching

Press ■.

If you use a cassette without cassette memory
You cannot superimpose or search a title.

If a tape has a blank portion between recorded portions
The title search may not work correctly.

To superimpose a title
See page 110.

Searching a recording by date – DATE SEARCH

You can automatically search for the point where the recording date changes and start playback from that point **(date search)**. Use a cassette with cassette memory for convenience. Use the Remote Commander for this operation.
Use this function to check where recording dates change or to edit the tape at each recording date.

Searching for the date by using cassette memory

Before operation

- You can use this function only when playing back a cassette with cassette memory.
- Set CM SEARCH in CM to ON in the menu settings. (The default setting is ON.)

(1) Set the POWER switch to VCR.

(2) Press SEARCH MODE on the Remote Commander repeatedly until the DATE SEARCH indicator appears. The indicator changes as follows:

→ TITLE SEARCH → DATE SEARCH → PHOTO SEARCH →
(no indicator) ← PHOTO SCAN ←

(3) Press ⏮ or ⏭ on the Remote Commander to select the date for playback. Your camcorder automatically starts playback at the beginning of the selected date.

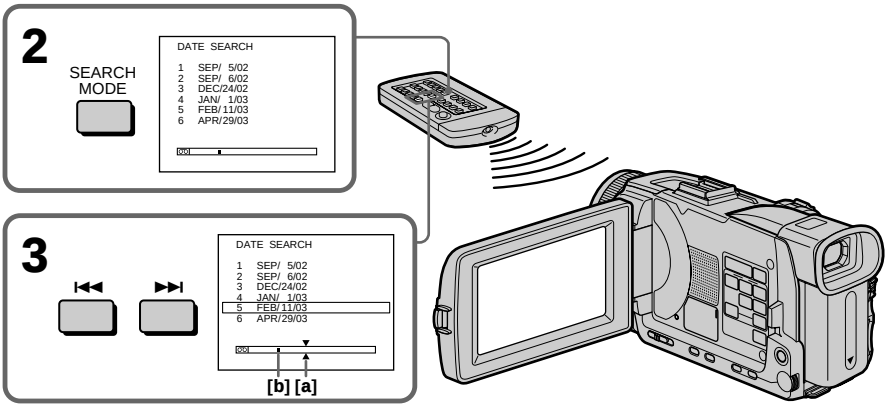

[a] Actual point you are trying to search for
[b] Present point on the tape

To stop searching

Press ■.

Note
If one day's recording is less than two minutes, your camcorder may not accurately find the point where the recording date changes.

If a tape has a blank portion between recorded portions
The date search may not work correctly.

Cassette memory
The tape with cassette memory can hold six recording dates. If you search among seven or more dates, see "Searching for the date without using cassette memory" below.

Searching for the date without using cassette memory

(1) Set the POWER switch to VCR.
(2) Press MENU, then select CM SEARCH in CM to OFF with the SEL/PUSH EXEC dial (p. 205).
(3) Press SEARCH MODE on the Remote Commander repeatedly until the DATE SEARCH indicator appears. The indicator changes as follows:

→DATE SEARCH → PHOTO SEARCH → PHOTO SCAN → (no indicator)

(4) Press ⏮ on the Remote Commander to search for the previous date or press ⏭ on the Remote Commander to search for the next date. Your camcorder automatically starts playback at the point where the date changes. Each time you press ⏮ or ⏭ your camcorder searches for the previous or next date.

To stop searching
Press ■.

Searching for a photo – PHOTO SEARCH/PHOTO SCAN

You can search for a still image you have recorded on a tape **(PHOTO SEARCH)**. You can also search for still images one after another and display each image for five seconds automatically regardless of cassette memory **(PHOTO SCAN)**. Use the Remote Commander for these operations.
Use this function to check or edit still images.

Searching for a photo by using cassette memory

Before operation

- You can use this function only when playing back a cassette with cassette memory.
- Set CM SEARCH in CM to ON in the menu settings. (The default setting is ON.)

(1) Set the POWER switch to VCR.
(2) Press SEARCH MODE on the Remote Commander repeatedly until the PHOTO SEARCH indicator appears. The indicator changes as follows:

TITLE SEARCH → DATE SEARCH → PHOTO SEARCH → PHOTO SCAN → (no indicator) → TITLE SEARCH

(3) Press ⏮ or ⏭ on the Remote Commander to select the date for playback. Your camcorder automatically starts playback of the photo having the date that you selected.

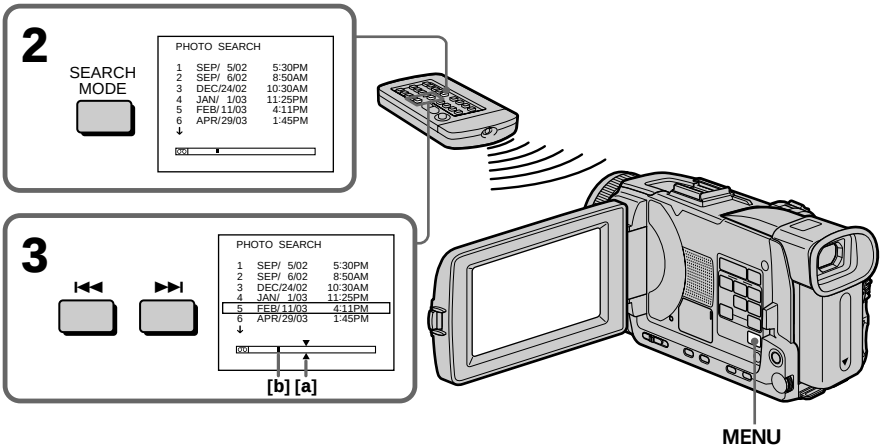

[a] Actual point you are trying to search for
[b] Present point on the tape

To stop searching

Press ■.

Searching for a photo without using cassette memory

(1) Set the POWER switch to VCR.
(2) Press MENU, then turn the SEL / PUSH EXEC dial to select CM SEARCH in CM to OFF, then press the dial (p. 205).
(3) Press SEARCH MODE on the Remote Commander repeatedly until the PHOTO SEARCH indicator appears. The indicator changes as follows:

→ DATE SEARCH → PHOTO SEARCH → PHOTO SCAN → (no indicator)

(4) Press ⏮ or ⏭ on the Remote Commander to select the photo for playback. Each time you press ⏮ or ⏭ your camcorder searches for the previous or next photo.
Your camcorder automatically starts playback of the photo.

To stop searching

Press ■.

Scanning photo

(1) Set the POWER switch to VCR.
(2) Press SEARCH MODE on the Remote Commander repeatedly until the PHOTO SCAN indicator appears. The indicator changes as follows:

→ TITLE SEARCH* → DATE SEARCH → PHOTO SEARCH →
(no indicator) ← PHOTO SCAN ←

* Displayed only when CM SEARCH is set to ON in the menu settings.

(3) Press ⏮ or ⏭ on the Remote Commander.
Each photo is played back for about five seconds automatically.

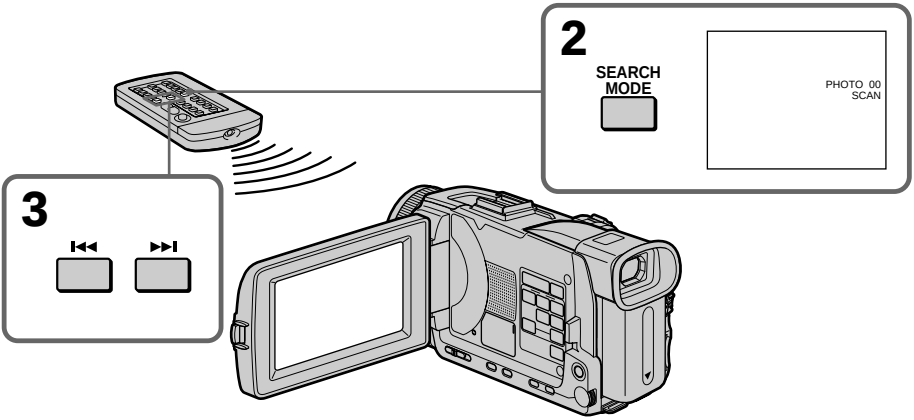

To stop scanning

Press ■.

If a tape has a blank portion between recorded portions
The photo search / photo scan may not work correctly.

The available number of photos that can be searched using the cassette memory
The available number is up to 12 photos. However, you can search 13 photos or more using the photo scan.

Dubbing a tape

Using the A/V connecting cable

You can dub or edit on the VCR connected to your camcorder using your camcorder as a player.
Connect your camcorder to the VCR using the A/V connecting cable supplied with your camcorder.

Before operation

- Set DISPLAY in ETC to LCD in the menu settings. (The default setting is LCD.)
- Press the following buttons to make the indicator disappear so that they will not be superimposed on the edited tape:
  On your camcorder:
  DISPLAY/TOUCH PANEL, DATA CODE
  On the Remote Commander:
  DISPLAY, DATA CODE, SEARCH MODE

(1) Insert a blank tape (or a tape you want to record over) into the VCR, and insert the recorded tape into your camcorder.
(2) Prepare the VCR for recording, then set the input selector to LINE.
Connect the A/V connecting cable to AUDIO/VIDEO jack.
Refer to the operating instructions of the VCR.
(3) Set the POWER switch to VCR on your camcorder.
(4) Play back the recorded tape on your camcorder.
(5) Start recording on the VCR. Refer to the operating instructions of your VCR.

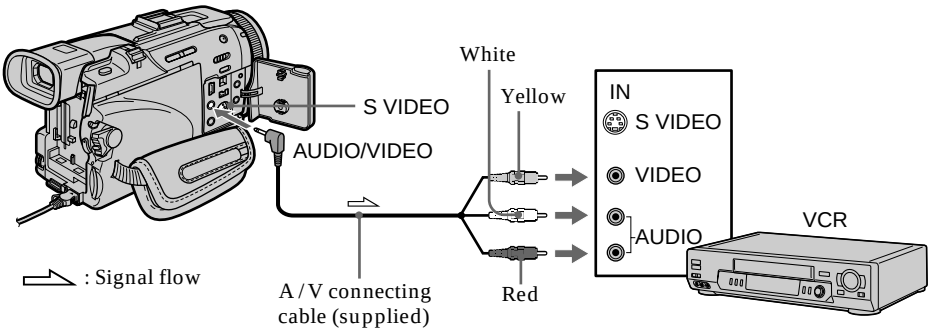

When you have finished dubbing a tape

Press ■ on both your camcorder and the VCR.

You can edit on VCRs that support the following systems:
8 mm, Hi8 Hi8, VHS VHS, S-VHS S-VHS, VHSC VHSC, S-VHSC S-VHSC,
Betamax, ED Beta ED Betamax, Mini DV mini DV, DV DV, Digital8, MICRO MV MICRO MV

If your VCR is a monaural type

Connect the yellow plug of the A/V connecting cable to the video input jack and the white or the red plug to the audio input jack on the VCR or the TV. When the white plug is connected, the left channel audio is output, and when the red plug is connected, the right channel audio is output.

If your VCR has an S video jack

Pictures can be reproduced more faithfully by using an S video cable (optional).
With this connection, you do not need to connect the yellow (video) plug of the A/V connecting cable.
Connect an S video cable (optional) to the S video jacks of both your camcorder and the VCR.
This connection produces higher quality DV format pictures.

Using the i.LINK cable (DV connecting cable)

Simply connect the i.LINK cable (DV connecting cable) (optional) to i DV IN / OUT jack on your camcorder and to DV IN on the DV products. With a digital-to-digital connection, video and audio signals are transmitted in digital form for high-quality editing. You cannot dub the titles, display indicators or the contents of cassette memory or letters on the "Memory Stick" index screen.
Set the input selector on the VCR to the DV input position if the VCR is equipped with the input selector.

(1) Insert a blank tape (or a tape you want to record over) into the VCR, and insert the recorded tape into your camcorder.
(2) Prepare the VCR for recording, then set the input selector to LINE. Refer to the operating instructions of the VCR.
(3) Set the POWER switch to VCR on your camcorder.
(4) Play back the recorded tape on your camcorder.
(5) Start recording on the VCR. Refer to the operating instructions of the VCR.

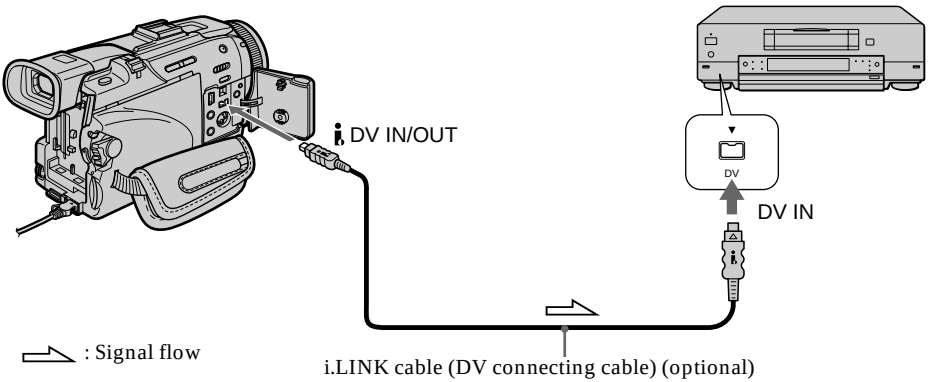

When you have finished dubbing a tape

Press ■ on both your camcorder and the VCR.

You can connect one VCR only using the i.LINK cable (DV connecting cable)
See page 225 for more information about i.LINK.

Pictures processed by the picture effect, the digital effect or PB ZOOM
Pictures processed by the picture effect, the digital effect or PB ZOOM are not output through the i DV IN / OUT jack.

If you record a playback pause picture with the i DV IN/OUT jack
The recorded picture becomes rough. Also, when you play back the picture using other video equipment, the picture may jitter.

Dubbing only desired scenes – Digital program editing (on tapes)

You can duplicate selected scenes (programs) for editing onto a tape without operating the VCR.
Scenes can be selected by frame. You can set up to 20 programs.
Your camcorder can also dub on "Memory Stick"s. See page 151 for more information.

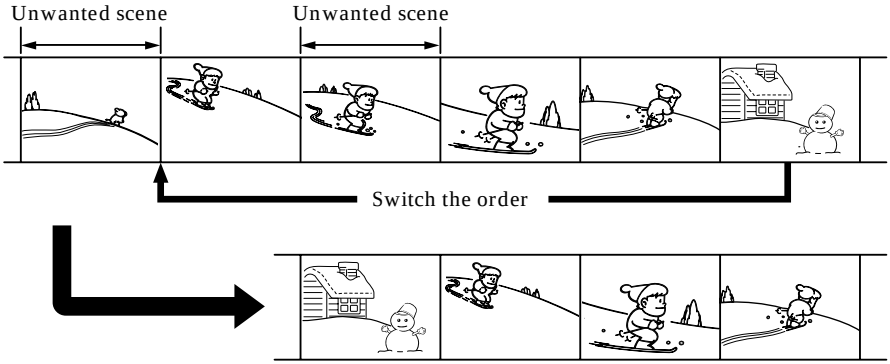

Before operating the Digital program editing on tapes recorded on other equipment

Step 1 Connecting the VCR (p. 89).
Step 2 Setting the VCR for operation (p. 90, 94).
Step 3 Adjusting the synchronization of the VCR (p. 95).
When you dub using the same VCR again, you can skip steps 2 and 3.

Using the Digital program editing on tapes recorded on other equipment

Operation 1 Making a program (p. 97).
Operation 2 Performing the program (dubbing a tape) (p. 99).

Note
When editing digital video on tapes, the operation signals cannot be sent with LANC.

Step 1: Connecting the VCR

You can connect both an A / V connecting cable and an i.LINK cable (DV connecting cable).
When you use the A / V connecting cable, connect the devices as illustrated on page 86.
When you use an i.LINK cable (DV connecting cable), connect the devices as illustrated on page 88.

If you connect using an i.LINK cable (DV connecting cable)
With a digital-to-digital connection, video and audio signals are transmitted in digital form for high-quality editing.

Step 2: Setting the VCR to operate with the A/V connecting cable

To edit using the VCR, send the control signal by infrared rays to the remote sensor on the VCR.
When you connect using an A/V connecting cable, follow the procedure below, steps **(1)** to **(4)**, to send the control signal correctly.

(1) Set the IR SETUP code

① Set the POWER switch to VCR on your camcorder.
② Turn the power of the connected VCR on, then set the input selector to LINE.
When you connect a video camera recorder, set its power switch to VCR/VTR.
③ Press MENU, then turn the SEL/PUSH EXEC dial to select VIDEO EDIT in ETC, then press the dial (p. 209).
④ Turn the SEL/PUSH EXEC dial to select TAPE, then press the dial.
⑤ Turn the SEL/PUSH EXEC dial to select EDIT SET, then press the dial.
⑥ Turn the SEL/PUSH EXEC dial to select CONTROL, then press the dial.
⑦ Turn the SEL/PUSH EXEC dial to select IR, then press the dial.
⑧ Turn the SEL/PUSH EXEC dial to select IR SETUP and turn the dial to select IR SETUP code number of your VCR, then press the dial.
Check the code in "About IR SETUP codes." (p. 91)

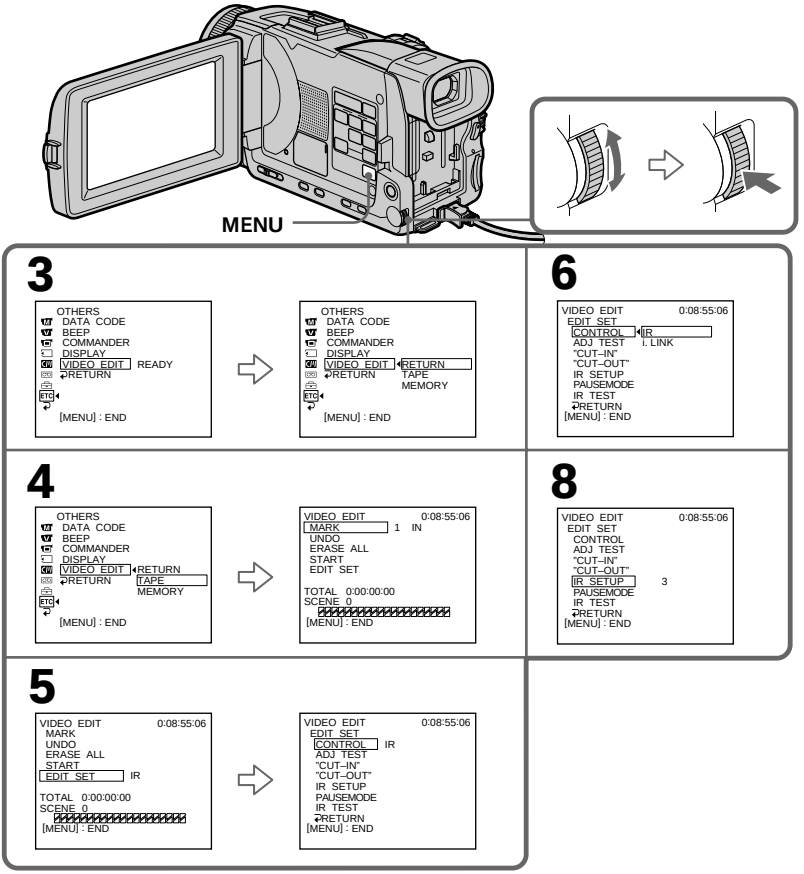

About IR SETUP codes

The IR SETUP code is stored in the memory of your camcorder. Be sure to set the correct code to match your VCR. The default setting is code number 3.

Brand	IR SETUP code
Sony	1, 2, 3, 4, 5, 6
Admiral (M. Wards)	89
Aiwa	47, 54, 80
Akai	49, 51
Audio Dynamic	21, 35
Bell&Howell (M. Wards)	36
Broksonic	21, 70, 82
Canon	77, 78
Citizen	47
Craig	47, 73
Curtis Mathis	8, 77, 80
Daewoo	26, 40, 77
DBX	21, 33, 35
Dimensia	8
Emerson	26, 48, 59, 70, 80, 81, 82
Fisher	36, 37, 44, 45
Funai	80
General Electric	8, 32*, 77, 94*, 101
Goldstar / LG	47
GO VIDEO	71
Hitachi	8, 42, 78
HQ	40
Instant Replay	77, 78
JC Penny	8, 21, 33, 35, 36, 42, 77
JVC	12, 13, 14, 21, 33, 35
Kenwood	21, 33, 35, 47
LXI (Sears)	36, 37, 42, 44, 45, 47, 49, 80
Magnavox	17, 77, 78, 83
Marantz	21, 33, 35
Marta	47
Memorex	37, 77
Minolta	8, 42

Brand	IR SETUP code
Mitsubishi / MGA	22, 23, 24, 28, 29
Multitech	23, 32, 80
NEC	21, 33, 35
Olympic	77, 78
Optimus	22
Orion	60
Panasonic	16, 17, 77, 78
Pentax	8, 42
Philco	26, 70, 77, 78
Philips	47, 77, 78, 83
Pioneer	78
Quasar	6, 16, 17, 77, 78
RCA / PROSCAN	7, 8, 16, 40, 41, 42, 77, 78, 78*, 83, 101
Realistic	22, 36, 37, 77, 80, 88
Sansui	21
Singer	73
Samsung	24, 24*, 32, 32*, 41, 94, 94*
Sanyo	26, 36, 37, 47
Scott	22, 23, 24, 28, 32, 37, 40, 41
Sharp	88, 89
Shintom	73
Signature 2000	80, 89
Sylvania	77, 78, 80, 83
Symphonic	80
Tashiro	47
Tatung	21, 33, 35
Teac	21, 33, 35, 80
Technics	77, 78
Toshiba	7, 40, 49
Wards	37, 47, 88, 89, 95
Yamaha	21, 33, 35, 36
Zenith	95

* TV / VCR component

Note on IR SETUP codes

Digital program editing is not possible if the VCR does not support IR SETUP codes.

(2) Setting the modes to cancel the recording pause on the VCR

① Turn the SEL / PUSH EXEC dial to select PAUSEMODE, then press the dial.
② Turn the SEL / PUSH EXEC dial to select the mode to cancel recording pause on the VCR, then press the dial.

Refer to the operating instructions of your VCR.

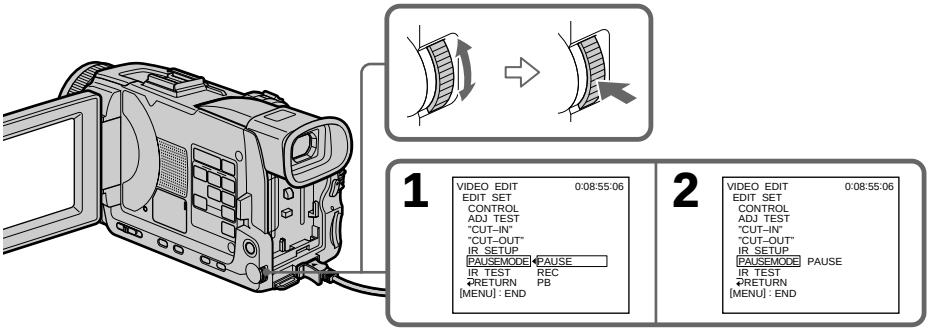

Buttons to cancel recording pause on the VCR

The buttons vary depending on your VCR. To cancel recording pause:
– Select PAUSE if the button to cancel recording pause is ❚❚.
– Select REC if the button to cancel recording pause is ●.
– Select PB if the button to cancel recording pause is ►.

(3) Setting your camcorder and the VCR to face each other

Locate the infrared rays emitter of your camcorder and face it towards the remote sensor of the VCR.
Set the devices about 30 cm (12 in.) apart, and remove any obstacles between the devices.

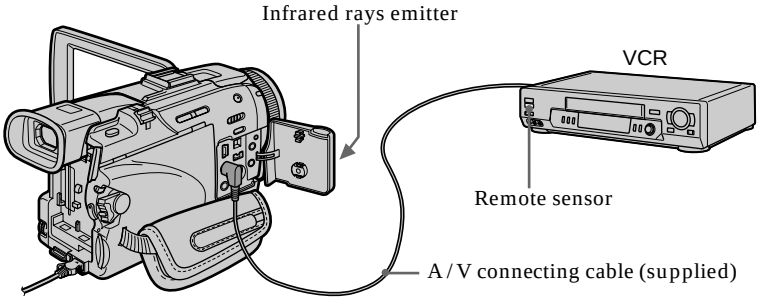

(4) Confirming VCR operation

① Insert a recordable tape into the VCR, then set to recording pause.
② Turn the SEL / PUSH EXEC dial to select IR TEST, then press the dial.
③ Turn the SEL / PUSH EXEC dial to select EXECUTE, then press the dial.
If the VCR starts recording, the setting is correct.
When recording is finished, the indicator changes to COMPLETE.

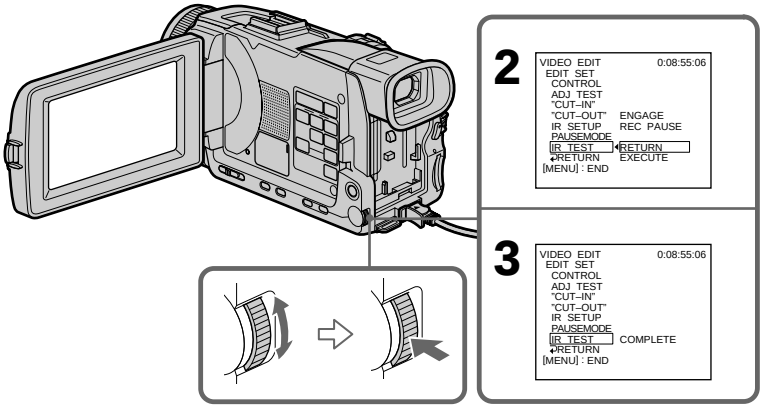

When the VCR does not operate correctly

- After checking the code in "About IR SETUP codes", set the IR SETUP or the PAUSEMODE again.
- Place your camcorder at least 30 cm (12 in.) away from the VCR.
- Refer to the operating instructions of your VCR.

Step 2: Setting the VCR to operate with the i.LINK cable (DV connecting cable)

When you connect using the i.LINK cable (DV connecting cable) (optional), follow the procedure below.

(1) Set the POWER switch to VCR on your camcorder.
(2) Turn the power of the connected VCR on, then set the input selector to DV input. When you connect a digital video camera recorder, set its power switch to VCR / VTR.
(3) Press MENU, then turn the SEL / PUSH EXEC dial to select VIDEO EDIT in ETC, then press the dial (p. 209).
(4) Turn the SEL / PUSH EXEC dial to select TAPE, then press the dial.
(5) Turn the SEL / PUSH EXEC dial to select EDIT SET, then press the dial.
(6) Turn the SEL / PUSH EXEC dial to select CONTROL, then press the dial.
(7) Turn the SEL / PUSH EXEC dial to select i.LINK, then press the dial.

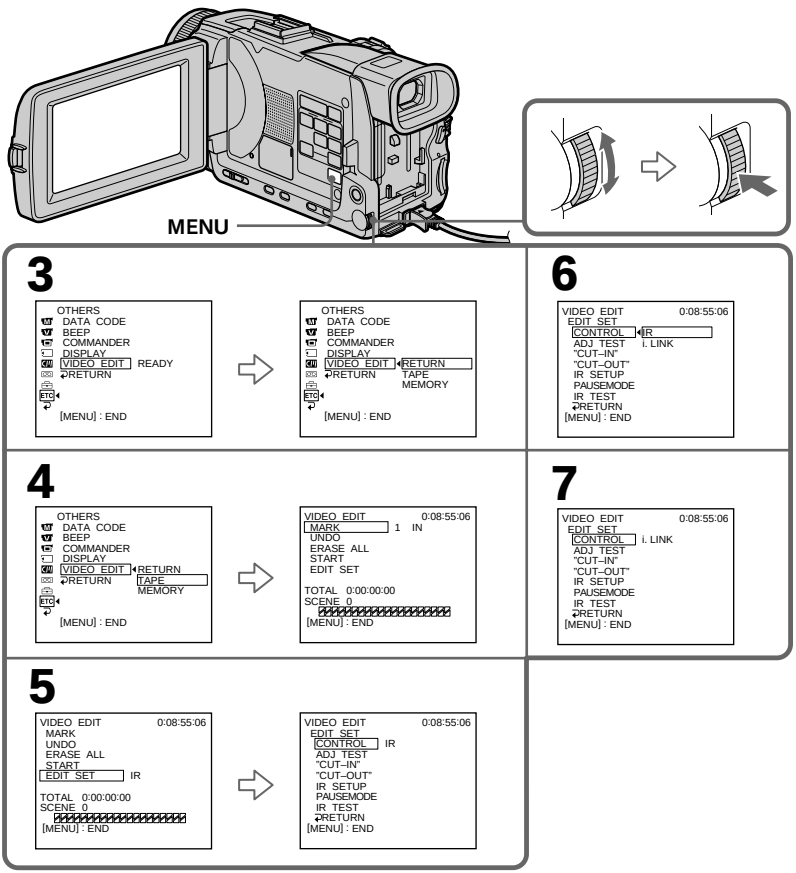

When you connect using the i.LINK cable (DV connecting cable)
You cannot dub the titles, display indicators.

Note
When you connect with an i.LINK cable (DV connecting cable), you may not be able to operate the dubbing function correctly, depending on the VCR.
Set CONTROL to IR in the menu settings of your camcorder.

Step 3: Adjusting the synchronization of the VCR

You can adjust the synchronization of your camcorder and the VCR. Have a pen and paper ready for notes. Before operation, eject a cassette from your camcorder.

(1) Insert a blank tape (or a tape you want to record over) into the VCR, then set to recording pause.
When you select i.LINK in CONTROL, you do not need to set to recording pause.
(2) Turn the SEL / PUSH EXEC dial to select ADJ TEST, then press the dial.
(3) Turn the SEL / PUSH EXEC dial to select EXECUTE, then press the dial.
IN and OUT are recorded on an image for five times each to calculate the number values for adjusting the synchronization.
The EXECUTING indicator flashes on the screen.
When finished, the indicator changes to COMPLETE.
(4) Rewind the tape in the VCR, then start slow playback.
Take a note of the first number value of each IN and the closing number value of each OUT.
(5) Calculate the average of all the first number values of each IN, and the average of all the last number values of each OUT.
(6) Turn the SEL / PUSH EXEC dial to select “CUT-IN”, then press the dial.
(7) Turn the SEL / PUSH EXEC dial to select the average number value of IN, then press the dial.
The calculated start position for recording is set.
(8) Turn the SEL / PUSH EXEC dial to select “CUT-OUT”, then press the dial.
(9) Turn the SEL / PUSH EXEC dial to select the average number value of OUT, then press the dial.
The calculated stop position for recording is set.
(10) Turn the SEL / PUSH EXEC dial to select ↩ RETURN, then press the dial.

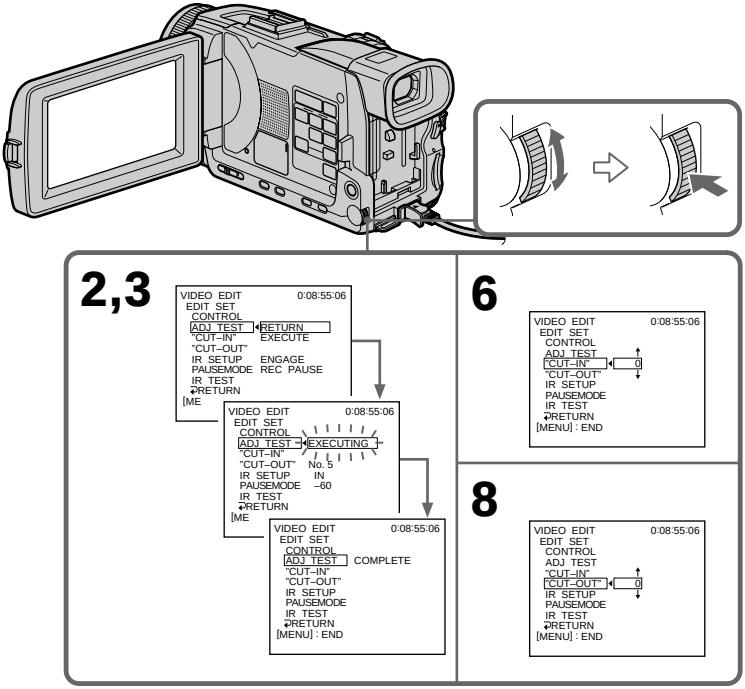

Notes

- When you complete step 3, the image used to adjust the synchronization is recorded for about 50 seconds.
- If you start recording from the very beginning of the tape, the first few seconds of the tape may not record properly. Be sure to allow about 10 seconds' lead before starting recording.
- When you connect with an i.LINK cable (DV connecting cable) you may not be able to operate the dubbing function correctly, depending on the VCR. Keep the i.LINK connection, and set CONTROL to IR in the menu settings. Video and audio are sent by digital signals.

Operation 1: Making a program

(1) Insert the tape for playback into your camcorder, and insert a tape for recording into the VCR.
(2) Press MENU and turn the SEL / PUSH EXEC dial to select VIDEO EDIT in ETC, then press the dial (p. 209).
(3) Turn the SEL / PUSH EXEC dial to select TAPE, then press the dial.
(4) Search for the beginning of the first scene you want to insert using the video operation buttons, then pause playback.
You can fine-adjust one frame at a time with EDITSEARCH.
(5) Press MARK on the Remote Commander, or turn the SEL / PUSH EXEC dial to select MARK, then press the dial.
The IN point of the first program is set, and the top part of the program mark changes to light blue.
(6) Search for the end of the first scene you want to insert using the video operation buttons, then pause playback.
(7) Press MARK on the Remote Commander, or the SEL / PUSH EXEC dial.
The OUT point of the first program is set, then the bottom part of the program mark changes to light blue.
(8) Repeat steps 4 to 7, then set the program.
When the program is set, the program mark changes to light blue.
You can set up to 20 programs in maximum.

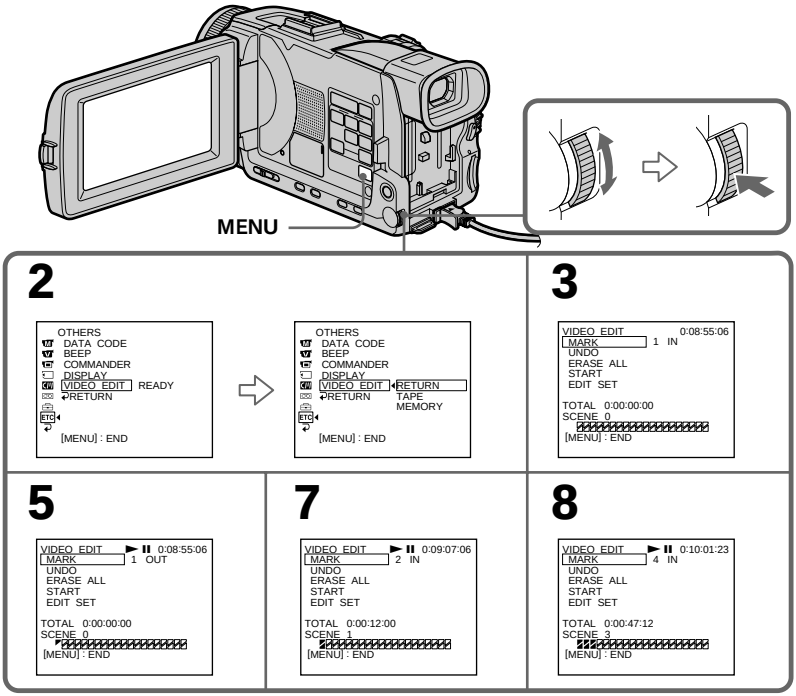

Erasing the program you have set

Erase OUT first and then IN from of the last program.

(1) Turn the SEL / PUSH EXEC dial to select UNDO, then press the dial.

(2) Turn the SEL / PUSH EXEC dial to select EXECUTE, then press the dial.
The last set program mark flashes, then the setting is canceled.

To cancel erasing

Turn the SEL / PUSH EXEC dial to select RETURN, then press the dial in step 2.

Erasing all programs

(1) Turn the SEL / PUSH EXEC dial to select VIDEO EDIT in the menu settings, then select TAPE, then press the dial.

(2) Turn the SEL / PUSH EXEC dial to select ERASE ALL, then select EXECUTE, then press the dial.
All the program marks flash, then the settings are canceled.

To cancel erasing all programs

Select RETURN with the SEL / PUSH EXEC dial in step 2.

To cancel a program you have set

Press MENU.
The program is stored in memory until the tape is ejected.

Note

You cannot operate recording during Digital program editing.

On a blank portion of the tape

You cannot set IN or OUT on a blank portion of the tape.

If there is a blank portion between IN and OUT on the tape

The total time code may not be displayed correctly.

Operation 2: Performing the program (Dubbing a tape)

Make sure that your camcorder and VCR are connected, and that the VCR is set to recording pause. When you use an i.LINK cable (DV connecting cable), this procedure is not necessary.
When you use a digital video camera recorder, set its power switch to VCR/VTR.

(1) Turn the SEL/PUSH EXEC dial to select VIDEO EDIT in the menu settings, then select TAPE, then press the dial.
(2) Turn the SEL/PUSH EXEC dial to select START, then select EXECUTE, then press the dial.
Search for the beginning of the first program, then start dubbing.
The program mark flashes.
The SEARCH indicator appears during search, and the EDITING indicator appears during edit on the screen.
The program mark changes to light blue after dubbing ends.
When dubbing ends, your camcorder and the VCR automatically stop.

To stop dubbing during editing

Press ■ using the video operation buttons.

To end the Digital program editing

Your camcorder stops when the dubbing ends. Then the display returns to VIDEO EDIT in the menu settings.
Press MENU to end the Digital program editing.

You cannot record on the VCR when:
– The tape has run out.
– The write-protect tab on the cassette is set to lock.
– The IR SETUP code is not correct. (when IR is selected)
– The button to cancel recording pause is not correct. (when IR is selected)

NOT READY appears on the LCD screen when:
– The program to operate the Digital program editing has not been made.
– i.LINK is selected but an i.LINK cable (DV connecting cable) is not connected.
– The power of the connected VCR is not turned on. (when you set i.LINK)

Recording video or TV programs

Using the A/V connecting cable

You can record a tape from another VCR or a TV program from a TV that has video / audio outputs. Use your camcorder as a recorder.

Before operation

Set DISPLAY in ETC to LCD in the menu settings. (The default setting is LCD.)

(1) Insert a blank tape (or a tape you want to record over) into your camcorder. If you are recording a tape from the VCR, insert a recorded tape into the VCR.
(2) Set the POWER switch to VCR on your camcorder.
(3) Press ● REC and the button on its right simultaneously on your camcorder, then immediately press ❚❚ on your camcorder.
(4) Press ► on the VCR to start playback if you record a tape from a VCR. Select a TV program if you are recording from a TV. The picture from a TV or VCR appears on the screen.
(5) Press ❚❚ on your camcorder at the scene where you want to start recording from.

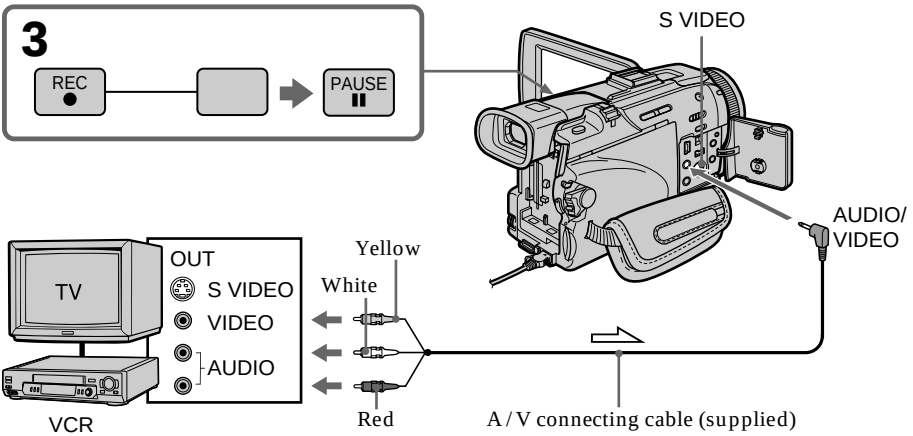

: Signal flow

When you have finished dubbing a tape

Press ■ on both your camcorder and the VCR.

Using the Remote Commander

In step 3, press ● REC and MARK simultaneously, then immediately press ❚❚. In step 5, press ❚❚ at the scene where you want to start recording from.