If your TV or VCR is a monaural type

Connect the yellow plug of the A/V connecting cable to the video output jack and the white or the red plug to the audio output jack on the VCR or the TV. When the white plug is connected, the left channel audio is recorded, and when the red plug is connected, the right channel audio is recorded.

If your TV or VCR has an S video jack

Pictures can be reproduced more faithfully by using an S video cable (optional).
With this connection, you do not need to connect the yellow (video) plug of the A/V connecting cable.
Connect an S video cable (optional) to the S video jacks of both your camcorder and the TV or VCR.
This connection produces higher quality DV format pictures.

Note on the Remote Commander

Your camcorder works in the commander mode VTR 2. Commander modes 1, 2 and 3 are used to distinguish your camcorder from other Sony VCRs to avoid erroneous remote control operation. If you use another Sony VCR in the commander mode VTR 2, we recommend changing the commander mode or covering the sensor of the VCR with black paper.

Using the i.LINK cable (DV connecting cable)

Simply connect the i.LINK cable (DV connecting cable) (optional) to i DV IN / OUT jack on your camcorder and to DV OUT on the DV products. With a digital-to-digital connection, video and audio signals are transmitted in digital form for high-quality editing.

(1) Insert a blank tape (or a tape you want to record over) into your camcorder, and insert the recorded tape into the VCR.
(2) Set the POWER switch to VCR on your camcorder.
(3) Press ● REC and the button on its right simultaneously on your camcorder, then immediately press ❚❚ on your camcorder.
(4) Press ► on the VCR to start playback. The picture to be recorded appears on the screen.
(5) Press ❚❚ on your camcorder at the scene where you want to start recording from.

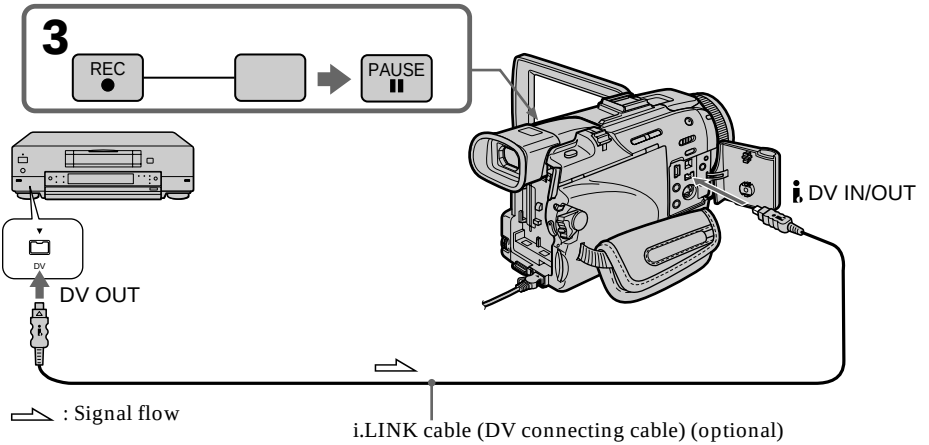

When you have finished dubbing a tape

Press ■ on both your camcorder and the VCR.

Using the Remote Commander

In step 3, press ● REC and MARK simultaneously, then immediately press ❚❚. In step 5, press ❚❚ at the scene where you want to start recording from.

You can connect one VCR only using the i.LINK cable (DV connecting cable).

During digital editing
The color of the display may be uneven. However, this does not affect the dubbed picture.

If you record playback pause picture with the i DV IN/OUT jack
The recorded picture becomes rough. When you play back the picture using your camcorder, the picture may jitter.

Before recording
Make sure that the DV IN indicator appears on the screen or in the viewfinder. The DV IN indicator may appear on both equipment.

Note on the Remote Commander
Your camcorder works in the commander mode VTR 2. Commander modes 1, 2 and 3 are used to distinguish your camcorder from other Sony VCRs to avoid erroneous remote control operation. If you use another Sony VCR in the commander mode VTR 2, we recommend changing the commander mode or covering the sensor of the VCR with black paper.

Inserting a scene from a VCR – Insert Editing

You can insert a new scene from a VCR onto your originally recorded tape by specifying the insert start and end points. Use the Remote Commander for this operation. Connections are the same as on page 100 or 102.
Insert a cassette containing the desired scene to insert into the VCR.

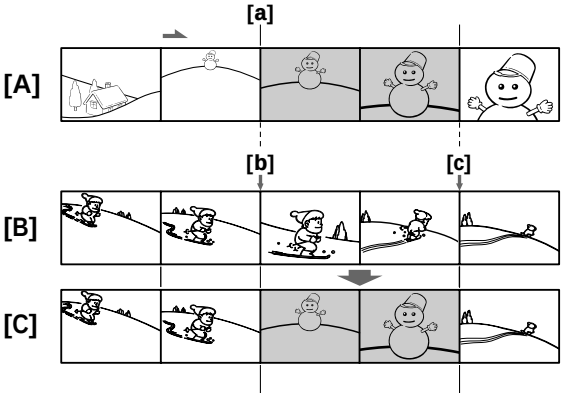

[A]: A tape that contains the scene to be superimposed
[B]: A tape before editing
[C]: A tape after editing

(1) Set the POWER switch to VCR on your camcorder.
(2) On the connected VCR, locate just before the insert start point **[a]**, then press ❚❚ to set the VCR to the playback pause.
(3) On your camcorder, locate the insert end point **[c]**. Then press ❚❚ to set your camcorder to the playback pause.
(4) Press ZERO SET MEMORY on the Remote Commander. The ZERO SET MEMORY indicator flashes and the end point of the insert is stored in memory. The tape counter shows "0:00:00."
(5) On your camcorder, locate the insert start point **[b]** by pressing ◀◀, then press ● REC and the button on its right simultaneously.
(6) First press ❚❚ on the VCR, and after a few seconds press ❚❚ on your camcorder to start inserting the new scene.
Inserting automatically stops near the zero point on the tape counter. Your camcorder automatically returns to the recording pause.

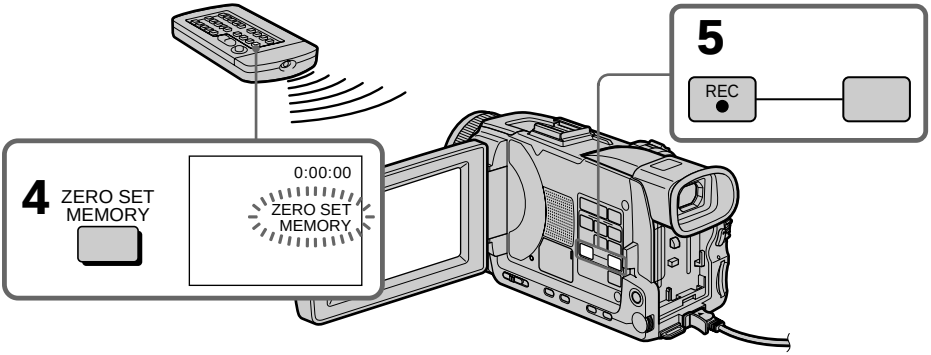

To change the insert end point

Press ZERO SET MEMORY again after step 5 to erase the ZERO SET MEMORY indicator and begin from step 3.

Using the Remote Commander

In step 5, press ● REC and MARK simultaneously, then immediately press ❚❚. In step 6, press ❚❚ at the scene where you want to start recording from.

Note

Pictures and sound recorded on the portion between the insert start and end points will be erased when you insert the new scene.

If you insert scenes on the tape recorded on another camcorder (including other DCR-TRV40/TRV50)

The pictures and sound may be distorted. We recommend that you insert scenes on a tape recorded on your camcorder.

When the inserted picture is played back

Pictures and sound may be distorted at the end of the inserted portion. This is not a malfunction.
Pictures and sound at the start point and the end point may be distorted in the LP mode.

To insert a scene without setting the insert end point

Skip steps 3 and 4. Press ■ when you want to stop inserting.

If you press FN

The ZERO SET MEMORY indicator is not displayed.

Note on the Remote Commander

Your camcorder works in the commander mode VTR 2. Commander modes 1, 2 and 3 are used to distinguish your camcorder from other Sony VCRs to avoid erroneous remote control operation. If you use another Sony VCR in the commander mode VTR 2, we recommend changing the commander mode or covering the sensor of the VCR with black paper.

Audio dubbing

You can record audio to add to the original sound on a tape by connecting audio equipment or a microphone. If you connect audio equipment, you can add sound to your recorded tape already recorded in the 12-bit sound mode by specifying the start and end points. The original sound will not be erased.
Use the Remote Commander for this operation.
Select one of the following connections to add audio.

Connecting the microphone with the MIC jack

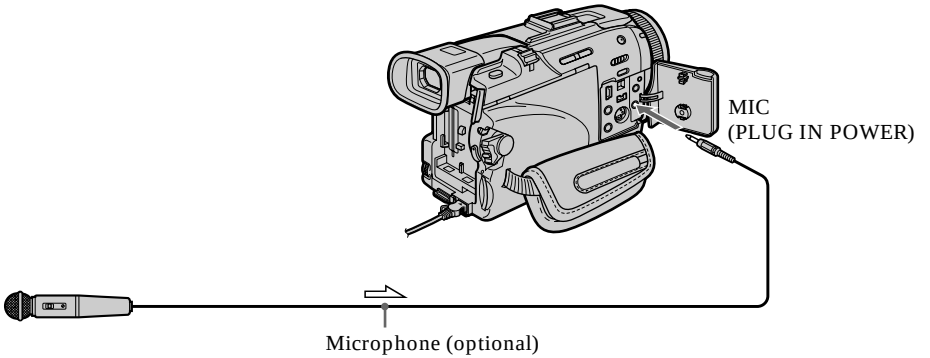

: Signal flow

You can check recorded picture and sound by connecting your camcorder to a TV with the A/V connecting cable.
Recorded sound is not output from the speaker. Check the sound by using a TV or headphones.

Connecting the microphone to the intelligent accessory shoe

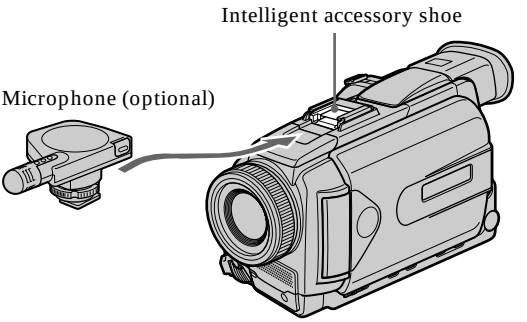

Connecting the A/V connecting cable to the AUDIO/VIDEO jack

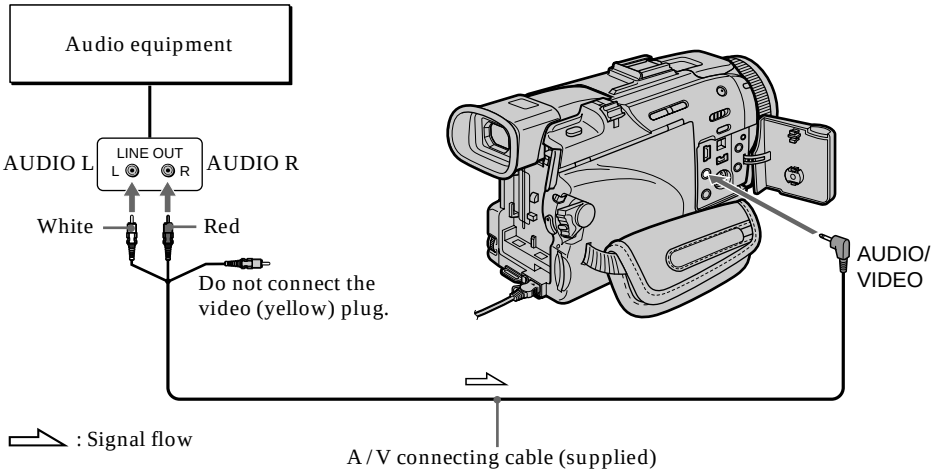

Dubbing with the built-in microphone

No connection is necessary.

Note

When dubbing with the AUDIO / VIDEO jack or the built-in microphone, pictures are not output through the S VIDEO jack or the AUDIO / VIDEO jack. Check the recorded picture on the screen. You can check the recorded sound by using headphones.

If you make all the connections

The audio input to be recorded will take precedence over others in the following order:

- MIC (PLUG IN POWER) jack
- Intelligent accessory shoe
- AUDIO / VIDEO jack
- Built-in microphone

Adding audio on a recorded tape

Choose a connection described on the previous pages, and connect audio equipment or microphone to your camcorder. Then follow the procedure below.

(1) Insert the recorded tape into your camcorder.
(2) Set the POWER switch to VCR on your camcorder.
(3) Locate the recording start point by pressing ►. Then press ❚❚ at the point where you want to start recording to set your camcorder to the playback pause.
(4) Press AUDIO DUB on the Remote Commander. The green ⊖❚❚ indicator appears on screen.
(5) Press ❚❚ and start playing back the audio you want to record at the same time. The new sound is recorded in stereo 2 (ST2) during playback. While audio is being recorded, the red ⊖ appears on the screen.
(6) Press ■ at the point where you want to stop recording.

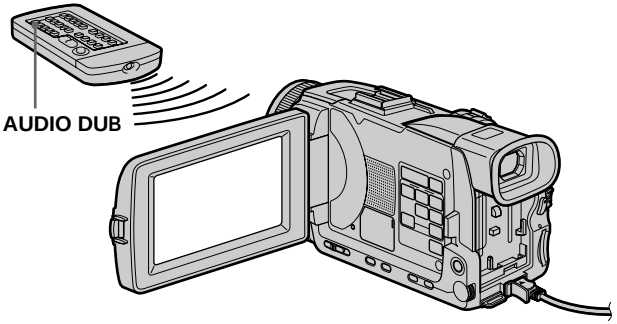

To add audio more precisely
Press ZERO SET MEMORY on the Remote Commander at the point where you want to stop recording later in the playback.
Carry out from steps 3 to 5. Recording automatically stops at the point where ZERO SET MEMORY was pressed.

Monitoring the new recorded sound

(1) Play back the tape on which you added audio.

(2) Turn the SEL / PUSH EXEC dial to select AUDIO MIX in in the menu settings, then press the dial.

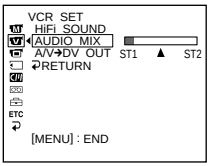

(3) Turn the SEL / PUSH EXEC dial to adjust the balance between the original sound (ST1) and the new sound (ST2), then press the dial.

Five minutes after you disconnect the power supply or remove the battery pack, the AUDIO MIX setting returns to original sound (ST1) only. The default setting is original sound only.

Notes

- New audio cannot be recorded on a tape already recorded in the 16-bit mode (32 kHz, 44.1 kHz or 48 kHz).
- New audio cannot be recorded on a tape already recorded in the LP mode.
- You cannot add audio with the i, DV IN / OUT jack.
- You cannot add audio on the blank portion of the tape.

If an i.LINK cable (DV connecting cable) (optional) is connected to your camcorder
You cannot add audio to a recorded tape.

We recommend that you add audio on a tape recorded with your camcorder
If you add audio on a tape recorded with another camcorder (including other DCR-TRV40 / TRV50), the sound quality may become worse.

If you set the write-protect tab of the cassette to lock
You cannot record on a tape. Slide the write-protect tab to release the write protection.

Superimposing a title

CM only

If you use a tape with cassette memory, you can superimpose the title. When you play back the tape, the title is displayed for five seconds from the point where you superimposed it.

(1) In the recording , recording standby, playback or playback pause, press MENU, then select TITLE in CM with the SEL / PUSH EXEC dial (p. 205).
(2) Turn the SEL / PUSH EXEC dial to select 🗀, then press the dial.
(3) Turn the SEL / PUSH EXEC dial to select the desired title, then press the dial. The title flashes.
(4) Change the color, size, or position, if necessary.
① Turn the SEL / PUSH EXEC dial to select COLOR, SIZE or POSITION, then press the dial. The selected item appears.
② Turn the SEL / PUSH EXEC dial to select the desired item, then press the dial.
③ Repeat steps ① and ② until the title is laid out as desired.
(5) Press the SEL / PUSH EXEC dial again to complete the setting.
In the recording, playback or playback pause:
The TITLE SAVE indicator appears on the screen for five seconds and the title is set.
In the standby:
The TITLE indicator appears. When you press START / STOP to start recording, TITLE SAVE appears on the screen for five seconds, and the title is set.

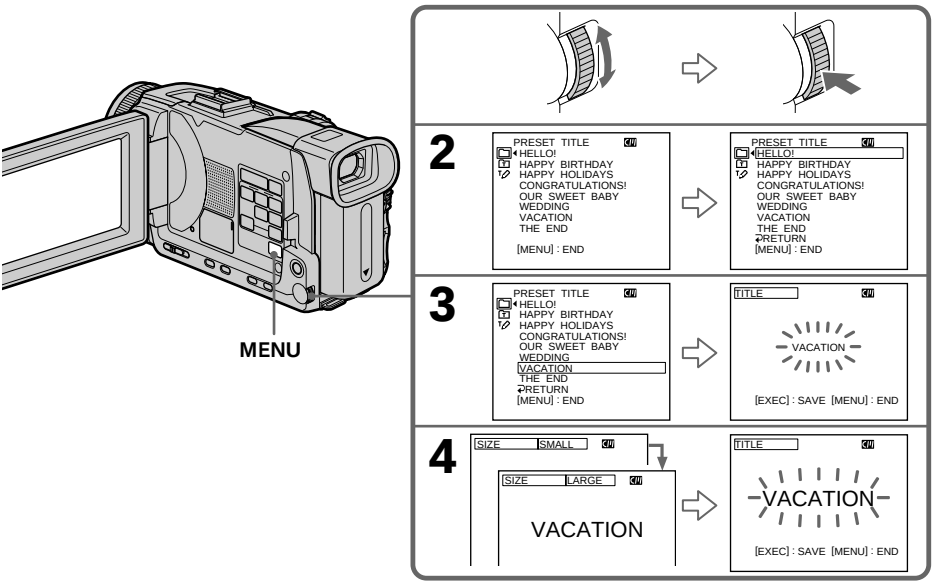

If you set the write-protect tab of the cassette to lock
You cannot superimpose or erase the title. Slide the write-protect tab to release the write protection.

To use a custom title
If you want to use a custom title, select [T] in step 2.

If the tape has a blank portion
You cannot superimpose a title on the portion.

If the tape has a blank portion between recorded portions
Titles may not be displayed correctly.

Titles superimposed with your camcorder
- Titles are displayed by only the Mini DV DV format video equipment with an index titler.
- The point you superimposed the title may be detected as an index signal when searching a recording with other video equipment.

If the tape has too many index signals
You may not be able to superimpose a title because the cassette memory becomes full. In this case, delete data you do not need.

To not display titles
Set TITLE DSPL to OFF in the menu settings (p. 205).

Title setting
- The title color changes as follows:
  WHITE ⟷ YELLOW ⟷ VIOLET ⟷ RED ⟷ CYAN ⟷ GREEN ⟷ BLUE
- The title size changes as follows:
  SMALL ⟷ LARGE
  You cannot input 13 characters or more in LARGE size. If you input more than 12 characters, the title size returns to SMALL even if you select LARGE.
- If you select SMALL, you have nine choices for the title position.
  If you select LARGE, you have eight choices for the title position.

One cassette can have up to about 20 titles, with each title comprising five characters
However, if the cassette memory is full with date, photo and cassette label data, one cassette can have only up to about 11 titles each comprising five characters.
Cassette memory capacity is as follows:
– six date data
– 12 photo data
– one cassette label

If the "CHI FULL" mark appears
The cassette memory is full. Erase unwanted titles.

Erasing a title

(1) Set the POWER switch to CAMERA or VCR.
(2) Press MENU, then turn the SEL / PUSH EXEC dial to select TITLEERASE in CM, then press the dial (p. 205).
(3) Turn the SEL / PUSH EXEC dial to select the title you want to erase, then press the dial. ERASE OK ? indicator appears.
(4) Make sure that the title is the one you want to erase, and turn the SEL / PUSH EXEC dial to select OK, then press the dial. OK changes to EXECUTE.
(5) Turn the SEL / PUSH EXEC dial to select EXECUTE, then press the dial.
The ERASING flashes on the screen. When the title is erased, the COMPLETE is displayed.

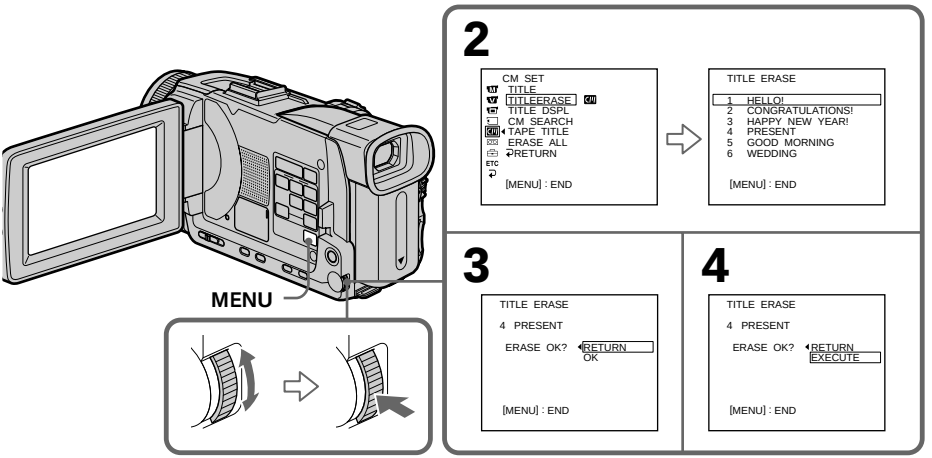

To cancel erasing a title

Select RETURN in step 4 or 5.

Making your own titles

You can make up to two titles and store them in the memory of your camcorder. Each title can have up to 20 characters.

(1) Set the POWER switch to CAMERA or VCR.
(2) Press MENU, then turn the SEL / PUSH EXEC dial to select TITLE in CAM, then press the dial (p. 205).
(3) Turn the SEL / PUSH EXEC dial to select T, then press the dial.
(4) Turn the SEL / PUSH EXEC dial to select CUSTOM1 SET or CUSTOM2 SET, then press the dial.
(5) Turn the SEL / PUSH EXEC dial to select the column of the desired character, then press the dial.
(6) Turn the SEL / PUSH EXEC dial to select the desired character, then press the dial.
(7) Repeat steps 5 and 6 until you have selected all characters and completed the title.
(8) To finish making your own titles, turn the SEL / PUSH EXEC dial to select [SET], then press the dial.

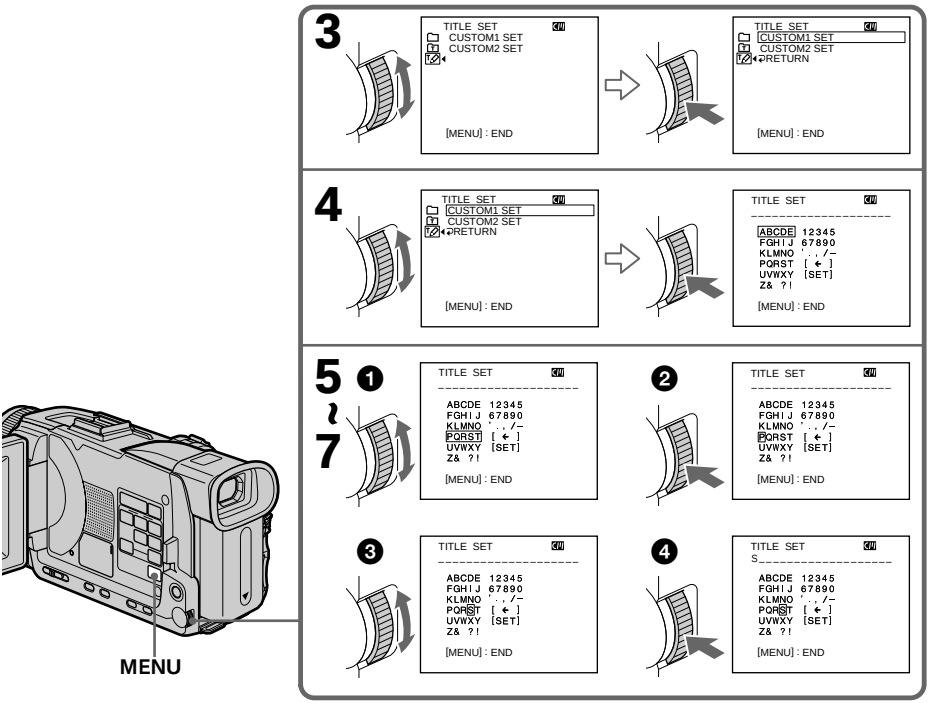

Editing

To change a title you have stored

In step 4, select CUSTOM1 SET or CUSTOM2 SET, depending on which title you want to change, then press the SEL / PUSH EXEC dial. Turn the SEL / PUSH EXEC dial to select [←], then press the dial to delete the title. The last character is erased. Enter the new title as desired.

If you take five minutes or longer to enter characters in the standby while a cassette is in your camcorder

The power automatically goes off. The characters you have entered remain stored in memory. Set the POWER switch to OFF (CHG) once and then to CAMERA again, then proceed from step 1.
We recommend setting the POWER switch to VCR or removing the cassette so that your camcorder does not automatically turn off while you are entering title characters.

To delete the title

Select [←]. The last character is erased.

To enter a space

Select [Z& ? !], then select the blank part.

Labeling a cassette

CM only

If you use a cassette with cassette memory, you can label a cassette. Labels can consist of up to 10 characters and is stored in cassette memory. When you insert the labeled cassette and when the POWER switch is set to CAMERA or VCR, the label is displayed for about five seconds.

(1) Insert the cassette you want to label.
(2) Set the POWER switch to CAMERA or VCR.
(3) Press MENU, then turn the SEL / PUSH EXEC dial to select TAPE TITLE in CM, then press the dial (p. 205). Tape title display appears.
(4) Turn the SEL / PUSH EXEC dial to select the column of the desired character, then press the dial.
(5) Turn the SEL / PUSH EXEC dial to select the desired character, then press the dial.
(6) Repeat steps 4 and 5 until you finish the label.
(7) Turn the SEL / PUSH EXEC dial to select [SET], then press the dial.
The label is stored in memory.

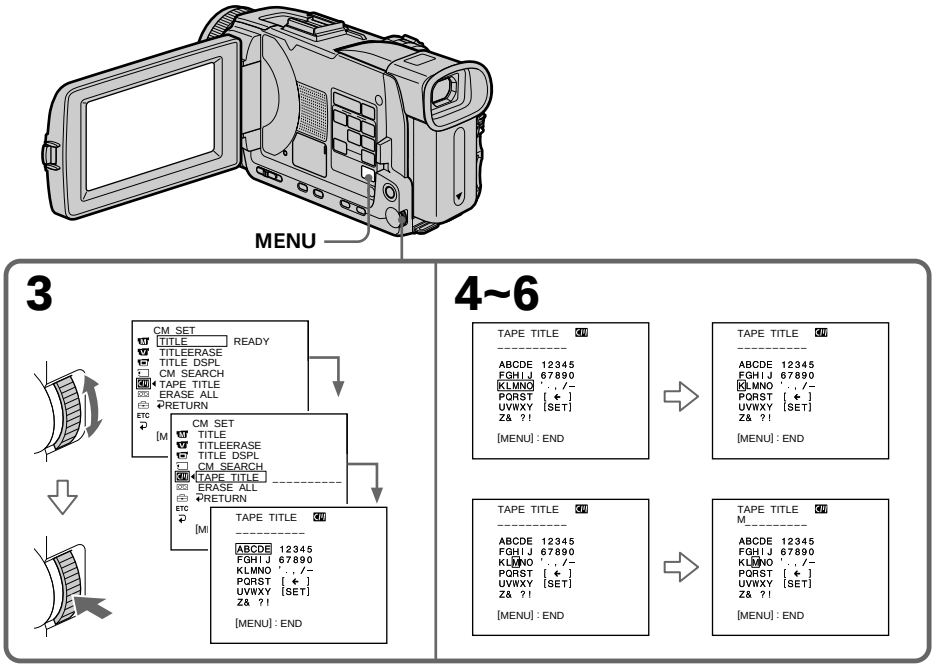

To erase the label you have made

In step 4 turn the SEL / PUSH EXEC dial to select [←], then press the dial. The last character is erased.

To change the label you have made

Insert the cassette to change the label, and operate in the same way to make a new label.

If you set the write-protect tab of the cassette to lock

You cannot label the tape. Slide the write-protect tab to release the write protection.

If the tape has too many index signal

You may not be able to label a cassette because the cassette memory becomes full. In this case, delete data you do not need.

If you have superimposed titles in the cassette

When the label is displayed, up to four titles also appear.

When the "-----" indicator has fewer than 10 spaces

The cassette memory is full.
The "-----" indicates the number of characters you can select for the label.

To enter a space

Select [Z& ? !], then select the blank part.

Erasing all the data in cassette memory

You can erase all the data in cassette memory at once.

(1) Set the POWER switch to CAMERA or VCR.
(2) Press MENU, then turn the SEL / PUSH EXEC dial to select ERASE ALL in CM, then press the dial (p. 205).
(3) Turn the SEL / PUSH EXEC dial to select OK, then press the dial. OK changes to EXECUTE.

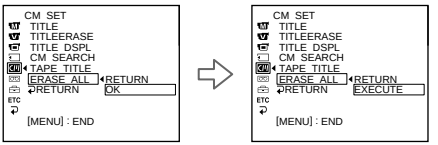

(4) Turn the SEL / PUSH EXEC dial to select EXECUTE, then press the dial. ERASING flashes on the screen. When all the data is erased, COMPLETE is displayed.

To cancel deleting

Select RETURN with the SEL / PUSH EXEC dial in step 3 or 4.

Using a "Memory Stick" – Introduction

You can record and play back images on a "Memory Stick" supplied with your camcorder. You can easily play back, record or delete images. You can exchange image data with other equipment such as your computer etc., using the USB cable for "Memory Stick" supplied with your camcorder.

On file format

Still image (JPEG)

Your camcorder compresses image data in JPEG format (extension .jpg).

Moving picture (MPEG)

Your camcorder compresses picture data in MPEG format (extension .mpg).

Typical image data file name

Still image

100-0001: This file name appears on the screen of your camcorder.
Dsc00001.jpg: This file name appears on the display of your computer.

Moving picture

MOV00001: This file name appears on the screen of your camcorder.
Mov00001.mpg: This file name appears on the display of your computer.

Using a "Memory Stick"

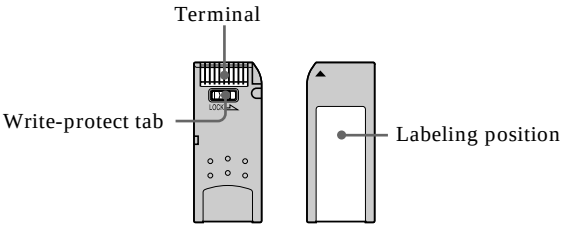

- You cannot record or erase images when the write-protect tab on the "Memory Stick" is set to LOCK.
- The position and shape of the write-protect tab may be different depending on the model.
- We recommend backing up important data on the hard disk of your computer.
- Image data may be damaged in the following cases:
  – If you eject the "Memory Stick" or turn the power off during reading or writing.
  – If you use "Memory Stick"s near static electricity or magnetic fields.
- Prevent metallic objects or your finger from coming into contact with the metal parts of the terminal.
- Stick the label at the labeling position.
- Do not bend, drop or apply strong shock to "Memory Stick"s.
- Do not disassemble or modify "Memory Stick"s.
- Do not let "Memory Stick"s get wet.
- Do not use or keep "Memory Stick"s in locations that are:
  – Extremely hot such as in a car parked in the sun or under the scorching sun.
  – Under direct sunlight
  – Very humid or subject to corrosive gases
- When you carry or store a "Memory Stick," put it in its case.

"Memory Stick"s formatted on computer

"Memory Stick"s formatted on Windows OS or Macintosh computers are not guaranteed compatible with your camcorder.

Notes on image data compatibility

- Image data files recorded on "Memory Stick"s by your camcorder conform with the Design Rules for Camera File Systems universal standard established by the JEITA (Japan Electronics and Information Technology Industries Association). You cannot play back on your camcorder still images recorded on other equipment (DCR-TRV890E / TRV900 / TRV900E or DSC-D700 / D770) that does not conform with this universal standard. (These models are not sold in some areas.)
- If you cannot use the "Memory Stick" that is used with other equipment, format it with this camcorder (p. 204). However, formatting erases all information on the "Memory Stick."

- "Memory Stick" and MEMORY STICK ™ are trademarks of Sony Corporation.
- All other product names mentioned here may be the trademarks or registered trademarks of their respective companies.
  "TM" and "®" are not mentioned in each case in this manual.

Inserting a "Memory Stick"

Insert a "Memory Stick" in the "Memory Stick" slot as far as it can go with the ▶ mark facing as illustrated.

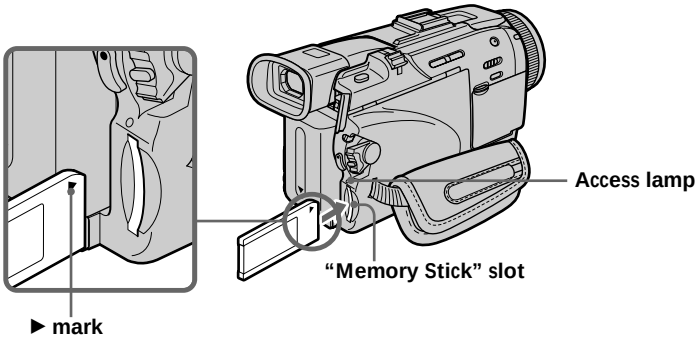

Ejecting a "Memory Stick"

Press the "Memory Stick" once lightly.

While the access lamp is lit or flashing
Do not shake or knock your camcorder because your camcorder is reading the data from the "Memory Stick" or recording the data on the "Memory Stick." Do not turn the power off, eject a "Memory Stick." Otherwise, image data may become damaged.

If "MEMORY STICK ERROR" is displayed
Reinsert "Memory Stick" a few times. The "Memory Stick" may be damaged if the indicator is still displayed. If this occurs, use another "Memory Stick."

Using a touch panel

Most operation buttons for use of "Memory Stick"s are displayed on the LCD screen. Touch the LCD screen directly with your finger or the supplied stylus (DCR-TRV50 only) to operate each function.

(1) Set the POWER switch to MEMORY / NETWORK (DCR-TRV50 only). Make sure that the LOCK switch is set to the left (unlock) position.
(2) Press OPEN to open the LCD panel. Operation buttons appear on the LCD screen. You can switch the memory playback / memory camera by pressing PLAY / CAM.
(3) Press FN. Operation buttons appear on the LCD screen.
(4) Press PAGE2 to go to PAGE2. Operation buttons appear on the LCD screen.
(5) Press PAGE3 to go to PAGE3. Operation buttons appear on the LCD screen.
(6) Press a desired operation item.
Refer to relevant pages for each function.

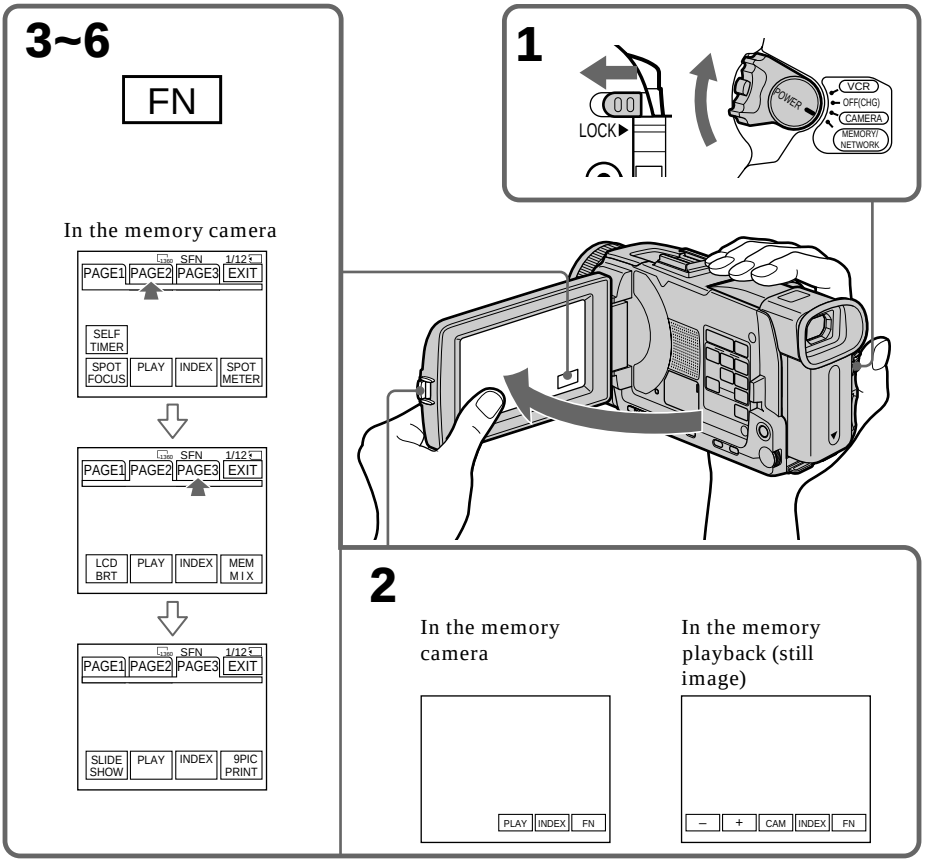

To return to FN
Press EXIT.

To execute settings
Press ↩ OK.

To cancel settings
Press ↩ OFF to return to PAGE1/PAGE2/PAGE3.

Notes
- When using the touch panel, press operation buttons with your thumb supporting the LCD screen from the back side of it or press those buttons lightly with your index finger.
- Do not press the LCD screen with sharp objects other than the supplied stylus. (DCR-TRV50 only)
- Do not press the LCD screen too hard.
- Do not touch the LCD screen with wet hands.
- If FN is not on the LCD screen, touch the LCD screen lightly to make it appear. You can control the display with DISPLAY/TOUCH PANEL on your camcorder.
- When operation buttons do not work even if you press them, an adjustment is required (CALIBRATION) (p. 230).
- When the LCD screen gets dirty, clean it with the supplied cleaning cloth.

When executing each item
The green bar appears above the item.

If the items are not available
The color of the items changes to gray.

Press FN to display the following buttons:
In the memory camera

PAGE1	SELFTIMER, SPOT FOCUS, PLAY, INDEX, SPOT METER
PAGE2	LCD BRT, PLAY, INDEX, MEM MIX
PAGE3	SLIDE SHOW, PLAY, INDEX, 9PIC PRINT

In the memory playback

PAGE1	PB ZOOM, CAM, INDEX, DELETE, [+], [–]
PAGE2	LCD BRT, CAM, INDEX, DATA CODE, [+], [–]
PAGE3	SLIDE SHOW, CAM, INDEX, 9PIC PRINT, [+], [–]

Selecting the still image quality

You can select the image quality in still image recording. The default setting is SUPER FINE.

(1) Set the POWER switch to MEMORY / NETWORK (DCR-TRV50 only) or VCR. Make sure that the LOCK switch is set to the left (unlock) position.
(2) Press MENU, then select STILL SET in ▭ with the SEL / PUSH EXEC dial (p. 203).
(3) Turn the SEL / PUSH EXEC dial to select QUALITY , then press the dial.
(4) Turn the SEL / PUSH EXEC dial to select the desired image quality , then press the dial.

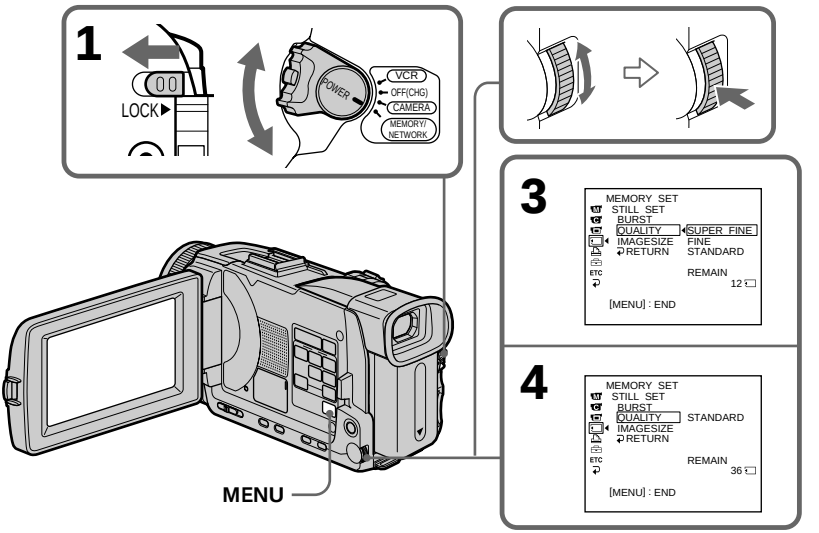

Image quality settings

Setting	Meaning
SUPER FINE (SFN)	This is the highest image quality in your camcorder. The number of still images you can record is less than in FINE mode. Super fine images are compressed to about 1/3.
FINE (FINE)	Use this mode when you want to record high quality images. Fine images are compressed to about 1/6.
STANDARD (STD)	This is the standard image quality in your camcorder. Standard images are compressed to about 1/10.

Note

In some cases, changing the image quality may not affect the image quality, depending on the type of images you are shooting.

Differences in image quality

Recorded images are compressed in JPEG format before being stored in memory. The memory capacity allotted to each image varies depending on the selected image quality and image size. Details are shown in the table below. (You can select 1360 × 1020 or 640 × 480 image size in the menu settings.)

1360 × 1020 image size

Image quality	Memory capacity
SUPER FINE	About 900 KB
FINE	About 450 KB
STANDARD	About 300 KB

640 × 480 image size

Image quality	Memory capacity
SUPER FINE	About 190 KB
FINE	About 100 KB
STANDARD	About 60 KB

Image quality indicator

The image quality indicator is not displayed during playback.

When you select image quality

The number of images you can shoot in the currently selected image quality appears on the screen.

Selecting the image size

You can select either of two image sizes

Still images: 1360 × 1020 or 640 × 480. (When the POWER switch is set to CAMERA or VCR, the image size is automatically set to 640 × 480.)
The default setting is 1360 × 1020.

Moving pictures: 320 × 240 or 160 × 112
The default setting is 320 × 240.

(1) Set the POWER switch to MEMORY / NETWORK (DCR-TRV50 only). Make sure that the LOCK switch is set to the left (unlock) position.

(2) Press MENU, then turn the SEL / PUSH EXEC dial to select STILL SET (still image) or MOVIE SET (moving picture) in , then press the dial (p. 203).

(3) Turn the SEL / PUSH EXEC dial to select IMAGESIZE, then press the dial.

(4) Turn the SEL / PUSH EXEC dial to select the desired image size, then press the dial.
The indicator changes as follows:

Still images: 1360 ↔ 640

Moving pictures: 320 ↔ 160

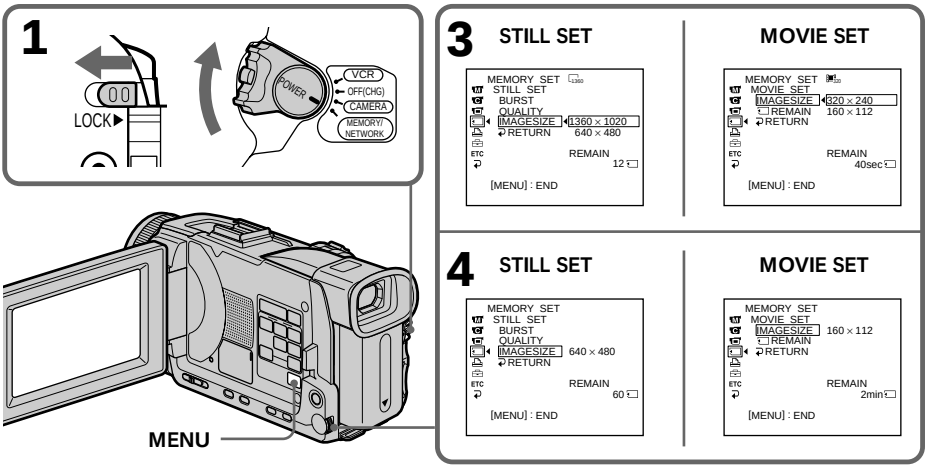

Image size settings

Setting	Meaning	Indicator
1360 × 1020	Records 1360 × 1020 still images.	1360
640 × 480	Records 640 × 480 still images.	640
320 × 240	Records 320 × 240 moving pictures.	320
160 × 112	Records 160 × 112 moving pictures.	160

Approximate number of still images you can record on a "Memory Stick"

The number of images you can record varies depending on which image quality and image size you select and the complexity of the subject.

Image quality	Image size	Type of "Memory Stick"s				
		8MB (supplied)	16MB (optional)	32MB (optional)	64MB (optional)	128MB (optional)
SUPER FINE	1360 × 1020	8 images	17 images	35 images	71 images	140 images
	640 × 480	40 images	80 images	160 images	325 images	650 images
FINE	1360 × 1020	17 images	34 images	69 images	140 images	280 images
	640 × 480	80 images	160 images	325 images	650 images	1310 images
STANDARD	1360 × 1020	25 images	50 images	100 images	205 images	415 images
	640 × 480	120 images	240 images	485 images	980 images	1970 images

Approximate time of moving pictures you can record on a "Memory Stick"

The time of moving pictures you can record varies depending on which image size you select and the complexity of the subject.

Image size	Type of "Memory Stick"s				
	8MB (supplied)	16MB (optional)	32MB (optional)	64MB (optional)	128MB (optional)
320 × 240	1 min. 20 sec.	2 min. 40 sec.	5 min. 20 sec.	10 min. 40 sec.	21 min. 20 sec.
160 × 112	5 min. 20 sec.	10 min. 40 sec.	21 min. 20 sec.	42 min. 40 sec.	85 min. 20 sec.

The table above shows approximate number and times of still images and moving pictures you can record on a "Memory Stick" formatted by your camcorder.

Note

When still images recorded on your camcorder in 1360 × 1020 size are played back on other equipment that does not support 1360 × 1020 size, the full image may not appear.

Recording still images on “Memory Stick”s – Memory Photo recording

You can record still images on “Memory Stick”s.

Before operation
Insert a “Memory Stick” into your camcorder.

(1) Set the POWER switch to MEMORY / NETWORK (DCR-TRV50 only). Make sure that the LOCK switch is set to the left (unlock) position.
(2) Press PHOTO lightly. The green ● mark stops flashing, then lights up. The brightness of the image and focus are adjusted, being targeted for the middle of the image and are fixed. Recording does not start yet.
(3) Press PHOTO deeper.
The still image will be displayed after the shutter sounds.
Recording is complete when the bar scroll indicator disappears.
The image when you pressed PHOTO deeper will be recorded on the “Memory Stick.”

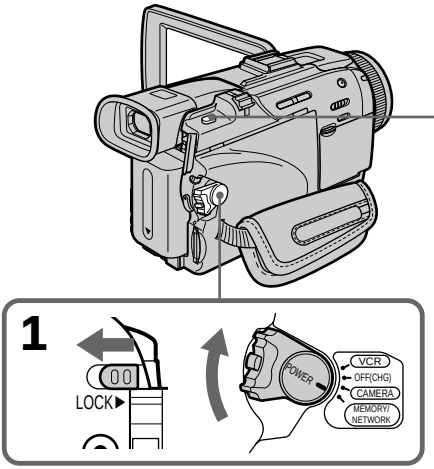

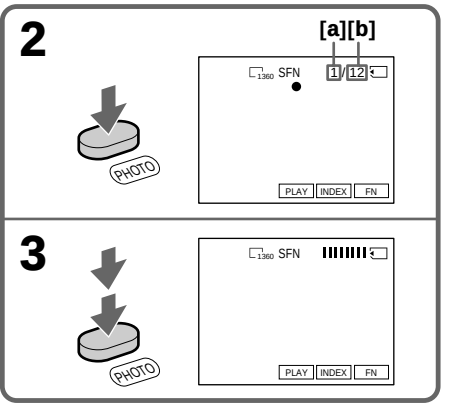

[a]: Number of recorded images
[b]: Approximate number of images that can be recorded on the “Memory Stick”

You can record still images on “Memory Stick”s in the tape recording or tape recording standby

For the details, see page 47.

When the POWER switch is set to MEMORY/NETWORK (DCR-TRV50 only)

The following functions do not work:
– Wide mode
– Digital zoom
– SteadyShot
– Super NightShot
– Color Slow Shutter
– Fader
– Picture effect
– Digital effect
– Title
– Sports lesson of PROGRAM AE (The indicator flashes.)

While you are recording a still image

You can neither turn off the power nor press PHOTO.

When you press PHOTO on the Remote Commander

Your camcorder immediately records the image that is on the screen when you press the button.

When you press PHOTO lightly in step 2

The image momentarily flickers. This is not a malfunction.

Recording data

The recording data (date / time or various settings when recorded) are not displayed while recording. However, they are recorded automatically onto the "Memory Stick." To display the recording data, press DATA CODE during playback. You can also use the Remote Commander for this opration (p. 42).

When the POWER switch is set to MEMORY/NETWORK (DCR-TRV50 only)

The angle of view is slightly larger compared with the angle of view when the POWER switch is set to CAMERA.

Recording images continuously

You can record still images continuously. Before recording, select one of the four modes described below in the menu settings.

NORMAL [a]
Your camcorder shoots up to three still images in 1360 × 1020 size or nine still images in 640 × 480 size at about 0.5 sec intervals. ( )

HIGH SPEED [a]
Your camcorder shoots up to 16 still images in 640 × 480 size at about 0.07 sec intervals. ( )

EXP BRKTG (Exposure Bracketing)
Your camcorder automatically shoots three images at about 0.5 sec intervals at different exposures. (BRK)

MULTI SCRN (Multi Screen) [b]
Your camcorder shoots nine still images at about 0.4 sec intervals and displays the images on a single page divided into nine boxes. Still images are recorded in 640 × 480 size. ( )

[a]

[b]

(1) Set the POWER switch to MEMORY / NETWORK (DCR-TRV50 only). Make sure that the LOCK switch is set to the left (unlock) position.
(2) Press MENU, then turn the SEL / PUSH EXEC dial to select STILL SET in ▭, then press the dial (p. 203).
(3) Turn the SEL / PUSH EXEC dial to select BURST, then press the dial.
(4) Turn the SEL / PUSH EXEC dial to select the desired setting, then press the dial.
(5) Press MENU to make the menu setting disappear.
(6) Press PHOTO deeper.

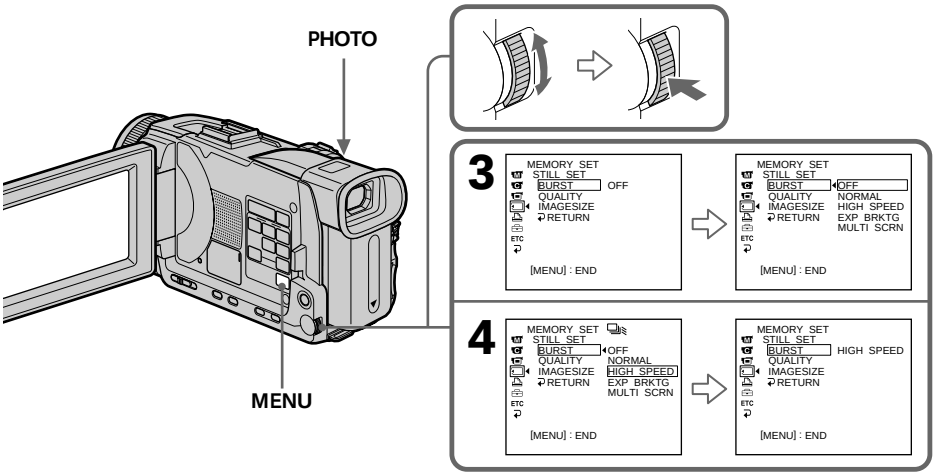

If the capacity of the "Memory Stick" becomes full

"FULL" appears on the screen, and you cannot record a still image on this "Memory Stick."

The number of still images in continuous shooting

The number of still images you can shoot continuously varies depending on the image size and the capacity of the "Memory Stick."

During recording still images continuously

The flash does not work.

When shooting with the self-timer or the Remote Commander

Your camcorder automatically records up to the maximum recordable number of still images.

When selecting NORMAL or HIGH SPEED
Recording continues up to the maximum number of still images during pressing PHOTO deeper. Release PHOTO to stop recording.

When selecting HIGH SPEED
Flickering or changes in color may occur. Also, your camcorder prevents focusing on near objects.

If there is space remaining on the "Memory Stick" for less than three photos
You cannot carry out the exposure bracketing (EXP BRKTG). "FULL" is displayed when you press PHOTO.

The effect of exposure bracketing (EXP BRKTG)
The effect may not appear clearly on the LCD screen.
Checking images on a TV monitor or computer display for the expected effect is recommended.

Recording images with the flash

The flash automatically pops up to strobe. The default setting is auto (no indicator). To change the flash mode, press ϟ (flash) repeatedly until the flash mode indicator appears on the screen.

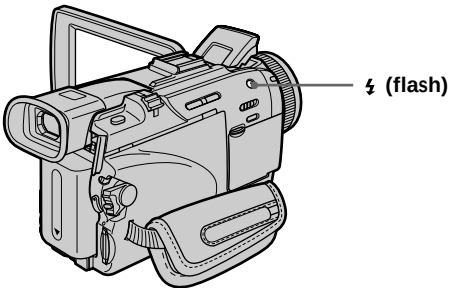

Each press of ϟ (flash) changes the indicator as follows:

→ ϟ → → No indicator

Auto red-eye reduction:	The flash fires before recording to reduce the red-eye phenomenon.
ϟ Forced flash:	The flash fires regardless of the surrounding brightness.
No flash:	The flash does not fire.

The flash is automatically adjusted to the appropriate brightness. You can also change FLASH LVL to the desired brightness in the menu settings (p. 200). Try recording various images to find the most appropriate setting for FLASH LVL.

Notes

- The recommended shooting distance using the built-in flash is 0.3 m to 2.5 m (31/32 feet to 8 1/3 feet).
- Attaching the lens hood (supplied) or a conversion lens (optional) may block the light from the flash or cause lens shadow to appear.
- You cannot use an external flash (optional) and the built-in flash at the same time.
- 👁 (auto red-eye reduction) may not produce the desired effect depending on individual differences, the distance to the subject, the subject not looking at the pre-recording flash or other conditions.
- The flash effect cannot be obtained easily when you use forced flash in a bright location.
- If it is not easy to focus on a subject automatically, for example, when recording in the dark, use HOLOGRAM AF (p. 132) or the focal distance information (p. 70) for focusing manually.

If you leave your camcorder for five or more minutes after disconnecting the power supply

Your camcorder returns to the default setting (auto).

The flash does not fire even if you select auto and 👁 (auto red-eye reduction) during the following operations:

– NightShot
– Exposure
– Flexible Spot meter
– Spotlight of PROGRAM AE
– Sunset & moon of PROGRAM AE
– Landscape of PROGRAM AE

When you use an external flash (optional) which does not have the auto red-eye reduction

You cannot select the auto red-eye reduction.

During recording images continuously

The flash does not work.

Shooting with an auxiliary light – HOLOGRAM AF

The HOLOGRAM AF is an auxiliary light source used for focusing on subjects in dark places.
Set HOLOGRAM F in to AUTO in the menu settings. (The default setting is AUTO.)
When ON appears on the screen in a dark place, press PHOTO lightly. Then the auxiliary light will automatically emit until the subject is focused.

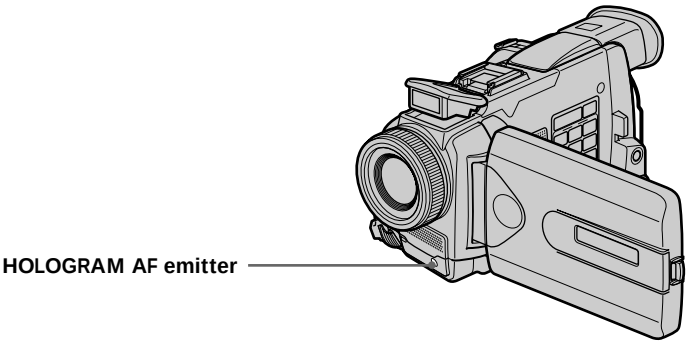

About HOLOGRAM AF

"HOLOGRAM AF (Auto-Focus)," an application of laser holograms, is a new AF optical system that enables still image shooting in dark places. Having gentler radiation than conventional high-brightness LEDs or lamps, the system satisfies Laser Class 1 (*) specification and thus maintains higher safety for human eyes.
No safety problems will be caused by directly looking into the HOLOGRAM AF emitter at a close range. However, it is not recommended to do so, because you may experience such effects like several minutes of image residual and dazzling, that you encounter after looking into a flashlight.

* HOLOGRAM AF satisfies Class 1(time base 30 000 seconds), specified in all of JIS (Japan), IEC(EU), and FDA(US) industry standards.
  Complying with these standards identifies the laser product to be safe, under a condition that a human looks at the laser light either directly or even through a lens for 30 000 seconds.

Notes

- A conversion lens (optional) may obstruct the HOLOGRAM AF light and make focusing difficult.
- If enough light does not reach the subject even if the HOLOGRAM AF emitter is emitted (recommended shooting distance is 2.5 m (8 1/3 feet)), the subject will not be focused.
- Focusing may be hampered if the light emitted from the HOLOGRAM AF is blocked by an obstruction.
- Focus is achieved as long as HOLOGRAM AF light reaches to the subject even if its light is slightly out of the middle position of the subject.
- If HOLOGRAM AF light is dim, it sometimes becomes difficult to focus. If this happens, wipe the HOLOGRAM AF emitter with a soft, dry cloth.

The HOLOGRAM AF does not emit when:

– Flash is set to ⚡ No flash
– NightShot is set to ON
– Focusing manually
– Using Spot Focus
– Sunset & moon of PROGRAM AE
– Landscape of PROGRAM AE
– Continuous photo recording

When you use the external flash (optional)

HOLOGRAM AF emits.

Self-timer memory photo recording

You can record images on "Memory Stick"s with the self-timer. You can also use the Remote Commander for this operation.

(1) Set the POWER switch to MEMORY / NETWORK (DCR-TRV50 only). Make sure that the LOCK switch is set to the left (unlock) position.
(2) Press FN to display PAGE1.
(3) Press SELFTIMER.
The ⏲ (self-timer) indicator appears on the screen.
(4) Press PHOTO deeper.
Self-timer starts counting down from 10 with a beep. In the last two seconds of the countdown, the beep gets faster, then recording starts automatically.

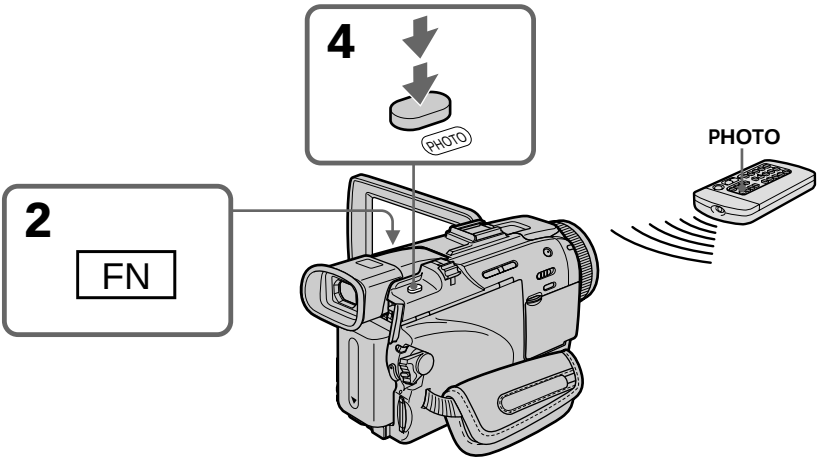

To cancel the self-timer

Press SELFTIMER so that the ⏲ (self-timer) indicator disappears on the screen. You cannot cancel self-timer using the Remote Commander.

Note

The self-timer recording is automatically canceled when:
– Self-timer recording is finished.
– The POWER switch is set to OFF (CHG) or VCR.

Recording images from a tape as still images

Your camcorder can read moving picture data recorded on a tape and record it as a still image on a "Memory Stick." Your camcorder can also capture moving picture data through the input connector and record it as a still image on a "Memory Stick."

Before operation

- Insert a recorded tape into your camcorder.
- Insert a "Memory Stick" into your camcorder.

(1) Set the POWER switch to VCR.
(2) Press ►. Moving pictures recorded on the tape are played back.
(3) Press PHOTO lightly until picture you want to capture from the tape freezes and CAPTURE appears on the screen. Recording does not start yet.
To change from the image selected to another image, release PHOTO once and press it lightly again.
(4) Press PHOTO deeper. The image displayed on the screen will be recorded on the "Memory Stick." Recording is complete when the bar scroll indicator disappears.

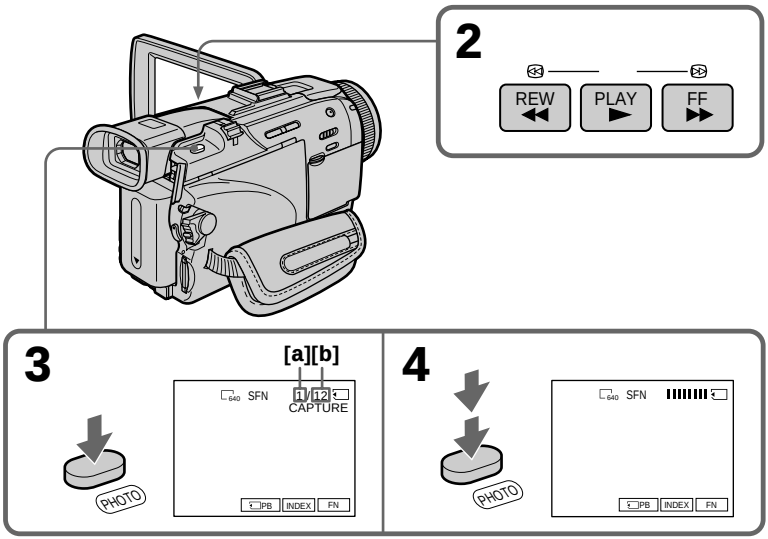

[a]: Number of recorded images
[b]: Approximate number of images that can be recorded on the "Memory Stick"

Image size of still images
Image size is automatically set to 640 × 480.

When the access lamp is lit or flashing
Do not shake or strike the unit. Also, do not turn the power off , eject a “Memory Stick.” Otherwise, image data may become damaged.

If “ ” appears on the screen
The inserted “Memory Stick” is incompatible with your camcorder because its format does not conform with your camcorder. Check the format of the “Memory Stick.”

If you press PHOTO lightly in the playback
Your camcorder stops momentarily.

Sound recorded on a tape
You cannot record audio from a tape.

Titles already recorded on cassettes
You cannot record titles on “Memory Stick”s. Titles do not appear while you are recording a still image with PHOTO.

Recording date/time
The recording data (date/time) when it is recorded on a “Memory Stick” is recorded. Various settings are not recorded.
Data codes recorded on a tape cannot be recorded on a “Memory Stick”.

When you press PHOTO on the Remote Commander
Your camcorder immediately records the image that is on the screen when you press the button.

Recording a still image from external equipment

Before operation
Set DISPLAY in ETC to LCD in the menu settings. (The default setting is LCD.)

(1) Set the POWER switch to VCR.
(2) Play back the recorded tape, or turn the TV on to see the desired program. The image of the external equipment is displayed on the screen.
(3) Follow steps 3 and 4 on page 135.

Using the A/V connecting cable

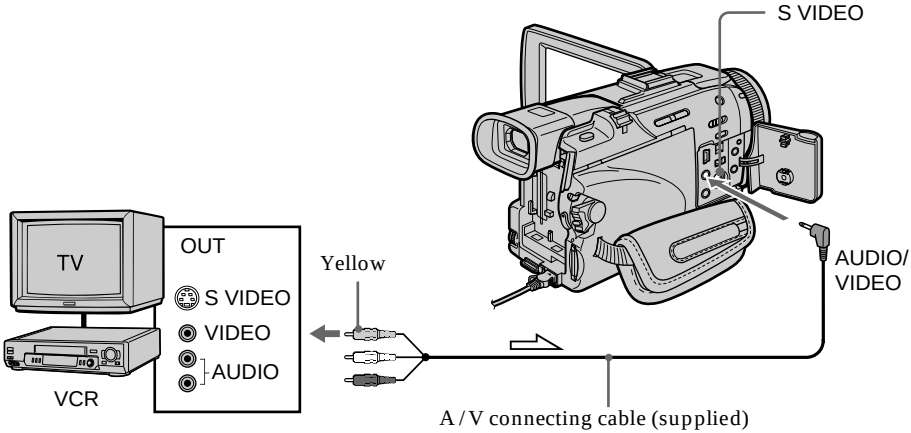

: Signal flow

Connect the yellow plug of the A / V connecting cable to the video jack on the VCR or the TV.

If your TV or VCR has an S video jack
Pictures can be reproduced more faithfully by using an S video cable (optional).
With this connection, you do not need to connect the yellow (video) plug of the A / V connecting cable.
Connect an S video cable (optional) to the S video jacks of both your camcorder and the TV or VCR.

Using the i.LINK cable (DV connecting cable)

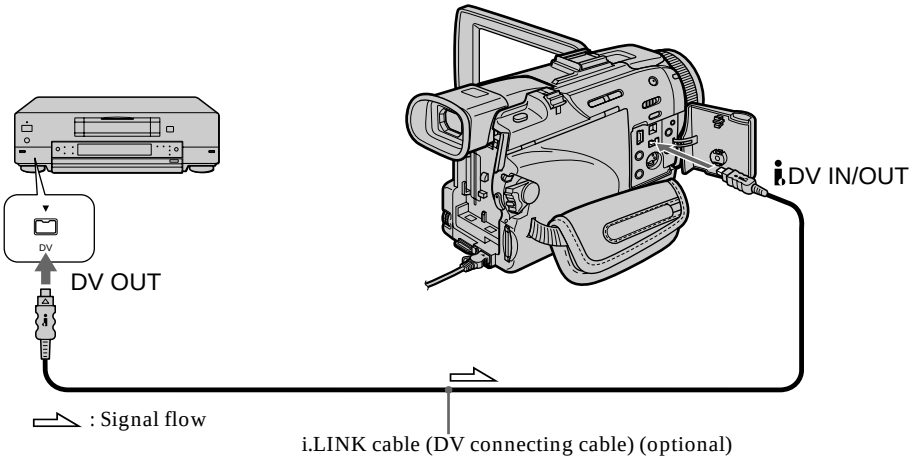

Note

In the following instances, recording is interrupted or "REC ERROR" is displayed, and recording is not possible. Record distortion-free images.

– When recording on a tape in a poor recording state, for example, on a tape that has been repeatedly used for dubbing
– When attempting to input images that are distorted due to poor radio wave reception when a TV tuner unit is in use

Superimposing a still image in the "Memory Stick" on an image – MEMORY MIX

You can superimpose a still image you have recorded on the "Memory Stick" on the moving picture you are recording. You can record the superimposed images on a tape or a "Memory Stick." (However, you can record only superimposed still images on the "Memory Stick.")

M. CHROM (memory chroma key)
You can swap a blue area of a still image such as an illustration or a frame with a moving picture.

M. LUMI (memory luminance key)
You can swap a brighter area of a still image such as a handwritten illustration or title with a moving picture. Record a title on the "Memory Stick" before a trip or event for convenience.

C. CHROM (camera chroma key)
You can superimpose a moving picture on a still image such as an image that can be used as background. Shoot the subject against a blue background. The blue area of the moving picture will be swapped with a still image.

M. OVERLAP* (memory overlap)
You can make a moving picture fade in on top of a still image recorded on the "Memory Stick" as the overlap.

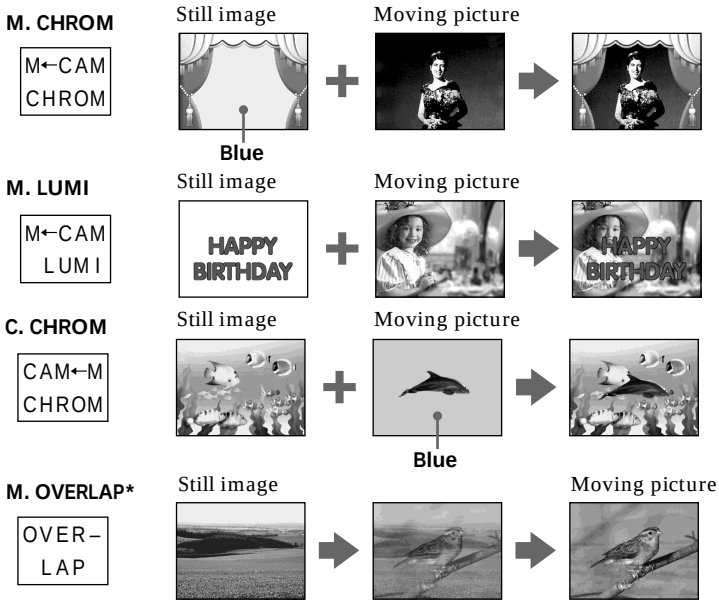

* The superimposed image using Memory overlap can be recorded on tapes only.

Recording superimposed images on a tape

Before operation

- Insert a tape for recording into your camcorder.
- Insert a "Memory Stick" recorded still images into your camcorder.

(1) Set the POWER switch to CAMERA.
(2) Press FN to display PAGE1.
(3) Press MEM MIX. The last recorded or last composed image appears on the lower part of the screen as a thumbnail image.
(4) Press –/+ on the right lower corner of the screen to select the still image which you want to superimpose.
–: To see the previous image
+: To see the next image
(5) Press a desired mode. The still image is superimposed on the moving picture.
(6) Press –/+ on the left lower corner of the screen to adjust the effect, then press ↩ OK to return to PAGE1.

M. CHROM:	Blue chroma key (only blue background portion) to extract a still image and superimpose it on a moving image
M. LUMI:	Brightness level used when extracting a still image and superimposing it on a moving image
C. CHROM:	Blue chroma key (only blue background portion) to extract a moving picture and superimpose it on a still image
M. OVERLAP:	No adjustment necessary

The fewer bars there are on the screen, the stronger the effect.

(7) Press EXIT to return to FN.
(8) Press START/STOP to start recording.

Superimposing a still image in the "Memory Stick" on an image – MEMORY MIX

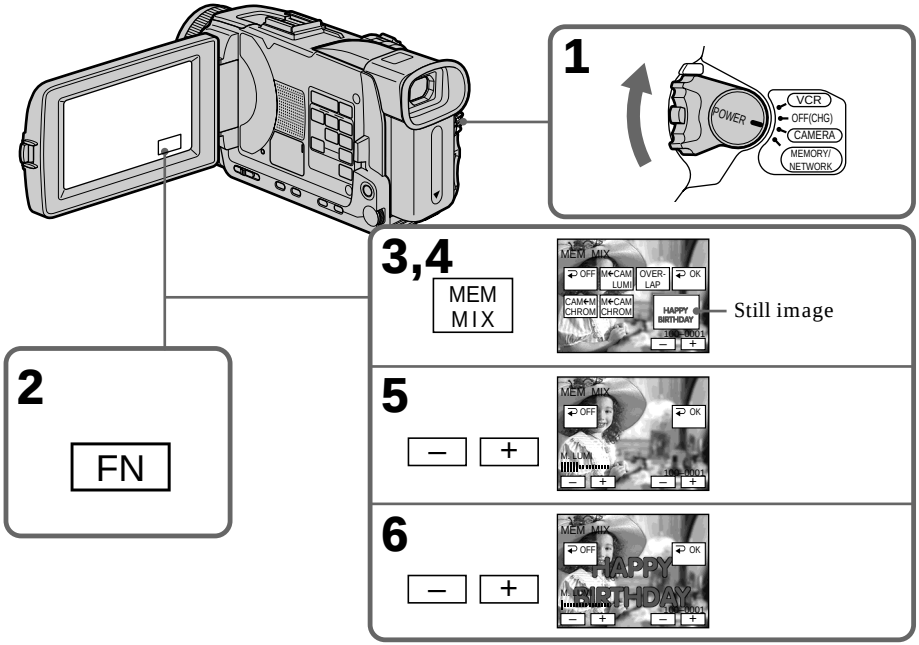

To change the still image to be superimposed

Press –/+ on the right lower corner before step 6.

To cancel MEMORY MIX

Press ↩ OFF to return to PAGE1.

Notes

- You cannot use the MEMORY MIX for moving pictures recorded on "Memory Stick"s.
- When the overlapping still image has a large amount of white, the thumbnail image of the picture may not be clear.

Image data modified on your computer or shot with other equipment

You may not be able to play back modified images with your camcorder.

When you select M. OVERLAP

You cannot change the still image or the mode setting.

During recording

You cannot change the mode setting.

To record the superimposed image as a still image

Press PHOTO deeper in step 8 (You should set PHOTO REC in to TAPE in the menu settings beforehand).

Recording superimposed images on a "Memory Stick" as a still image

Before operation
Insert a "Memory Stick" recorded still images into your camcorder.

(1) Set the POWER switch to MEMORY / NETWORK (DCR-TRV50 only). Make sure that the LOCK switch is set to the left (unlock) position.
(2) Press FN and select PAGE2.
(3) Press MEM MIX. The last recorded or last composed image appears on the lower part of the screen as a thumbnail image.
(4) Press –/+ on the right lower corner of the screen to select the still image which you want to superimpose.
–: To see the previous image
+: To see the next image
(5) Press a desired mode. The still image is superimposed on the moving picture.
(6) Press –/+ on the left lower corner of the screen to adjust the effect, then press ↩ OK to return to PAGE2.

M. CHROM:	Blue chroma key (only blue background portion) to extract a still image and superimpose it on a moving image
M. LUMI:	Brightness level used when extracting a still image and superimposing it on a moving image
C. CHROM:	Blue chroma key (only blue background portion) to extract a moving picture and superimpose it on a still image

The fewer bars there are on the screen, the stronger the effect.

(7) Press EXIT to return to FN.
(8) Press PHOTO deeper to start recording.
The image displayed on the screen will be recorded on a "Memory Stick."
Recording is complete when the bar scroll indicator disappears.

Superimposing a still image in the "Memory Stick" on an image – MEMORY MIX

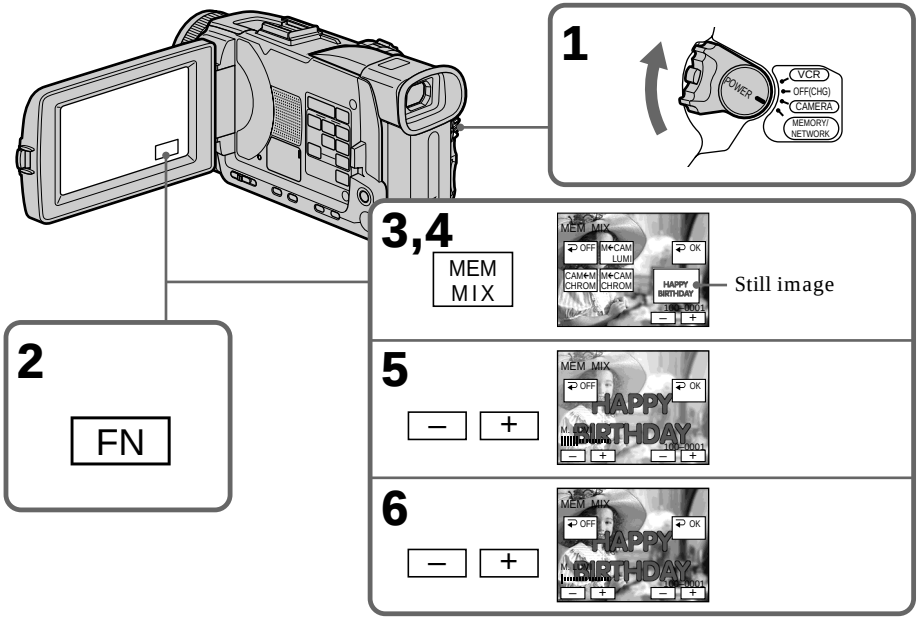

To change the still image to be superimposed

Press –/+ on the right lower corner before step 6.

To cancel MEMORY MIX

Press ↩ OFF to return to PAGE2.

Notes

- You cannot use MEMORY MIX for moving pictures recorded on "Memory Stick"s.
- When the overlapping still image has a large amount of white, the thumbnail image of the picture may not be clear.

Image size of still pictures

Image size is automatically set to 640 × 480.

Image data modified with your computers or shot with other equipment

You may not be able to play back modified images with your camcorder.

During recording

You cannot change the mode setting.

When recording images on a "Memory Stick" using the MEMORY MIX

The PROGRAM AE does not work. (The indicator flashes.)

The "Memory Stick" supplied with your camcorder stores 20 images

– For M. CHROM: 18 images (such as a frame) 100-0001~100-0018
– For C. CHROM: two images (such as a background) 100-0019~100-0020

Sample images

Sample images stored in the "Memory Stick" supplied with your camcorder are protected (p. 167).

Recording moving pictures on “Memory Stick”s – MPEG movie recording

You can record moving pictures with sound on “Memory Stick”s.
The picture and sound and recorded up to the capacity of “Memory Stick” (MPEG MOVIE EX).

Before operation
Insert a “Memory Stick” into your camcorder.

(1) Set the POWER switch to MEMORY / NETWORK (DCR-TRV50 only). Make sure that the LOCK switch is set to the left (unlock) position.
(2) Press START / STOP. Your camcorder starts recording. The camera recording lamp located on the front of your camcorder lights up. The picture and sound are recorded up to the remaining capacity of “Memory Stick”. For more information about recording time, see page 125.

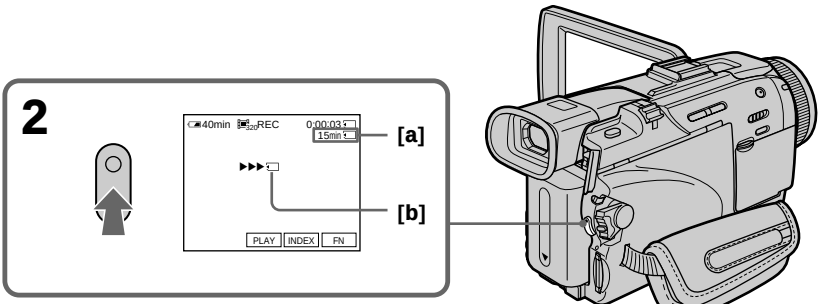

[a]: Recording time that can be recorded on the “Memory Stick”.
[a] [b]: These indicators are displayed for five seconds after pressing START / STOP. This indicator is not recorded.

To stop recording

Press START / STOP.

Note
Sound is recorded in monaural.

When the POWER switch is set to MEMORY/NETWORK (DCR-TRV50 only)
The following functions do not work:
– Wide mode
– Digital zoom
– SteadyShot
– Super NightShot
– Color Slow Shutter
– Fader
– Picture effect
– Digital effect
– Title
– Sports lesson of PROGRAM AE (The indicator flashes.)

When using an external flash (optional)
Turn the power of the external flash off when recording moving pictures on "Memory Stick"s. Otherwise, the charging sound for the flash may be recorded.

Recording date/time
The date/time are not displayed while recording. However, they are automatically recorded onto the "Memory Stick."
To display the recording date/time, press DATA CODE during playback. You can also use the Remote Commander for this operation (p. 42). Various settings cannot be recorded.

During recording on "Memory Stick"
Do not eject the cassette tape from your camcorder. During ejecting the tape, sound is recorded on the "Memory Stick."

When the POWER switch is set to MEMORY/NETWORK (DCR-TRV50 only)
The angle of view is slightly larger compared with the angle of view when the POWER switch is set to CAMERA.

Self-timer MPEG movie recording

You can record moving pictures on "Memory Stick"s with the self-timer. You can also use the Remote Commander for this operation.

(1) Set the POWER switch to MEMORY / NETWORK (DCR-TRV50 only). Make sure that the LOCK switch is set to the left (unlock) position.
(2) Press FN to display PAGE1.
(3) Press SELFTIMER.
The ⏲ (self-timer) indicator appears on the screen.
(4) Press START / STOP.
Self-timer starts counting down from 10 with a beep. In the last two seconds of the countdown, the beep gets faster, then recording starts automatically.

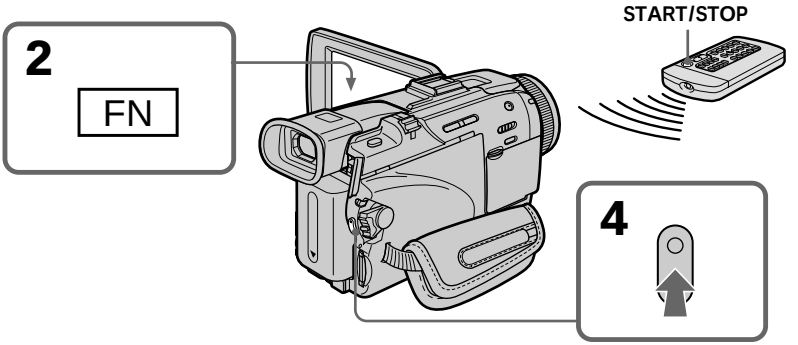

To stop the countdown

Press START / STOP. To restart the self-timer, press START / STOP again.

To cancel the self-timer

Press SELFTIMER so that the ⏲ (self-timer) indicator disappears on the screen. You cannot cancel self-timer using the Remote Commander.

Note

The self-timer recording is automatically canceled when:
– Self-timer recording is finished.
– The POWER switch is set to OFF (CHG) or VCR.

Recording pictures from tape as a moving picture

Your camcorder can read moving picture data recorded on a tape and record it as a moving picture on a "Memory Stick." Your camcorder can also capture moving picture data through the input connector and record it as a moving picture on a "Memory Stick."

Before operation

- Insert a recorded tape into your camcorder.
- Insert a "Memory Stick" into your camcorder.

(1) Set the POWER switch to VCR.

(2) Press ►. The picture recorded on the tape is played back.
And press ❚❚ at the scene where you want to start recording from.

(3) Press START/STOP on your camcorder. The picture and sound are recorded up to the remaining capacity of the "Memory Stick". For more information about recording time, see page 125.

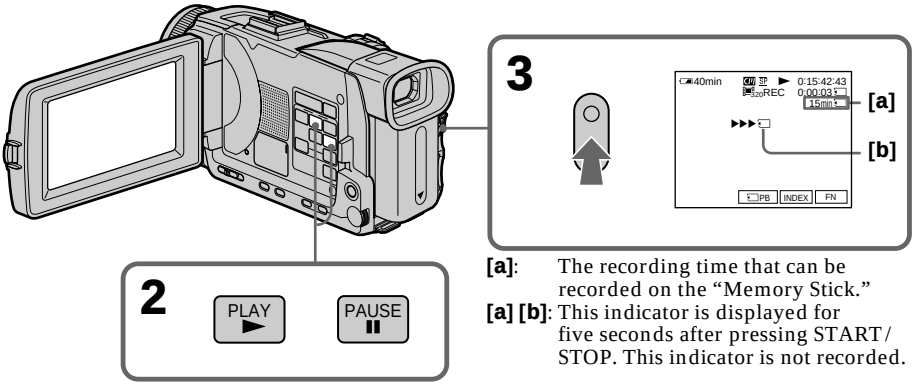

[a]: The recording time that can be recorded on the "Memory Stick."

[a] [b]: This indicator is displayed for five seconds after pressing START/STOP. This indicator is not recorded.

To stop recording

Press START/STOP.

Notes

- Sound recorded in 48 kHz is converted to 32 kHz sound when recording images from a tape to “Memory Stick”s.
- Sound recorded in stereo is converted to monaural sound when recording from tape.

When the access lamp is lit or flashing

Do not shake or knock the unit. Also, do not turn the power off , eject a “Memory Stick”. Otherwise, image data may become damaged.

Titles already recorded on cassettes

You cannot record titles on “Memory Stick”s. Titles do not appear while you are recording moving picture with START/STOP.

If “ AUDIO ERROR” is displayed

Sound that cannot be recorded by your camcorder has been recorded. Connect the A/V connecting cable to input images from external equipment used to play back the image (p. 149).

Recording date/time

The recording data (date/time) when it is recorded on “Memory Stick” is recorded. Various settings are not recorded.
Data codes recorded on a tape cannot be recorded on a “Memory Stick”.

Recording a moving picture from external equipment

Before operation
Set DISPLAY in ETC to LCD in the menu settings. (The default setting is LCD.)

(1) Set the POWER switch to VCR.
(2) Play back the recorded tape, or turn the TV on to see the desired program. The image of the other equipment is displayed on the screen.
(3) Follow the procedure on page 147 from the step 3 onwards at the point where you want to start recording from.

Using the A/V connecting cable

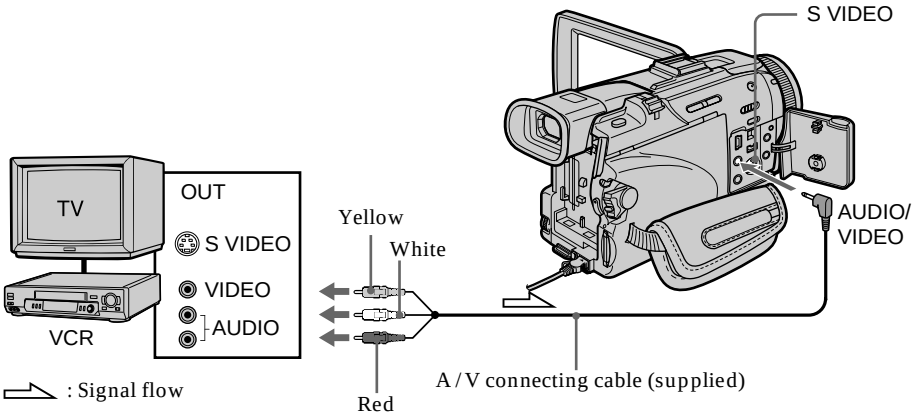

If your TV or VCR has an S video jack
Pictures can be reproduced more faithfully by using an S video cable (optional).
With this connection, you do not need to connect the yellow (video) plug of the A / V connecting cable.
Connect an S video cable (optional) to the S video jacks of both your camcorder and the TV or VCR.

Using the i.LINK cable (DV connecting cable)

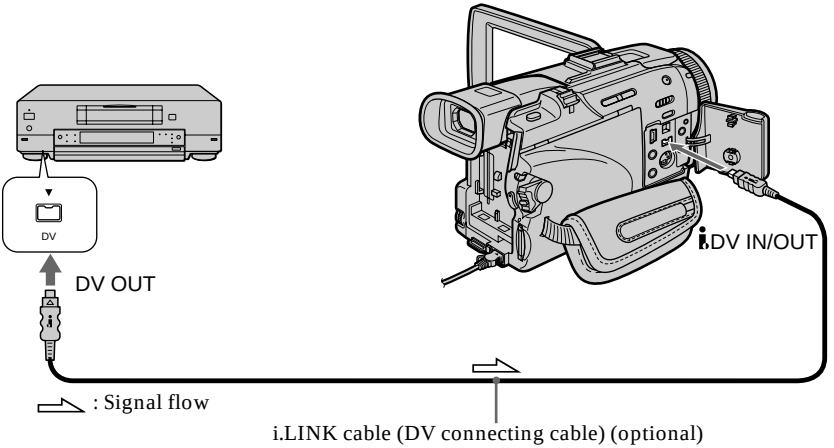

Note

In the following instances, "REC ERROR" is displayed and you cannot record pictures.

– When recording on a tape in a poor recording state, for example, on a tape that has been repeatedly used for dubbing
– When attempting to input images that are distorted due to poor radio wave reception when a TV tuner unit is in use
– When the input signal is cut off

During recording on "Memory Stick"

Do not eject the cassette tape from your camcorder.