SONY

3-075-494-**11** (1)

Digital Video Camera Recorder

Mini DV Digital Video Cassette

Operating Instructions

Before operating the unit, please read this manual thoroughly, and retain it for future reference.

Owner's Record

The model and serial numbers are located on the bottom. Record the serial number in the space provided below. Refer to these numbers whenever you call upon your Sony dealer regarding this product.

Model No. **DCR-TRV** _____ Model No. **AC-** _____

Serial No. _____ Serial No. _____

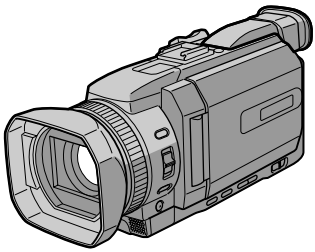

DCR-TRV950

Digital Handycam

Network Handycam

InfoLITHIUM™ M SERIES

Cassette Memory

MEMORY STICK™

Bluetooth™

DCR-TRV940/TRV950

©2002 Sony Corporation

Welcome!

Congratulations on your purchase of this Sony Handycam. With your Handycam, you can capture life's precious moments with superior picture and sound quality. Your Handycam is loaded with advanced features, but at the same time it is very easy to use. You will soon be producing home video that you can enjoy for years to come.

WARNING

To prevent fire or shock hazard, do not expose the unit to rain or moisture.

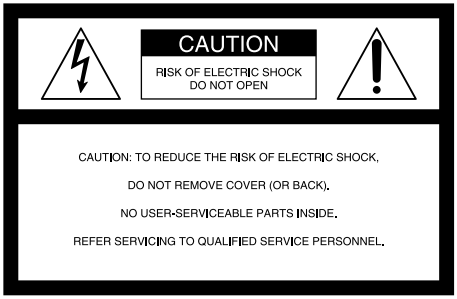

This symbol is intended to alert the user to the presence of uninsulated "dangerous voltage" within the product's enclosure that may be of sufficient magnitude to constitute a risk of electric shock to persons.

This symbol is intended to alert the user to the presence of important operating and maintenance (servicing) instructions in the literature accompanying the appliance.

CAUTION

The use of optical instruments with this product will increase eye hazard. As the laser beam used in this Handycam is harmful to eyes, do not attempt to disassemble the cabinet.
Refer to servicing to qualified personnel only.

NOTICE

If static electricity or electromagnetism causes data transfer to discontinue midway (fail), restart the application or disconnect and connect the USB cable again.

For customers in the U.S.A. and CANADA

CAUTION

TO PREVENT ELECTRIC SHOCK, MATCH WIDE BLADE OF PLUG TO WIDE SLOT, FULLY INSERT.

RECYCLING LITHIUM-ION BATTERIES

Lithium-Ion batteries are recyclable.
You can help preserve our environment by returning your used rechargeable batteries to the collection and recycling location nearest you.

For more information regarding recycling of rechargeable batteries, call toll free 1-800-822-8837, or visit http://www.rbrc.org/.

Caution: Do not handle damaged or leaking Lithium-Ion batteries.

DCR-TRV950 only

Countries and areas where you can use network functions are restricted.
For details, refer to the separate Network Operating Instructions.

For customers in the U.S.A.

If you have any questions about this product, you may call:
Sony Customer Information Center 1-800-222-SONY (7669)
The number below is for the FCC related matters only.

Regulatory Information

Declaration of Conformity

Trade Name:	SONY
Model No.:	DCR-TRV950
Responsible Party:	Sony Electronics Inc.
Address:	680 Kinderkamack Road, Oradell, NJ07649 U.S.A.
Telephone No.:	201-930-6972

This device complies with Part 15 of the FCC Rules. Operation is subject to the following two conditions: (1) This device may not cause harmful interference, and (2)this device must accept any interference received, including interference that may cause undesired operation.

"Memory Stick"

This device complies with Part 15 of the FCC Rules. Operation is subject to the following two conditions: (1) This device may not cause harmful interference, and (2) this device must accept any interference received, including interference that may cause undesired operation.

CAUTION

You are cautioned that any changes or modifications not expressly approved in this manual could void your authority to operate this equipment.

DCR-TRV950 only

IMPORTANT NOTE

To comply with FCC RF exposure compliance requirements, the following antenna installation and device operating configurations must be satisfied: the antenna has been installed by the manufacturer and no changes can be made.

Note:

This equipment has been tested and found to comply with the limits for a Class B digital device, pursuant to Part 15 of the FCC Rules. These limits are designed to provide reasonable protection against harmful interference in a residential installation. This equipment generates, uses, and can radiate radio frequency energy and, if not installed and used in accordance with the instructions, may cause harmful interference to radio communications. However, there is no guarantee that interference will not occur in a particular installation. If this equipment does cause harmful interference to radio or television reception, which can be determined by turning the equipment off and on, the user is encouraged to try to correct the interference by one or more of the following measures:

— Reorient or relocate the receiving antenna.
— Increase the separation between the equipment and receiver.
— Connect the equipment into an outlet on a circuit different from that to which the receiver is connected.
— Consult the dealer or an experienced radio/TV technician for help.

For customers in CANADA

"Memory Stick"

This Class B digital apparatus complies with Canadian ICES-003.

DCR-TRV950 only

The term "IC:" before the radio certification number only signifies that Industry Canada technical specifications were met.

- Recording moving pictures on a tape (p. 26)
- Recording still images on a tape (p. 51)
- Playing back a tape (p. 39)
- Recording still images on a "Memory Stick" (p. 46, 135)
- Recording moving pictures on a "Memory Stick" (p. 153)
- Viewing still images recorded on a "Memory Stick" (p. 165)
- Viewing moving pictures on a "Memory Stick" (p. 168)

- Viewing images recorded on a "Memory Stick" using the USB cable (p. 199, 203)
- Viewing moving pictures recorded on tapes using the USB cable (p. 194)
- Capturing images on your computer from your camcorder using the USB cable (p. 196)
- Converting an analog signal to digital to capture images onto your computer (p. 204)

Accessing the Internet, sending/receiving your e-mail. For details, refer to the Network Function Operating Instructions supplied with your camcorder. (DCR-TRV950 only) (p. 205)

Other uses

Functions for adjusting the exposure in the recording mode

- BACK LIGHT (p. 34)
- SPOT LIGHT (p. 35)
- Recording images with the flash (p. 48, 139)
- PROGRAM AE (p. 67)
- Adjusting the exposure manually (p. 74)
- Flexible Spot Meter (p. 75)

Functions for giving images more impact

- Digital zoom (p. 31)
  The default setting is **OFF**. (To zoom greater than 12×, select the digital zoom power in **D ZOOM** in the menu settings.)
- Fader (p. 55)
- Picture effect (p. 58)
- Digital effect (p. 59)
- Titles (p. 119)
- MEMORY MIX (p. 148)

Functions for giving a natural appearance to your recordings

- Sports lesson (p. 67)
- Landscape (p. 67)
- Manual focus (p. 76)
- Spot Focus (p. 78)

Functions for use with recorded tapes

- END SEARCH/EDITSEARCH/Rec Review (p. 37)
- DATA CODE (p. 41)
- Tape PB ZOOM (p. 86)
- ZERO SET MEMORY (p. 88)
- TITLE SEARCH (p. 89)
- Digital program editing (p. 98, 160)

Table of contents

Main Features 4

Quick Start Guide

– Recording on a tape 8
– Recording on a "Memory Stick" 10

Getting Started

Using this manual 12
Checking supplied accessories 14
Step 1 Preparing the power supply ... 15
Installing the battery pack 15
Charging the battery pack 16
Connecting to a wall outlet 19
Step 2 Setting the date and time 20
Step 3 Inserting a cassette 23
Step 4 Using the touch panel 24

Recording – Basics

Recording a picture 26
Shooting backlit subjects – BACK LIGHT 34
Shooting subjects lit by strong light – SPOT LIGHT 35
Self-timer recording 36
Checking recordings – END SEARCH / EDITSEARCH / Rec Review 37

Playback – Basics

Playing back a tape 39
To display the screen indicators – Display function 41
Viewing the recording on TV 45

Advanced Recording Operations

Recording still images on a "Memory Stick" during tape recording 46
Recording still images on a tape – Tape Photo recording 51
Using the wide mode 53
Using the fader 55
Using special effects – Picture effect 58
Using special effects – Digital effect 59
Presetting the adjustment for picture quality – Custom preset 62
Using the guide frame 64
Shooting with the zebra pattern 65
Using the color bar 66
Shooting with manual adjustment 67
Using the PROGRAM AE 67
Adjusting the shutter speed 70
Adjusting the white balance 72
Adjusting the exposure 74
Using the spot light-metering – Flexible Spot Meter 75
Focusing manually 76
Using the spot focus – Spot Focus 78
Adjusting recording level manually – Sound recording level 79
Interval recording 81
Frame by frame recording – Frame recording 83

Advanced Playback Operations

Playing back tapes with picture effect 84
Playing back tapes with digital effect 85
Enlarging images recorded on tapes – Tape PB ZOOM 86
Quickly locating a scene – ZERO SET MEMORY 88
Searching the boundaries of a recorded tape by title – TITLE SEARCH 89
Searching a recording by date – DATE SEARCH 90
Searching for a photo – PHOTO SEARCH/PHOTO SCAN 92

Editing

Dubbing a tape 95
Dubbing only desired scenes – Digital program editing (on tapes) 98
Recording video or TV programs 109
Inserting a scene from a VCR – Insert Editing 113
Audio dubbing 115
Superimposing a title 119
Making your own titles 122
Labeling a cassette 124

"Memory Stick" Operations

Using a "Memory Stick"
– Introduction 126
Recording still images on a "Memory Stick"
– Memory Photo recording 135
Recording images from a tape as still images 144
Superimposing a still image in the "Memory Stick" on an image
– MEMORY MIX 148
Recording moving pictures on a"Memory Stick"
– MPEG movie recording 153
Recording pictures from a tape as a moving picture 156
Recording edited pictures from a tape as a moving picture
– Digital program editing (on a "Memory Stick") 160
Copying still images from a tape
– PHOTO SAVE 163
Viewing still images
– Memory photo playback 165
Viewing moving pictures
– MPEG movie playback 168
Copying images recorded on a "Memory Stick" to a tape 171
Enlarging still images recorded on a "Memory Stick"
– Memory PB ZOOM 173
Playing back images in a continuous loop – SLIDE SHOW 175
Preventing accidental erasure
– Image protection 176
Deleting images – DELETE 177
Writing a print mark
– PRINT MARK 180
Using the optional printer 181

Viewing Images Using your Computer

Viewing images on your computer
– Introduction 183
Connecting your camcorder to your computer using the USB cable
– For Windows users 186
Viewing images recorded on a tape on your computer
– For Windows users 194
Viewing images recorded on a "Memory Stick" on your computer
– For Windows users 199
Connecting your camcorder to your computer using the USB cable
– For Macintosh users 201
Viewing images recorded on a "Memory Stick" on your computer
– For Macintosh users 203
Capturing images from an analog video unit on your computer
– Signal convert function 204

Using the Network function (DCR-TRV950 only)

Accessing the network 205
For the details, refer to the Network Function Operating Instructions supplied with your camcorder.

Customizing Your Camcorder

Changing the default settings with the menu 207

Troubleshooting

Types of trouble and how to correct trouble 218
Self-diagnosis display 225
Warning indicators and messages 226

Additional Information

Usable cassettes 228
About the "InfoLITHIUM" battery pack 231
About i.LINK 233
Using your camcorder abroad 235
Maintenance information and precautions 236
Specifications 242

Quick Reference

Identifying parts and controls 244
Index 254

Quick Start Guide – Recording on a tape

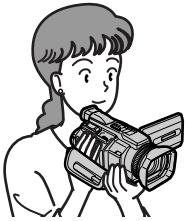

This chapter introduces you to the basic features to recorded pictures on tapes of your camcorder. See the page in parentheses "( )" for more information.

1 Connecting the power cord (p. 19)

Use the battery pack when using your camcorder outdoors (p. 15).

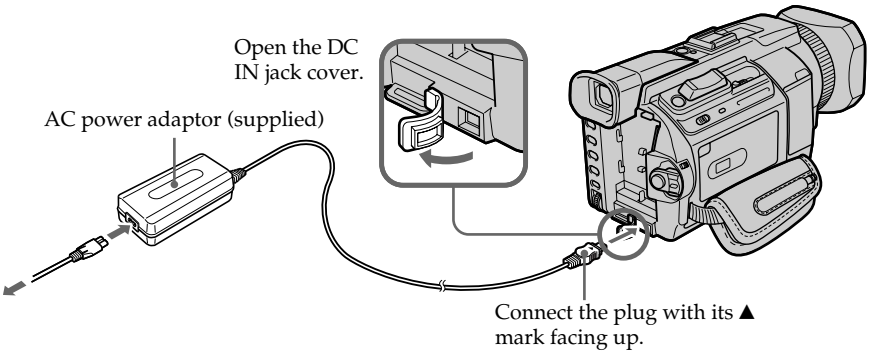

2 Inserting a cassette (p. 23)

❶ Slide OPEN/⏏ EJECT in the direction of the arrow to open the lid.

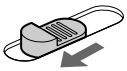

❷ Insert the cassette straight as far as possible into the cassette compartment with the window facing out and the write-protect tab facing upward.

❸ Close the cassette compartment by pressing PUSH on the cassette compartment. After the cassette compartment goes down completely, close the lid until it clicks.

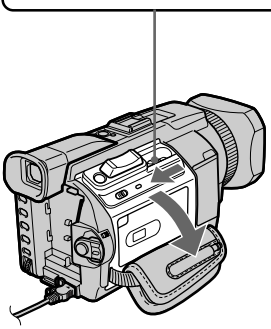

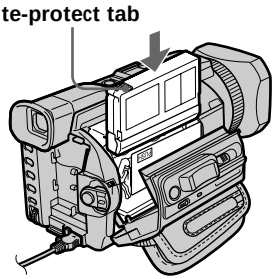

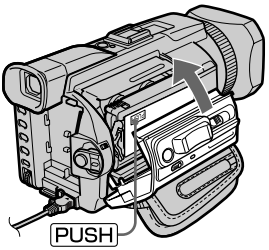

3 Recording a picture (p. 26)

1 Remove the lens cap.

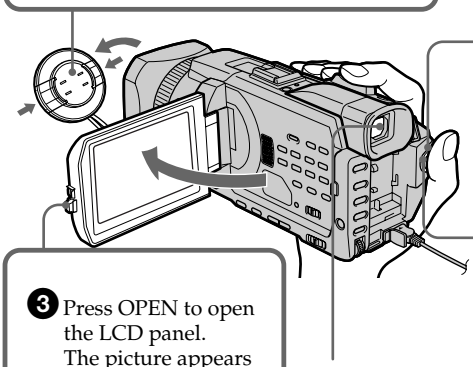

2 Set the POWER switch to CAMERA while pressing the small green button.

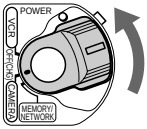

4 Press START/STOP. Your camcorder starts recording. To stop recording, press START/STOP again.

3 Press OPEN to open the LCD panel. The picture appears on the screen.

Viewfinder
When the LCD panel is closed, use the viewfinder with your eye against the eyecup.
Adjust the viewfinder lens to your eyesight (p. 30).

When you purchase your camcorder, the clock setting is set to off. If you want to record the date and time for a picture, set the clock setting before recording (p. 20).

4 Monitoring the playback picture on the LCD screen (p. 39)

1 Set the POWER switch to VCR while pressing the small green button.

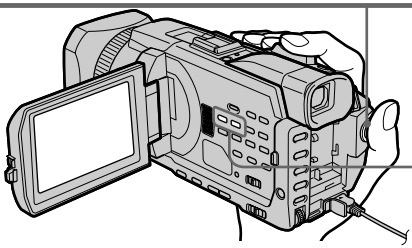

2 Press ◀◀ to rewind the tape.

REW ◀◀

3 Press ▶ to start playback.

PLAY ▷

NOTE
Do not pick up your camcorder by holding the viewfinder, the flash, the LCD panel or the battery pack.

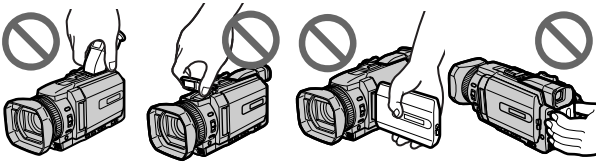

Quick Start Guide – Recording on a "Memory Stick"

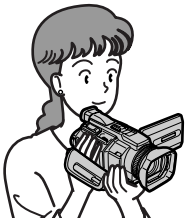

This chapter introduces you to the basic features to record on a "Memory Stick" of your camcorder. See the page in parentheses "( )" for more information.

1 Connecting the power cord (p. 19)

Use the battery pack when using your camcorder outdoors (p. 15).

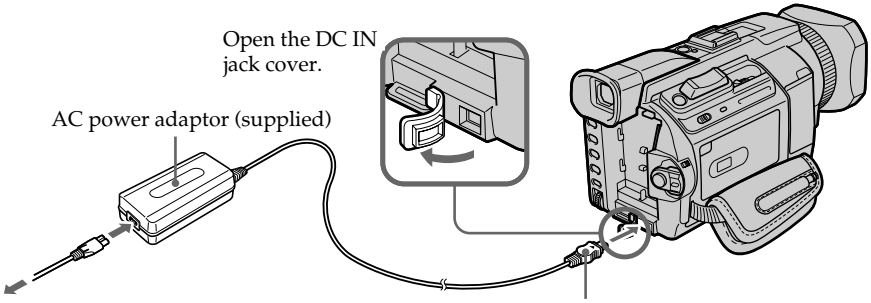

2 Inserting a "Memory Stick" (p. 128)

❶ Slide MEMORY OPEN in the direction of the arrow to open the "Memory Stick" slot.

❷ Insert a "Memory Stick" in the "Memory Stick" slot as far as it can go with the ▶ mark facing up as illustrated.

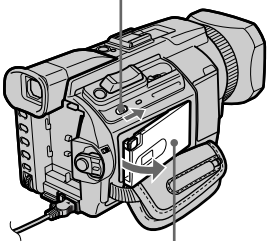

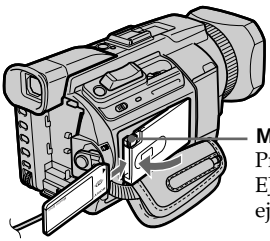

MEMORY EJECT
Press the MEMORY EJECT once lightly to eject it.

3 Recording a still image on a "Memory Stick" (p. 135)

❶ Remove the lens cap.

❷ Set the POWER switch to MEMORY/NETWORK (DCR-TRV950 only) while pressing the small green button.

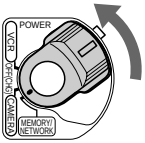

❸ Press OPEN to open the LCD panel.
The picture appears on the screen.

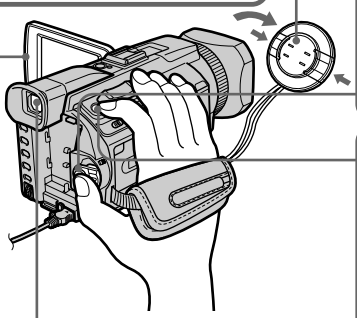

❹ Press PHOTO lightly.
You can start recording when the small green button on the screen stops flashing, and lights up.

❺ Press PHOTO deeper.
The image while pressing the button deeply is recorded on the "Memory Stick."

Viewfinder
When the LCD panel is closed, use the viewfinder with your eye against the eyecup.
Adjust the viewfinder lens to your eyesight (p. 30).

When you purchase your camcorder, the clock setting is set to off. If you want to record the date and time for a picture, set the clock setting before recording (p. 20).

4 Monitoring the playback still images on the LCD screen (p. 165)

❶ Set the POWER switch to MEMORY/NETWORK (DCR-TRV950 only) or VCR while pressing the small green button.

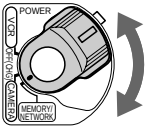

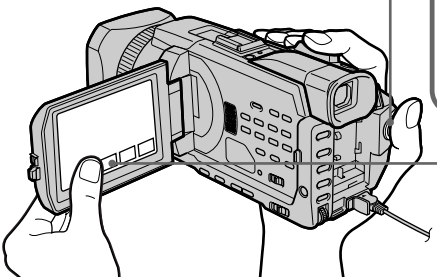

❷ Press PLAY or ▭ PB. The last recorded image is displayed.

PLAY or ▭ PB

NOTE
Do not pick up your camcorder by holding the viewfinder, the flash, the LCD panel or the battery pack.

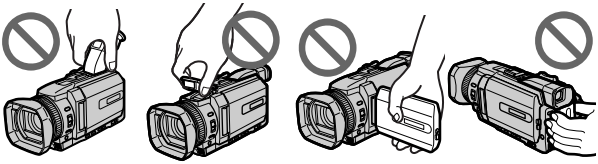

Using this manual

The instructions in this manual are for the two models listed in the table below. Before you start reading this manual and operating your camcorder, check the model number by looking at the bottom of your camcorder. The DCR-TRV950 is the model used for illustration purposes. Otherwise, the model name is indicated in the illustrations. Any differences in operation are clearly indicated in the text, for example, "DCR-TRV950 only".

As you read through this manual, buttons and settings on your camcorder are shown in capital letters.

e.g. Set the POWER switch to CAMERA.

When you carry out an operation, you can hear a beep to indicate that the operation is being carried out.

Types of differences

DCR-	TRV940	TRV950
Mark on the POWER switch	MEMORY	MEMORY/NETWORK
Network function	—	●

● Provided
— Not provided

Note on Cassette Memory

Your camcorder is based on the DV format. You can use only mini DV cassettes with your camcorder. We recommend that you use a tape with cassette memory CM.

Functions that require different operations depending on whether or not the tape has a cassette memory are:
– END SEARCH (p. 37)
– DATE SEARCH (p. 90)
– PHOTO SEARCH (p. 92)

Functions you can operate only with the cassette memory are:
– TITLE SEARCH (p. 89)
– Superimposing a title (p. 119)
– Labeling a cassette (p. 124)

For details of cassette types, see page 228.

CM only You see this mark in the introduction of features that are operated only with cassette memory.

Cassettes with cassette memory are marked by CM (Cassette Memory).

Note on TV color systems

TV color systems differ depending on the country or region. To view your recordings on a TV, you need an NTSC system-based TV.

Copyright precautions

Television programs, films, video tapes, and other materials may be copyrighted. Unauthorized recording of such materials may be contrary to the copyright laws.

Precautions on camcorder care

Lens and LCD screen/finder (on mounted models only)

- **The LCD screen and the finder are manufactured using extremely high-precision technology, so over 99.99% of the pixels are operational for effective use. However, there may be some tiny black points and/or bright points (white, red, blue or green in color) that constantly appear on the LCD screen and the finder. These points are normal in the manufacturing process and do not affect the recording in any way.**
- Do not let your camcorder get wet. Keep your camcorder away from rain and sea water. Letting your camcorder get wet may cause your camcorder to malfunction. Sometimes this malfunction cannot be repaired **[a]**.
- Never leave your camcorder exposed to temperatures above 60°C (140°F), such as in a car parked in the sun or under direct sunlight **[b]**.
- Be careful when placing the camera near a window or outdoors. Exposing the LCD screen, the finder or the lens to direct sunlight for long periods may cause malfunctions **[c]**.
- Do not directly shoot the sun. Doing so might cause your camcorder to malfunction. Take pictures of the sun in low light conditions such as dusk **[d]**.

[a]

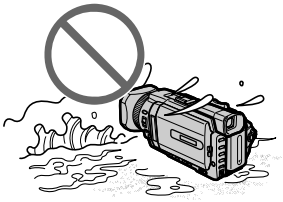

[b]

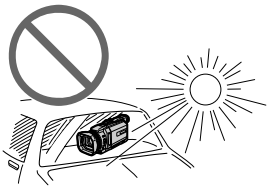

[c]

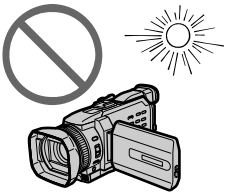

[d]

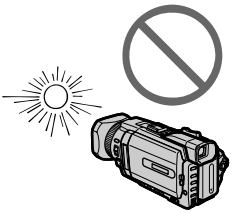

Checking supplied accessories

Make sure that the following accessories are supplied with your camcorder.

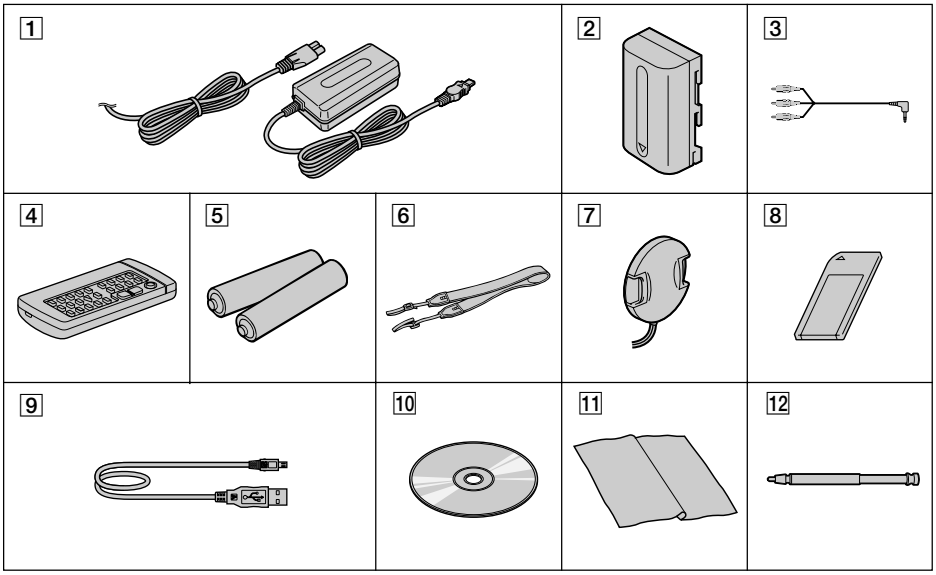

1 **AC-L10A/L10B/L10C AC power adaptor** (1), **power cord** (1) (p. 16)
2 **NP-FM50 battery pack** (1) (p. 15, 16)
3 **A/V connecting cable** (1) (p. 45)
4 **Wireless Remote Commander** (1) (p. 250)
5 **Size AA (R6) battery for Remote Commander** (2) (p. 251)
6 **Shoulder strap** (1)
7 **Lens cap** (1) (p. 26)
8 **"Memory Stick"** (1) (p. 126)
9 **USB cable** (1) (p. 183)
10 **CD-ROM (SPVD-008 USB Driver)** (1) (p. 188)
11 **Cleaning cloth** (1) (p. 237)
12 **Stylus** (1) (DCR-TRV950 only) (p. 206)

Contents of the recording cannot be compensated if recording or playback is not made due to a malfunction of the camcorder, storage media, etc.

Step 1 Preparing the power supply

Installing the battery pack

(1) Lift up the viewfinder.
(2) Slide the battery pack down until it clicks.

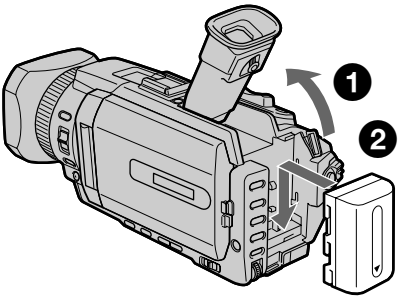

To remove the battery pack

(1) Lift up the viewfinder.
(2) Slide the battery pack out in the direction of the arrow while pressing BATT down.

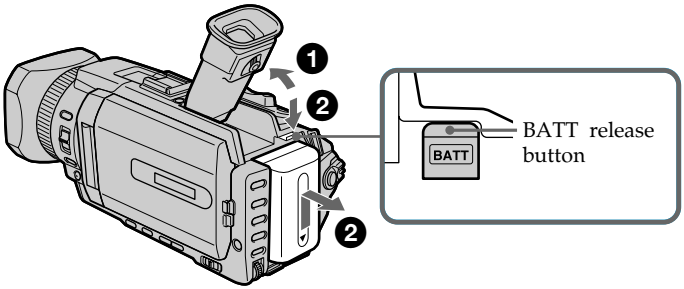

If you use the large capacity battery pack
If you install the NP-FM70/QM71/FM90/FM91/QM91 battery pack on your camcorder, extend its viewfinder.

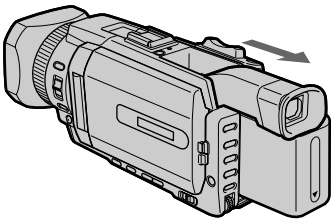

Charging the battery pack

Use the battery pack after charging it for your camcorder.
Your camcorder operates only with the **"InfoLITHIUM" battery pack (M series)**.
See page 231 for details of "InfoLITHIUM" battery pack.

(1) Open the DC IN jack cover and connect the AC power adaptor supplied with your camcorder to the DC IN jack with the plug's ▲ mark facing up.
(2) Connect the power cord to the AC power adaptor.
(3) Connect the power cord to the wall outlet.
(4) Set the POWER switch to OFF (CHG). Charging begins. The remaining battery time is indicated in minutes on the display window.

When the remaining battery indicator changes to , **normal charge** is completed. To fully charge the battery **(full charge)**, leave the battery pack attached for about one hour after normal charge is completed until FULL appears in the display window. Fully charging the battery allows you to use the battery longer than usual.

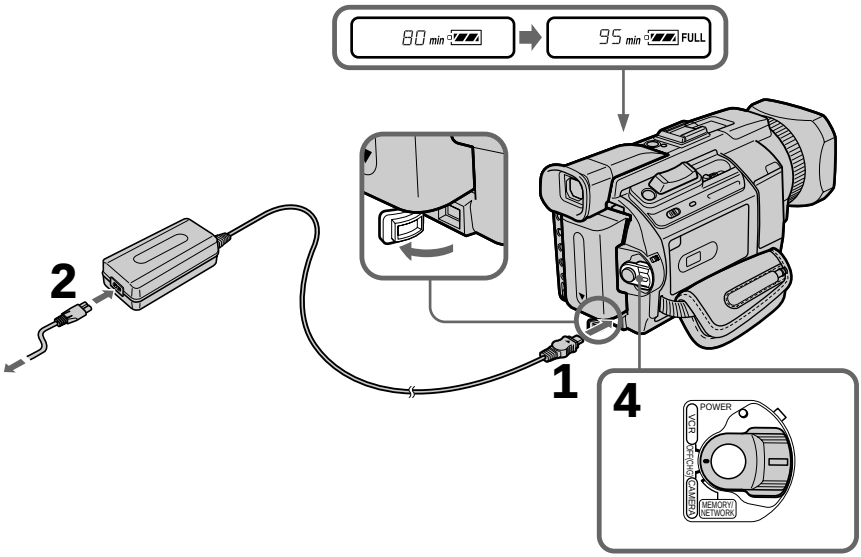

After charging the battery pack

Disconnect the AC power adaptor from the DC IN jack on your camcorder.

Note

Prevent metallic objects from coming into contact with the metal parts of the DC plug of the AC power adaptor. This may cause a short-circuit, damaging the AC power adaptor.

Remaining battery time indicator

The remaining battery time indicator in the display window indicates the approximate recording time with the viewfinder.

Until your camcorder calculates the actual remaining battery time

"---- min" appears in the display window.

When you use the AC power adaptor

Place the AC power adaptor near a wall outlet. If any trouble occurs with this unit, disconnect the plug from a wall outlet as soon as possible to cut off the power.

Charging time

Battery pack	Full charge (Normal charge)
NP-FM50 (supplied)	150 (90)
NP-FM70	240 (180)
NP-QM71	260 (200)
NP-FM90	330 (270)
NP-FM91/QM91	360 (300)

Approximate minutes at 25°C (77°F) to charge an empty battery pack
The charging time may increase if the battery's temperature is extremely high or low because of the ambient temperature.

Recording time

Battery pack	Recording with the viewfinder		Recording with the LCD screen	
	Continuous	Typical*	Continuous	Typical*
NP-FM50 (supplied)	95	50	75	40
NP-FM70	175	100	135	75
NP-QM71	200	115	155	85
NP-FM90	310	175	240	140
NP-FM91/QM91	360	205	280	160

Approximate minutes when you use a fully charged battery

* Approximate number of minutes when recording while you repeat recording start/stop, zooming and turning the power on/off. The actual battery life may be shorter.

Playing time

Battery pack	Playing time with LCD closed	Playing time on LCD screen
NP-FM50 (supplied)	180	115
NP-FM70	310	205
NP-QM71	350	235
NP-FM90	550	365
NP-FM91/QM91	635	425

Approximate minutes when you use a fully charged battery

Note

Approximate recording time and playing time at 25°C (77°F). The battery life will be shorter if you use your camcorder in a cold environment.

If the power goes off although remaining battery time indicator indicates that the battery pack has enough power to operate

Charge the battery pack fully again so that the indication on the battery remaining indicator is correct.

Recommended charging temperature

We recommend charging the battery pack in an ambient temperature of between 10°C to 30°C (50°F to 86°F).

What is "InfoLITHIUM"?

The "InfoLITHIUM" is a lithium ion battery pack that can exchange data such as battery consumption with compatible electronic equipment. This unit is compatible with the "InfoLITHIUM" battery pack (M series). Your camcorder operates only with the "InfoLITHIUM" battery. "InfoLITHIUM" M series battery packs have the InfoLITHIUM TM M SERIES mark.

"InfoLITHIUM" is a trademark of Sony Corporation.

Connecting to a wall outlet

When you use your camcorder for a long time, we recommend that you power it from a wall outlet using the AC power adaptor.

(1) Open the DC IN jack cover. Connect the AC power adaptor supplied with your camcorder to the DC IN jack on your camcorder with the plug's ▲ mark facing up.
(2) Connect the power cord to the AC power adaptor.
(3) Connect the power cord to a wall outlet.

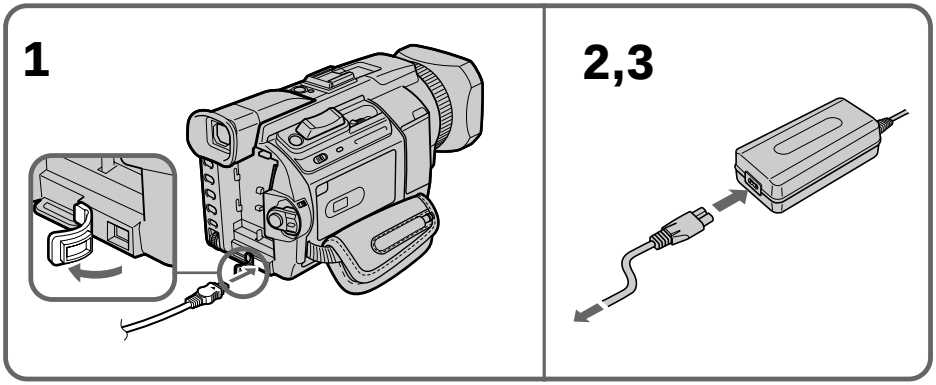

PRECAUTION
The set is not disconnected from the AC power supply (house current) as long as it is connected to the wall outlet, even if the set itself has been turned off.

Notes
- The AC power adaptor can supply power even if the battery pack is attached to your camcorder.
- The DC IN jack has "source priority." This means that the battery pack cannot supply any power if the power cord is connected to the DC IN jack, even when the power cord is not plugged into a wall outlet.

Using a car battery
Use Sony Car Battery Adaptor (optional).
Refer to the operating instructions of the Car Battery Adaptor for further information.

Step 2 Setting the date and time

Set the date and time when you use your camcorder for the first time. "CLOCK SET" will be displayed each time that you set the POWER switch to CAMERA or MEMORY/NETWORK (DCR-TRV950 only) unless you set the date and time settings.
If you do not use your camcorder for **about four months**, the date and time may be cleared from memory (bars may appear) because the built-in rechargeable battery installed in your camcorder will have been discharged (p. 239).
Set the area, the daylight saving time, year, month, day, hour and then the minute, in that order.

(1) Press MENU to display the menu settings while the POWER switch is set to CAMERA or MEMORY/NETWORK (DCR-TRV950 only).
(2) Turn the SEL/PUSH EXEC dial to select [ ], then press the dial.
(3) Turn the SEL/PUSH EXEC dial to select CLOCK SET, then press the dial.
(4) Turn the SEL/PUSH EXEC dial to select the desired area (where you are), then press the dial.
(5) Turn the SEL/PUSH EXEC dial to select whether or not the time is daylight saving time, then press the dial.
Select OFF if the time is not daylight saving time. Select ON if it is.
(6) Turn the SEL/PUSH EXEC dial to select the desired year, then press the dial.
The year changes as follows:

1995 ← · · · · → 2002 ← · · · · → 2079

(7) Set the month, day and hour by turning the SEL/PUSH EXEC dial and pressing the dial.
(8) Set the minute by turning the SEL/PUSH EXEC dial and pressing the dial by the time signal. The clock starts to move.
(9) Press MENU to make the menu settings disappear.

Step 2 Setting the date and time

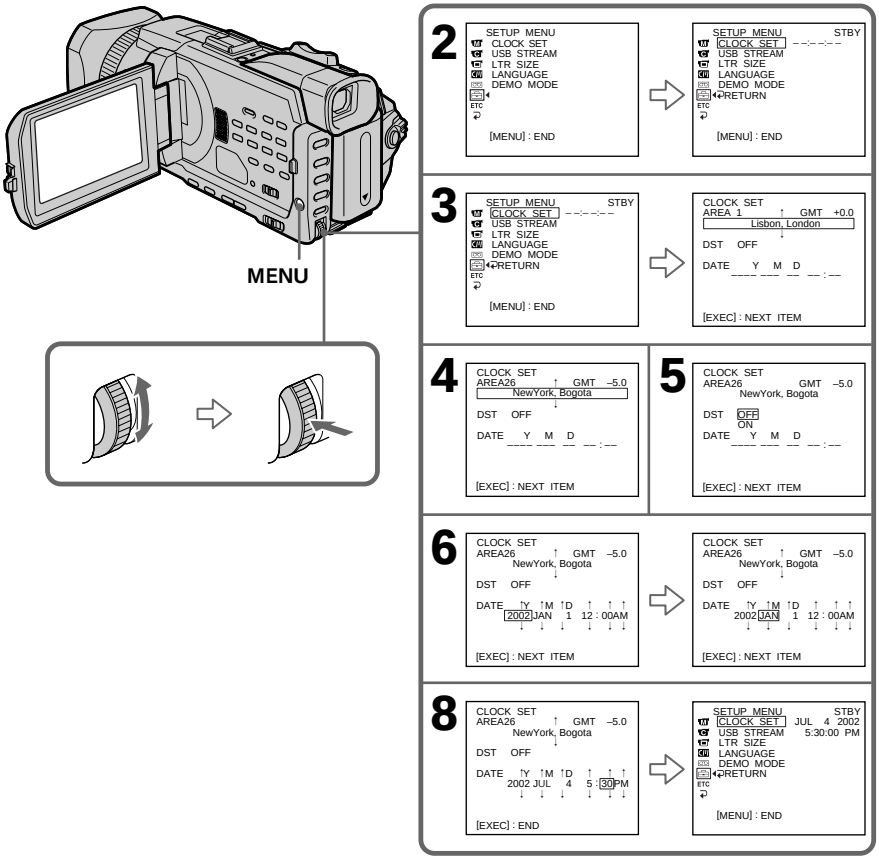

Note

Instead of DST, SUMMERTIME is displayed on the screen for some models.

If you do not set the date and time

"--:--:--" and "--- -- ----" are recorded on the data code of the tape and the "Memory Stick."

When using your camcorder abroad

Set the clock to the local time (p. 22).

If you use the camcorder in a region where daylight saving time is used

Set DST SET to ON in the menu setting.

Note on the time indicator

The internal clock of your camcorder operates on a 12-hour cycle.

- 12:00 AM stands for midnight.
- 12:00 PM stands for noon.

Simple setting of clock by a time difference

You can easily set the clock to the local time by setting a time difference. Select AREA SET, DST SET* in the menu settings. See page 216 for more information.
* Instead of DST, SUMMERTIME is displayed on the screen for some models.

World time differences

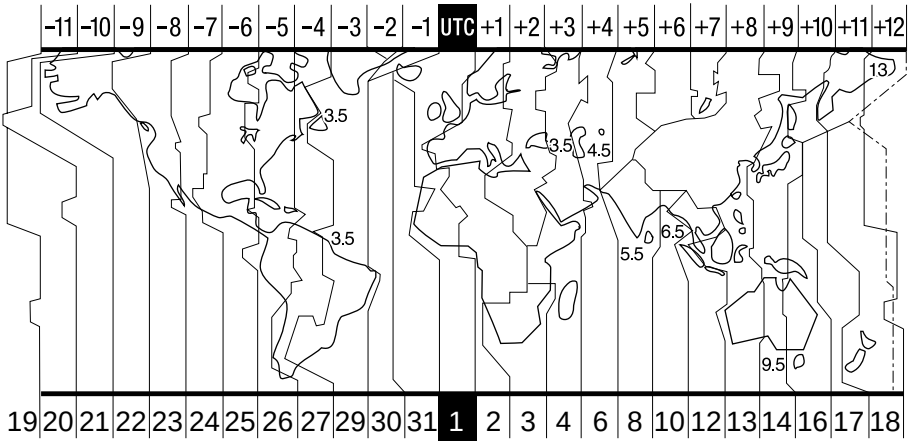

AREA	Time difference	Area or country
1	GMT	Lisbon, London
2	+01:00	Berlin, Paris
3	+02:00	Helsinki, Cairo
4	+03:00	Moscow, Nairobi
5	+03:30	Tehran
6	+04:00	Abu Dhabi, Baku
7	+04:30	Kabul
8	+05:00	Karachi, Islamabad
9	+05:30	Calcutta, New Delhi
10	+06:00	Almaty, Dhaka
11	+06:30	Rangoon
12	+07:00	Bangkok, Jakarta
13	+08:00	Hongkong, Singapore
14	+09:00	Seoul, Tokyo
15	+09:30	Adelaide, Darwin
16	+10:00	Melbourne, Sydney

AREA	Time difference	Area or country
17	+11:00	Solomon Is
18	+12:00	Fiji, Wellington
19	–12:00	Eniwetok, Kwajalein
20	–11:00	Midway Is., Samoa
21	–10:00	Hawaii
22	–09:00	Alaska
23	–08:00	LosAngeles, Tijuana
24	–07:00	Denver, Arizona
25	–06:00	Chicago, MexicoCity
26	–05:00	New York, Bogota
27	–04:00	Santiago
28	–03:30	St. John's
29	–03:00	Brasilia, Montevideo
30	–02:00	Fernando de Noronha
31	–01:00	Azores

To adjust a time difference

Select AREA SET in the menu setting, and select an area or a country you want to adjust to, then press SEL/PUSH EXEC dial.

Step 3 Inserting a cassette

(1) Prepare the power supply.
(2) Slide ⌐OPEN/⏏ EJECT in the direction of the arrow and open the lid.
The cassette compartment automatically lifts up and opens.
(3) Insert the cassette straight as far as possible into the cassette compartment with the window facing out and the write-protect tab facing upward.
(4) Close the cassette compartment by pressing PUSH on the cassette compartment.
The cassette compartment automatically goes down.
(5) After the cassette compartment goes down completely, close the lid until it clicks.

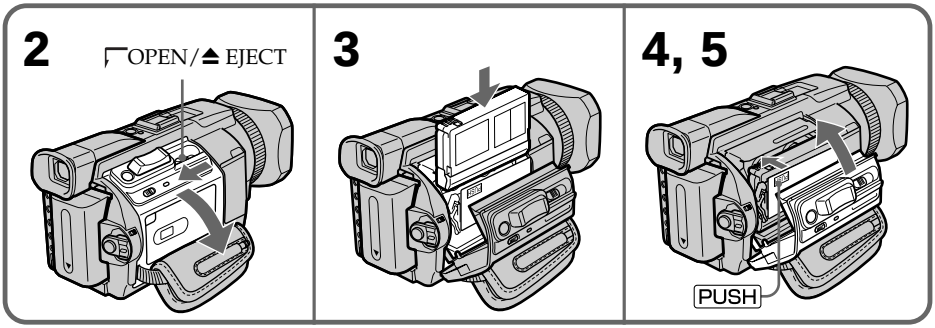

To eject a cassette

Follow the procedure above, and take out the cassette in step 3.

Notes

- Do not press the cassette compartment down forcibly. Doing so may cause a malfunction.
- The cassette compartment may not be closed when you press any part of the cassette compartment other than the PUSH mark.

When you use a cassette with cassette memory

Read the instruction about cassette memory to use this function properly (p. 228).

To prevent accidental erasure

Slide the write-protect tab on the cassette to expose the red mark.

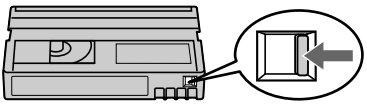

Step 4 Using the touch panel

Your camcorder has operation buttons on the LCD screen. Touch the LCD screen directly with your finger or the supplied stylus (DCR-TRV950 only) to operate each function. This section describes how to operate the touch panel during recording or playing back images on a tape.

(1) Prepare the power supply (p. 15 to 19).
(2) Press OPEN to open the LCD panel.
(3) Set the POWER switch to CAMERA or VCR while pressing the small green button.
(4) Press FN. Operation buttons appear on the LCD screen.
(5) Press PAGE2 to go to PAGE2. Operation buttons appear on the LCD screen.
(6) Press a desired operation item. Refer to relevant pages of this manual for each function.

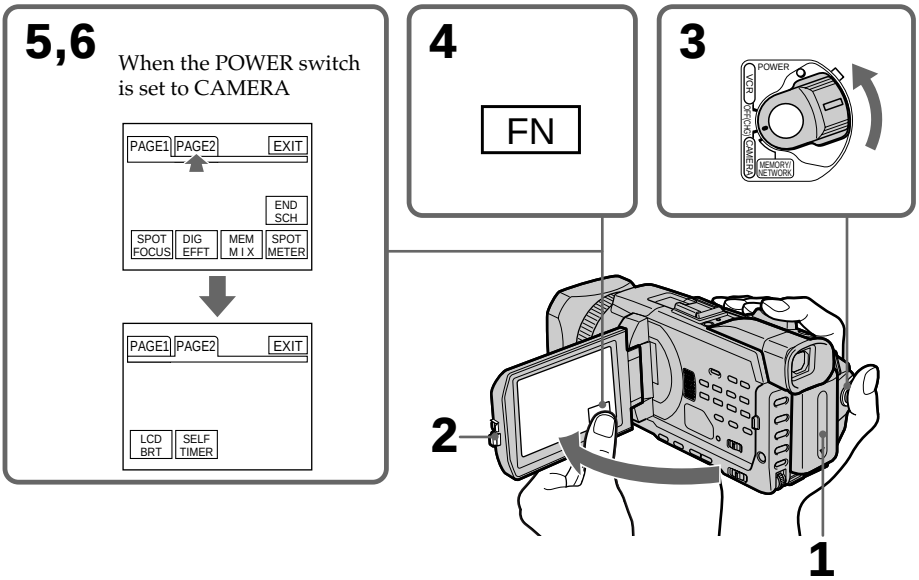

To return to FN
Press EXIT.

To execute settings
Press ↩ OK. The display returns to PAGE1/PAGE2.

To cancel settings
Press ↩ OFF to return to PAGE1/PAGE2.

Notes

- When using the touch panel, press operation buttons with your thumb supporting the LCD panel from the back side of it or press those buttons lightly with your index finger.
- Do not press the LCD screen with sharp-pointed objects other than the supplied stylus. (DCR-TRV950 only)
- Do not press the LCD screen too hard.
- Do not touch the LCD screen with wet hands.
- If FN is not on the LCD screen, touch the LCD screen lightly to make it appear. You can control the display with DISPLAY/TOUCH PANEL on your camcorder.
- When operation buttons do not work even if you press them, an adjustment is required (CALIBRATION) (p. 238).
- When the LCD screen gets dirty, clean it with the supplied cleaning cloth.

When executing each item

The green bar appears above the item.

If the items are not available

The color of the items changes to gray.

Press FN to display the following buttons:

When the POWER switch is set to CAMERA

PAGE1	END SCH, SPOT FOCUS, DIG EFFT, MEM MIX, SPOT METER
PAGE2	LCD BRT, SELFTIMER

When the POWER switch is set to VCR

PAGE1	LCD BRT, PB, INDEX, END SCH
PAGE2	PB ZOOM, PB, INDEX, DIG EFFT

See page 129 when the POWER switch is set to MEMORY/NETWORK (DCR-TRV950 only).

Recording a picture

Your camcorder automatically focuses for you.

(1) Remove the lens cap by pressing both knobs on its sides and pull the lens cap string to fix it.
(2) Prepare the power supply and insert a cassette. See “Step 1” to “Step 3” for more information (p. 15 to 23).
(3) Set the POWER switch to CAMERA while pressing the small green button. This sets your camcorder to the standby.
(4) Press OPEN to open the LCD panel. The viewfinder automatically turns off.
(5) Press START/STOP. Your camcorder starts recording. The REC indicator appears. The camera recording lamp located on the front of your camcorder lights up. To stop recording, press START/STOP again.

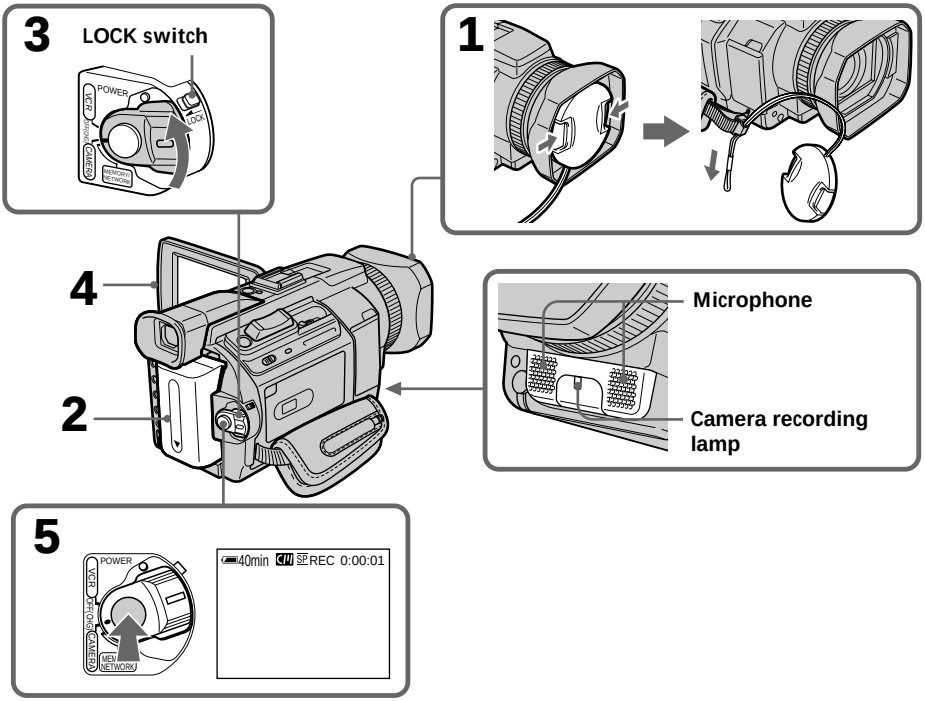

Notes

- Fasten the grip strap firmly.
- The recording data (date/time or various settings when recorded) are not displayed while recording. However, they are recorded automatically on the tape. To display the recording data, press the DATA CODE button during playback you can also use the Remote Commander for this operation (p. 41).

Note on recording

Your camcorder records and plays back in the SP (standard play) mode and in the LP (long play) mode. Select SP or LP in the menu settings (p. 214). In the LP mode, you can record **1.5 times** as long as in the SP mode.
When you record a tape in the LP mode on your camcorder, we recommend playing back the tape on your camcorder.

Note on the LOCK switch

When you slide the LOCK switch in the direction of the arrow, the POWER switch can no longer be set to MEMORY/NETWORK (DCR-TRV950 only) accidentally. The LOCK switch is set to the further side (unlock position) as the default setting.

To enable smooth transition

Transition between the last scene you recorded and the next scene is smooth as long as you do not eject the cassette even if you turn off your camcorder.
However, check the following:
– Do not mix recordings in the SP mode and in the LP mode on one tape.
– When you change the battery pack, set the POWER switch to OFF (CHG).
– When you use a cassette with cassette memory, however, you can make the transition smooth even after ejecting the cassette if you use the END SEARCH (p. 37).

If you leave your camcorder in the standby for five minutes while the cassette is inserted

Your camcorder automatically turns off. This is to save battery power and to prevent battery and tape wear. To return to the standby, set the POWER switch to OFF (CHG) and then back to CAMERA. To start recording, press the START/STOP button again without switching the POWER switch. However, your camcorder does not turn off automatically while the cassette is not inserted.

When you record in the SP and LP modes on one tape or you record in the LP mode

- The transition between scenes may not be smooth.
- The playback picture may be distorted or the time code may not be written properly between scenes.

The battery use time when you record using the LCD screen

The battery time is slightly shorter than the shooting time using the viewfinder.

After recording

(1) Set the POWER switch to OFF (CHG).
(2) Close the LCD panel.
(3) Eject the cassette.
(4) Remove the battery pack.

Adjusting the LCD screen

The LCD panel can be opened up to 90 degrees.
The LCD panel moves about 90 degrees to the viewfinder side and about 180 degrees to the lens side.

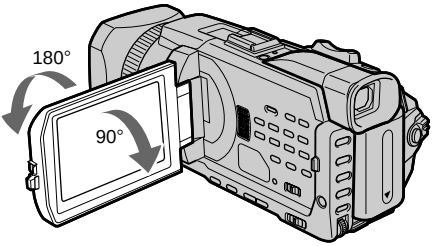

When closing the LCD panel, set it vertically, and swing it into the camcorder body.

Note
When the LCD panel is opened, the viewfinder automatically turns off and no image is displayed in the viewfinder. However, in the Mirror Mode, images are displayed in the viewfinder as well (p. 32).

LCD screen
- When you use the LCD screen outdoors in direct sunlight, the LCD screen may be difficult to see. If this happens, we recommend that you use the viewfinder.
- When you adjust the angle of the LCD panel, make sure if the LCD panel is opened up to 90 degrees.

Adjusting the brightness of the LCD screen

(1) Press FN and select PAGE2 while the POWER switch is set to CAMERA or MEMORY/NETWORK (DCR-TRV950 only).
When you set the POWER switch to VCR, press FN to display PAGE1.
(2) Press LCD BRT. The screen to adjust the brightness of the LCD screen appears.
(3) Adjust the brightness of the LCD screen using –/+.
– : to dim
+ : to brighten
(4) Press ↩ OK to return to PAGE1/PAGE2.

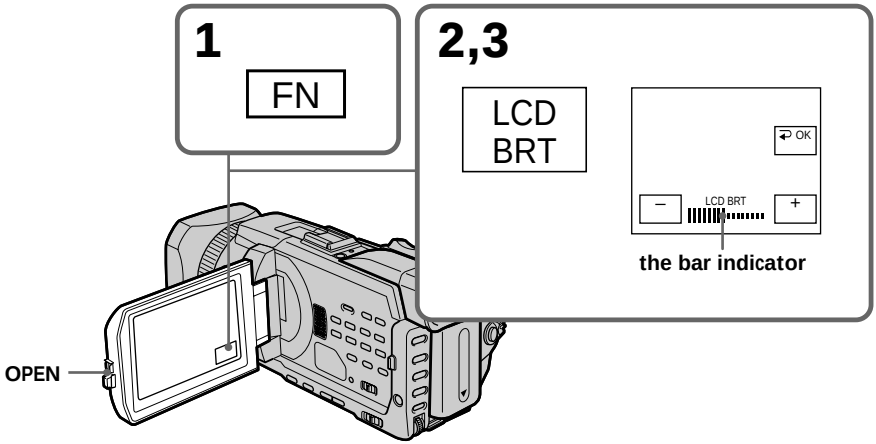

To return to FN

Press EXIT.

LCD screen backlight

You can change the brightness of the backlight. Select LCD B.L. in the menu settings when using the battery pack (p. 210).

Even if you adjust LCD BRT

The recorded picture will not be affected.

Adjusting the viewfinder

If you record pictures with the LCD panel closed, check the picture with the viewfinder. Adjust the viewfinder lens to your eyesight so that the images in the viewfinder come into sharp focus.

Lift up the viewfinder and move the viewfinder lens adjustment lever.

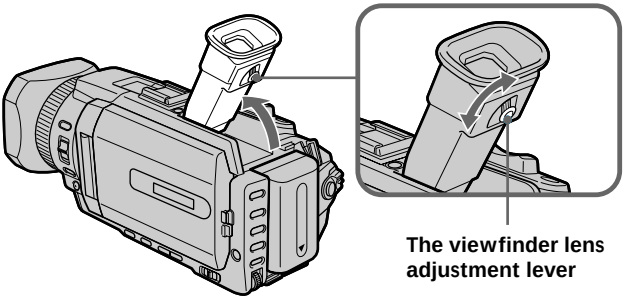

Viewfinder backlight

You can change the brightness of the backlight. Select VF B.L. in the menu settings when using the battery pack (p. 210).

Using the zoom feature

Move the power zoom lever a little for a slower zoom. Move it further for a faster zoom. Using the zoom sparingly results in better-looking recordings.
W : Wide-angle (subject appears farther away)
T : Telephoto (subject appears closer)

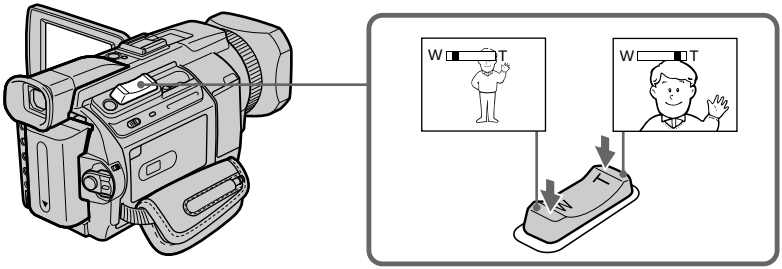

To use zoom greater than 12×
Zoom greater than 12× is performed digitally. Digital zoom can be set to 24× or 150×. To activate digital zoom, select the digital zoom power in D ZOOM in the menu settings (p. 209). The digital zoom is set to OFF as a default setting.

The right side of the bar shows the digital zooming zone.
The digital zooming zone appears when you select the digital zoom power in the menu settings.

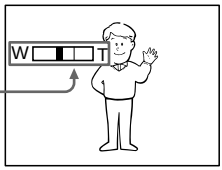

When you shoot close to a subject
If you cannot get a sharp focus, move the power zoom lever to the "W" side until the focus is sharp. You can shoot a subject that is at least about 80 cm (about 2 feet 5/8 inch) away from the lens surface in the telephoto position, or about 1 cm (about 1/2 inch) away in the wide-angle position.

Note on digital zoom
The picture quality deteriorates as you move the power zoom lever towards the "T" side.

When the POWER switch is set to MEMORY/NETWORK (DCR-TRV950 only)
You cannot use the digital zoom.

Shooting with the Mirror Mode

This feature allows the camera subject to view him-or herself on the LCD screen. The subject uses this feature to check his or her own image on the LCD screen while you look at the subject in the viewfinder.

Set the POWER switch to CAMERA or MEMORY/NETWORK (DCR-TRV950 only).
Rotate the LCD screen 180 degrees.
The ☺ indicator appears in the viewfinder and on the LCD screen.

❚❚● appears in the standby, and ● appears in the recording while the POWER switch is set to CAMERA. Some of other indicators appear mirror-reversed and others are not displayed.

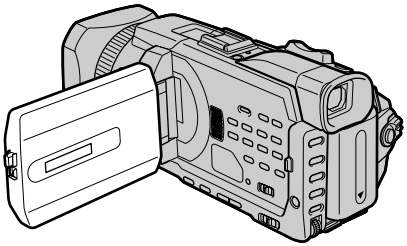

Picture in the mirror mode
The picture on the LCD screen is a mirror-image. However, the picture will be normal when recorded.

During recording in the mirror mode
- ZERO SET MEMORY on the Remote Commander does not work.
- FN appears mirror-reversed in the viewfinder.

When you press FN
The ☺ does not appear on the screen.

Indicators displayed in the recording

Indicators are not recorded on tapes.

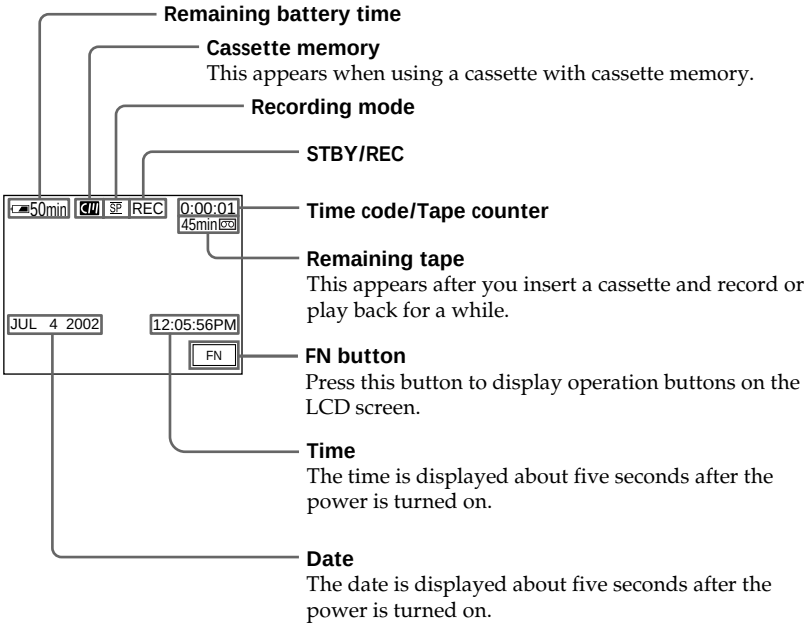

Remaining battery time indicator during recording
The remaining battery time indicator roughly indicates the continuous recording time. The indicator may not be correct, depending on the conditions in which you are recording. When you close the LCD panel and open it again, it takes about one minute for the correct remaining battery time in minutes to be displayed.

Time code
The time code indicates the recording or playback time, "0:00:00" (hours : minutes : seconds) in CAMERA and "0:00:00:00" (hours : minutes : seconds : frames) in VCR. You cannot rewrite only the time code.

Remaining tape indicator
The indicator may not be displayed accurately depending on the tape.

Recording data
The recording data (date/time or various settings when recorded) are not displayed while recording. However, they are recorded automatically on the tape. To display the recording data, press the DATA CODE button during playback. You can also use the Remote Commander for this operation (p. 41).

Shooting backlit subjects – BACK LIGHT

When you shoot a subject with the light source behind the subject or a subject with a light background, use the backlight function.

Press BACK LIGHT while the POWER switch is set to CAMERA or MEMORY/NETWORK (DCR-TRV950 only).
The ⧄ indicator appears on the screen. To cancel, press BACK LIGHT again.

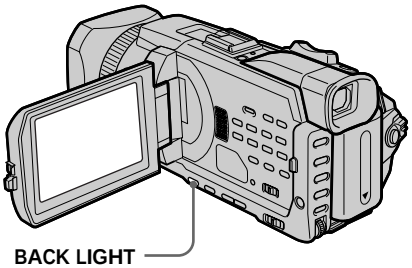

When shooting backlit subjects
If you press SPOT LIGHT, EXPOSURE or SPOT METER, the backlight function will be canceled.

When you manually adjust the exposure
You cannot use the backlight function.

Shooting subjects lit by strong light – SPOT LIGHT

This function prevents people's faces, for example, from appearing excessively white when shooting subjects lit by strong light, such as in the theater.

Press SPOT LIGHT while the POWER switch is set to CAMERA or MEMORY/ NETWORK (DCR-TRV950 only).
The indicator appears on the screen. To cancel, press SPOT LIGHT again.

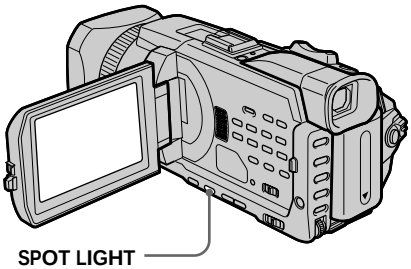

when shooting spotlighted subjects
If you press BACK LIGHT, EXPOSURE or SPOT METER, the spot light function will be canceled.

When you manually adjust the exposure
You cannot use the spot light function.

Self-timer recording

Recording with the self-timer starts in 10 seconds automatically. You can also use the Remote Commander for this operation.

(1) In the standby, press FN and select PAGE2.
(2) Press SELFTIMER.
The ⏲ (self-timer) indicator appears on the screen.
(3) Press START/STOP.
The self-timer starts counting down from 10 with a beep. In the last two seconds of the countdown, the beep gets faster, then recording starts automatically.

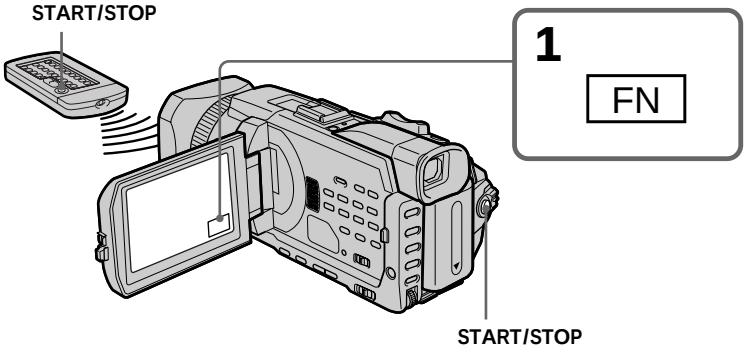

To stop the count down

Press START/STOP.
To restart the countdown, press START/STOP again.

To cancel the self-timer

Press SELFTIMER so that the ⏲ (self-timer) indicator disappears from the screen while your camcorder is in the standby.

Note

The self-timer is automatically canceled when:
– The self-timer recording is finished.
– The POWER switch is set to OFF (CHG) or VCR.

When the POWER switch is set to MEMORY/NETWORK (DCR-TRV950 only)

You can also record still images on a "Memory Stick" with the self-timer (p. 143).

Checking recordings – END SEARCH / EDITSEARCH / Rec Review

You can use these buttons to check the recorded picture or shoot so that the transition between the last recorded scene and the next scene you record is smooth.

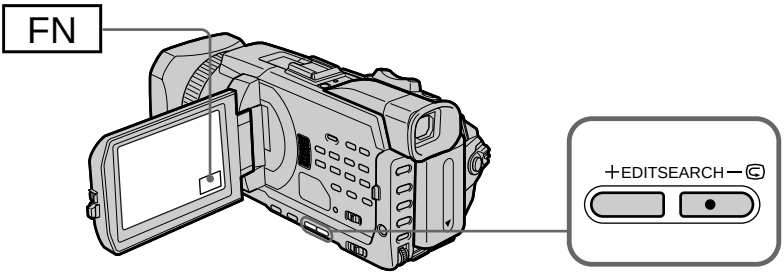

END SEARCH

You can go to the end of the recorded section after you record.

(1) In the standby, press FN to display PAGE1.
(2) Press END SCH.
The last five seconds of the recorded section are played back and your camcorder returns to the standby. You can monitor the sound from the speaker or headphones.

To return to FN

Press EXIT.

To stop searching

Press END SCH again.

End search

When you use a cassette without cassette memory, the end search function does not work once you eject the cassette after you have recorded on the tape. If you use a cassette with cassette memory, the end search works even once you eject the cassette.

If a tape has a blank portion between recorded portions

The end search may not work correctly.

EDITSEARCH

You can search for the next recording start point.

Hold down the EDITSEARCH in the standby. The recorded portion is played back.

– : To go backward
+ : To go forward

Release EDITSEARCH to stop playback. If you press START/STOP, recording begins from the point you released EDITSEARCH. You cannot monitor the sound.

Rec Review

You can check the last recorded section.

Press the – side of EDITSEARCH momentarily in the standby.
The section you have stopped most recently will be played back for a few seconds, and then your camcorder will return to the standby. You can monitor the sound from the speaker or headphones.

Playing back a tape

You can monitor the playback picture on the screen. If you close the LCD panel, you can monitor the playback picture in the viewfinder. You can control playback using the Remote Commander supplied with your camcorder.

(1) Prepare the power supply and insert the recorded tape.
(2) Set the POWER switch to VCR while pressing the small green button.
(3) Open the LCD panel while pressing OPEN.
(4) Press ◀◀ to rewind the tape.
(5) Press ▶ to start playback.
(6) To adjust the volume, press either of the two buttons on VOLUME.
– : To turn down
+ : To turn up
When you close the LCD panel, sound is muted.

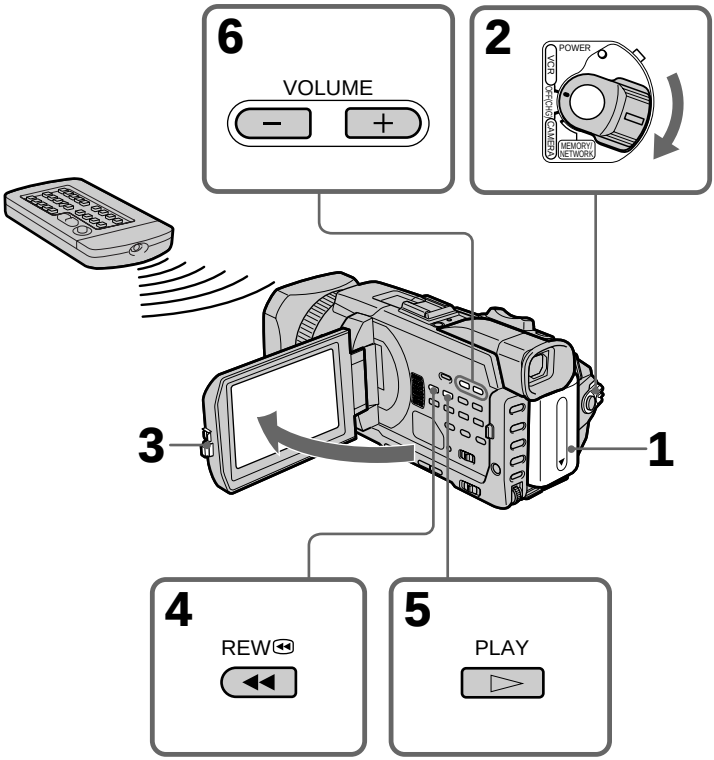

To stop playback

Press ■.

When monitoring on the LCD screen
You can turn the LCD panel over and move it back to the camcorder body with the LCD screen facing out.

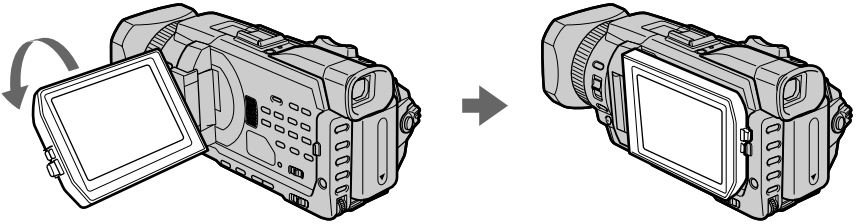

If you leave the power on for a long time
Your camcorder gets warm. This is not a malfunction.

When you open or close the LCD panel
Make sure that the LCD panel is set vertically.

To display the screen indicators – Display function

Press DISPLAY/TOUCH PANEL on your camcorder or DISPLAY on the Remote Commander supplied with your camcorder. The indicators disappear on the screen. To make the indicators appear, press DISPLAY/TOUCH PANEL or DISPLAY again.

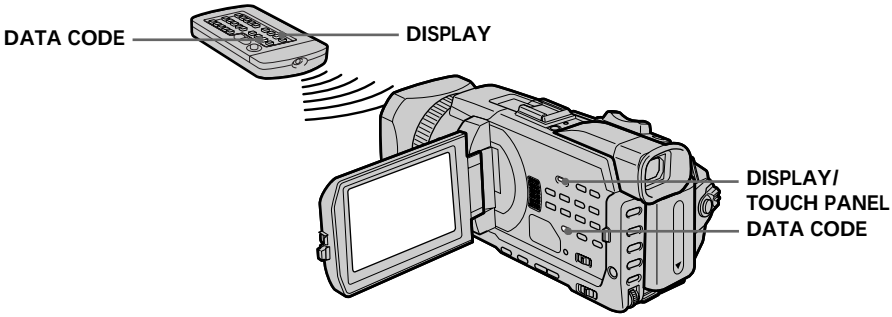

About date/time and various settings

Your camcorder automatically records not only images on the tape but also the recording data (date/time or various settings when recorded) **(data code)**.

① Set the POWER switch to VCR, then play back a tape.
② Press DATA CODE on your camcorder or the Remote Commander.

The display changes as follows when you press the DATA CODE:
date/time → various settings (SteadyShot, exposure, white balance, gain, shutter speed, aperture value) → no indicator

Date/time

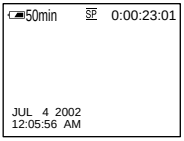

Various settings

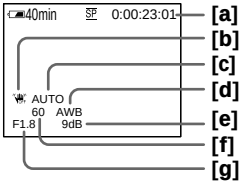

[a] Tape counter
[b] SteadyShot OFF
[c] Exposure mode
[d] White balance
[e] Gain
[f] Shutter speed
[g] Aperture value

To not display various settings

Set DATA CODE to DATE in the menu settings (p. 216).
The display changes as follows when you press DATA CODE :
date/time ⟷ no indicator

Various settings

Various settings are your camcorder's information when you have recorded. In the recording, the various settings will not be displayed.

When you use the data code, bars (-- -- --) appear if:

– A blank portion of the tape is being played back.
– The tape is unreadable due to tape damage or noise.
– The tape was recorded by a camcorder without the date and time set.

Data code

When you connect your camcorder to the TV, the data code appears on the TV screen.

Remaining battery time indicator during playback

The indicator indicates the approximate continuous playback time. The indicator may not be correct, depending on the conditions in which you are playing back. When you close the LCD panel and open it again, it takes about one minute for the correct remaining battery time to be displayed.

Various playback modes

To operate video control buttons, set the POWER switch to VCR.

To play back pause (viewing a still picture)

Press ❚❚ during playback. To resume normal playback, press ► or ❚❚.

To advance the tape

Press ►► in the stop mode. To resume normal playback, press ►.

To rewind the tape

Press ◄◄ in the stop mode. To resume normal playback, press ►.

To change the playback direction

Press < on the Remote Commander during playback to reverse the playback direction. To resume normal playback, press ►.

To locate a scene monitoring the picture (picture search)

Keep pressing ◄◄ or ►► during playback. To resume normal playback, release the button.

To monitor high-speed pictures while advancing or rewinding the tape (skip scan)

Keep pressing ◄◄ while rewinding or ►► while advancing the tape. To resume rewinding or advancing, release the button.

To view the picture at slow speed (slow playback)

Press ❚► on the Remote Commander during playback. For slow playback in the reverse direction, press < , then press ❚► on the Remote Commander. To resume normal playback, press ►.

To view pictures at double speed

Press ×2 on the Remote Commander during playback. For double speed playback in the reverse direction, press < , then press ×2 on the Remote Commander. To resume normal playback, press ►.

To view pictures frame-by-frame

Press ❚❚► on the Remote Commander in the playback pause. For frame-by-frame playback in the reverse direction, press ◄❚❚. To resume normal playback, press ►.

To search the last scene recorded (END SEARCH)

Press FN, then press END SCH in the stop mode. The last five-second recorded portion is played back and then stopped.

In the various playback modes

- Sound is muted.
- The previous picture may remain as a mosaic image during playback.

When the playback pause lasts for five minutes

Your camcorder automatically enters the stop mode. To resume playback, press ►.

Slow playback

The slow playback can be performed smoothly on your camcorder. However, this function does not work for an output signal through the i DV Interface.

When you play back a tape in reverse

Horizontal noise may appear at the center, or the top and bottom of the screen. This is not a malfunction.

Viewing the recording on TV

Connect your camcorder to your TV with the A/V connecting cable supplied with your camcorder to watch playback picture on the TV screen. You can operate the video control buttons in the same way as when you monitor playback pictures on the screen. When monitoring playback pictures on the TV screen, we recommend that you power your camcorder from a wall outlet using the AC power adaptor (p. 19). Refer to the operating instructions of your TV.

Open the jack cover. Connect your camcorder to the TV with the A/V connecting cable supplied with your camcorder. Then, set the TV/VCR selector on the TV to VCR.

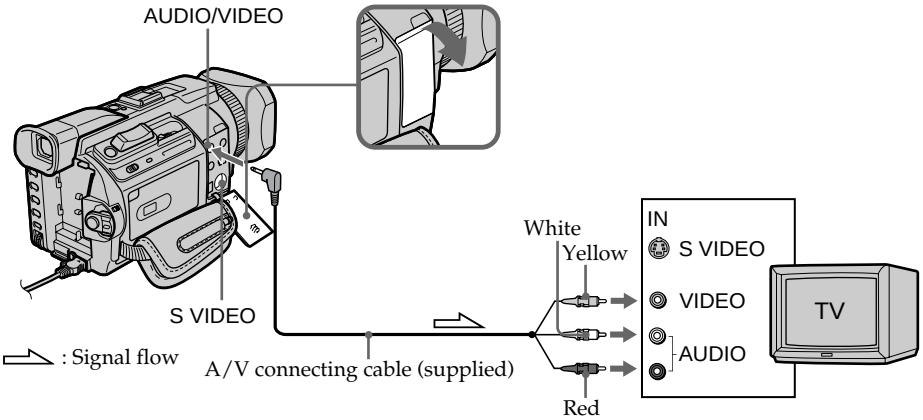

If your TV is already connected to a VCR

Connect your camcorder to the LINE IN input on the VCR by using the A/V connecting cable supplied with your camcorder. Set the input selector on the VCR to LINE.

If your TV or VCR is a monaural type

Connect the yellow plug of the A/V connecting cable to the video input jack and the white or the red plug to the audio input jack on the VCR or the TV. If you connect the white plug, the sound is L (left) signal. If you connect the red plug, the sound is R (right) signal.

If your TV has an S video jack

Pictures can be reproduced more faithfully by using an S video cable (optional). With this connection, you do not need to connect the yellow (video) plug of the A/V connecting cable. Connect the S video cable (optional) to the S video jacks on both your camcorder and the TV.
This connection produces higher quality DV format pictures.

To display the screen indicators on TV

Set DISPLAY to V-OUT/LCD in the menu settings (p. 217).
Then, press DISPLAY/TOUCH PANEL on your camcorder. To turn the screen indicators off, press DISPLAY/TOUCH PANEL on your camcorder again.

Recording still images on a "Memory Stick" during tape recording

You can record still images on a "Memory Stick" in the tape recording or tape recording standby. You can also record still images on a tape (p. 51).

Before operation

- Insert a "Memory Stick" into your camcorder.
- Set PHOTO REC in to MEMORY in the menu settings (The default setting is MEMORY).

(1) In the standby, keep pressing PHOTO lightly until a still image appears. The CAPTURE indicator appears. Recording does not start yet. To change from the selected still image to another image, release PHOTO once and press it lightly again.

(2) Press PHOTO deeper.
Recording is complete when the bar scroll indicator disappears.
The image while pressing the button deeply is recorded on the "Memory Stick."

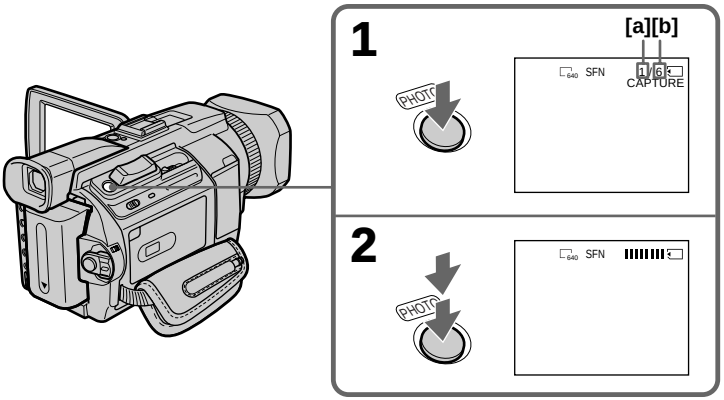

[a] : Number of the recorded images
[b] : Approximate number of the images that can be recorded on the "Memory Stick"

Notes

- When recording a still image, do not shake your camcorder. If you do so, the image may flutter.
- You cannot record still images on a "Memory Stick" during following operations (The indicator flashes on the screen.):
  – Wide mode
  – Fader
  – Picture effect
  – Digital effect
  – MEMORY MIX

"Memory Stick"

For details, see page 126 for more information.

Image size of still images
Image size is automatically set to 640 × 480.
When you want to record still images in different size, use the Memory Photo recording (p. 135).

When the POWER switch is set to CAMERA
You cannot select image quality.
The image quality when you set the POWER switch to MEMORY/NETWORK (DCR-TRV950 only) is used. (The default setting is SUPER FINE).

During and after recording still images on a "Memory Stick"
Your camcorder continues recording on tape.

When you press PHOTO on the Remote Commander
Your camcorder immediately records the image that is on the screen when you press the button.

To record still images on a "Memory Stick" during tape recording
You cannot check an image on the screen by pressing PHOTO lightly. The image when you press PHOTO will be recorded on the "Memory Stick."

To record images with higher quality
We recommend that you use the Memory Photo recording (p. 135).

Title
The title cannot be recorded.

Recording images with the flash

The flash pops up automatically. The default setting is auto (no indicator). To change the flash mode, press ϟ (flash) repeatedly until the flash mode indicator appears on the screen.

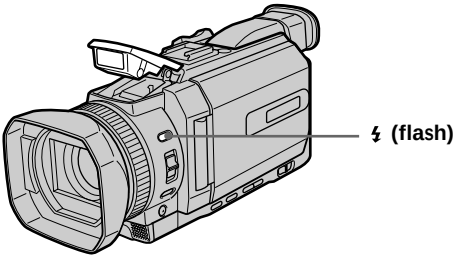

Each press of ϟ (flash) changes the indicator as follows:

→ ϟ → → (no indicator)

Auto red-eye reduction:	The flash fires before recording to reduce red-eye.
ϟ Forced flash:	The flash fires regardless of the surrounding brightness.
No flash:	The flash does not fire.

The flash is automatically adjusted to the appropriate brightness. You can also change FLASH LVL to the desired brightness in the menu settings (p. 208). Try recording various images to find the most appropriate setting for FLASH LVL.

Notes

- Attaching the lens hood or a conversion lens (optional) may block the light from the flash or cause lens shadow to appear.
- You cannot use an external flash (optional) and the built-in flash at the same time.
- (auto red-eye reduction) may not produce the desired effect depending on individual differences, the distance to the subject, the subject not looking at the pre-recording flash or other conditions.
- A flash effect cannot be obtained easily when you use forced flash in a bright location.
- When recording with the flash, it takes longer to prepare for image capture. This is because your camcorder starts to charge power for firing after the flash pops up. Darken the surroundings by covering the lens, and press PHOTO lightly so that your camcorder starts to charge power after the flash pops up.
- If it is not easy to focus on the subject automatically, for example, when recording in the dark, use the focal distance information (p. 77) for focusing manually.

When the flashlight does not reach to the subject

The color of the image may change.

If you leave your camcorder for five or more minutes after removing the power supply

Your camcorder returns to the default setting (auto).

You cannot shoot images with the flash during the following operations:
– Tape Recording
– Shutter speed (1/30 or smaller) adjustment

The flash does not fire even if you select auto (no indicator) and 👁 (auto red-eye reduction) during the following operations:
– Spot light
– Shutter speed adjustment
– Sunset & moon of PROGRAM AE
– Landscape of PROGRAM AE
– Exposure
– Flexible Spot Meter

When you use an external flash (optional) which does not have the auto red-eye reduction
You cannot select the auto red-eye reduction.

Self-timer recording

You can record still images on a "Memory Stick" with the self-timer. You can also use the Remote Commander for this operation.

Before operation
- Insert a "Memory Stick" into your camcorder.
- Set PHOTO REC in to MEMORY in the menu settings.(The default setting is MEMORY.)

(1) In the standby, press FN and select PAGE2.
(2) Press SELFTIMER.
The (self-timer) indicator appears on the screen.
(3) Press PHOTO deeper.
The self-timer starts counting down from 10 with a beep. In the last two seconds of the countdown, the beep gets faster, then the recording starts automatically.

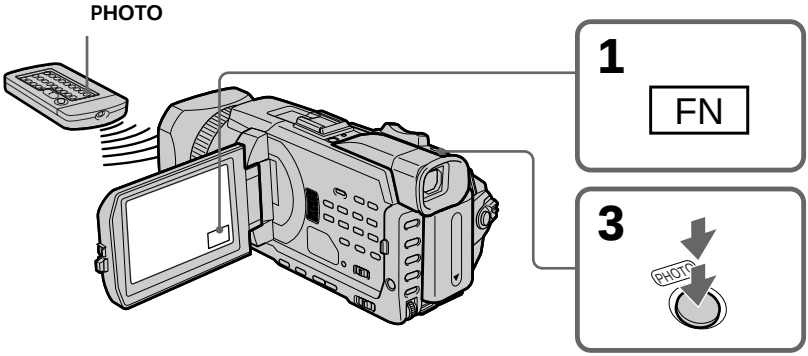

To cancel the self-timer

Press SELFTIMER so that the (self-timer) indicator disappears from the screen while your camcorder is in the standby. You cannot stop the count down.

Note
The self-timer is automatically canceled when:
– The self-timer is finished.
– The POWER switch is set to OFF (CHG) or VCR.

Self-timer recording
You can operate the self-timer recording only during the recording standby.

Recording still images on a tape – Tape Photo recording

You can record still images such as photographs on tapes.
You can record about 510 images in the SP mode and about 765 images in the LP mode on a 60-minute tape.

(1) In the standby, set PHOTO REC in to TAPE in the menu settings.
(2) Keep pressing PHOTO lightly until a still image appears.
The CAPTURE indicator appears. Recording does not start yet.
To change from the selected still image to another image, release PHOTO once and press it lightly again.
(3) Press PHOTO deeper.
The still image on the screen is recorded for about seven seconds. The sound during those seven seconds is also recorded.
The still image is displayed on the screen until recording is completed.

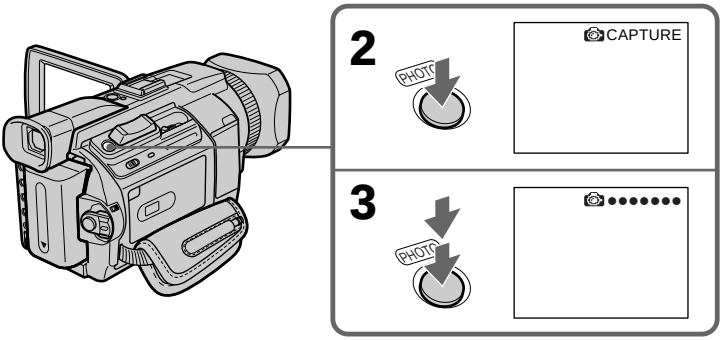

Recording images with the flash

For the details, see page 48.

Recording images with self-timer

(1) Set PHOTO REC in to TAPE in the menu settings (p. 209).
(2) Follow steps 1 and 3 on page 50.

Notes

- During tape photo recording, you cannot change the mode or setting.
- When recording a still image, do not shake your camcorder. If you do so, the image may flutter.
- You cannot use PHOTO during the following operations: (The indicator flashes on the screen.)
  – Fader
  – Digital effect
- When you record images with the flash, sound may not be recorded clearly.

If you record a moving subject with the tape photo recording

When you play back the still image on other equipment, the image may flutter. This is not a malfunction.

When you press PHOTO on the Remote Commander

Your camcorder immediately records the image that is on the screen when you press the button.

To use the tape photo recording during the tape recording

You cannot check an image on the screen by pressing PHOTO lightly. Press PHOTO deeper. The still image is then recorded for about seven seconds, and your camcorder returns to the standby.

To record clear still images with little unsteadiness

We recommend that you record on a "Memory Stick" using the Memory Photo recording.

When you record images with the flash

The allowed shooting distance is shorter than when you record on a "Memory Stick" in Memory Photo recording.

When playing back images recorded with the flash on other equipment

These images may flicker.

Using the wide mode

You can record a 16:9 wide picture to watch on a 16:9 wide-screen TV (16:9WIDE). If you connect a TV compatible with the ID-1/ID-2 system, the screen size is automatically selected.
Black bands appear on the screen during recording in 16:9WIDE mode **[a]**. The picture during playback on a normal TV **[b]** or on a wide-screen TV **[c]** is compressed in the longwise direction. If you set the screen mode of the wide-screen TV to the full mode, you can watch pictures of normal images **[d]**.

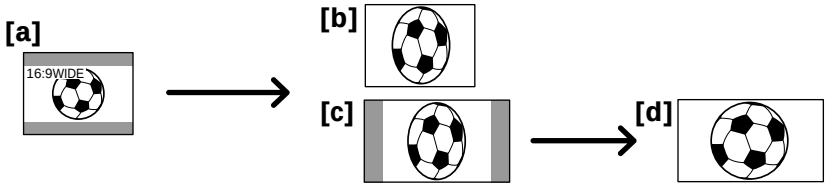

(1) In the standby, press MENU, then turn the SEL/PUSH EXEC dial to select 16:9WIDE in [C], then press the dial (p. 209).
(2) Turn the SEL/PUSH EXEC dial to select ON, then press the dial.

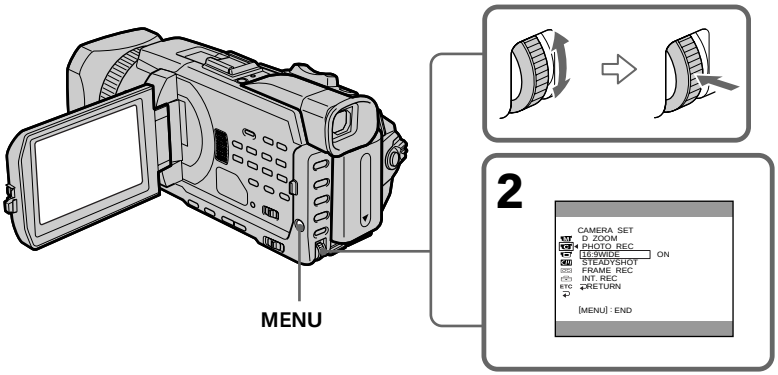

To cancel the wide mode

Set 16:9WIDE to OFF in the menu settings.

In the wide mode

You cannot select the following functions:
– Recording still images on a "Memory Stick" in the tape recording or recording standby
– BOUNCE
– OLD MOVIE

During recording

You cannot select or cancel the wide mode. When you cancel the wide mode, set your camcorder to the standby and then set 16:9WIDE to OFF in the menu settings.

Connection for a TV

Pictures recorded in the 16:9WIDE mode automatically appear on the TV screen at full size when:
– You connect your camcorder to a TV that is compatible with the video ID (ID-1/ID-2) system.
– You connect your camcorder to the S video jack on the TV.

ID-1 system

The ID-1 system sends aspect ratio (screen horizontal/vertical ratio) information (16:9, 4:3, or letter box) with video signals.

ID-2 system

The ID-2 system sends a copyright protection signal with ID-1 signals inserted between video signals when you connect your camcorder to other equipment using an A/V connecting cable.

Using the fader

You can fade in or out to give your recording a more professional appearance.

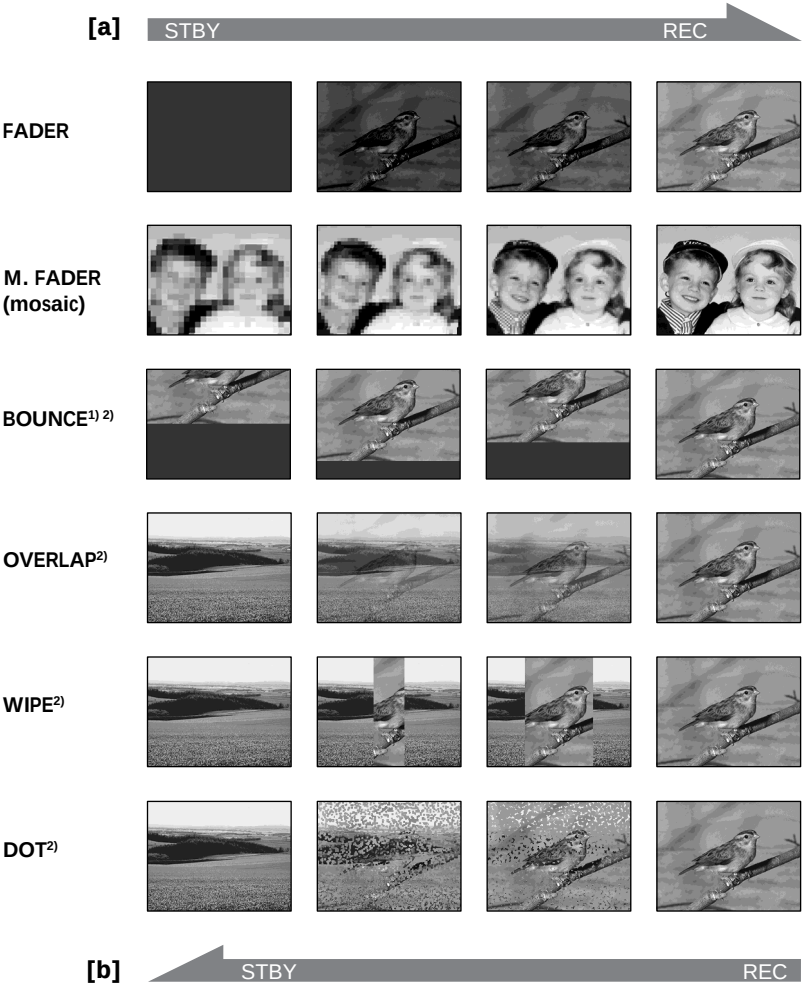

MONOTONE
When fading in, the picture gradually changes from black-and-white to color.
When fading out, the picture gradually changes from color to black-and-white.

1) You can use the bounce when D ZOOM is set to OFF in the menu settings.
2) Fade in only.

(1) When fading in [a]
In the standby, press FADER until the desired fader indicator flashes.
When fading out [b]
In the recording, press FADER until the desired fader indicator flashes.
The indicator changes as follows:

FADER → M. FADER → BOUNCE → MONOTONE → OVERLAP → WIPE → DOT → (no indicator) → FADER

The last selected fader is indicated first of all.

(2) Press START/STOP. The fader indicator stops flashing.
After fade in/out ends, your camcorder automatically returns to the normal mode.

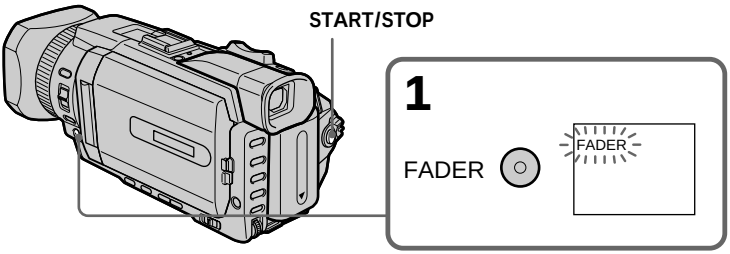

To cancel the fader

Before pressing START/STOP, press FADER until the indicator disappears.

Note

You cannot use the following functions while using the fader. Also, you cannot use the fader while using the following functions:
– Recording still images on a "Memory Stick" in the tape recording or recording standby
– Tape photo recording
– Digital effect
– Interval recording
– Frame recording

When you select OVERLAP, WIPE, or DOT

Your camcorder automatically stores the image recorded on a tape. While the image is being stored, the indicators flash fast, and the playback picture disappears. At this stage, the picture may not be recorded clearly, depending on the tape condition.

When you set the POWER switch to MEMORY/NETWORK (DCR-TRV950 only)
You cannot use the fader.

While using BOUNCE, you cannot use the following functions:
– Zoom
– Picture effect
– Shutter speed adjustment
– Exposure
– Flexible Spot meter
– Focus manually
– Spot Focus

Note on BOUNCE
The BOUNCE indicator does not appear in the following mode or functions:
– When D ZOOM is activated in the menu settings
– Wide mode
– Picture effect
– PROGRAM AE

Using special effects – Picture effect

You can digitally process images to obtain special effects like those in films or on TV.

NEG. ART [a] : The color and brightness of the picture are reversed.
SEPIA : The picture appears in sepia.
B&W : The picture appears in monochrome (black-and-white).
SOLARIZE [b] : The light intensity becomes clearer, to make the picture look more like an illustration.
SLIM [c] : The picture expands vertically.
STRETCH [d] : The picture expands horizontally.
MOSAIC [e] : The picture appears mosaic-patterned.

[a] **[b]** **[c]** **[d]** **[e]**

(1) Set the POWER switch to CAMERA. Press MENU, then select P EFFECT in M with the SEL/PUSH EXEC dial, then press the dial (p. 208).
(2) Turn the SEL/PUSH EXEC dial to select the desired mode, then press the dial.

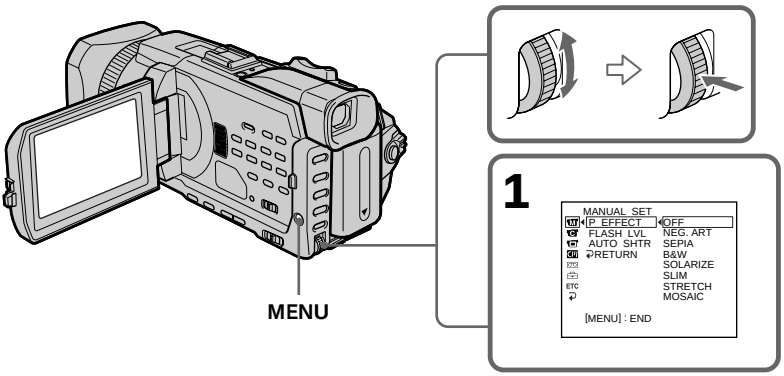

To cancel the picture effect

Set P EFFECT to OFF in the menu settings.

Note

The following functions do not work during the picture effect
– Recording still images on a "Memory Stick" in the tape recording or recording standby
– BOUNCE
– OLD MOVIE

When you set the POWER switch to OFF (CHG)

Picture effect is automatically canceled.

Using special effects – Digital effect

You can add special effects to recorded pictures using the various digital functions. Sound is recorded normally.

STILL
You can record a still image so that it is superimposed on a moving picture.

FLASH (FLASH MOTION)
You can record still images successively at constant intervals.

LUMI. (LUMINANCEKEY)
You can swap a brighter area in a still image with a moving picture.

TRAIL
You can record the picture so that an incidental image like a trail is left.

OLD MOVIE
You can add an old movie type atmosphere to pictures. Your camcorder automatically sets the wide mode to ON and picture effect to SEPIA, and sets the appropriate shutter speed.

STILL

LUMI.

(1) Press FN to display PAGE1 while the POWER switch is set to CAMERA.
(2) Press DIG EFFT. The screen to select a desired digital effect appears.
(3) Press a desired mode. In the STILL and LUMI. modes, the still image is stored in memory.
(4) Press –/+ to adjust the effect.
–: To reduce the effect
+: To increase the effect

Items to be adjusted

STILL	The rate of the still image you want to superimpose on the moving picture
FLASH	The interval of frame by frame playback
LUMI.	The color scheme of the area in the still image which is to be swapped with a moving picture
TRAIL	The vanishing time of the incidental image
OLD MOVIE	No adjustment necessary

(5) Press ↩ OK to return to PAGE1.

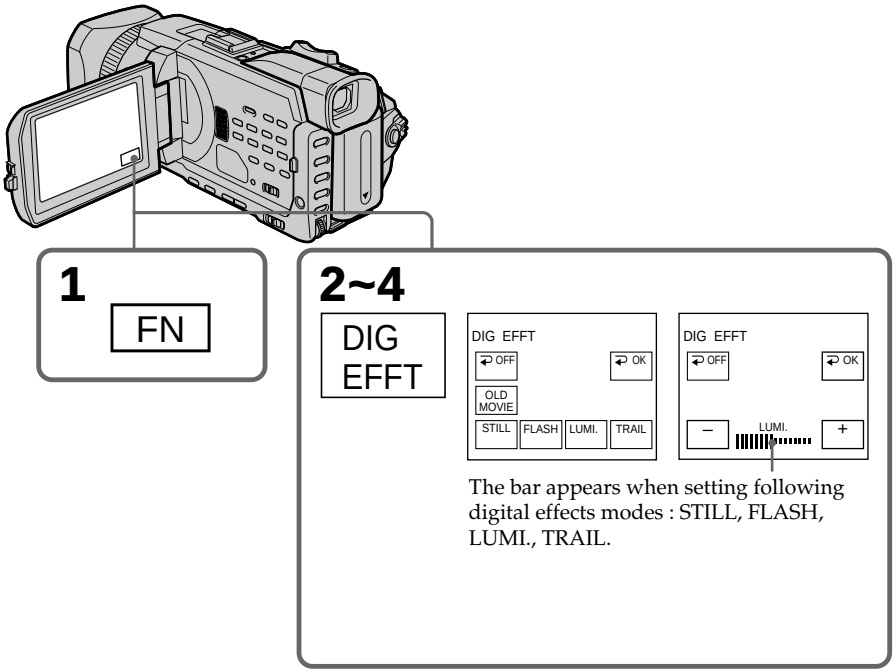

The bar appears when setting following digital effects modes : STILL, FLASH, LUMI., TRAIL.

To return to FN

Press EXIT.

To cancel the digital effect

Press ↩ OFF to return to PAGE1.

Notes

- The following functions do not work during digital effect:
  - Recording still images on a "Memory Stick" in the tape recording or recording standby
  - Tape photo recording
  - Fader
  - Shutter speed (1/30 or smaller) adjustment
- The following functions do not work in the old movie:
  - Wide mode
  - Picture effect
  - PROGRAM AE
  - Shutter speed adjustment

When you set the POWER switch to OFF (CHG)

Digital effect is automatically canceled.

Presetting the adjustment for picture quality – Custom preset

You can preset the camcorder to record the picture with the desired picture quality. When presetting, adjust the picture by shooting a subject and checking the picture displayed on a TV (p. 45).

(1) Press CUSTOM PRESET to display the CUSTOM PRESET menu while the POWER switch is set to CAMERA or MEMORY/NETWORK (DCR-TRV950 only).
(2) Press the SEL/PUSH EXEC dial.
(3) Turn the SEL/PUSH EXEC dial to select SET, then press the dial.
(4) Turn the SEL/PUSH EXEC dial to select ON, then press the dial.
(5) Turn the SEL/PUSH EXEC dial to select the desired item, then press the dial.
(6) Turn the SEL/PUSH EXEC dial to adjust the selected item, then press the dial.
(7) Press CUSTOM PRESET.
The CUSTOM PRESET menu disappears and the indicator CP appears on the screen.

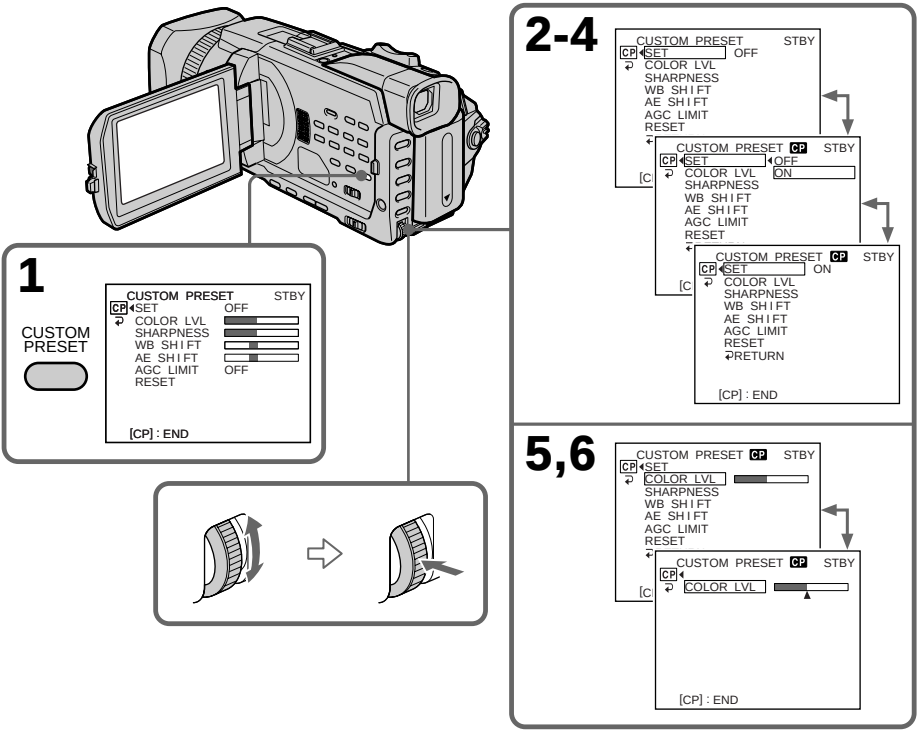

Items to be adjusted

Item	Meaning	Adjustment value
COLOR LVL	Color intensity	Decreases color intensity ↔ Increases color intensity
SHARPNESS	Sharpness	Softer ↔ Sharper
WB SHIFT	White balance	Bluish ↔ Reddish
AE SHIFT	Brightness	Dim ↔ Brighten
AGC LIMIT	Auto Gain-limit	6 dB/12 dB/OFF
RESET	Sets items above to the default settings.	

To cancel using the custom preset

Select OFF in step 4. The setting is still maintained at this moment. To return to the standard setting, select RESET in step 6.

To check the custom preset setting

Press CUSTOM PRESET while the POWER switch is set to CAMERA or MEMORY/NETWORK (DCR-TRV950 only).
The custom preset setting appears on the screen.

When you preset the desired picture quality in CAMERA or MEMORY/NETWORK (DCR-TRV950 only)

The preset is only available in each mode you preset. If you want to use a preset both in CAMERA and MEMORY/NETWORK (DCR-TRV950 only), you have to preset in each mode.

About the AGC Limit

When adjusting the exposure manually, the level of the gain is up to 18 dB (OFF).

Using the guide frame

You can easily make the picture be on a horizontal line using the guide frame. The guide frame is not recorded in the tape or the "Memory Stick."

(1) Set GUIDE FRAME in to ON in the menu setting while the POWER switch is set to CAMERA or MEMORY/NETWORK (DCR-TRV950 only). (p210)

(2) Press MENU to erase the menu display. The guide frame is displayed on the screen.

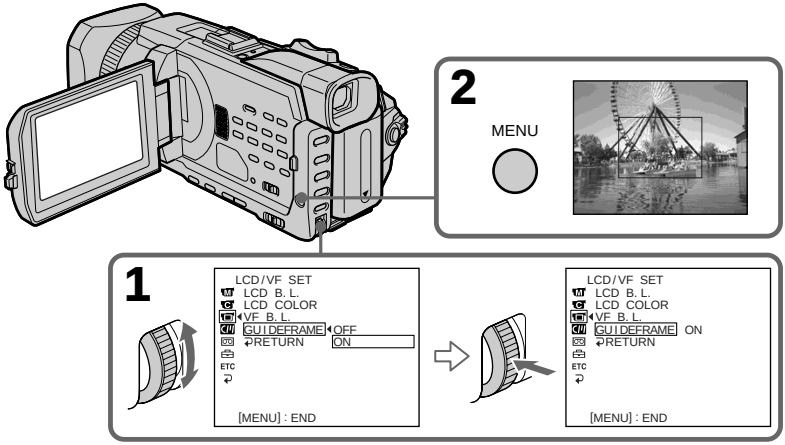

To clear the guide frame

Select GUIDE FRAME to OFF in the menu setting or simply press DISPLAY/TOUCH PANEL.

Note

The guide frame indicates only a rough level. The size and position of the guide frame do not affect the setting of the camcorder.

If you set GUIDEFRAME to ON

The other indicators are also displayed on the screen.