APPENDIX 1 : Photographs of test setup

Left Front

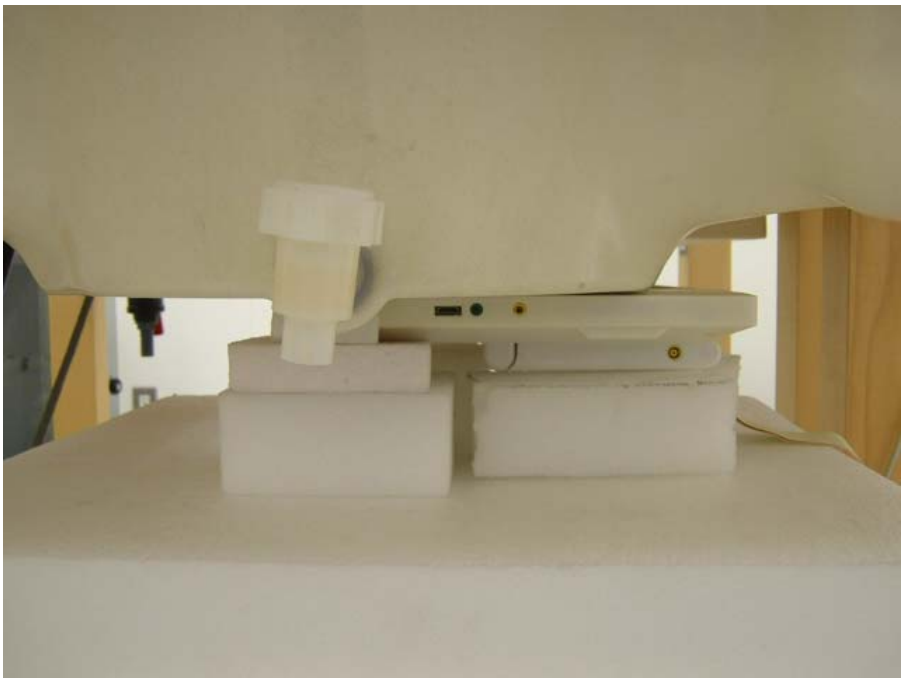

Left Side

Left Back

Left Top

Right Front

Right side

Right Back

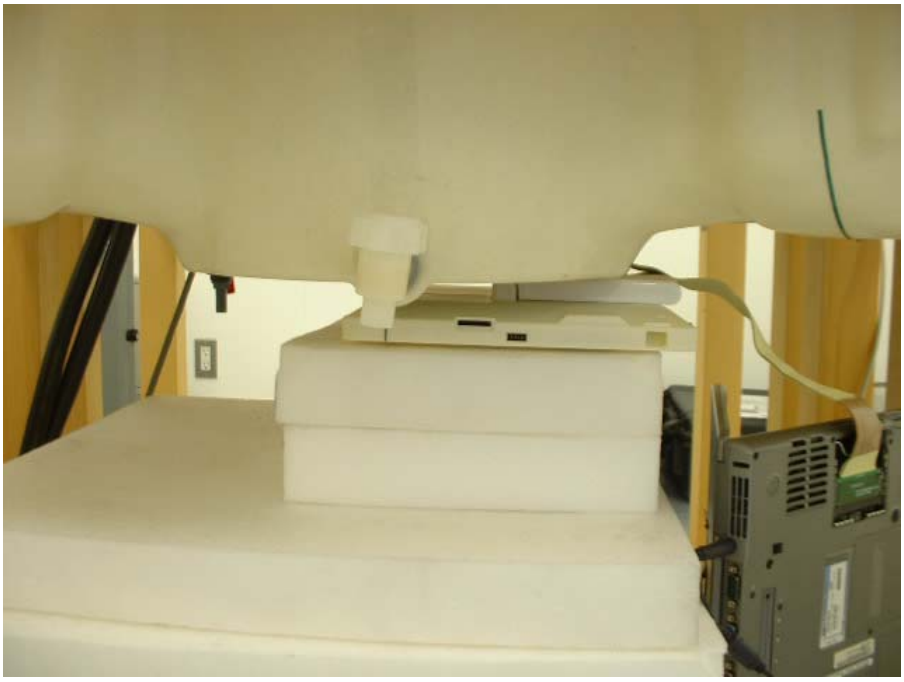

Right Top

Left Front Separation 5mm

Left Front Separation 10mm

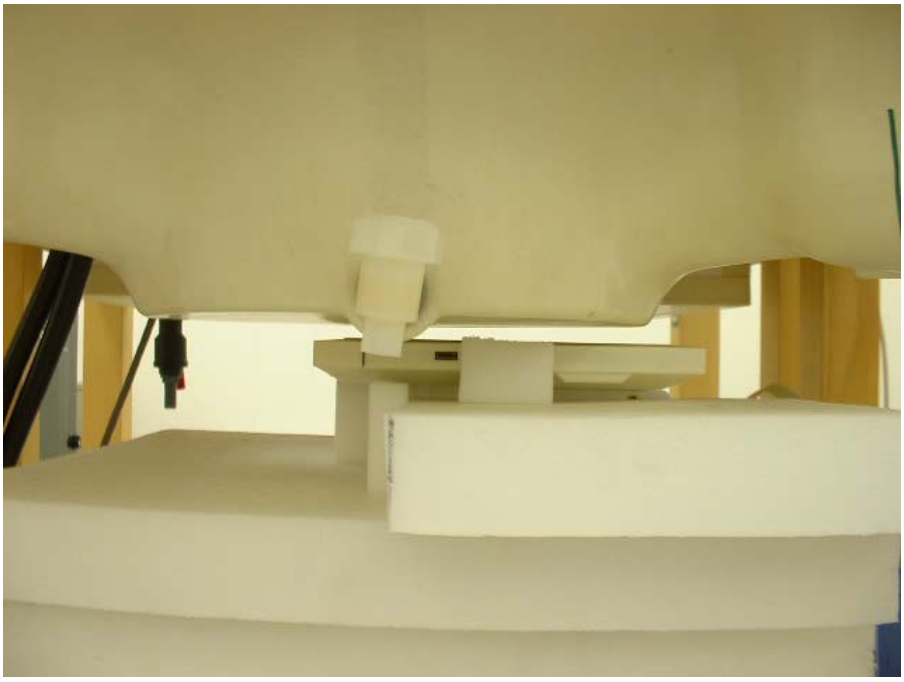

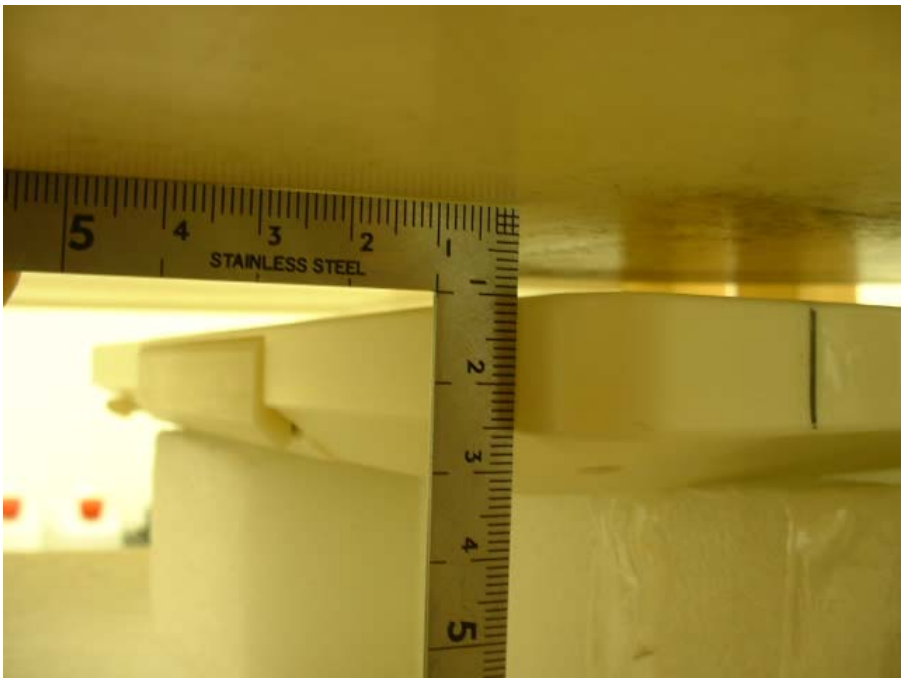

APPENDIX 2 : SAR Measurement data

IRF303JU / Body / Left Front ANT.1 / 5260MHz / BPSK(6Mbps)

Duty Cycle: 1:1
Medium parameters used: f = 5200 MHz; σ = 5.41 mho/m; ε_r = 46.8; ρ = 1000 kg/m^3
Phantom section: Flat Section
Measurement Standard: DASY4 (High Precision Assessment)

DASY4 Configuration:
Probe: EX3DV3 - SN3507; ConvF(4.86, 4.86, 4.86); Calibrated: 2005/04/12
Sensor-Surface: 2mm (Mechanical Surface Detection)
Electronics: DAE3 Sn516; Calibrated: 2005/03/10
Phantom: SAM 1196
Measurement SW: DASY4, V4.5 Build 19; Postprocessing SW: SEMCAD, V1.8 Build 145

Area Scan (51x81x1): Measurement grid: dx=10mm, dy=10mm
Maximum value of SAR (interpolated) = 0.451 mW/g

Zoom Scan (7x7x8)/Cube 0: Measurement grid: dx=4.3mm, dy=4.3mm, dz=3mm
Reference Value = 7.31 V/m; Power Drift = -0.263 dB
Peak SAR (extrapolated) = 0.688 W/kg

SAR(1 g) = 0.216 mW/g; SAR(10 g) = 0.076 mW/g
Maximum value of SAR (measured) = 0.393 mW/g

Test Date = 06/15/05
Ambient Temperature = 25.0 degree.C.
Liquid Temperature = Before 24.0 degree.C. , After 24.0 degree.C.

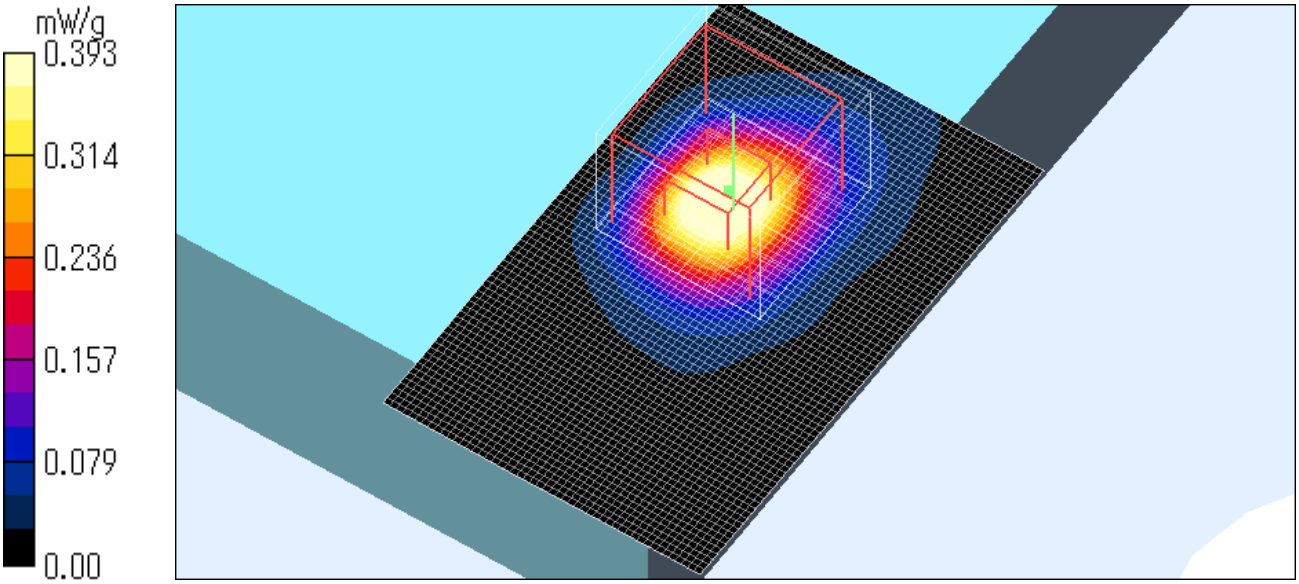

IRF303JU / Body / Left Front ANT.1 / 5260MHz / QPSK(12Mbps)

Duty Cycle: 1:1
Medium parameters used: f = 5200 MHz; σ = 5.41 mho/m; ε_r = 46.8; ρ = 1000 kg/m^3
Phantom section: Flat Section
Measurement Standard: DASY4 (High Precision Assessment)

DASY4 Configuration:
Probe: EX3DV3 - SN3507; ConvF(4.86, 4.86, 4.86); Calibrated: 2005/04/12
Sensor-Surface: 2mm (Mechanical Surface Detection)
Electronics: DAE3 Sn516; Calibrated: 2005/03/10
Phantom: SAM 1196
Measurement SW: DASY4, V4.5 Build 19; Postprocessing SW: SEMCAD, V1.8 Build 145

Area Scan (51x81x1): Measurement grid: dx=10mm, dy=10mm
Maximum value of SAR (interpolated) = 0.735 mW/g

Zoom Scan (7x7x8)/Cube 0: Measurement grid: dx=4.3mm, dy=4.3mm, dz=3mm
Reference Value = 6.67 V/m; Power Drift = -0.147 dB
Peak SAR (extrapolated) = 1.15 W/kg

SAR(1 g) = 0.356 mW/g; SAR(10 g) = 0.124 mW/g
Maximum value of SAR (measured) = 0.673 mW/g

Test Date = 06/15/05
Ambient Temperature = 25.0 degree.C.
Liquid Temperature = Before 24.0 degree.C. , After 24.0 degree.C.

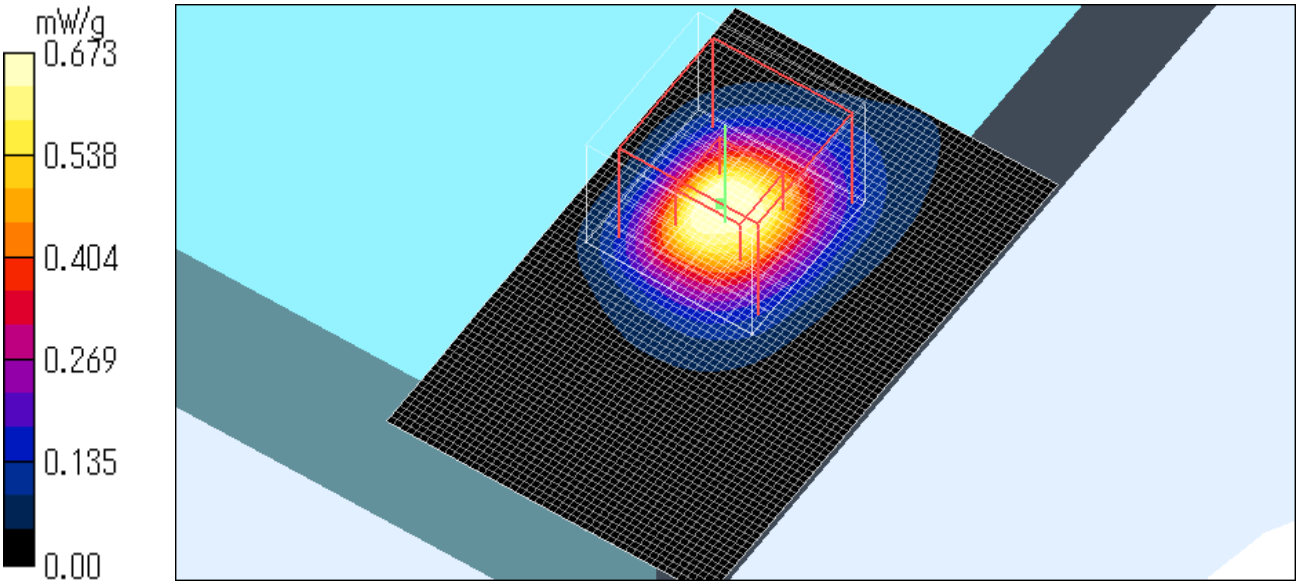

IRF303JU / Body / Left Front ANT.1 / 5260MHz / 16QAM(24Mbps)

Duty Cycle: 1:1
Medium parameters used: f = 5200 MHz; σ = 5.41 mho/m; ε_r = 46.8; ρ = 1000 kg/m^3
Phantom section: Flat Section
Measurement Standard: DASY4 (High Precision Assessment)

DASY4 Configuration:
Probe: EX3DV3 - SN3507; ConvF(4.86, 4.86, 4.86); Calibrated: 2005/04/12
Sensor-Surface: 2mm (Mechanical Surface Detection)
Electronics: DAE3 Sn516; Calibrated: 2005/03/10
Phantom: SAM 1196
Measurement SW: DASY4, V4.5 Build 19; Postprocessing SW: SEMCAD, V1.8 Build 145

Area Scan (51x81x1): Measurement grid: dx=10mm, dy=10mm
Maximum value of SAR (interpolated) = 0.540 mW/g

Zoom Scan (7x7x8)/Cube 0: Measurement grid: dx=4.3mm, dy=4.3mm, dz=3mm
Reference Value = 6.27 V/m; Power Drift = -0.286 dB
Peak SAR (extrapolated) = 0.824 W/kg

SAR(1 g) = 0.257 mW/g; SAR(10 g) = 0.090 mW/g
Maximum value of SAR (measured) = 0.485 mW/g

Test Date = 06/15/05
Ambient Temperature = 25.0 degree.C.
Liquid Temperature = Before 24.1 degree.C. , After 24.2 degree.C.

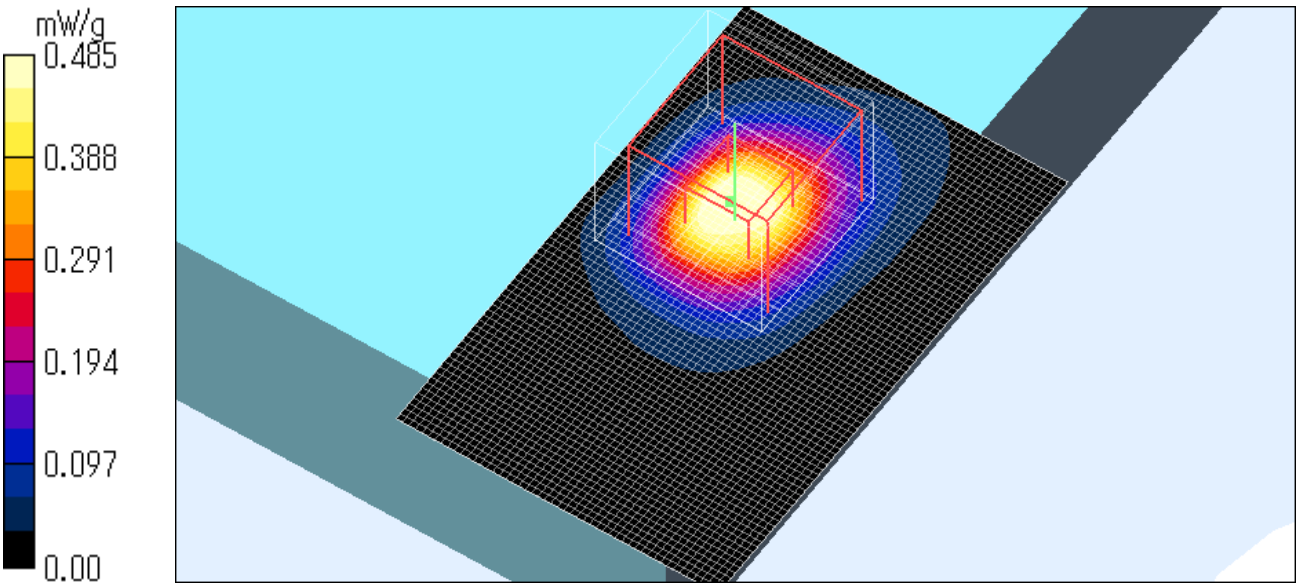

IRF303JU / Body / Left Front ANT.1 / 5260MHz / 64QAM(54Mbps)

Duty Cycle: 1:1
Medium parameters used: f = 5200 MHz; σ = 5.41 mho/m; ε_r = 46.8; ρ = 1000 kg/m^3
Phantom section: Flat Section
Measurement Standard: DASY4 (High Precision Assessment)

DASY4 Configuration:
Probe: EX3DV3 - SN3507; ConvF(4.86, 4.86, 4.86); Calibrated: 2005/04/12
Sensor-Surface: 2mm (Mechanical Surface Detection)
Electronics: DAE3 Sn516; Calibrated: 2005/03/10
Phantom: SAM 1196
Measurement SW: DASY4, V4.5 Build 19; Postprocessing SW: SEMCAD, V1.8 Build 145

Area Scan (51x81x1): Measurement grid: dx=10mm, dy=10mm
Maximum value of SAR (interpolated) = 0.713 mW/g

Zoom Scan (7x7x8)/Cube 0: Measurement grid: dx=4.3mm, dy=4.3mm, dz=3mm
Reference Value = 6.58 V/m; Power Drift = -0.145 dB
Peak SAR (extrapolated) = 1.08 W/kg

SAR(1 g) = 0.336 mW/g; SAR(10 g) = 0.117 mW/g
Maximum value of SAR (measured) = 0.635 mW/g

Test Date = 06/15/05
Ambient Temperature = 25.0 degree.C.
Liquid Temperature = Before 24.2 degree.C. , After 24.3 degree.C.

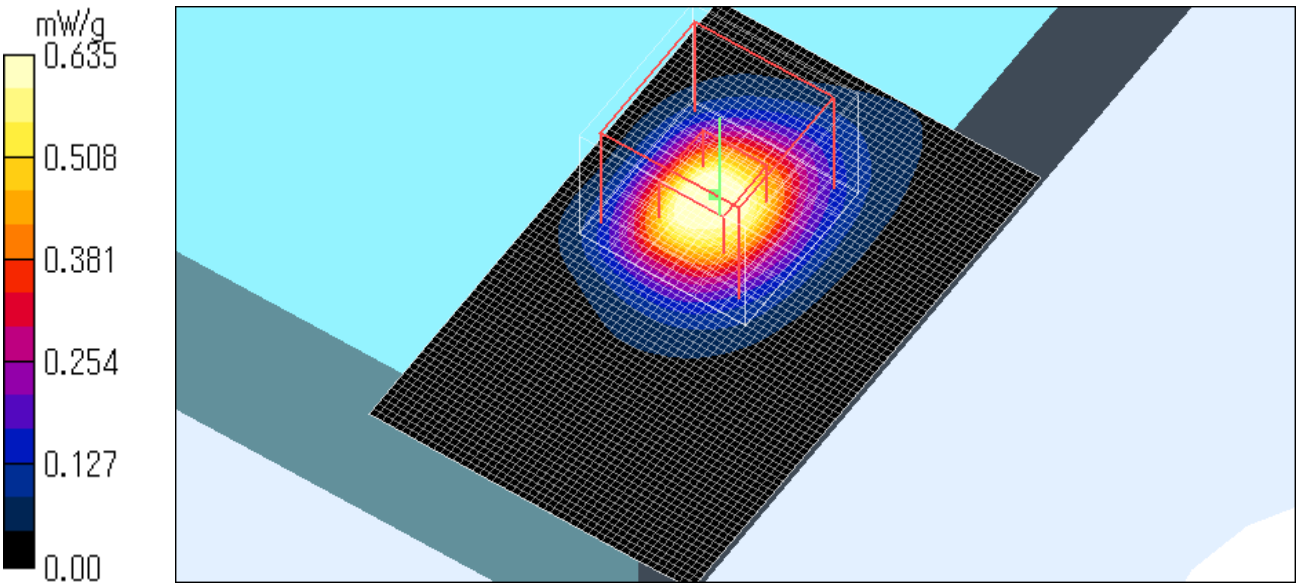

IRF303JU / Body / ANT.1 Left Side / 5260MHz / QPSK(12Mbps)

Duty Cycle: 1:1
Medium parameters used: f = 5200 MHz; σ = 5.41 mho/m; ε_r = 46.8; ρ = 1000 kg/m^3
Phantom section: Flat Section
Measurement Standard: DASY4 (High Precision Assessment)

DASY4 Configuration:
Probe: EX3DV3 - SN3507; ConvF(4.86, 4.86, 4.86); Calibrated: 2005/04/12
Sensor-Surface: 2mm (Mechanical Surface Detection)
Electronics: DAE3 Sn516; Calibrated: 2005/03/10
Phantom: SAM 1196
Measurement SW: DASY4, V4.5 Build 19; Postprocessing SW: SEMCAD, V1.8 Build 145

Area Scan (51x81x1): Measurement grid: dx=10mm, dy=10mm
Maximum value of SAR (interpolated) = 0.188 mW/g

Zoom Scan (7x7x8)/Cube 0: Measurement grid: dx=4.3mm, dy=4.3mm, dz=3mm
Reference Value = 4.84 V/m; Power Drift = -0.270 dB
Peak SAR (extrapolated) = 0.311 W/kg

SAR(1 g) = 0.094 mW/g; SAR(10 g) = 0.034 mW/g
Maximum value of SAR (measured) = 0.174 mW/g

Test Date = 06/15/05
Ambient Temperature = 25.0 degree.C.
Liquid Temperature = Before 24.2 degree.C. , After 24.3 degree.C.

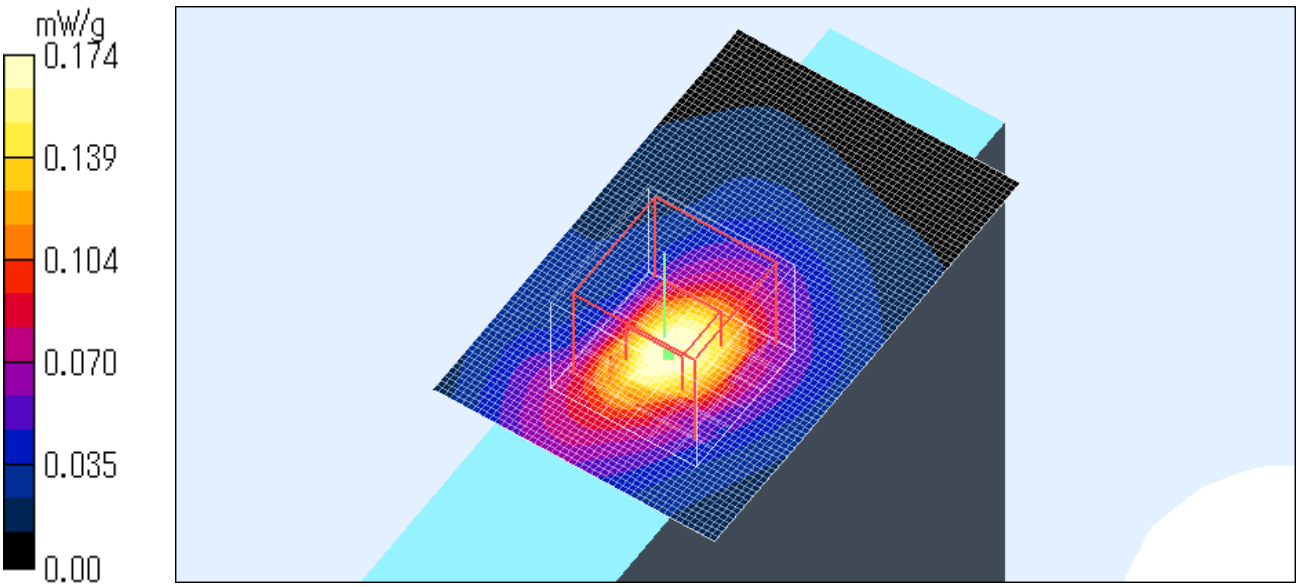

IRF303JU / Body / ANT.1 Left Back / 5260MHz / QPSK(12Mbps)

Duty Cycle: 1:1
Medium parameters used: f = 5200 MHz; σ = 5.41 mho/m; ε_r = 46.8; ρ = 1000 kg/m^3
Phantom section: Flat Section
Measurement Standard: DASY4 (High Precision Assessment)

DASY4 Configuration:
Probe: EX3DV3 - SN3507; ConvF(4.86, 4.86, 4.86); Calibrated: 2005/04/12
Sensor-Surface: 2mm (Mechanical Surface Detection)
Electronics: DAE3 Sn516; Calibrated: 2005/03/10
Phantom: SAM 1196
Measurement SW: DASY4, V4.5 Build 19; Postprocessing SW: SEMCAD, V1.8 Build 145

Area Scan (81x101x1): Measurement grid: dx=10mm, dy=10mm
Maximum value of SAR (interpolated) = 0.068 mW/g

Zoom Scan (7x7x8)/Cube 0: Measurement grid: dx=4.3mm, dy=4.3mm, dz=3mm
Reference Value = 3.53 V/m; Power Drift = -0.220 dB
Peak SAR (extrapolated) = 0.114 W/kg

SAR(1 g) = 0.038 mW/g; SAR(10 g) = 0.018 mW/g
Maximum value of SAR (measured) = 0.066 mW/g

Test Date = 06/15/05
Ambient Temperature = 25.0 degree.C.
Liquid Temperature = Before 24.6 degree.C. , After 24.6 degree.C.

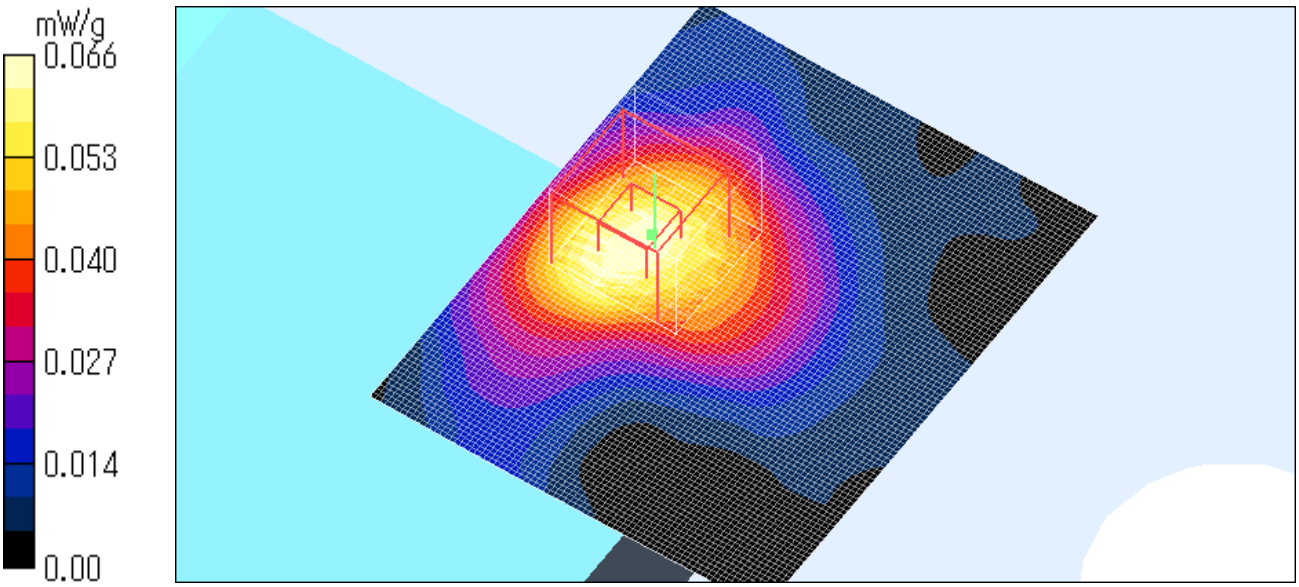

IRF303JU / Body / ANT.1 Left Top / 5260MHz / QPSK(12Mbps)

Duty Cycle: 1:1
Medium parameters used: f = 5200 MHz; σ = 5.41 mho/m; ε_r = 46.8; ρ = 1000 kg/m^3
Phantom section: Flat Section
Measurement Standard: DASY4 (High Precision Assessment)

DASY4 Configuration:
Probe: EX3DV3 - SN3507; ConvF(4.86, 4.86, 4.86); Calibrated: 2005/04/12
Sensor-Surface: 2mm (Mechanical Surface Detection)
Electronics: DAE3 Sn516; Calibrated: 2005/03/10
Phantom: SAM 1196
Measurement SW: DASY4, V4.5 Build 19; Postprocessing SW: SEMCAD, V1.8 Build 145

Area Scan (51x81x1): Measurement grid: dx=10mm, dy=10mm
Maximum value of SAR (interpolated) = 0.023 mW/g

Zoom Scan (7x7x8)/Cube 0: Measurement grid: dx=4.3mm, dy=4.3mm, dz=3mm
Reference Value = 2.02 V/m; Power Drift = -0.261 dB
Peak SAR (extrapolated) = 0.067 W/kg

SAR(1 g) = 0.012 mW/g; SAR(10 g) = 0.006 mW/g
Maximum value of SAR (measured) = 0.021 mW/g

Test Date = 06/15/05
Ambient Temperature = 25.0 degree.C.
Liquid Temperature = Before 24.3 degree.C. , After 24.2 degree.C.

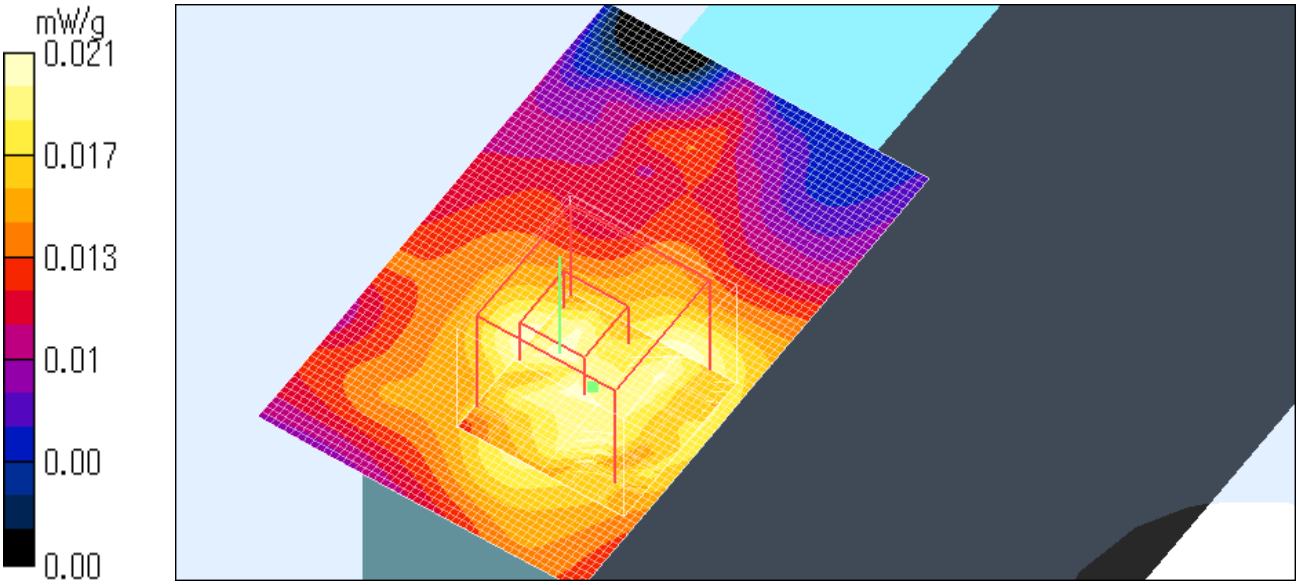

IRF303JU / Body / ANT.1 Left Front / 5180MHz / QPSK(12Mbps)

Duty Cycle: 1:1
Medium parameters used: f = 5200 MHz; σ = 5.41 mho/m; ε_r = 46.8; ρ = 1000 kg/m^3
Phantom section: Flat Section
Measurement Standard: DASY4 (High Precision Assessment)

DASY4 Configuration:
Probe: EX3DV3 - SN3507; ConvF(4.86, 4.86, 4.86); Calibrated: 2005/04/12
Sensor-Surface: 2mm (Mechanical Surface Detection)
Electronics: DAE3 Sn516; Calibrated: 2005/03/10
Phantom: SAM 1196
Measurement SW: DASY4, V4.5 Build 19; Postprocessing SW: SEMCAD, V1.8 Build 145

Area Scan (51x81x1): Measurement grid: dx=10mm, dy=10mm
Maximum value of SAR (interpolated) = 0.441 mW/g

Zoom Scan (7x7x8)/Cube 0: Measurement grid: dx=4.3mm, dy=4.3mm, dz=3mm
Reference Value = 3.59 V/m; Power Drift = -0.294 dB
Peak SAR (extrapolated) = 0.680 W/kg

SAR(1 g) = 0.222 mW/g; SAR(10 g) = 0.080 mW/g
Maximum value of SAR (measured) = 0.405 mW/g
Test Date = 06/15/05
Ambient Temperature = 25.0 degree.C.
Liquid Temperature = Before 24.2 degree.C. , After 24.3 degree.C.

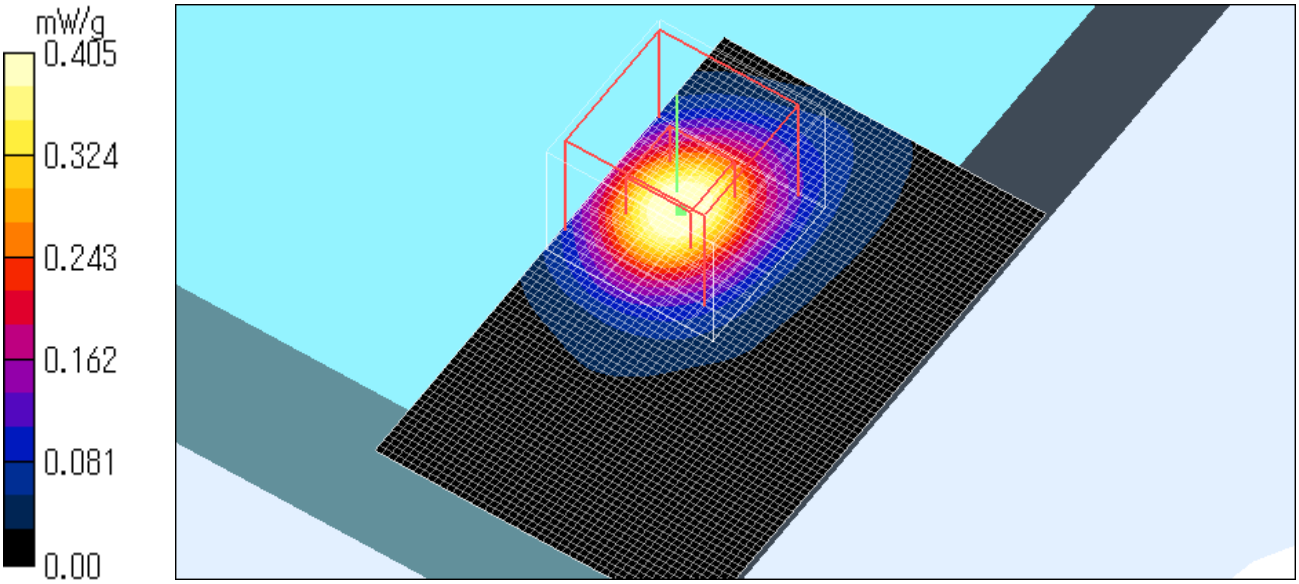

IRF303JU / Body / ANT.1 Left Front / 5320MHz / QPSK(12Mbps)

Duty Cycle: 1:1
Medium parameters used: f = 5200 MHz; σ = 5.41 mho/m; ε_r = 46.8; ρ = 1000 kg/m^3
Phantom section: Flat Section
Measurement Standard: DASY4 (High Precision Assessment)

DASY4 Configuration:
Probe: EX3DV3 - SN3507; ConvF(4.86, 4.86, 4.86); Calibrated: 2005/04/12
Sensor-Surface: 2mm (Mechanical Surface Detection)
Electronics: DAE3 Sn516; Calibrated: 2005/03/10
Phantom: SAM 1196
Measurement SW: DASY4, V4.5 Build 19; Postprocessing SW: SEMCAD, V1.8 Build 145

Area Scan (51x81x1): Measurement grid: dx=10mm, dy=10mm
Maximum value of SAR (interpolated) = 0.922 mW/g

Zoom Scan (7x7x8)/Cube 0: Measurement grid: dx=4.3mm, dy=4.3mm, dz=3mm
Reference Value = 6.34 V/m; Power Drift = -0.229 dB
Peak SAR (extrapolated) = 1.40 W/kg

SAR(1 g) = 0.445 mW/g; SAR(10 g) = 0.156 mW/g
Maximum value of SAR (measured) = 0.805 mW/g

Test Date = 06/15/05
Ambient Temperature = 25.0 degree.C.
Liquid Temperature = Before 24.3 degree.C. , After 24.4 degree.C.

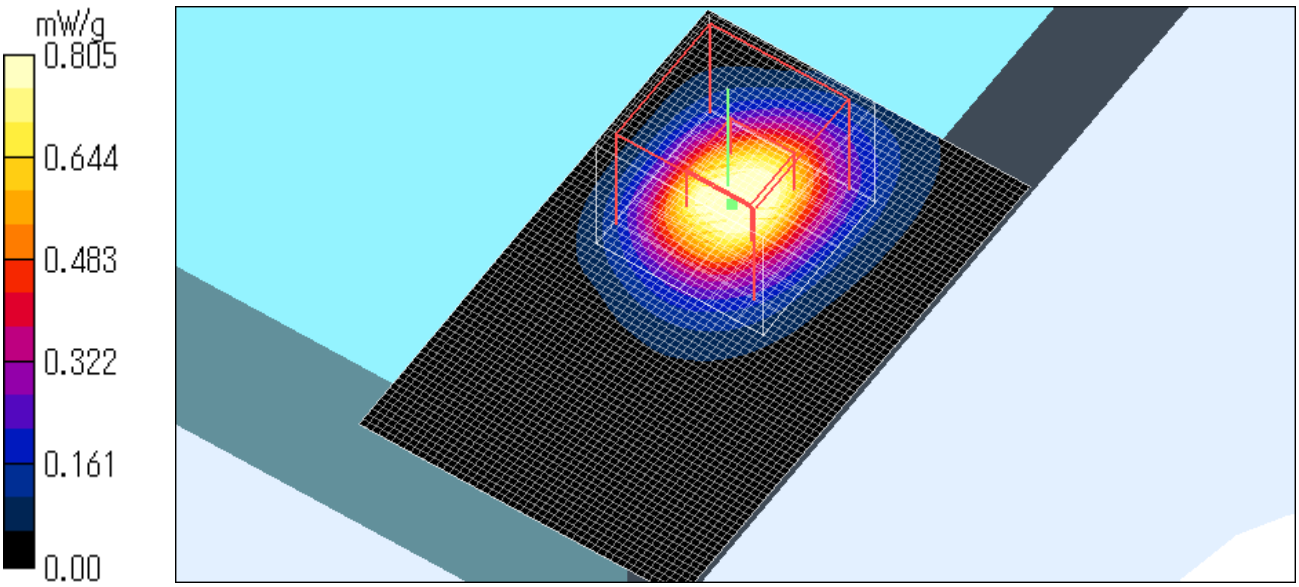

Z-axis at maximum SAR location

IRF303JU / Body / ANT.1 Left Front / 5320MHz / QPSK (12Mbps)

Duty Cycle: 1:1
Medium parameters used: f = 5200 MHz; σ = 5.41 mho/m; ε_r = 46.8; ρ = 1000 kg/m^3
Phantom section: Flat Section
Measurement Standard: DASY4 (High Precision Assessment)

DASY4 Configuration:
Probe: EX3DV3 - SN3507; ConvF(4.86, 4.86, 4.86); Calibrated: 2005/04/12
Sensor-Surface: 2mm (Mechanical Surface Detection)
Electronics: DAE3 Sn516; Calibrated: 2005/03/10
Phantom: SAM 1196
Measurement SW: DASY4, V4.5 Build 19; Postprocessing SW: SEMCAD, V1.8 Build 145

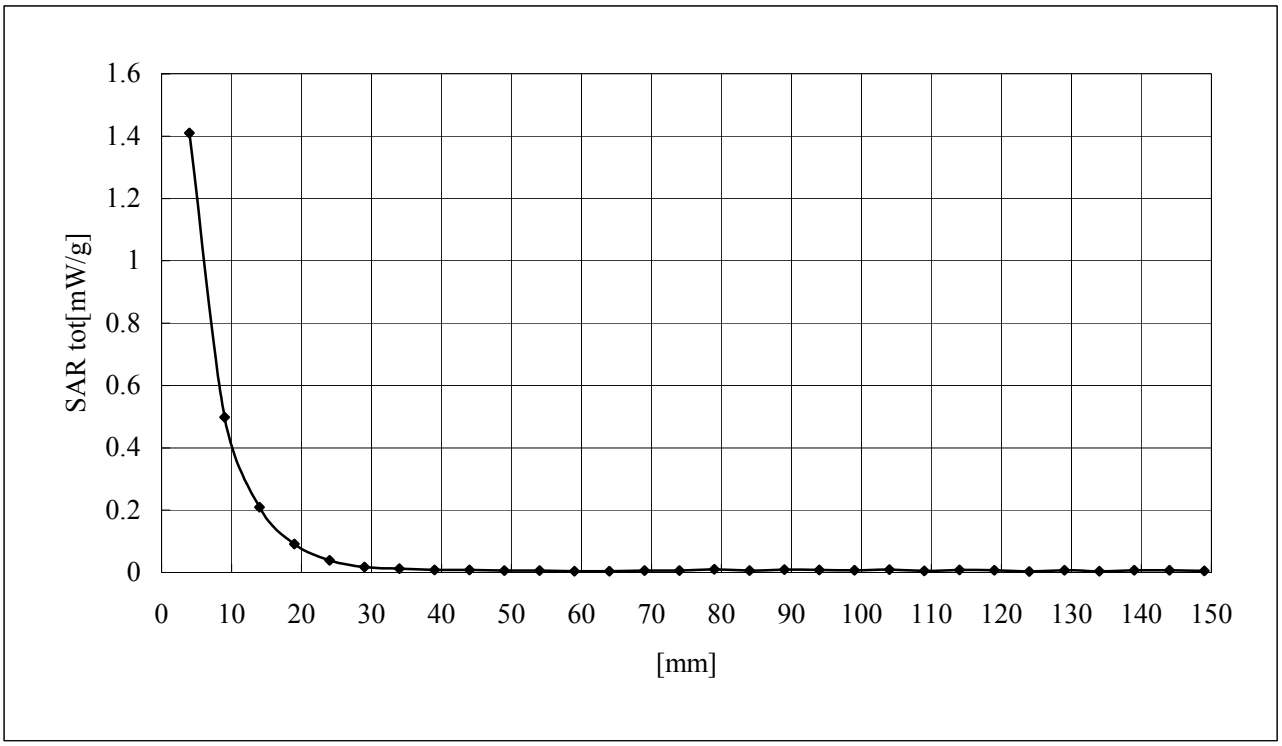

IRF303JU / Body / ANT.2 Right Front / 5260MHz / BPSK(6Mbps)

Duty Cycle: 1:1
Medium parameters used: f = 5200 MHz; σ = 5.32 mho/m; ε_r = 46.8; ρ = 1000 kg/m^3
Phantom section: Flat Section
Measurement Standard: DASY4 (High Precision Assessment)

DASY4 Configuration:
Probe: EX3DV3 - SN3507; ConvF(4.86, 4.86, 4.86); Calibrated: 2005/04/12
Sensor-Surface: 2mm (Mechanical Surface Detection)
Electronics: DAE3 Sn516; Calibrated: 2005/03/10
Phantom: SAM 1196
Measurement SW: DASY4, V4.5 Build 19; Postprocessing SW: SEMCAD, V1.8 Build 145

Area Scan (61x101x1): Measurement grid: dx=10mm, dy=10mm
Maximum value of SAR (interpolated) = 0.329 mW/g

Zoom Scan (7x7x8)/Cube 0: Measurement grid: dx=4.3mm, dy=4.3mm, dz=3mm
Reference Value = 4.35 V/m; Power Drift = -0.205 dB
Peak SAR (extrapolated) = 0.488 W/kg

SAR(1 g) = 0.155 mW/g; SAR(10 g) = 0.057 mW/g
Maximum value of SAR (measured) = 0.276 mW/g

Test Date = 06/16/05
Ambient Temperature = 25.0 degree.C.
Liquid Temperature = Before 24.9 degree.C. , After 24.9 degree.C.

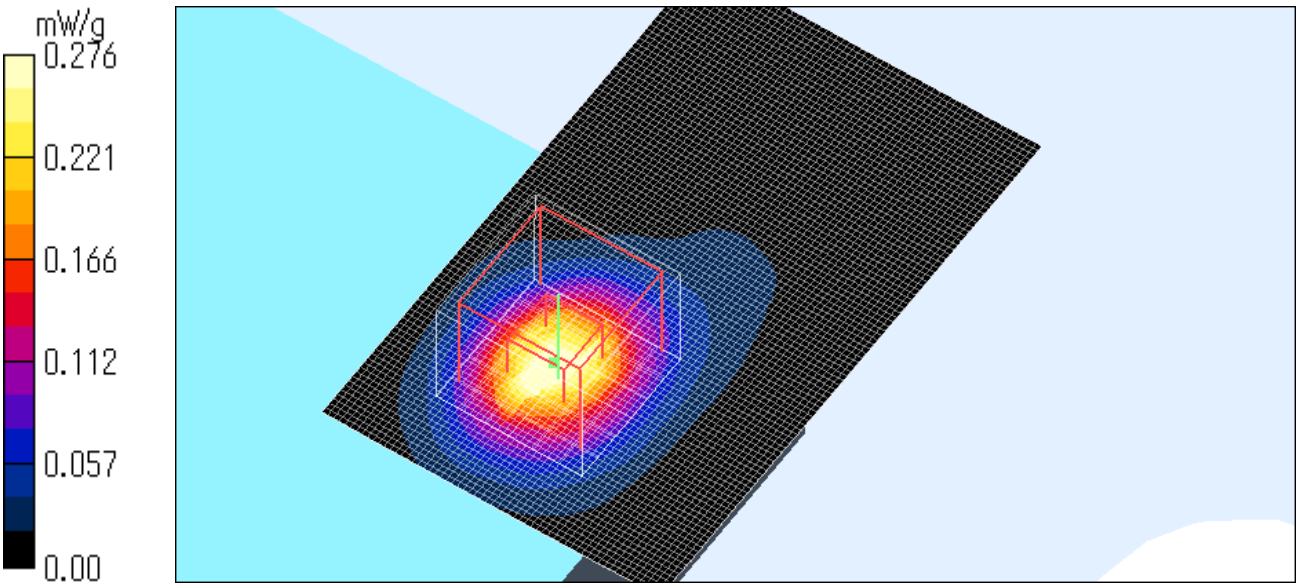

IRF303JU / Body / ANT.2 Right Front / 5260MHz / QPSK(12Mbps)

Duty Cycle: 1:1
Medium parameters used: f = 5200 MHz; σ = 5.32 mho/m; ε_r = 46.8; ρ = 1000 kg/m^3
Phantom section: Flat Section
Measurement Standard: DASY4 (High Precision Assessment)

DASY4 Configuration:
Probe: EX3DV3 - SN3507; ConvF(4.86, 4.86, 4.86); Calibrated: 2005/04/12
Sensor-Surface: 2mm (Mechanical Surface Detection)
Electronics: DAE3 Sn516; Calibrated: 2005/03/10
Phantom: SAM 1196
Measurement SW: DASY4, V4.5 Build 19; Postprocessing SW: SEMCAD, V1.8 Build 145

Area Scan (61x101x1): Measurement grid: dx=10mm, dy=10mm
Maximum value of SAR (interpolated) = 0.475 mW/g

Zoom Scan (7x7x8)/Cube 0: Measurement grid: dx=4.3mm, dy=4.3mm, dz=3mm
Reference Value = 9.53 V/m; Power Drift = -0.140 dB
Peak SAR (extrapolated) = 0.786 W/kg

SAR(1 g) = 0.244 mW/g; SAR(10 g) = 0.089 mW/g
Maximum value of SAR (measured) = 0.451 mW/g

Test Date = 06/16/05
Ambient Temperature = 25.0 degree.C.
Liquid Temperature = Before 24.9 degree.C. , After 24.9 degree.C.

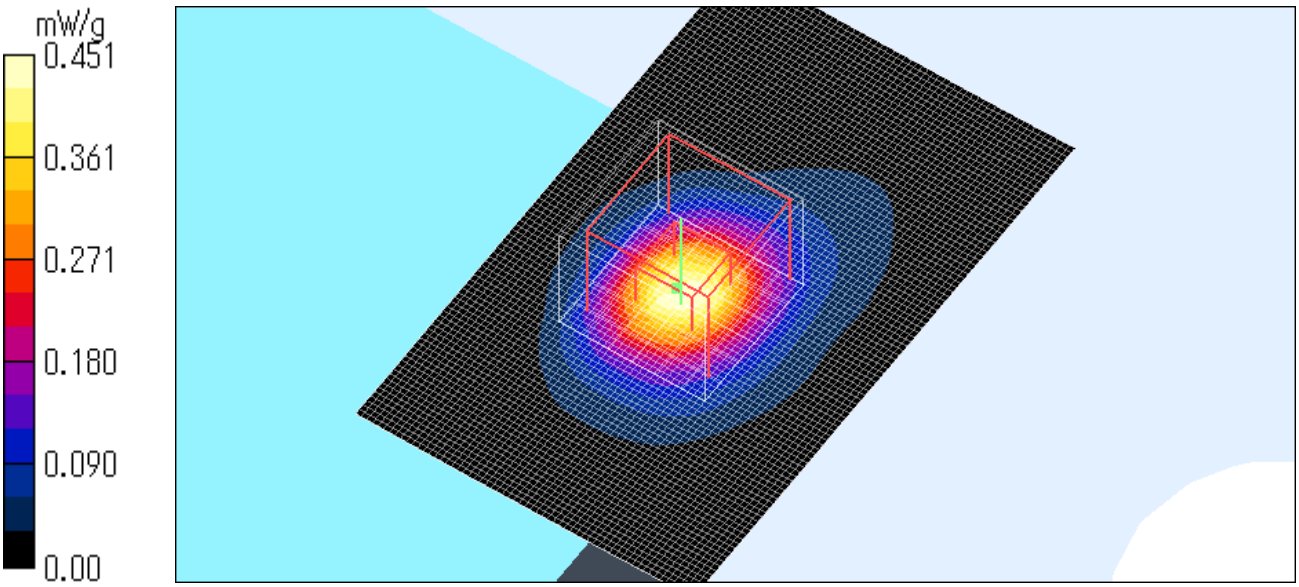

IRF303JU / Body / ANT.2 Right Front / 5260MHz / 16QAM(36Mbps)

Duty Cycle: 1:1
Medium parameters used: f = 5200 MHz; σ = 5.32 mho/m; ε_r = 46.8; ρ = 1000 kg/m^3
Phantom section: Flat Section
Measurement Standard: DASY4 (High Precision Assessment)

DASY4 Configuration:
Probe: EX3DV3 - SN3507; ConvF(4.86, 4.86, 4.86); Calibrated: 2005/04/12
Sensor-Surface: 2mm (Mechanical Surface Detection)
Electronics: DAE3 Sn516; Calibrated: 2005/03/10
Phantom: SAM 1196
Measurement SW: DASY4, V4.5 Build 19; Postprocessing SW: SEMCAD, V1.8 Build 145

Area Scan (61x91x1): Measurement grid: dx=10mm, dy=10mm
Maximum value of SAR (interpolated) = 0.469 mW/g

Zoom Scan (7x7x8)/Cube 0: Measurement grid: dx=4.3mm, dy=4.3mm, dz=3mm
Reference Value = 9.37 V/m; Power Drift = -0.052 dB
Peak SAR (extrapolated) = 0.737 W/kg

SAR(1 g) = 0.237 mW/g; SAR(10 g) = 0.087 mW/g
Maximum value of SAR (measured) = 0.427 mW/g

Test Date = 06/16/05
Ambient Temperature = 25.0 degree.C.
Liquid Temperature = Before 24.9 degree.C. , After 24.8 degree.C.

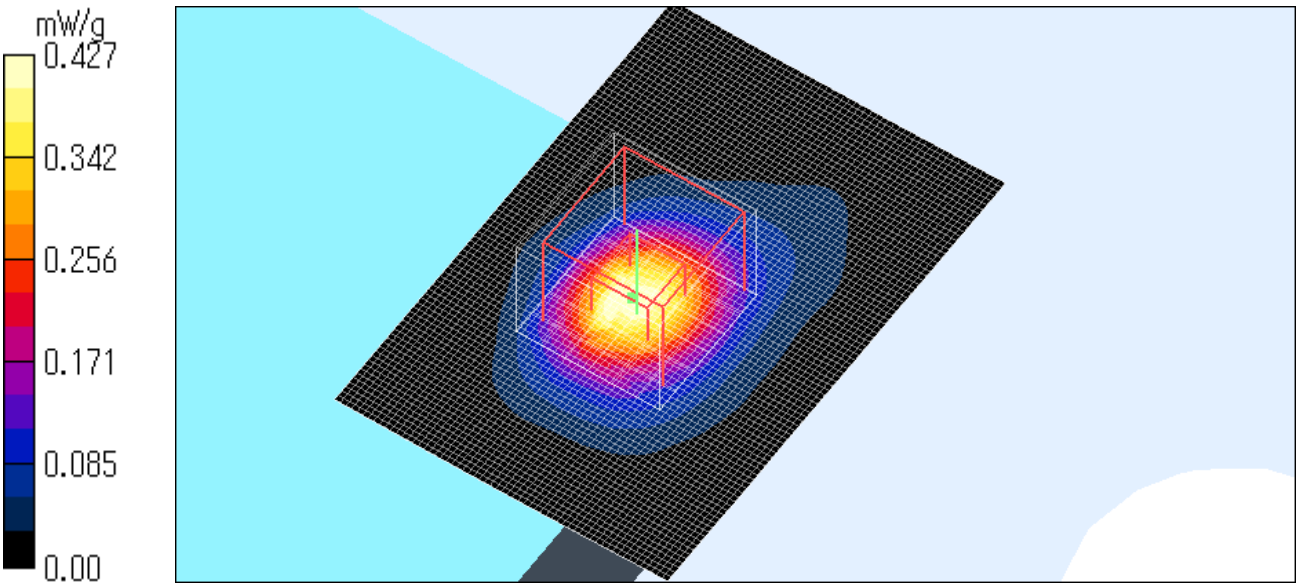

IRF303JU / Body / ANT.2 Right Front / 5260MHz / 64QAM(54Mbps)

Duty Cycle: 1:1
Medium parameters used: f = 5200 MHz; σ = 5.32 mho/m; ε_r = 46.8; ρ = 1000 kg/m^3
Phantom section: Flat Section
Measurement Standard: DASY4 (High Precision Assessment)

DASY4 Configuration:
Probe: EX3DV3 - SN3507; ConvF(4.86, 4.86, 4.86); Calibrated: 2005/04/12
Sensor-Surface: 2mm (Mechanical Surface Detection)
Electronics: DAE3 Sn516; Calibrated: 2005/03/10
Phantom: SAM 1196
Measurement SW: DASY4, V4.5 Build 19; Postprocessing SW: SEMCAD, V1.8 Build 145

Area Scan (61x91x1): Measurement grid: dx=10mm, dy=10mm
Maximum value of SAR (interpolated) = 0.446 mW/g

Zoom Scan (7x7x8)/Cube 0: Measurement grid: dx=4.3mm, dy=4.3mm, dz=3mm
Reference Value = 9.39 V/m; Power Drift = -0.074 dB
Peak SAR (extrapolated) = 0.754 W/kg

SAR(1 g) = 0.240 mW/g; SAR(10 g) = 0.087 mW/g
Maximum value of SAR (measured) = 0.436 mW/g

Test Date = 06/16/05
Ambient Temperature = 25.0 degree.C.
Liquid Temperature = Before 24.8 degree.C. , After 24.9 degree.C.

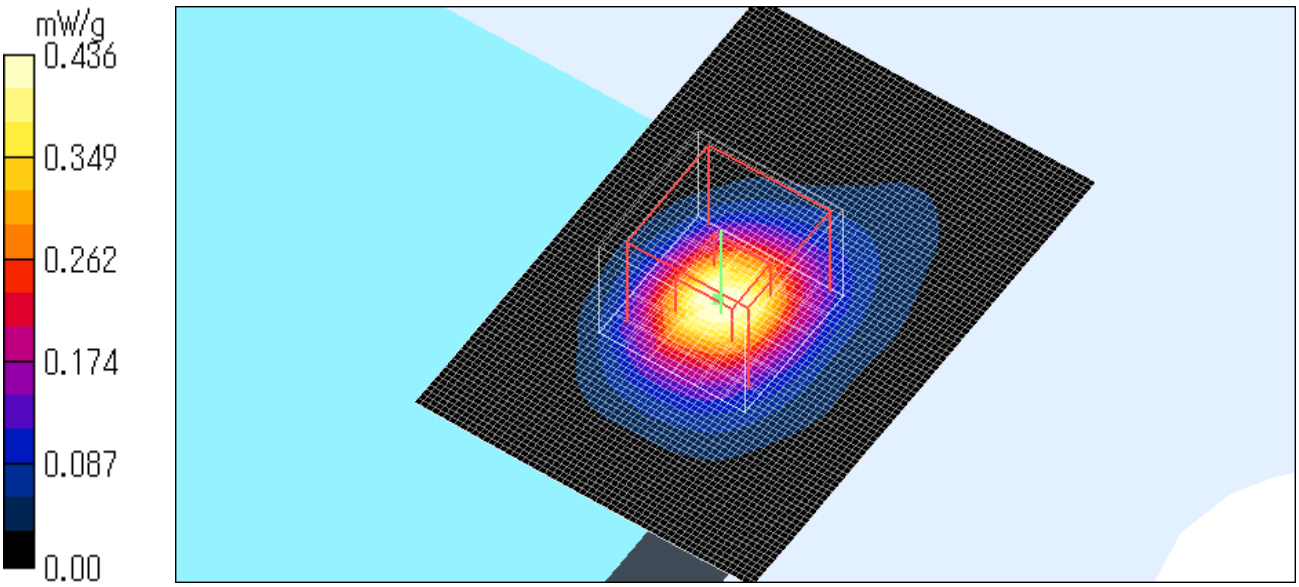

IRF303JU / Body / ANT.2 Right Side / 5260MHz / QPSK(12Mbps)

Duty Cycle: 1:1
Medium parameters used: f = 5200 MHz; σ = 5.32 mho/m; ε_r = 46.8; ρ = 1000 kg/m^3
Phantom section: Flat Section
Measurement Standard: DASY4 (High Precision Assessment)

DASY4 Configuration:
Probe: EX3DV3 - SN3507; ConvF(4.86, 4.86, 4.86); Calibrated: 2005/04/12
Sensor-Surface: 2mm (Mechanical Surface Detection)
Electronics: DAE3 Sn516; Calibrated: 2005/03/10
Phantom: SAM 1196
Measurement SW: DASY4, V4.5 Build 19; Postprocessing SW: SEMCAD, V1.8 Build 145

Area Scan (81x101x1): Measurement grid: dx=10mm, dy=10mm
Maximum value of SAR (interpolated) = 0.112 mW/g

Zoom Scan (7x7x8)/Cube 0: Measurement grid: dx=4.3mm, dy=4.3mm, dz=3mm
Reference Value = 3.95 V/m; Power Drift = -0.299 dB
Peak SAR (extrapolated) = 0.191 W/kg

SAR(1 g) = 0.059 mW/g; SAR(10 g) = 0.023 mW/g
Maximum value of SAR (measured) = 0.108 mW/g

Test Date = 06/16/05
Ambient Temperature = 25.0 degree.C.
Liquid Temperature = Before 25.0 degree.C. , After 24.9 degree.C.

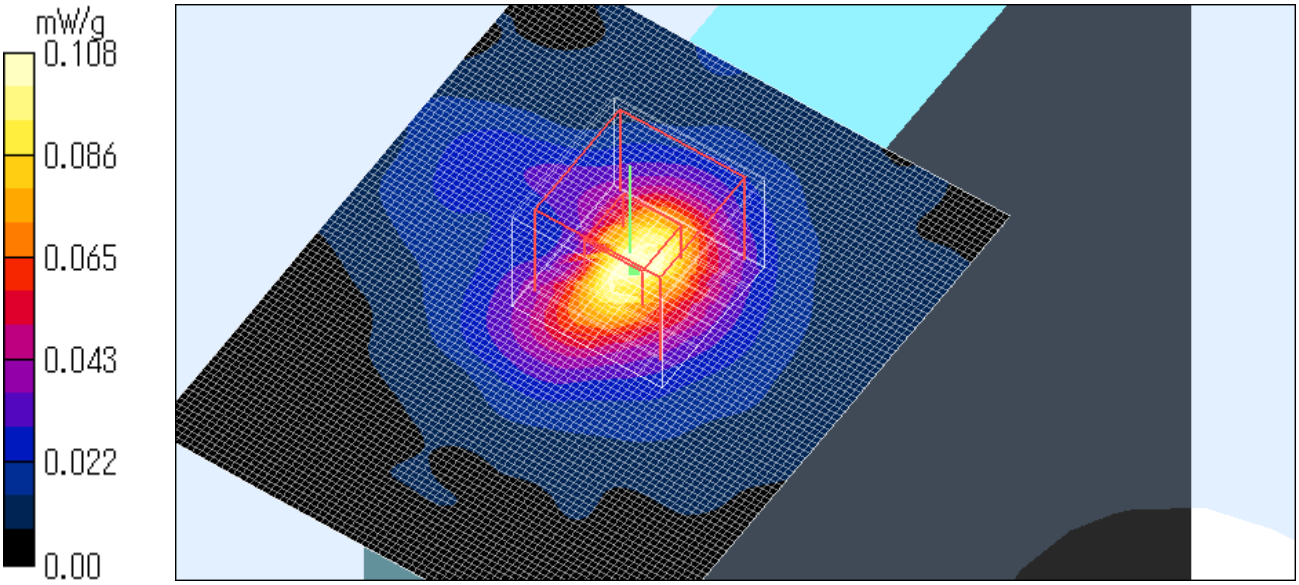

IRF303JU / Body / ANT.2 Right Back / 5260MHz / QPSK(12Mbps)

Duty Cycle: 1:1
Medium parameters used: f = 5200 MHz; σ = 5.32 mho/m; ε_r = 46.8; ρ = 1000 kg/m^3
Phantom section: Flat Section
Measurement Standard: DASY4 (High Precision Assessment)

DASY4 Configuration:
Probe: EX3DV3 - SN3507; ConvF(4.86, 4.86, 4.86); Calibrated: 2005/04/12
Sensor-Surface: 2mm (Mechanical Surface Detection)
Electronics: DAE3 Sn516; Calibrated: 2005/03/10
Phantom: SAM 1196
Measurement SW: DASY4, V4.5 Build 19; Postprocessing SW: SEMCAD, V1.8 Build 145

Area Scan (81x101x1): Measurement grid: dx=10mm, dy=10mm
Maximum value of SAR (interpolated) = 0.107 mW/g

Zoom Scan (7x7x8)/Cube 0: Measurement grid: dx=4.3mm, dy=4.3mm, dz=3mm
Reference Value = 4.14 V/m; Power Drift = -0.093 dB
Peak SAR (extrapolated) = 0.189 W/kg

SAR(1 g) = 0.062 mW/g; SAR(10 g) = 0.028 mW/g
Maximum value of SAR (measured) = 0.107 mW/g

Test Date = 06/16/05
Ambient Temperature = 25.0 degree.C.
Liquid Temperature = Before 24.8 degree.C. , After 24.7 degree.C.

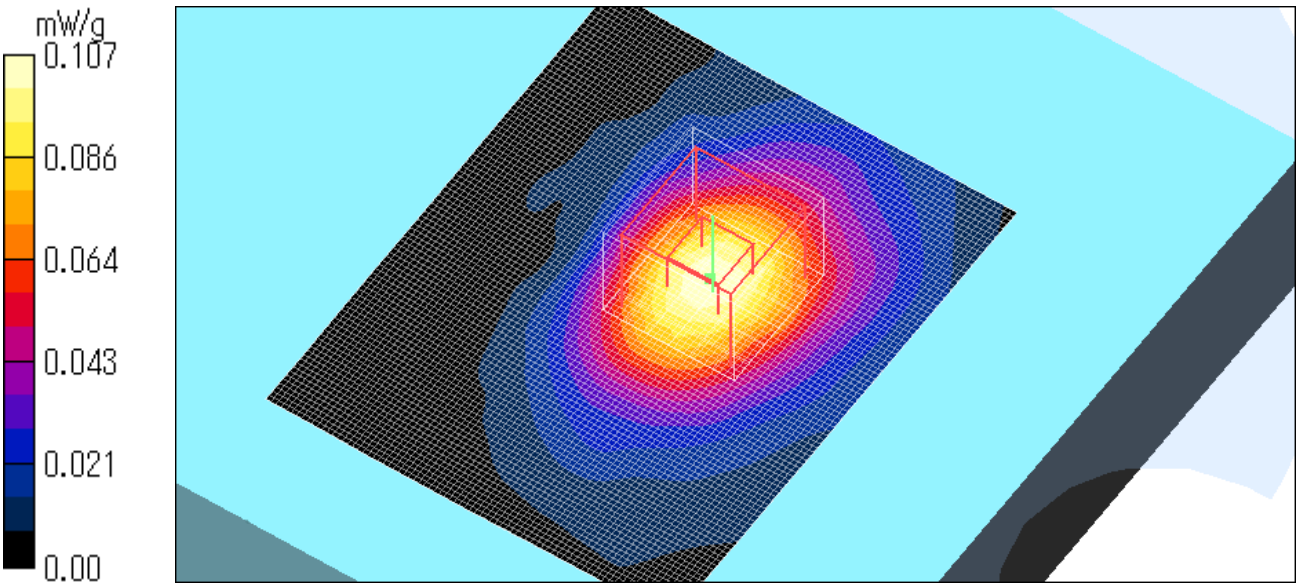

IRF303JU / Body / ANT.2 Right Top / 5260MHz / QPSK(12Mbps)

Duty Cycle: 1:1
Medium parameters used: f = 5200 MHz; σ = 5.32 mho/m; ε_r = 46.8; ρ = 1000 kg/m^3
Phantom section: Flat Section
Measurement Standard: DASY4 (High Precision Assessment)

DASY4 Configuration:
Probe: EX3DV3 - SN3507; ConvF(4.86, 4.86, 4.86); Calibrated: 2005/04/12
Sensor-Surface: 2mm (Mechanical Surface Detection)
Electronics: DAE3 Sn516; Calibrated: 2005/03/10
Phantom: SAM 1196
Measurement SW: DASY4, V4.5 Build 19; Postprocessing SW: SEMCAD, V1.8 Build 145

Area Scan (91x101x1): Measurement grid: dx=10mm, dy=10mm
Maximum value of SAR (interpolated) = 0.025 mW/g

Zoom Scan (7x7x8)/Cube 0: Measurement grid: dx=4.3mm, dy=4.3mm, dz=3mm
Reference Value = 1.11 V/m; Power Drift = 0.185 dB
Peak SAR (extrapolated) = 0.095 W/kg

SAR(1 g) = 0.015 mW/g; SAR(10 g) = 0.00708 mW/g
Maximum value of SAR (measured) = 0.026 mW/g

Test Date = 06/16/05
Ambient Temperature = 25.0 degree.C.
Liquid Temperature = Before 24.9 degree.C. , After 24.8 degree.C.

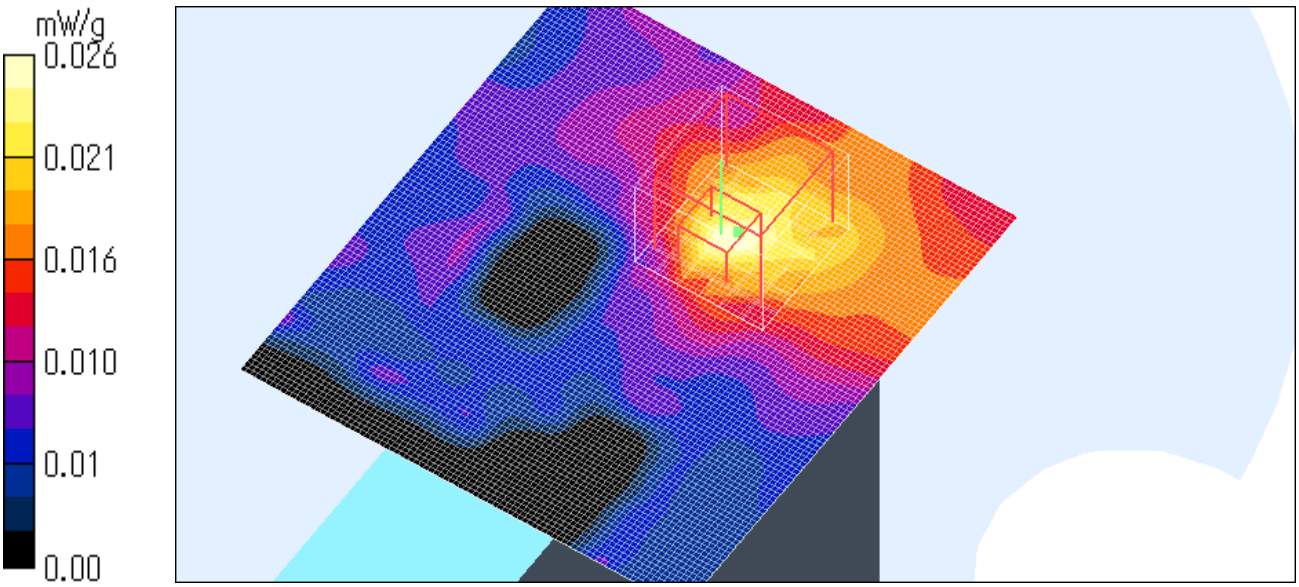

IRF303JU / Body / ANT.2 Right Front / 5180MHz / QPSK(12Mbps)

Duty Cycle: 1:1
Medium parameters used: f = 5200 MHz; σ = 5.32 mho/m; ε_r = 46.8; ρ = 1000 kg/m^3
Phantom section: Flat Section
Measurement Standard: DASY4 (High Precision Assessment)

DASY4 Configuration:
Probe: EX3DV3 - SN3507; ConvF(4.86, 4.86, 4.86); Calibrated: 2005/04/12
Sensor-Surface: 2mm (Mechanical Surface Detection)
Electronics: DAE3 Sn516; Calibrated: 2005/03/10
Phantom: SAM 1196
Measurement SW: DASY4, V4.5 Build 19; Postprocessing SW: SEMCAD, V1.8 Build 145

Area Scan (61x91x1): Measurement grid: dx=10mm, dy=10mm
Maximum value of SAR (interpolated) = 0.706 mW/g

Zoom Scan (7x7x8)/Cube 0: Measurement grid: dx=4.3mm, dy=4.3mm, dz=3mm
Reference Value = 11.5 V/m; Power Drift = -0.134 dB
Peak SAR (extrapolated) = 1.09 W/kg

SAR(1 g) = 0.357 mW/g; SAR(10 g) = 0.131 mW/g
Maximum value of SAR (measured) = 0.648 mW/g

Test Date = 06/16/05
Ambient Temperature = 25.0 degree.C.
Liquid Temperature = Before 24.9 degree.C. , After 25.0 degree.C.

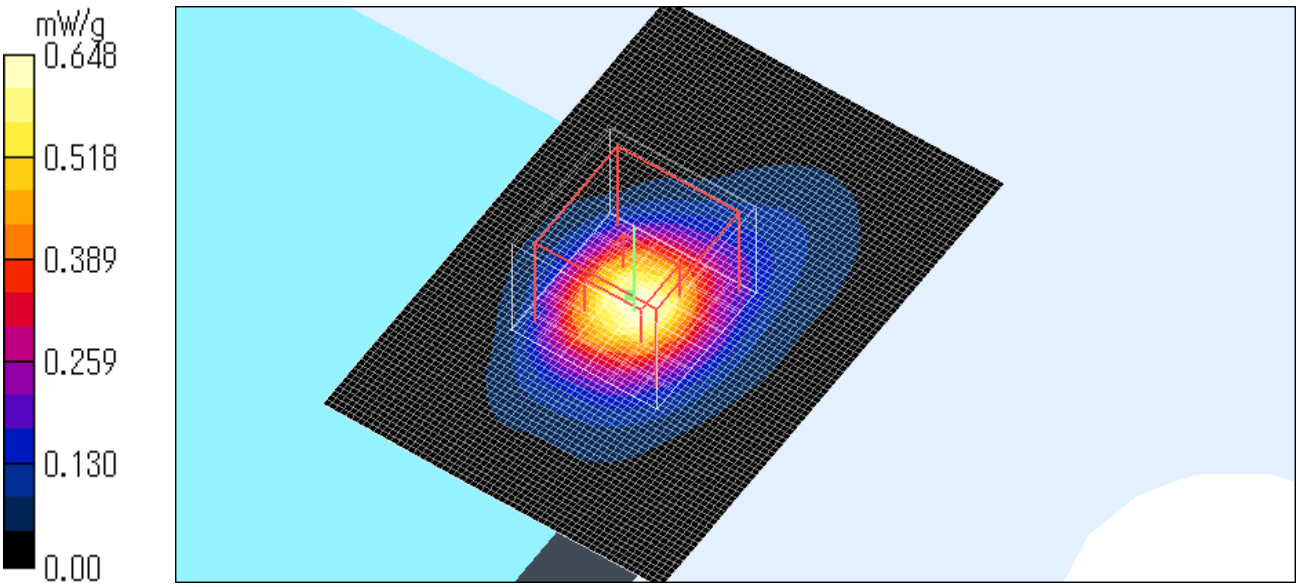

IRF303JU / Body / ANT.2 Right Front / 5320MHz / QPSK(12Mbps)

Duty Cycle: 1:1
Medium parameters used: f = 5200 MHz; σ = 5.32 mho/m; ε_r = 46.8; ρ = 1000 kg/m^3
Phantom section: Flat Section
Measurement Standard: DASY4 (High Precision Assessment)

DASY4 Configuration:
Probe: EX3DV3 - SN3507; ConvF(4.86, 4.86, 4.86); Calibrated: 2005/04/12
Sensor-Surface: 2mm (Mechanical Surface Detection)
Electronics: DAE3 Sn516; Calibrated: 2005/03/10
Phantom: SAM 1196
Measurement SW: DASY4, V4.5 Build 19; Postprocessing SW: SEMCAD, V1.8 Build 145

Area Scan (61x91x1): Measurement grid: dx=10mm, dy=10mm
Maximum value of SAR (interpolated) = 0.430 mW/g

Zoom Scan (7x7x8)/Cube 0: Measurement grid: dx=4.3mm, dy=4.3mm, dz=3mm
Reference Value = 9.34 V/m; Power Drift = -0.141 dB
Peak SAR (extrapolated) = 0.714 W/kg

SAR(1 g) = 0.226 mW/g; SAR(10 g) = 0.082 mW/g
Maximum value of SAR (measured) = 0.414 mW/g

Test Date = 06/16/05
Ambient Temperature = 25.0 degree.C.
Liquid Temperature = Before 25.0 degree.C. , After 25.0 degree.C.

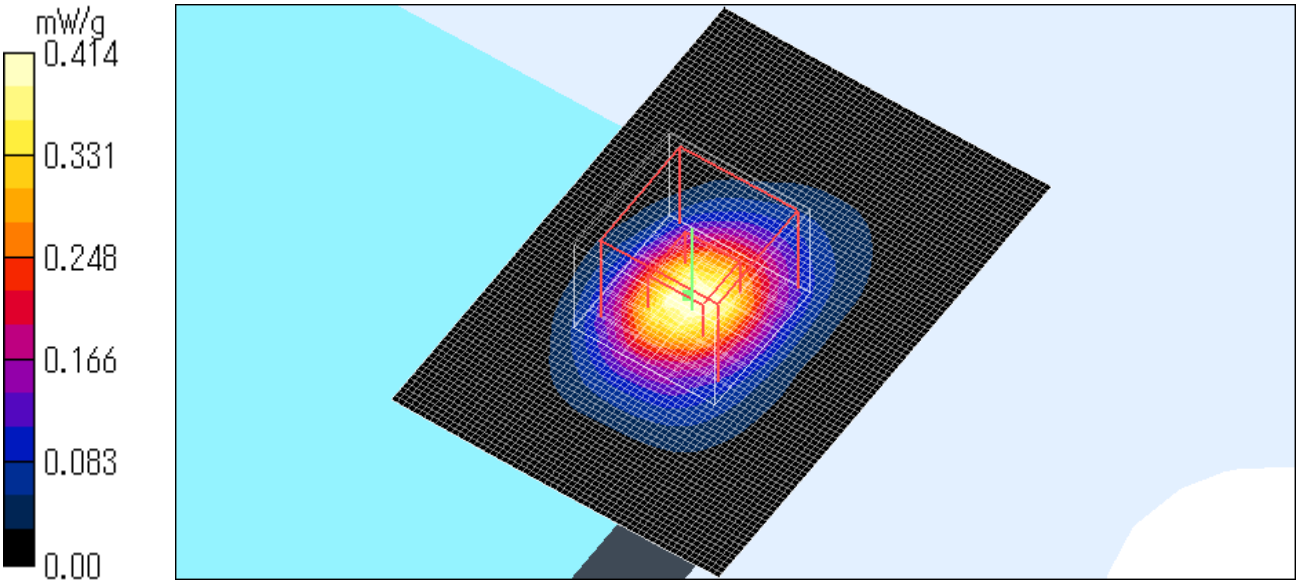

IRF303JU / Body / ANT.1 Left Front 5mm / 5320MHz / QPSK(12Mbps)

Duty Cycle: 1:1
Medium parameters used: f = 5200 MHz; σ = 5.32 mho/m; ε_r = 46.8; ρ = 1000 kg/m^3
Phantom section: Flat Section
Measurement Standard: DASY4 (High Precision Assessment)

DASY4 Configuration:
Probe: EX3DV3 - SN3507; ConvF(4.86, 4.86, 4.86); Calibrated: 2005/04/12
Sensor-Surface: 2mm (Mechanical Surface Detection)
Electronics: DAE3 Sn516; Calibrated: 2005/03/10
Phantom: SAM 1196
Measurement SW: DASY4, V4.5 Build 19; Postprocessing SW: SEMCAD, V1.8 Build 145

Area Scan (81x91x1): Measurement grid: dx=10mm, dy=10mm
Maximum value of SAR (interpolated) = 0.409 mW/g

Zoom Scan (7x7x8)/Cube 0: Measurement grid: dx=4.3mm, dy=4.3mm, dz=3mm
Reference Value = 6.13 V/m; Power Drift = -0.298 dB
Peak SAR (extrapolated) = 0.668 W/kg

SAR(1 g) = 0.210 mW/g; SAR(10 g) = 0.078 mW/g
Maximum value of SAR (measured) = 0.387 mW/g

Test Date = 06/16/05
Ambient Temperature = 25.0 degree.C.
Liquid Temperature = Before 24.8 degree.C. , After 24.8 degree.C.

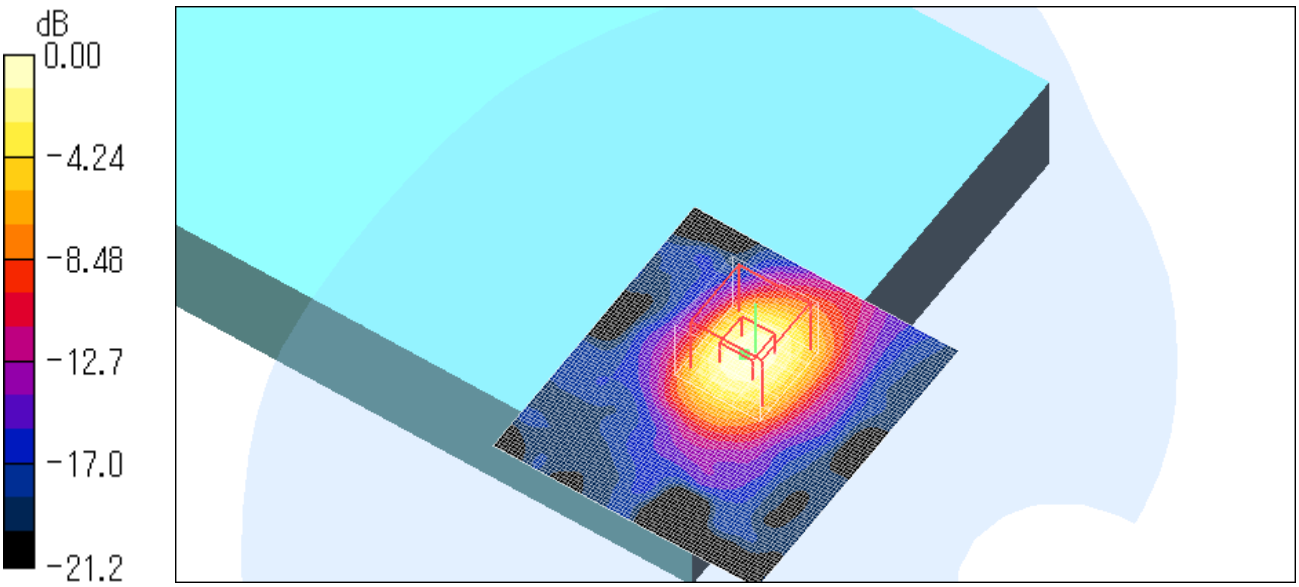

0 dB = 0.387mW/g

IRF303JU / Body / ANT.1 Left Front 10mm / 5320MHz / QPSK(12Mbps)

Duty Cycle: 1:1
Medium parameters used: f = 5200 MHz; σ = 5.32 mho/m; ε_r = 46.8; ρ = 1000 kg/m^3
Phantom section: Flat Section
Measurement Standard: DASY4 (High Precision Assessment)

DASY4 Configuration:
Probe: EX3DV3 - SN3507; ConvF(4.86, 4.86, 4.86); Calibrated: 2005/04/12
Sensor-Surface: 2mm (Mechanical Surface Detection)
Electronics: DAE3 Sn516; Calibrated: 2005/03/10
Phantom: SAM 1196
Measurement SW: DASY4, V4.5 Build 19; Postprocessing SW: SEMCAD, V1.8 Build 145

Area Scan (81x91x1): Measurement grid: dx=10mm, dy=10mm
Maximum value of SAR (interpolated) = 0.261 mW/g

Zoom Scan (7x7x8)/Cube 0: Measurement grid: dx=4.3mm, dy=4.3mm, dz=3mm
Reference Value = 5.16 V/m; Power Drift = -0.165 dB
Peak SAR (extrapolated) = 0.435 W/kg

SAR(1 g) = 0.142 mW/g; SAR(10 g) = 0.059 mW/g
Maximum value of SAR (measured) = 0.252 mW/g

Test Date = 06/16/05
Ambient Temperature = 25.0 degree.C.
Liquid Temperature = Before 24.8 degree.C. , After 24.7 degree.C.

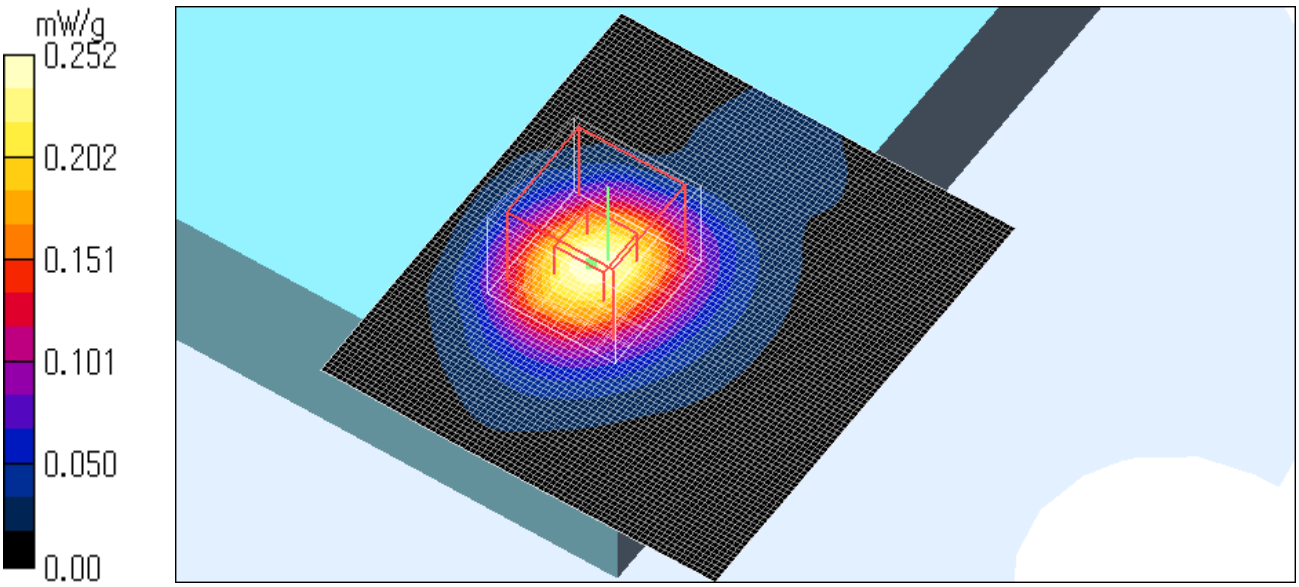

APPENDIX 3 : Validation Measurement data

5200MHz System Validation / Dipole 5GHz / Forward Conducted Power : 250mW

Dipole 5800 MHz; Type: D5GHzV2; Serial: 1020

Communication System: CW; Frequency: 5200 MHz;Duty Cycle: 1:1
Medium parameters used: f = 5200 MHz; σ = 5.41 mho/m; ε_r = 46.8; ρ = 1000 kg/m^3
Phantom section: Flat Section
Measurement Standard: DASY4 (High Precision Assessment)
DASY4 Configuration:
Probe: EX3DV3 - SN3507; ConvF(4.62, 4.62, 4.62); Calibrated: 2004/02/20
Sensor-Surface: 2mm (Mechanical Surface Detection)
Electronics: DAE3 Sn516; Calibrated: 2005/03/10
Phantom: SAM 1196
Measurement SW: DASY4, V4.5 Build 19; Postprocessing SW: SEMCAD, V1.8 Build 145

Area Scan (51x51x1): Measurement grid: dx=10mm, dy=10mm
Maximum value of SAR (interpolated) = 47.2 mW/g

Zoom Scan (7x7x8)/Cube 0: Measurement grid: dx=4.3mm, dy=4.3mm, dz=3mm
Reference Value = 92.2 V/m; Power Drift = -0.097 dB
Peak SAR (extrapolated) = 71.6 W/kg

SAR(1 g) = 19.3 mW/g; SAR(10 g) = 5.55 mW/g
Maximum value of SAR (measured) = 36.5 mW/g

Test Date = 06/15/05
Ambient Temperature = 25.0 degree.C.
Liquid Temperature = Before 24.9 degree.C. , After 24.9 degree.C.

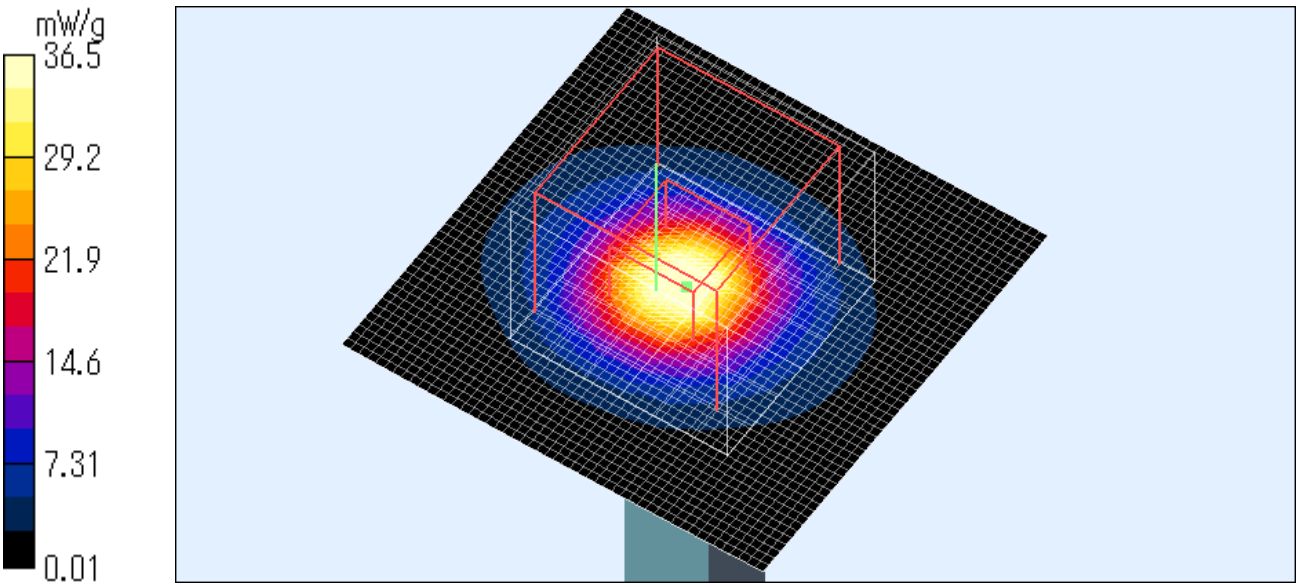

5200MHz System Validation / Dipole 5GHz MHz / Forward Conducted Power : 250mW

Dipole 5800 MHz; Type: D5GHzV2; Serial: 1020

Communication System: CW; Frequency: 5200 MHz;Duty Cycle: 1:1
Medium parameters used: f = 5200 MHz; σ = 5.32 mho/m; ε_r = 46.8; ρ = 1000 kg/m^3
Phantom section: Flat Section
Measurement Standard: DASY4 (High Precision Assessment)
DASY4 Configuration:
Probe: EX3DV3 - SN3507; ConvF(4.62, 4.62, 4.62); Calibrated: 2004/02/20
Sensor-Surface: 2mm (Mechanical Surface Detection)
Electronics: DAE3 Sn516; Calibrated: 2005/03/10
Phantom: SAM 1196
Measurement SW: DASY4, V4.5 Build 19; Postprocessing SW: SEMCAD, V1.8 Build 145

Area Scan (51x51x1): Measurement grid: dx=10mm, dy=10mm
Maximum value of SAR (interpolated) = 45.3 mW/g

Zoom Scan (7x7x8)/Cube 0: Measurement grid: dx=4.3mm, dy=4.3mm, dz=3mm
Reference Value = 93.5 V/m; Power Drift = -0.076 dB
Peak SAR (extrapolated) = 70.2 W/kg

SAR(1 g) = 19.1 mW/g; SAR(10 g) = 5.51 mW/g
Maximum value of SAR (measured) = 36.4 mW/g
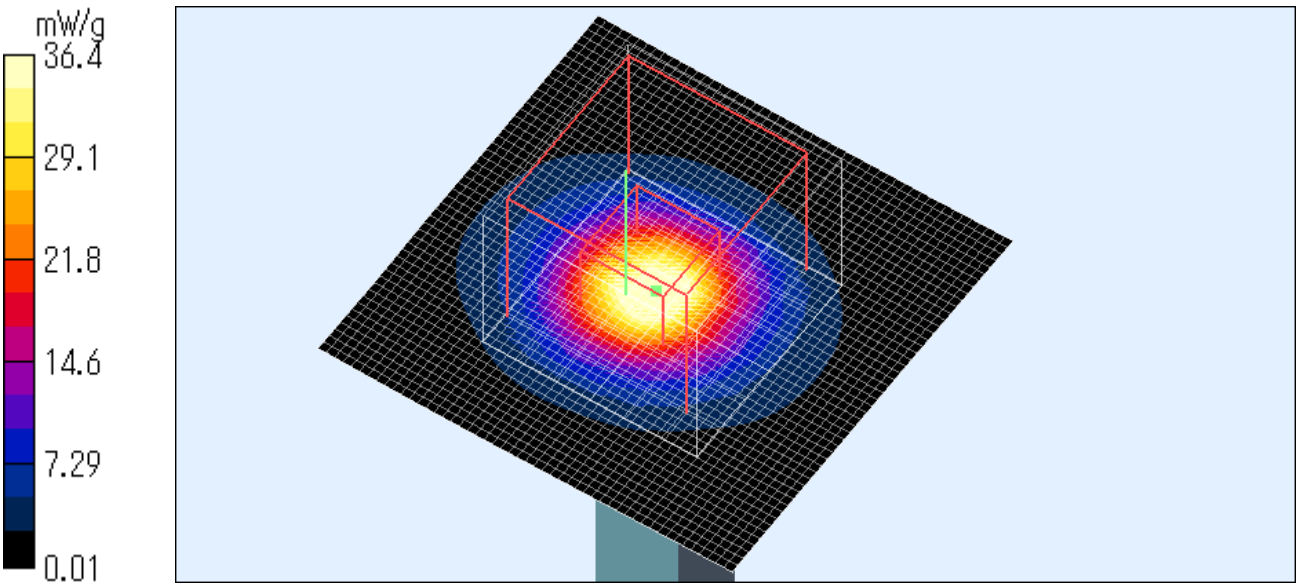
Test Date = 06/16/05
Ambient Temperature = 25.0 degree.C.
Liquid Temperature = Before 24.9 degree.C. , After 24.9 degree.C.