Instructions for Use EN

LCD Monitor

Before operating the unit, please read this manual thoroughly and retain it for future reference.

OEV-271MUH
OEV-321MUH
OEV-431MUH

© 2025 Sony Corporation

5070716010

Sony Corporation
1-7-1 Konan Minato-ku Tokyo,
108-0075 Japan

Printed in Japan

OEV-271MUH/321MUH/431MUH
5-070-716-01(1)

English

Before operating the unit, please read this manual thoroughly and retain it for future reference.

Indications for Use/Intended Use

The LCD Monitor is intended to provide 4K 2D color video displays of images from endoscopic/laparoscopic camera systems, surgical microscope and other compatible medical imaging systems.
The LCD Monitor is a widescreen, high-definition, medical grade monitor for real-time use during minimally invasive surgical procedures and is suitable for use in hospital operating rooms, surgical centers, clinics, doctors' offices and similar medical environments.

Notes

- This equipment is for medical professionals.
- This equipment is intended for use in medical environments, such as doctors' offices, examination rooms, and operating rooms.
- Essential performance is to provide a live endoscopic image that can be used for identifying observed objects.

Warning

To reduce the risk of fire or electric shock, do not expose this equipment to rain or moisture.

To avoid electrical shock, do not open the cabinet. Refer servicing to qualified personnel only.

No modification of this equipment is allowed.

Warning

To avoid the risk of electric shock, this equipment must only be connected to a supply mains with protective earth.

Warning

This unit has no power switch.
To disconnect the main power, unplug the power plug.
When installing the unit, incorporate a readily accessible disconnect device in the fixed wiring, or connect the power plug to an easily accessible socket-outlet near the unit.
Do not position the ME equipment where it is difficult to unplug the power plug.
If a fault should occur during operation of the unit, operate the disconnect device to switch the power supply off, or disconnect the power plug.

Symbols on the product

Safety sign (OEV-271MUH/321MUH)
Follow the warnings in the instructions for use for parts of the unit on which this symbol appears.
NOTE Background color: Blue
Symbol: White

Consult the instructions for use
Follow the directions in the instructions for use for parts of the unit on which this symbol appears.

This symbol indicates the manufacturer, and appears next to the manufacturer's name and address.

This symbol indicates the date of manufacture.

SN This symbol indicates the serial number.

UDI This symbol indicates the Unique Device Identifier (UDI), and appears next to the bar code representation of the Unique Device Identification.

This symbol indicates the equipotential terminal which brings the various parts of a system to the same potential.

Storage and transport temperature
This symbol indicates the acceptable temperature range for storage and transport environments.

Storage and transport humidity
This symbol indicates the acceptable humidity range for storage and transport environments.

Storage and transport pressure
This symbol indicates the acceptable atmospheric pressure range for storage and transport environments.

For customers in the U.S.A.

For the glossary of symbols, visit:
https://rd1.sony.net/help/med/symbols/en/

For customers in the U.S.A.

This equipment has been tested and found to comply with the limits for a Class A digital device, pursuant to part 15 of the FCC Rules. These limits are designed to provide reasonable protection against harmful interference when the equipment is operated in a commercial environment. This equipment generates, uses and can radiate radio frequency energy and, if not installed and used in accordance with the instruction manual, may cause harmful interference to radio communications. Operation of this equipment in a residential area is likely to cause harmful interference in which case the user will be required to correct the interference at his own expense.
You are cautioned that any changes or modifications not expressly approved in this manual could void your authority to operate this equipment.
All interface cables used to connect peripherals must be shielded in order to comply with the limits for a digital device pursuant to Subpart B of part 15 of FCC Rules.

For customers in the U.S.A.

Caution

Federal law (United States of America) restricts this device to sale by or on the order of a licensed healthcare practitioner.

Rx
ONLY

Important safeguards and notices for use in the medical environments

1. All devices connected to the unit must be certified or compliant according to IEC 60601-1, IEC 60950-1, IEC 62368-1 and IEC 60065 standards and other IEC/ISO standards applicable to the devices.

2. Furthermore, the system as a whole must comply with IEC 60601-1 standards. All peripheral devices connected to the signal input/output sections of the unit constitute the medical-use system, and therefore, the user is responsible for ensuring that the system as a whole complies with IEC 60601-1 standards. If in doubt, consult qualified service personnel.

3. Connecting the unit to other devices may increase the leakage current.

4. For all peripheral devices connected to the unit that operate on commercial power supplies and do not comply with IEC 60601-1 standards, incorporate an isolation transformer that complies with IEC 60601-1 standards and connect to the commercial power supply via the transformer.

5. The unit generates, uses, and may radiate radio frequency energy. If it is not installed and used in accordance with the instruction manual, it may cause interference on other devices. If the unit causes interference (which can be determined by disconnecting the power cord from the unit), try the following.
   – Relocate the unit with respect to the affected devices.
   – Connect the unit and the affected devices to different branch circuits.
   For more information, consult qualified service personnel.
   (Applicable standard: IEC 60601-1-2)

Important EMC notices for use in medical environments

- The OEV-271MUH/321MUH/431MUH needs special precautions regarding EMC and needs to be installed and put into service according to the EMC information provided in the instructions for use.
- The OEV-271MUH/321MUH/431MUH is intended for use in a professional healthcare facility environment.
- Portable and mobile RF communications equipment, such as cellular phones, can affect the OEV-271MUH/321MUH/431MUH.

Warning

- Portable RF communications equipment should be used no closer than 30 cm (12 inches) to any part of the OEV-271MUH/321MUH/431MUH. Otherwise, degradation of the performance of this equipment could result.
- If the OEV-271MUH/321MUH/431MUH will be used adjacent to or stacked with other equipment, normal operation of the OEV-271MUH/321MUH/431MUH under such configurations should be verified via observation.
- The use of accessories and cables other than those specified, with the exception of replacement parts sold by Sony Corporation, may result in increased emissions or decreased immunity of the OEV-271MUH/321MUH/431MUH.

Guidance and manufacturer's declaration – electromagnetic emissions		
The OEV-271MUH/321MUH/431MUH is intended for use in the electromagnetic environment specified below. The customer or the user of the OEV-271MUH/321MUH/431MUH should assure that it is used in such an environment.		
Emission test	Compliance	Electromagnetic environment – guidance
RF emissions CISPR 11	Group 1	The OEV-271MUH/321MUH/431MUH uses RF energy only for its internal function. Therefore, its RF emissions are very low and are not likely to cause any interference in nearby electronic equipment.
RF emissions CISPR 11 CISPR 32	Class B	The OEV-271MUH/321MUH/431MUH is suitable for use in all establishments, including domestic establishments and those directly connected to the public low-voltage power supply network that supplies buildings used for domestic purposes.
Harmonic emissions IEC 61000-3-2	Class D (AC input) Not applicable (DC input) (Only for OEV-271MUH and OEV-321MUH)	
Voltage fluctuations/ flicker emissions IEC 61000-3-3	Complies (AC input) Not applicable (DC input) (Only for OEV-271MUH and OEV-321MUH)	

Guidance and manufacturer's declaration – electromagnetic immunity				
The OEV-271MUH/321MUH/431MUH is intended for use in the electromagnetic environment specified below. The customer or the user of the OEV-271MUH/321MUH/431MUH should assure that it is used in such an environment.				
Immunity test	IEC 60601 test level	Compliance level		Electromagnetic environment – guidance
		DC input (Only for OEV-271MUH and OEV-321MUH)	AC input	
Electrostatic discharge (ESD) IEC 61000-4-2	±8 kV contact ±15 kV air	±8 kV contact ±15 kV air	±8 kV contact ±15 kV air	Floors should be wood, concrete or ceramic tile. If floors are covered with synthetic material, a relative humidity of at least 30% is recommended.
Electrical fast transient/burst IEC 61000-4-4	±2 kV for power supply lines ±1 kV for input/ output lines	±1 kV for input/ output lines	±2 kV for power supply lines ±1 kV for input/ output lines	Mains power quality should be that of a typical commercial or hospital environment.
Surge IEC 61000-4-5	±1 kV line(s) to line(s) ±2 kV line(s) to earth	Not applicable	±1 kV differential mode ±2 kV common mode	Mains power quality should be that of a typical commercial or hospital environment.
Voltage dips, short interruptions and voltage variations on power supply input lines IEC 61000-4-11	0% U_T (100% dip in U_T) for 0.5/1 cycles [a] 40% U_T (60% dip in U_T) for 5 cycles 70% U_T (30% dip in U_T) for 25/30 cycles [a] (for 0.5 sec) 0% U_T (100% dip in U_T) for 250/300 cycles [a] (for 5 sec)	Not applicable	0% U_T (100% dip in U_T) for 0.5/1 cycles [a] 40% U_T (60% dip in U_T) for 5 cycles 70% U_T (30% dip in U_T) for 25/30 cycles [a] (for 0.5 sec) 0% U_T (100% dip in U_T) for 250/300 cycles [a] (for 5 sec)	Mains power quality should be that of a typical commercial or hospital environment. If the user of the OEV-271MUH/321MUH/ 431MUH requires continued operation during power mains interruptions, it is recommended that the OEV-271MUH/321MUH/ 431MUH be powered from an uninterruptible power supply or a battery.
Power frequency (50/60 Hz) magnetic field IEC 61000-4-8	30 A/m	30 A/m	30 A/m	Power frequency magnetic fields should be at levels characteristic of a typical location in a typical commercial or hospital environment.

Proximity magnetic fields IEC 61000-4-39	65 A/m 134.2 kHz Pulse modulation 2.1 kHz 7.5 A/m 13.56 MHz Pulse modulation 50 kHz	65 A/m 134.2 kHz Pulse modulation 2.1 kHz 7.5 A/m 13.56 MHz Pulse modulation 50 kHz	65 A/m 134.2 kHz Pulse modulation 2.1 kHz 7.5 A/m 13.56 MHz Pulse modulation 50 kHz	Proximity magnetic fields of the OEV-271MUH/321MUH/431MUH should be at levels characteristic of a typical location in a typical commercial or hospital environment.
NOTE: U_T is the a.c. mains voltage prior to application of the test level.				
a For example, 10/12 means 10 cycles at 50 Hz or 12 cycles at 60 Hz.				

Guidance and manufacturer's declaration – electromagnetic immunity			
The OEV-271MUH/321MUH/431MUH is intended for use in the electromagnetic environment specified below. The customer or the user of the OEV-271MUH/321MUH/431MUH should assure that it is used in such an environment.			
Immunity test	IEC 60601 test level	Compliance level	Electromagnetic environment – guidance
			Portable and mobile RF communications equipment should be used no closer to any part of the OEV-271MUH/321MUH/431MUH, including cables, than the recommended separation distance calculated from the equation appliance to the frequency of the transmitter. **Recommended separation distance**
Conducted RF IEC 61000-4-6	3 Vrms 150 kHz to 80 MHz outside ISM bands [c] 6 Vrms 150 kHz to 80 MHz in ISM bands [c]	3 Vrms 6 Vrms	$d = 1.2\sqrt{P}$

Radiated RF IEC 61000-4-3	3 V/m 80 MHz to 2.7 GHz	3 V/m	IEC 60601-1-2: 2007 $d = 1.2\sqrt{P}$ 80 MHz to 800 MHz $d = 2.3\sqrt{P}$ 800 MHz to 2.5 GHz IEC 60601-1-2: 2014 + A1: 2020 $d = 2.0\sqrt{P}$ 80 MHz to 2.7 GHz Where *P* is the maximum output power rating of the transmitter in watts (W) according to the transmitter manufacturer and *d* is the recommended separation distance in meters (m). Field strengths from fixed RF transmitters, as determined by an electromagnetic site survey, [a] should be less than the compliance level in each frequency range. [b] Interference may occur in the vicinity of equipment marked with following symbol:

NOTE 1: At 80 MHz and 800 MHz, the higher frequency range applies.

NOTE 2: These guidelines may not apply in all situations. Electromagnetic propagation is affected by absorption and reflection from structures, objects and people.

a Field strengths from fixed transmitters, such as base stations for radio (cellular/cordless) telephones and land mobile radios, amateur radio, AM and FM radio broadcast and TV broadcast cannot be predicted theoretically with accuracy. To assess the electromagnetic environment due to fixed RF transmitters, an electromagnetic site survey should be considered. If the measured field strength in the location in which the OEV-271MUH/321MUH/431MUH is used exceeds the applicable RF compliance level above, the OEV-271MUH/321MUH/431MUH should be observed to verify normal operation. If abnormal performance is observed, additional measures may be necessary, such as reorienting or relocating the OEV-271MUH/321MUH/431MUH.

b Over the frequency range 150 kHz to 80 MHz, field strengths should be less than 3 V/m.

c The ISM (industrial, scientific and medical) bands between 150 kHz and 80 MHz are 6.765 MHz to 6.795 MHz; 13.553 MHz to 13.567 MHz; 26.957 MHz to 27.283 MHz; and 40.66 MHz to 40.70 MHz.

Recommended separation distances between portable and mobile RF communications equipment and the OEV-271MUH/321MUH/431MUH

The OEV-271MUH/321MUH/431MUH is intended for use in an electromagnetic environment in which radiated RF disturbances are controlled. The customer or the user of the OEV-271MUH/321MUH/431MUH can help prevent electromagnetic interference by maintaining a minimum distance between portable and mobile RF communications equipment (transmitters) and the OEV-271MUH/321MUH/431MUH as recommended below, according to the maximum output power of the communications equipment.

Rated maximum output power of transmitter W	Separation distance according to frequency of transmitter m				
	IEC 60601-1-2 : 2007			IEC 60601-1-2 : 2014 + A1: 2020	
	150 kHz to 80 MHz $d = 1.2\sqrt{P}$	80 MHz to 800 MHz $d = 1.2\sqrt{P}$	800 MHz to 2.5 GHz $d = 2.3\sqrt{P}$	150 kHz to 80 MHz $d = 1.2\sqrt{P}$	80 MHz to 2.7 GHz $d = 2.0\sqrt{P}$
0.01	0.12	0.12	0.23	0.12	0.20
0.1	0.38	0.38	0.73	0.38	0.63
1	1.2	1.2	2.3	1.2	2.0
10	3.8	3.8	7.3	3.8	6.3
100	12	12	23	12	20

For transmitters rated a maximum output power not listed above, the recommended separation distance *d* in meters (m) can be estimated using the equation applicable to the frequency of the transmitter, where *P* is the maximum output power rating of the transmitter in watts (W) according to the transmitter manufacturer.

NOTE 1: At 80 MHz and 800 MHz, the separation distance for the higher frequency range applies.

NOTE 2: These guidelines may not apply in all situations. Electromagnetic propagation is affected by absorption and reflection from structures, objects and people.

Guidance and manufacturer's declaration – electromagnetic immunity					
The OEV-271MUH/321MUH/431MUH is intended for use in an electromagnetic environment in which radiated RF disturbances are controlled. Portable RF communications equipment should be used no closer than 30 cm (12 inches) to any part of the OEV-271MUH/321MUH/431MUH. Otherwise, degradation of the performance of this equipment could result.					
Immunity test	Band [a]	Service [a]	Modulation	IEC 60601 test level	Compliance level
Proximity fields from RF wireless communications equipment IEC 61000-4-3	380 – 390 MHz	TETRA 400	Pulse modulation 18 Hz	27 V/m	27 V/m
	430 – 470 MHz	GMRS 460 FRS 460	FM ±5 kHz deviation 1 kHz sine	28 V/m	28 V/m
	704 – 787 MHz	LTE Band 13, 17	Pulse modulation 217 Hz	9 V/m	9 V/m
	800 – 960 MHz	GSM 800/900 TETRA 800 iDEN 820 CDMA 850 LTE Band 5	Pulse modulation 18 Hz	28 V/m	28 V/m
	1,700 – 1,990 MHz	GSM 1800 CDMA 1900 GSM 1900 DECT LTE Band 1, 3, 4, 25 UMTS	Pulse modulation 217 Hz	28 V/m	28 V/m
	2,400 – 2,570 MHz	Bluetooth WLAN 802.11 b/g/n RFID 2450 LTE Band 7	Pulse modulation 217 Hz	28 V/m	28 V/m
	5,100 – 5,800 MHz	WLAN 802.11 a/n	Pulse modulation 217 Hz	9 V/m	9 V/m
NOTE: These guidelines may not apply in all situations. Electromagnetic propagation is affected by absorption and reflection from structures, objects and people.					
a For some services, only the uplink frequencies are included.					

Caution

When you dispose of the unit or accessories, you must obey the laws in the relative area or country and the regulations in the relative hospital regarding environmental pollution.

Warning on power connections

Use a proper power cord for your local power supply.

1. Use the approved Power Cord (3-core mains lead) / Appliance Connector / Plug with earthing-contacts that conforms to the safety regulations of each country if applicable.
2. Use the Power Cord (3-core mains lead) / Appliance Connector / Plug conforming to the proper ratings (Voltage, Ampere).

If you have questions on the use of the above Power Cord / Appliance Connector / Plug, please consult a qualified service personnel.

Warning

The apparatus shall not be exposed to dripping or splashing. No objects filled with liquids, such as vases, shall be placed on the apparatus.

Warning

To prevent injury, if mounting the unit using a mounting arm, wall fixture, or other mounting device prepared by the customer, mount the unit securely as described in the instruction manual provided with the mounting device.
Check beforehand that the mounting device used has sufficient strength to support the added weight of the unit.
Check yearly that the mounting device is securely attached.

Caution

When installing, ensure the following space around the periphery of the unit, taking ventilation and servicing into consideration.
– Rear side: 10 cm (4 in.) or more
– Left/Right sides: 10 cm (4 in.) or more
– Bottom side: 5 cm (2 in.) or more
– Top side: 30 cm (11 $^{7}/_{8}$ in.) or more

Consult with qualified personnel for the following types of installation location.
– Wall mount
– Mounting arm

Caution

Do not use the device in a MR (Magnetic Resonance) environment.
It may cause a malfunction, fire, and unwanted movement.

This equipment is not suitable for use in locations where children are likely to be present.

OEV-271MUH/321MUH

Caution

This monitor should only be used with a specified monitor stand.
For information on suitable stands, refer to "Specifications."
Installation of the monitor on any other stands may result in instability, possibly leading to injury.

OEV-431MUH

Caution

- This unit is heavy. Make sure to unpack and move the unit with two or more people.
- Firmly grip the bottom of this unit as shown below.

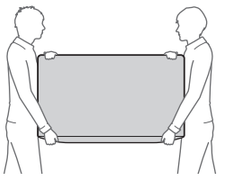

Table of Contents

Precaution **12**
On Safety 12
On Installation 12
Safety precautions for using this unit 12
Precautions when connecting this unit to medical equipment 12
To prolong the life of the unit 12
Cautions for RESPONSIBLE ORGANIZATION when connecting this equipment to IT-NETWORK 12
Use with electrosurgical knives and similar devices 13
Recommendation to Use more than One Unit 13
About the Power Connection 13
LCD image display 13
About the LCD Display Panel 13
On a Long Period of Use 13
On Burn-in 14
About the antireflection film on the LCD display panel 14
On Temperature Error 14
On Security 14
On Cleaning 14
Transportation and Packing 15
Features **16**
Location and Function of Parts and Controls ... **17**
Front Panel..... 17
Input Signals and Adjustable/Setting Items 19
Rear Panel..... 20
Preparation **23**
Connecting 23
Turning on the Monitor/Switching Input Settings 25
Selecting the Menu Language **26**
Using the Menu **27**
Adjustment Using the Menus **29**
Items 29
Adjusting and Changing the Settings 29
Color Tone Adjustment menu 29
Screen Control menu 31
PIP / POP menu 31
Input/Output Configuration menu 32
System Configuration menu 32
Preset menu 34
Troubleshooting **35**
Error Messages **35**
Specifications **36**
OEV-271MUH 36
OEV-321MUH 38
OEV-431MUH 39
Dimensions **44**
OEV-271MUH 44
OEV-321MUH 45
OEV-431MUH 46
Licenses **47**

Trademarks

- The terms HDMI and HDMI High-Definition Multimedia Interface, and the HDMI Logo are trademarks or registered trademarks of HDMI Licensing Administrator, Inc. in the United States and other countries.
- The products or system names appearing in this document are trademarks or registered trademarks of their respective owners. Further, the ® or ™ symbols are not used in the text.
- OLYMPUS is a registered trademark of OLYMPUS CORPORATION.

Precaution

On Safety

- Operate the unit only with a power source as specified in the "Specifications" section.
- The nameplate indicating operating voltage, etc. is located on the rear panel of monitor and the AC adaptor.
- Should any solid object or liquid fall into the cabinet, unplug the unit and have it checked by qualified personnel before operating it any further.
- Unplug the unit from the wall outlet if it is not to be used for several days or more.
- To disconnect the AC power cord, pull it out by grasping the plug. Never pull the cord itself.
- The socket-outlet shall be installed near the equipment and shall be easily accessible.

On Installation

- Prevent internal heat build-up allowing adequate air circulation.
  Do not place the unit on surfaces (rugs, blankets, etc.) or near materials (curtains, draperies) that may block the ventilation holes.
- Do not install the unit near heat sources such as radiators or air ducts, or in a place subject to direct sunlight, excessive dust, mechanical vibration or shock.
- Do not place the monitor near equipment which generates magnetism, such as a transformer or high voltage power lines.

Safety precautions for using this unit

- Viewing images may result in eye strain, fatigue, nausea, or other symptoms of discomfort. It is best to take frequent breaks when viewing content. Because the length and frequency of breaks will differ from person to person, be sure to trust your instincts when deciding to take breaks from viewing. When feelings of discomfort occur, stop viewing the images until the symptoms subside, and consult with a specialist physician if necessary.
- Avoid using this unit while walking or exercising, or in areas that shake violently, as doing so can increase the chances of feelings of discomfort.
- When connecting the unit to medical equipment, refer to "Precautions when connecting this unit to medical equipment".

Precautions when connecting this unit to medical equipment

- Before using this unit for medical purposes, be sure to confirm that use of this unit will not cause symptoms that may interfere with medical practice, such as eye strain, fatigue, and nausea, etc.
- Refrain from using this unit if symptoms occur that interfere with medical practice, or if such symptoms are likely to occur.
- Depending on the conditions of the video input to the unit (e.g., the steadiness, movement speed, and focus position of the video, the distance from subject, the area of the image the user is viewing) and the general health of the user, the user may experience visual fatigue, tiredness, and other discomfort.
- Before starting a medical procedure, make sure that the image from the connected device is displayed correctly on this unit.

To prolong the life of the unit

Turn off the power to preserve the performance when not in use for a prolonged time.

Cautions for RESPONSIBLE ORGANIZATION when connecting this equipment to IT-NETWORK

– connection of the PEMS to an IT-NETWORK that includes other equipment could result in previously unidentified RISKS to PATIENTS, OPERATORS or third parties;
– the RESPONSIBLE ORGANIZATION should identify, analyze, evaluate and control these RISKS;
– subsequent changes to the IT-NETWORK could introduce new RISKS and require additional analysis; and
– changes to the IT-NETWORK include:
  - changes in the IT-NETWORK configuration;
  - connection of additional items to the IT-NETWORK;
  - disconnecting items from the IT-NETWORK;

- update of equipment connected to the IT-NETWORK; and
- upgrade of equipment connected to the IT-NETWORK.

Use with electrosurgical knives and similar devices

If this unit is used together with an electrosurgical knife, etc., the picture may be disturbed, warped or otherwise abnormal as a result of strong radio waves or voltages from the device. This is not a malfunction.
When you use this unit simultaneously with a device from which strong radio waves or voltages are emitted, confirm the effect of this before using such devices, and install this unit in a way that minimizes the effect of radio wave interference.

Recommendation to Use more than One Unit

As problems can occasionally occur for the monitor, when the monitor is used for safety control of personnel, assets or stable picture, or for emergencies, we strongly recommend you use more than one unit or prepare a spare unit.

About the Power Connection

OEV-271MUH/321MUH
Use the supplied power cord or optional AC adaptor.
Do not connect the power cord and optional AC adaptor (AC-300MD) simultaneously.

OEV-431MUH
Use with the supplied AC power cord.

LCD image display

Due the physical characteristics of LCD panels, there may be a decrease in brightness or change in color temperature over a long period of use. These problems are not a malfunction.
In addition, these occurrences will not affect recorded data.

About the LCD Display Panel

- The LCD panel fitted to this unit is manufactured with high precision technology, giving a functioning pixel ratio of at least 99.99%. Thus a very small proportion of pixels may be “stuck”, either always off (black), always on (red, green, or blue), or flashing. In addition, over a long period of use, because of the physical characteristics of the liquid crystal display, such “stuck” pixels may appear spontaneously. These problems are not a malfunction.
- Do not leave the LCD screen facing the sun as it can damage the LCD screen. Take care when you place the unit by a window.
- Do not push or scratch the LCD screen. Do not place a heavy object on the LCD screen. This may cause the screen to lose uniformity.
- If the unit is used in a cold place, a residual image may appear on the screen. This is not a malfunction. When the monitor becomes warm, the screen returns to normal.
- The screen and the cabinet become warm during operation. This is not a malfunction.

On a Long Period of Use

Due to the characteristics of LCD panel, displaying static images for extended periods, or using the unit repeatedly in a high temperature/high humidity environments may cause image smearing, burn-in, areas of which brightness is permanently changed, lines, or a decrease in overall brightness.

In particular, continued display of an image smaller than the monitor screen, such as in a different aspect ratio, may shorten the life of the unit.
Avoid displaying a still image for an extended period, or using the unit repeatedly in a high temperature/high humidity environment such an airtight room, or around the outlet of an air conditioner.

To prevent any of the above issues, we recommend reducing brightness slightly, and to turn off the power whenever the unit is not in use.

On Burn-in

For LCD panel, permanent burn-in may occur if still images are displayed in the same position on the screen continuously, or repeatedly over extended periods.

Images that may cause burn-in
- Masked images with aspect ratios other than 16:9
- Color bars or images that remain static for a long time
- Character or message displays that indicate settings or the operating state

To reduce the risk of burn-in
- Turn off the character displays
  Press the MENU button to turn off the character displays. To turn off the character displays of the connected equipment, operate the connected equipment accordingly. For details, refer to the operation manual of the connected equipment.
- Turn off the power when not in use
  Turn off the power if the monitor is not to be used for a prolonged period of time.

About the antireflection film on the LCD display panel

The LCD display panel is coated with an antireflection film to reduce reflections on the display panel. Do not remove the film.

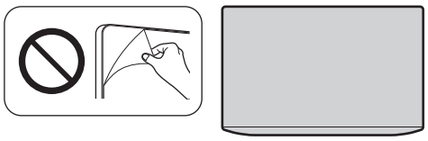

On Temperature Error

When this unit is used in a high temperature environment and the internal temperature rises, a temperature error is displayed on the screen. When the temperature error is displayed, contact an authorized dealer.

On Security

Consult with qualified personnel for security information.

- SONY WILL NOT BE LIABLE FOR DAMAGES OF ANY KIND RESULTING FROM A FAILURE TO IMPLEMENT PROPER SECURITY MEASURES ON TRANSMISSION DEVICES, UNAVOIDABLE DATA LEAKS RESULTING FROM TRANSMISSION SPECIFICATIONS, OR SECURITY PROBLEMS OF ANY KIND.
- Depending on the operating environment, unauthorized third parties on the network may be able to access the unit. When connecting the unit to the network, be sure to confirm that the network is protected securely.
- This product is used with a leased line or intranet connection. Do not connect to an external network, as security issues may occur.

On Cleaning

Before cleaning
Be sure to disconnect the AC power cord from the AC outlet.

On cleaning the monitor
A material that withstands disinfection is used for the front protection plate of the medical use LCD monitor. The protection plate surface is specially treated to reduce reflection of light. When solvents such as benzene or thinner, or acid, alkaline or abrasive detergent, or chemical cleaning cloth are used for the protection plate surface/monitor surface, the performance of the monitor may be impaired or the finish of the surface may be damaged. Take care with respect to the following:
- Clean the protection plate surface/monitor surface with the following method.
  Wipe the protection plate surface gently (wipe using less than 1 N force).

Drugs (concentration)	Examples of product names*
Isopropyl alcohol (50 to 70 v/v%)	• Isopropanol Disinfectant Solution 70% • PDI Super Sani-Cloth Germicidal Disposable Wipe
Ethanol (76.9 to 81.4 v/v%)	Japanese Pharmacopoeia Ethanol for disinfection
Sodium hypochlorite (0.05 w/v%)	Jiaen 6% “Yoshida” (0.05 w/v%)
Benzalkonium Chloride (0.2 w/v%)	Osvan S (0.2 w/v%)
Benzethonium chloride (0.2 w/v%)	Hyamine Solution 10% (0.2 w/v%)
Alkyldiaminoethylglycine hydrochloride (0.2 w/v%)	Alkyldiaminoethylglycine disinfectant solution 10% “Nichiiko” (0.2 w/v%)

* Examples of product names for drugs. Availability depends on where you live. Use an appropriate drug by referring to the drug information.

- Stubborn stains may be removed with a soft cloth such as a cleaning cloth lightly dampened with mild detergent solution using a swab method and then clean using the above chemical solution.
  Never use solvents such as benzene or thinner, or acid, alkaline or abrasive detergent, or chemical cleaning cloth for cleaning or disinfection, as they will damage the protection plate surface/monitor surface.
- Do not use unnecessary force to rub the protection plate surface/monitor surface with a stained cloth. The protection plate surface/monitor surface may be scratched.
- Do not keep the protection plate surface/monitor surface in contact with a rubber or vinyl resin product for a long period of time. The finish of the surface may deteriorate or the coating may come off.
- After cleaning, visually check that there is no dirt.
  If there is dirt remaining, clean repeatedly. If the dirt does not come off, contact an authorized dealer.

Transportation and Packing

OEV-271MUH/321MUH

- Make sure to move the unit with both hands firmly gripping the bottom of the display.
  Dropping it may cause injury or malfunction.
- Do not throw away the carton box and packing materials. They make an ideal container to transport the unit for repairs or moving.
  If you have any questions about this unit, contact your authorized dealer.

OEV-431MUH

- Make sure to move the unit with two or more people firmly gripping the bottom of the display.
  Dropping it may cause injury or malfunction.
- Do not throw away the carton box and packing materials. They make an ideal container to transport the unit for repairs or moving.
  If you have any questions about this unit, contact your authorized dealer.

About this manual

The instructions in this manual are for the following models:

- OEV-271MUH
- OEV-321MUH
- OEV-431MUH

The illustration of OEV-321MUH is used for the explanations. Any differences in specifications are clearly indicated in the text.

Features

This monitor displays color video images that are output from medical imaging systems on the LCD panel.
LCD panel consists of liquid crystal, color filters, and LED backlights.
The panel displays images by controlling the liquid crystal and backlights according to input signals.

Compliance with medical safety standards in the U.S.A.

IEC 60601-1 and product safety standards in the U.S.A. have been obtained for this monitor.
The monitor is designed for use in the medical treatment field, with the sheet switch, screen protect panel, etc.

High brightness/high-resolution 4K panel

A 4K high-resolution (3840 × 2160) panel and wide field of view technology enables you to use the monitor under various lighting conditions and in numerous ways (installing on the wall, using several monitors to view an image, etc.).
Because a color filter with wide-color reproduction and LCD materials with high response speed are used, the motion picture of the video signal is displayed more clearly.

Control panel

Assigns functions frequently used during an operation to buttons on the front surface of the monitor. The panel provides an user interface superior in operability through navigation by luminescent colors and status of the buttons.

Flat surface for better maintenance

The design allows the user to easily wipe liquids and gel off the LCD panel and control buttons – ensuring a high standard of disinfection and cleanliness.

Location and Function of Parts and Controls

Front Panel

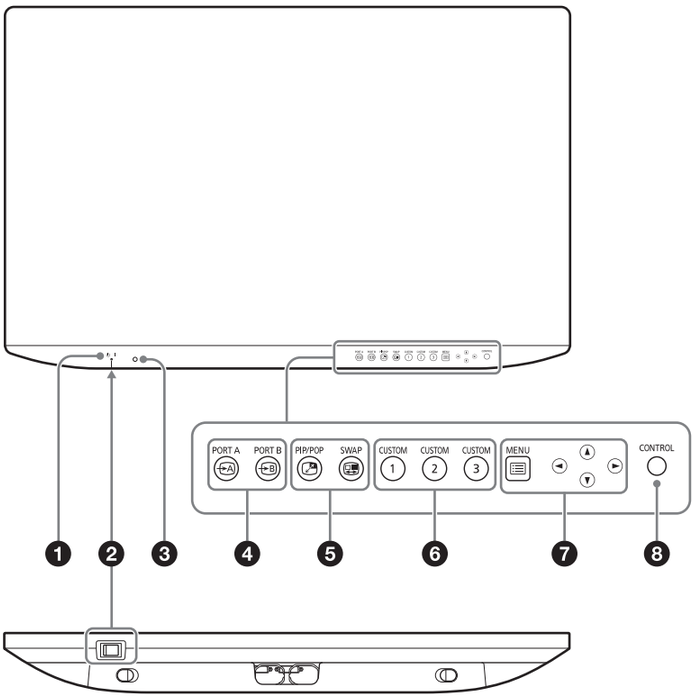

❶ Power indicator

Indicator	Operating State
Green	Power on
Flashes in Green	Power on with image displayed (reduced backlight due to high temperature)
Orange	Standby
Flashes in Orange	No image displayed (remote standby)

❷ I (On) ⏻ (Standby) switch

Press the **I** side to turn the monitor on. Press the ⏻ side to switch the unit to standby state.

❸ Light sensor

When the brightness auto adjustment function is set to "On," the light sensor detects the surrounding brightness, and the brightness of the display is adjusted automatically.

Notes

- If the light sensor is blocked, the brightness auto adjustment function may not work. When the display seems to be dark compared to the surrounding brightness, check if the light sensor is blocked.
- The effect of the brightness auto adjustment may be different or difficult to see depending on the monitor settings.

❹ Input select buttons

PORT A/PORT B: Each input connector can be assigned for PORT A/B.
SDI is assigned for PORT A/B in the default setting.
When you press PORT A or PORT B when it is lit in green, a menu for selecting the input connector assigned to the PORT A/B is displayed.
When you press PORT A or PORT B when it is lit in white, an image from the input connector assigned to the PORT A/B is displayed.

❺ Multi-image display setting buttons

PIP/POP: For displaying the multi-image display or switching the multi-image display mode.

SWAP: For swapping between the main display and the sub display.

❻ CUSTOM buttons

Turns on or off the assigned function. You can adjust the assigned function by pressing the ◀/▶ buttons. (Refer to the Custom Button of the System Configuration menu on page 34.)

Note

The initial setting may differ according to the model you use.
For details contact an authorized dealer.

❼ OSD menu operation buttons

MENU button

Press to display the on-screen menu.
Press again to hide the menu.

▲/▼/◀/▶ buttons

Press to select the items and setting values.

❽ ○ CONTROL button

Displays or hides the operation buttons on the front panel.
Selects the items depending on the menu types.

Input Signals and Adjustable/Setting Items

Item	Input signal						
	HDMI		Display Port		SDI	DVI-D	
	Video	PC	Video	PC	SDI	Video	PC
Gamma 1)	○	○	○	○	○	○	○
Phase	○	○	○	○	○	○	○
Chroma	○	○	○	○	○	○	○
Brightness	○	○	○	○	○	○	○
Contrast	○	○	○	○	○	○	○
Color Temperature	○	○	○	○	○	○	○
Gain R/G/B Offset	○	○	○	○	○	○	○
Bias R/G/B Offset	○	○	○	○	○	○	○
Mono	○	○	○	○	○	○	○
Sharpness H	○	○	○	○	○	○	○
Sharpness V	○	○	○	○	○	○	○
RGB Range	○	○	○	○	×	○	○
Color Space 1)	○	○	○	○	○	○	○
4K Scan Size 2)	○	○	○	○	○	×	×
HD Scan Size 3)	○	○	○	○	○	○	○
SD Scan Size	○ 4)	× 5)	○ 4)	× 5)	○ 4)	○ 4)	× 5)
Underscan	○	○	○	○	○	○	○
4K Zoom	○ 2)	○ 2)	○ 2)	○ 2)	○ 2)	×	×
Flip Pattern	○	○	○	○	○	○	○
SD Aspect	○ 4)	× 5)	○ 4)	× 5)	○	○ 4)	× 5)
HDMI Signal Format	○	○	×	×	×	×	×
HDR Lock	×	×	○	○	×	×	×
I/P Mode	×	×	×	×	○ 6)	×	×

○ : Can be adjusted/set
× : Cannot be adjusted/set

1) "Auto" is available only for the HDMI input connector and SDI input connector.
2) Reflected on the screen only when the 4K equivalent signal is input.
3) Reflected on the screen only when the HD signal is input.
4) Reflected on the screen only when the SD signal is input.
5) The setting value can be changed but is not applied to the screen when the PC signal is input.
6) The setting value can be changed but is not applied to the screen when the 4K equivalent signal is input.

Rear Panel

To use the connectors on the rear panel, remove the cable cover. For details on the cable cover, see page 23.

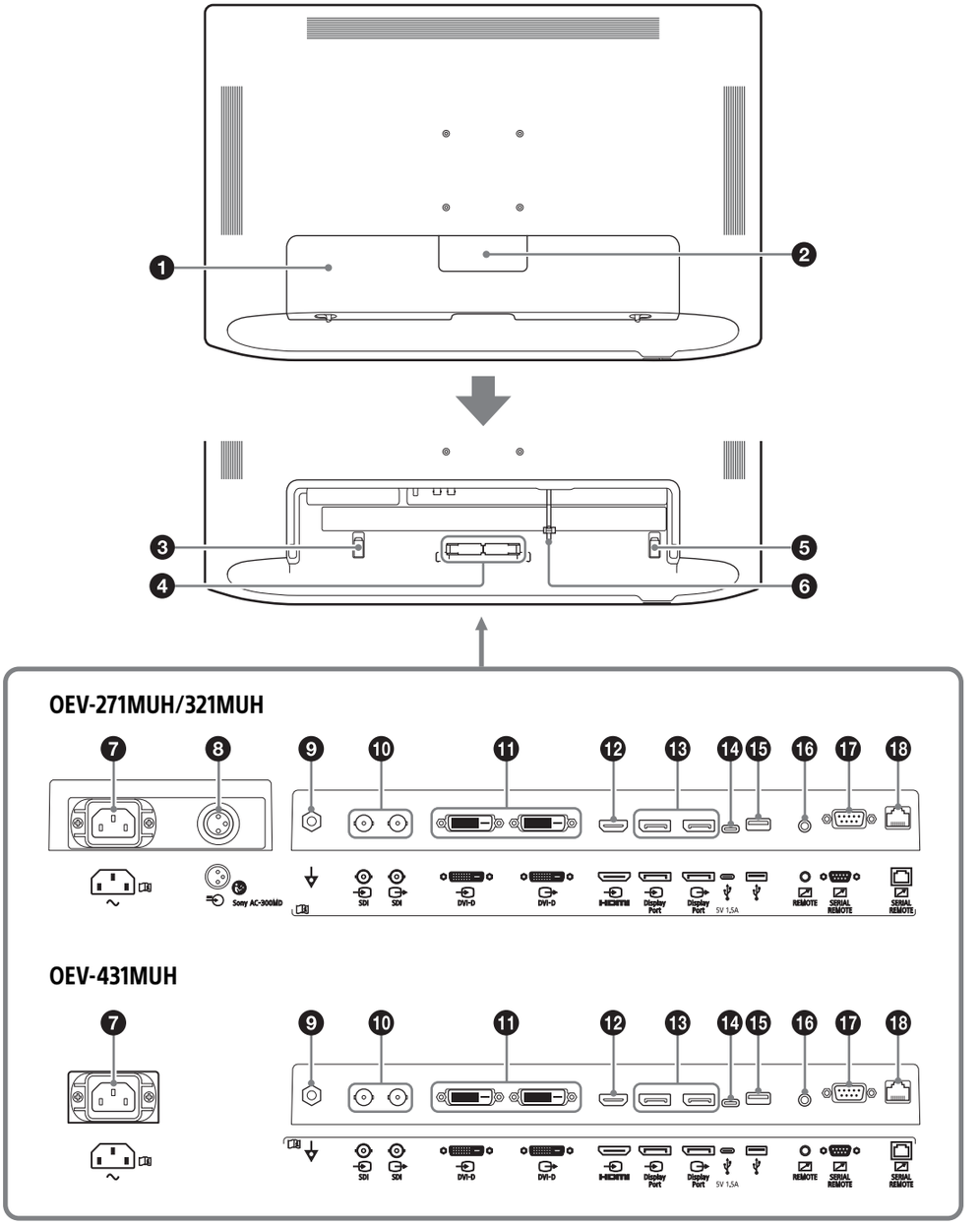

❶ Cable cover (L)
When connecting or disconnecting the cable of the connector on the rear panel, remove this cover.
Make sure to disconnect the power cord before connecting or disconnecting connectors.

❷ Cable cover (S)
Removing this cover makes a small opening on the cable cover (L) for the connection cable to pass through.

❸ **AC power cord holder**
Secures the AC power cord.

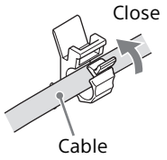

❹ **Cable holder**
Secures the connected cables.

Note

When pulling out the connected cables from the bottom of the unit, secure the cables with the cable holder and then attach the cable cover (L).

❺ **USB cable holder**
Secure the USB cable used to connect an external device to the USB 5V/1.5A connector (Type C).

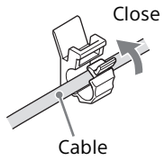

❻ **HDMI cable holder**
Secures the HDMI cable (Ø8 mm or less).
Slide the clamper to adjust the position.

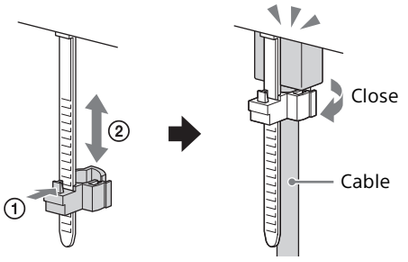

❼ **∿ AC input connector [1]**
Connects the supplied AC power cord.

❽ **(DC input) connector [1] (OEV-271MUH/321MUH)**
Connects the DC connector of the optional AC adaptor.

1) Slide the shutter to select either one of the input connectors.

Warning
For the DC power supply, make sure to use the optional AC adaptor, AC-300MD.
If another power supply is used, there is a risk of fire or electric shock.

❾ **(Equipotential) terminal**
Connects the equipotential plug.

❿ **SDI input/output connector (BNC type)**
input connector (SDI)
Input connector for serial digital component signals (4K/HD/SD).
output connector (SDI)
Active through output connector for serial digital component signals (4K/HD/SD).

Recommended cables
12G-SDI or 6G-SDI: Coaxial cable L-5.5CUHD manufactured by Canare Electric Co., Ltd. or an equivalent cable
3G-SDI: Coaxial cable L-5CFB manufactured by Canare Electric Co., Ltd. or an equivalent cable
HD-SDI: Coaxial cable L-5CFB manufactured by Canare Electric Co., Ltd. or an equivalent cable
SD-SDI: Coaxial cable L-5CFB manufactured by Canare Electric Co., Ltd. or an equivalent cable

Notes

- An SDI signal is output from the output connector only when the monitor is turned on. When the monitor is turned off, the signal is not output from the output connector.
- Be sure to connect equipment or cables specified by Instructions for Use of this monitor to the SDI output connectors. If you connect unspecified equipment or cables, the monitor may affect the operation of the connected equipment.

⓫ **DVI-D input/output connector**
input connector (DVI-D)
Input connector for DVI Rev.1.0 applicable digital signal.
output connector (DVI-D)
Active through output connector for the DVI digital signal.
The signal protected by HDCP [2] is not output.

2) HDCP (High-bandwidth Digital Content Protection) is a copyright protection technology using encryption technology of digital video signals.

Notes

- A signal is output from the connector only when the monitor is turned on. When the monitor is turned off, the signal is not output from the connector.
- The DVI-D input/output connector is not compatible with the 4K equivalent signal. For details, refer to "Available signal formats" on page 41.

⓬ HDMI input connector
Inputs the HDMI signals.
Use the Premium High Speed cable that is shorter than 3 m (meters) with the cable-type logo.

⓭ Display Port input/output connector
input connector (Display Port)
Input connector for Display Port signals.
output connector (Display Port)
Active through output connector for Display Port signals.

Display Port is an interface developed by VESA that supports transfer of both video and audio digital signals on a single cable.
Use the DisplayPort standard version 1.2-certified cable.

Note

Consult with qualified personnel for Display Port output connector use.

Note

This monitor does not support Display Port audio signals.

⓮ USB 5V/1.5A connector (Type C)
Connects external equipment. Used to supply voltage of DC 5 V.

⓯ USB connector (Type A)
Connects the USB memory.
For importing/exporting data. For details, refer to page 34.

Warning

Using this unit for medical purposes
The connectors on this unit are not isolated.
Do not use any USB memories other than those specified.
Connecting a device that operates on an AC power supply may result in an influx of leakage currents from the connected device, which may in turn result in electric shocks to the patient and operator.

Note

Only USB memory devices of up to 64 GB formatted in FAT16 or FAT32 can be connected.
Do not connect other USB devices.

⓰ REMOTE connector (Stereo mini jack)
The monitor can be operated partially by connecting external equipment.

⓱ SERIAL REMOTE (RS-232C) connector (D-sub 9-pin, female)
Connect to the RS-232C control connector on the external equipment connected to the monitor.
The monitor can be operated according to control commands sent from connected external equipment.

⓲ SERIAL REMOTE connector (RJ-45)
The monitor can be operated according to control commands sent from connected external equipment.
Connect to the LAN (100/1000) connector of the network by using a 100BASE-TX/1000BASE-T LAN cable (non-shielded type of category 5e or more, optional).

Note

Consult with qualified personnel at using this connector.

Caution

For safety, do not connect the connector to peripheral device wiring that might have excessive voltage.
Follow the instructions for use for this port.

Caution

Do not come into contact with this terminal and patients at the same time.
Doing so may result in a generation of voltage that can be harmful to patients if the unit is malfunctioning.
Always disconnect the power cord before connecting and disconnecting connectors.

Note

The connection speed may be affected by the network system. This unit does not guarantee

the communication speed or quality of 100BASE-TX/1000BASE-T.

Warning

Using this unit for medical purposes

The connectors on this unit are not isolated.
Do not connect any device other than one which conforms to IEC 60601-1 standards.
When an information technology device or AV device that uses an alternating current is connected, current leakage may result in an electric shock to the patient or operator.
If use of such a device is unavoidable, isolate its power supply by connecting an isolation transformer, or by connecting an isolator between the connecting cables.
After implementing these measures, confirm that the reduced risk now conforms to IEC 60601-1 standards.

Preparation

Connecting

1 Make sure that the **I** (On) ⏻ (Standby) switch is set to ⏻ (Standby).

2 Remove the cable cover (L).

Slide down the cable cover (L) while sliding the slide locks (2 pcs), which are located at the bottom of the monitor, in the direction of the arrow.

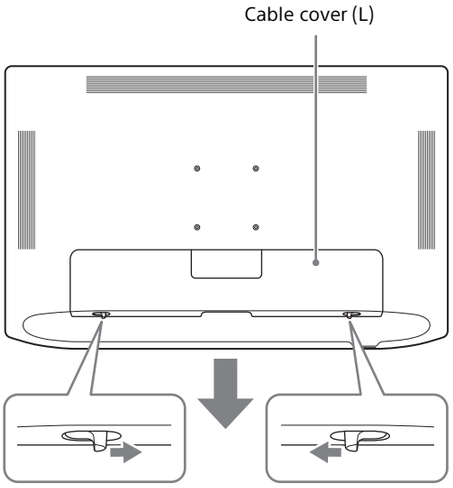

Note

Do not forcibly pull cable covers. Otherwise, the cable covers may be damaged or the monitor may fall over.

3 Connect the connection cable.

The connection cable should be wired with the cable holder.

4 Connect the AC power cord.

OEV-271MUH/321MUH

Note

Avoid plugging the AC power cord into the AC input connector while connecting the optional AC adaptor (AC-300MD) to the DC input connector.

When using the supplied AC power cord
Slide the shutter of the AC power connector to show the AC input connector, and plug the AC power cord into the AC input connector.

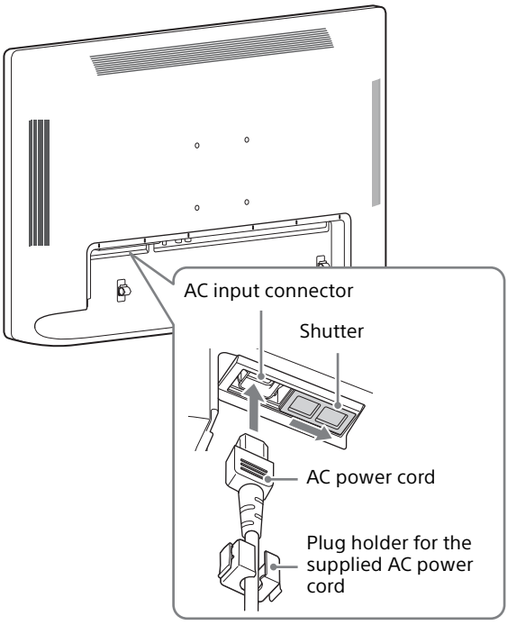

When using the optional AC adaptor
Slide the shutter to show the DC input connector and insert the DC connector to the DC input connector until it locks.

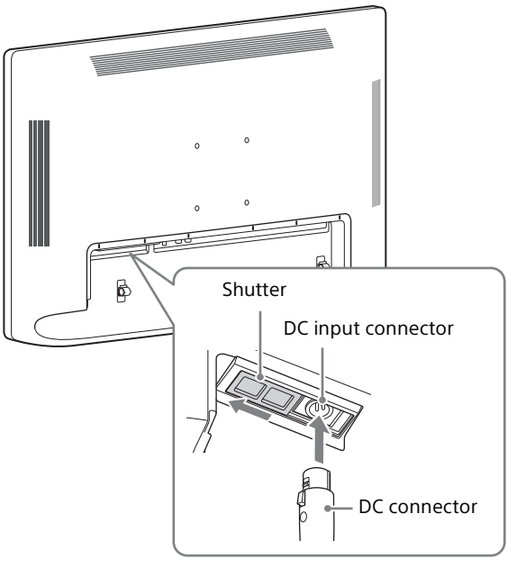

Then, plug the AC power cord into the optional AC adaptor.

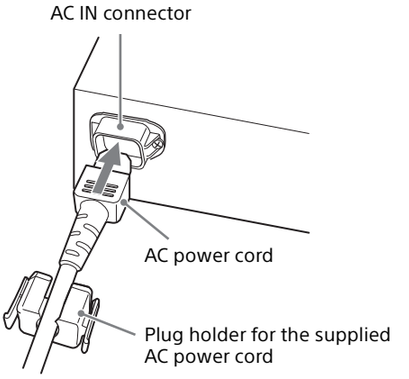

Note

When using the AC power cord, make sure to use the supplied plug holder for the AC power cord and insert it until the fixing lever locks. When using the AC adaptor, insert the DC connector into the monitor until it locks. Otherwise, the cable may fall out and the image may disappear.

OEV-431MUH

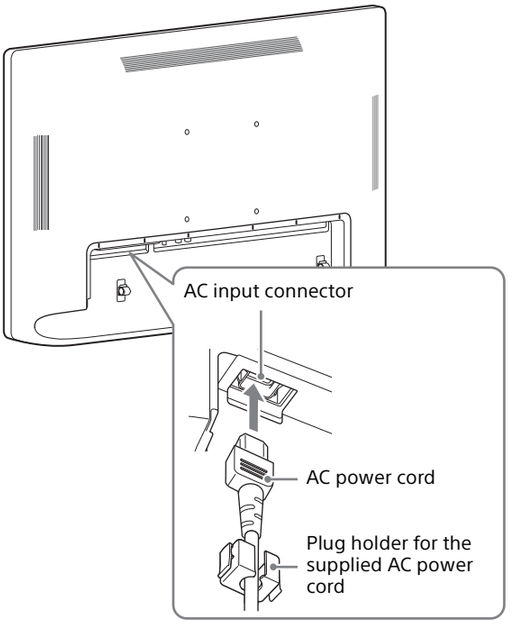

5 Slide the cable cover (S) in the direction of the arrow to remove it.

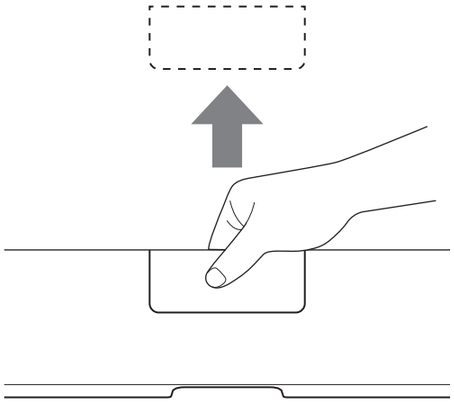

Notes

- When the cable cover (S) is removed, it can be used as a cable outlet for the connection cable and AC power cord.
- To prevent losing the removed cable covers, store them appropriately.
- To attach the cable covers, slide the covers in the opposite direction from when you removed them.

6 Attach the cable cover (L).

Slide the cable cover (L), while sliding the slide locks (2 pcs), which are located at the bottom of the monitor, in the reverse direction of step 2.

Notes

- After attaching the cable cover (L), check that the slide locks (2 pcs) return to the original position. The cable cover (L) may fall off if it is improperly locked.
- If you use a connection cable that is bigger than the cable holder or cable cover and it cannot be fit in, do not secure it in the cable holder and use the cable with the cable cover removed.

Caution

This unit with the cable covers attached conforms to the waterproofed standard. (Refer to "Specifications")
Be sure not to use the unit with the cable covers removed since waterproofed performance is not guaranteed.

Cautions for splash-proof performance

Splash-proof test has been conducted only on water.
Splash-proof performance against liquids such as drugs and body fluids is not ensured.
If liquids that are assumed to cause risks such as an infection have entered the unit, dispose of the unit according to the regulations of the country, region, and hospital.

To unplug the AC power cord

Press the **I** (On) ⏻ (Standby) switch to the ⏻ (Standby) side to set the unit to the standby state, then unplug the AC power cord from the AC power plug holder by holding both sides of the fixing levers of the holder to release the lock.

OEV-271MUH/321MUH

When the optional AC adaptor is used, set the unit to the standby state, then unplug the AC power cord from the AC adaptor before disconnecting the DC connector from the unit.

Turning on the Monitor/Switching Input Settings

1 Connect the plug of the AC power cord to an AC outlet.

2 Press the **I** (On) ⏻ (Standby) switch to the **I** (On) side to turn on the monitor.

The power indicator on the front panel lights in green.

3 Switch the input settings.

If the desired image is not displayed, press the CONTROL button to show the operation buttons on the front panel, then press PORT A or PORT B.

Note

For details on switching the input settings, refer to "Location and Function of Parts and Controls" on page 17 or "Input/Output Configuration menu" on page 32.

Selecting the Menu Language

Notes

- The menus displayed on this document may be different from the ones that appear in actual use.
- The illustration of OEV-321MUH is used for the explanations.

You can select the display language for menus and messages from “English,” “中文,” “日本語,” “Italiano,” “Español,” “Deutsch,” “Français,” or “Русский.”

Note

If the “Control Lock” has been turned on, all items are displayed in gray. To change any of the items, turn the “Control Lock” to “Off” first.
For details on the Control Lock, see page 32.

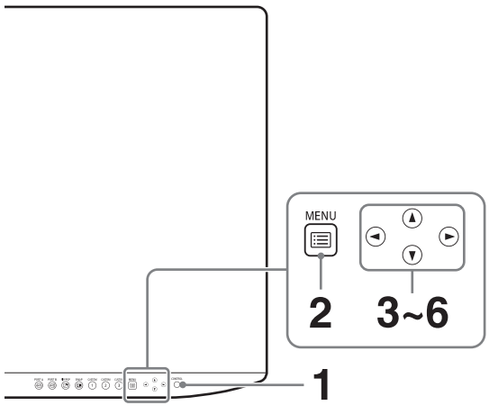

1 Press the CONTROL button.

The operation buttons are displayed.

2 Press the MENU button.

The menu-selecting screen appears.
The menu presently selected is shown in blue.
Only “System Configuration” can be selected for the factory setting. To change the setting of other items, set “Control Lock” in the “Control Lock” menu to “Off” by referring the following steps 3 to 5.

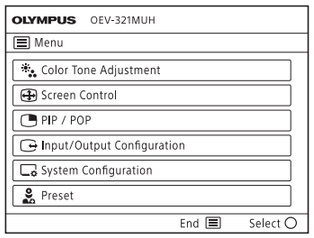

3 Press the ▲/▼ button to select “System Configuration,” then press the CONTROL button.

The “System Configuration” menu appears.

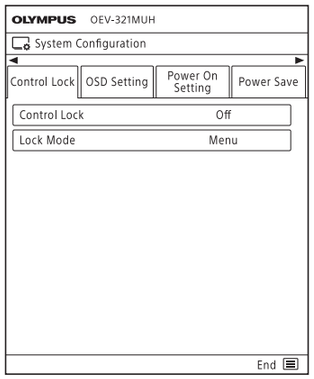

4 Press the ◀/▶ button to select the “OSD Setting” tab.

The “OSD Setting” menu appears.

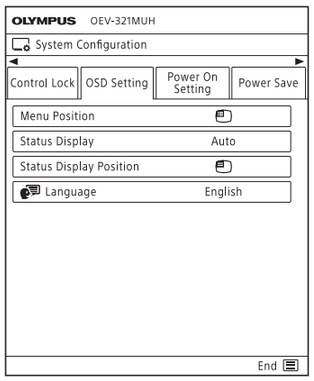

5 Press the ▲/▼ button to select “Language.”

The selected item is displayed in blue.

6 Press the ◀/▶ button to select a language.

The menu changes to the selected language.

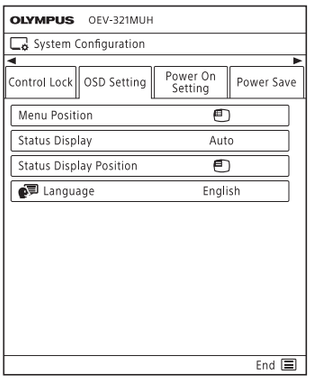

To hide the menu

Press the MENU button.
The menu disappears automatically if a button is not pressed for one minute.

Using the Menu

Notes

- The menus displayed on this document may be different from the ones that appear in actual use.
- The illustration of OEV-321MUH is used for the explanations.

The unit is equipped with an on-screen menu for making various adjustments and settings such as picture control, input setting, setting change, etc.

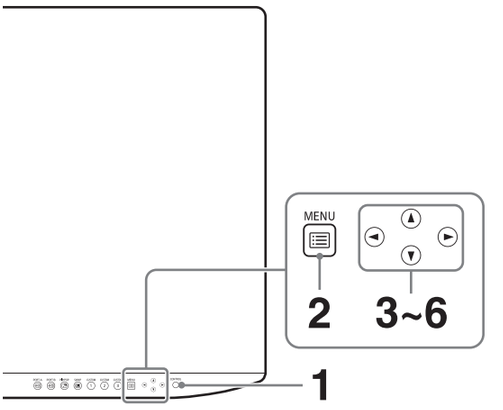

1 Press the CONTROL button.

The operation buttons are displayed.

2 Press the MENU button.

The menu-selecting screen appears.
The menu presently selected is shown in blue.

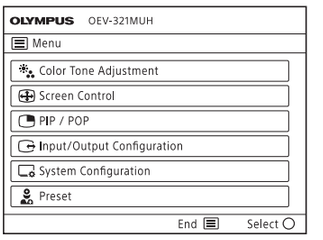

3 Press the ▲/▼ button to select a menu.

When you press the ▶ or CONTROL button, the selected menu appears and setting items of the selected tab are displayed.

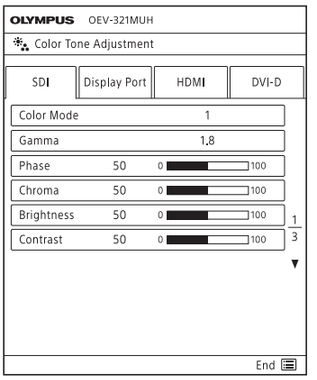

4 Press the ◀/▶ button to select the tab.

The selected tab is shown in blue, and setting items of the selected tab appear.

5 Select an item.

Press the ▲/▼ button to select the item.
The item to be changed is displayed in blue.

6 Make the setting or adjustment on an item.

When changing the adjustment level:
To increase the number, press the ▶ button.
To decrease the number, press the ◀ button.
When selecting the setting:
Press the ◀/▶ button to select the setting.

Note

If the Control Lock is set to "On," the setting cannot be changed.
For details about Control Lock, see page 32.

To hide the menu

Press the MENU button.
The menu disappears automatically if a button is not pressed for one minute.

To hide the operation buttons

Press the CONTROL button.

About the storage of the settings

The adjusted settings are automatically stored in the monitor memory.
For details on settings for the next power-on, refer to "Power On Setting" (page 33) in the System Configuration menu.

About the control navigation

Depending on the state, the operation buttons of the unit light as shown below:
White light: Operable state.
Green light: Operating state.
Off: Unable to operate.

Adjustment Using the Menus

Items

The screen menu of this monitor consists of the following items.

Color Tone Adjustment (page 29)

Color Mode
Gamma
Phase
Chroma
Brightness
Contrast
Color Temperature
Gain R Offset
Gain G Offset
Gain B Offset
Bias R Offset
Bias G Offset
Bias B Offset
Mono
Sharpness H
Sharpness V
RGB Range
Color Space
HDR Lock
I/P Mode

Screen Control (page 31)

4K Scan Size
HD Scan Size
SD Scan Size
Underscan
4K Zoom
Flip Pattern
SD Aspect
HDMI Signal Format
Underscan Skip
Flip Pattern Skip

PIP / POP (page 31)

Clipping Size
Sub Screen Position
Pattern Skip

Input/Output Configuration (page 32)

Port A Input Select
Port B Input Select
Input Name
User Input Name
Power Supply
HDCP Setting

System Configuration (page 32)

Control Lock
OSD Setting
Power On Setting
Power Save
Serial Remote
Remote
Ethernet Setting
Custom Button
Panel Display
Monitor Information

Preset (page 34)

Load Preset
Load User Setting
Save User Setting
User Name
Load Default
Default Preset
USB Import
USB Export

Adjusting and Changing the Settings

Color Tone Adjustment menu

The Color Tone Adjustment menu is used to adjust picture quality for each input.
You need to use the measurement instrument to adjust the color temperature.
Recommended: Konica Minolta color analyzer CA-310 or equivalent

Menu	Setting
Color Mode	Select the preset color mode from “1” to “40.”
Gamma	Select the appropriate gamma mode from “1.8,” “2.0,” “2.2,” “2.4,” “2.6,” “DICOM,” “Endoscope,” “HLG,” “PQ,” or “Auto.” “DICOM” is for reference, not for diagnostic purposes. Select “HLG” when the input signal is HDR-HLG. “Auto” is available only for the SDI input connector and HDMI input connector.
Phase	Adjusts color tones. The higher the setting, the more greenish the picture. The lower the setting, the more purplish the picture.

Menu	Setting
Chroma	Adjusts color intensity. The higher the setting, the greater the intensity. The lower the setting, the lower the intensity.
Brightness	Adjusts brightness.
Contrast	Adjusts contrast.
Color Temperature	Select the color temperature from “D65,” “D93,” or “D75.” **Note** If the setting is changed, Gain R/G/B Offset and Bias R/G/B Offset are restored to 0 respectively.
Gain R Offset Gain G Offset Gain B Offset	Adjust color temperature in detail, and color balance (Gain).
Bias R Offset Bias G Offset Bias B Offset	Adjust color temperature in detail, and color balance (Bias).
Mono	Sets the display to a monochrome picture. Set to “On” for a monochrome picture, set to “Off” for a normal (chromatic) picture.
Sharpness H	Adjusts the horizontal sharpness. The higher the setting, the sharper the picture. The lower the setting, the softer the picture.
Sharpness V	Adjusts the vertical sharpness. The higher the setting, the sharper the picture. The lower the setting, the softer the picture.
RGB Range	Select the RGB signal range from “Auto,” “Limited,” or “Full.” If you set to “Auto,” this item is set to “Limited” when inputting video signals, and “Full” when inputting PC signals.
Color Space	Select the color gamut from “Auto,” “BT.709,” or “BT.2020.” “Auto” is available only for the SDI input connector, and HDMI input connector.

Menu	Setting
HDR Lock	Sets the HDR Lock to “Off” or “On.” Available only for the Display Port input connector. **Note** If you set HDR Lock to “On,” the following settings are fixed. It is possible to change the settings, but they are not applied to the screen. In addition, the power supply selected in the “Power Supply” setting of the Input/Output Configuration menu is not available. • Color Tone Adjustment: Gamma, Phase, Chroma, Brightness, Contrast, Color Temperature, Gain R/G/B Offset, Bias R/G/B Offset, Mono, Sharpness H, Sharpness V, RGB Range, Color Space • Screen Control: 4K Scan Size, HD Scan Size, SD Scan Size, Underscan, 4K Zoom, Flip Pattern • Input/Output Configuration: DC Output Select, Power Supply Port Select • System Configuration: Energy Saving Mode, Backlight, Backlight Control, Brightness Auto Adjustment
I/P Mode	Set to minimize delay due to image processing in the monitor by inputting signals to the SDI connector 1). • Mode1: Prioritizes picture quality. Image processing time will be longer than when set in “Mode2” or “Mode3.” The factory default is “Mode1.” • Mode2 2): Shortens image processing time depending on the signal format. • Mode3 2) 3): Minimizes image processing time. However, when the interlace signal is mainly input, the same processing as “Mode2” is performed. 1) When a 4K equivalent signal is being input, the I/P Mode can be changed, but there is no change in delay due to image processing. 2) When an interlace signal is being input, jittering, flickering, or ghosting may occur in the images. 3) When used with other devices, such as electrosurgical knife, image irregularity or distortion may occur and/or the monitor may fail to operate correctly.

Screen Control menu

The Screen Control menu is used to set the image display setting for each input.

Note

When displaying the multi-image display, “4K Scan Size,” “HD Scan Size,” “SD Scan Size,” and “Underscan” are available only in the main screen of PIP view.

Menu	Setting
4K Scan Size	Select the scan size for the display of the 4K equivalent signal from “Off,” “Mode7,” or “Mode8.”
HD Scan Size	Select the scan size for the HD signal display from “Off,” “Mode2” to ”Mode6.”
SD Scan Size	Select the scan size for the SD signal display from “Off,” or “Mode1.”
Underscan	Select the underscan setting from “Off,” “80%,” “85%,” “90%,” or “95%.” **Note** Settings of “4K Scan Size,” “HD Scan Size,” and “SD Scan Size” are not available while displaying with underscan.
4K Zoom	Select the display magnification of video signals from “Off,” “x1.2,” “x1.5,” or “x2.0.” **Notes** • Zoom is available only for the 4K equivalent signal. • Settings of “4K Scan Size” and “Underscan” are not available while displaying with 4K Zoom.
Flip Pattern	Select the pattern which flips and displays the image from “Off,” “Mirror,” or “Rotation.”
SD Aspect	Select the aspect ratio of the SD signal display from “4:3,” or “16:9.”
HDMI Signal Format	Select the HDMI signal format from “Standard Format,” or “Enhanced Format.” • Standard Format: Select to use for a standard HDMI format signal. • Enhanced Format: Select to use for a high-resolution HDMI format signal 1) or HDR-compatible HDMI format signal. 1) Signals in resolutions of 3840 × 2160 or 4096 × 2160 are listed below: 4:4:4 RGB/YCbCr-50P/60P-8bit signals 4:2:2 YCbCr-50P/60P-12bit signals 4:4:4 RGB/YCbCr-25P/30P-10bit signals **Notes** • Images may not be output correctly with “Enhanced Format.” In that case, select “Standard Format.” • To display the corresponding signal with “Enhanced Format,” use a Premium High-Speed HDMI cable within a length of 3 meters.
Underscan Skip	Sets the reduction ratio for the underscan to skip when switching functions with the Foot Switch.
Flip Pattern Skip	Sets the flip pattern to skip when switching functions with the Foot Switch or CUSTOM buttons. **Note** “Mirror” is set to be skipped in the default setting.

PIP / POP menu

The PIP / POP menu is used to set the display mode for the multi-image display and for each input.

Menu	Setting
Clipping Size	The clipping size can be set when using the multi-image display. • HD signal: Select from “Normal,” “4:3,” “5:4,” “Square1,” “Square2,” “Square3,” “Square4,” “Square5,” or “V Full.” • 4K equivalent signal: Select from “Normal” or “V Full.” **Note** “V Full” is applied to the main/sub screen of POP1 for the multi-image display.
Sub Screen Position	
PIP	Sets the sub screen position for the multi-image display (PIP).
POP	Sets the sub screen position for the multi-image display (POP).
Pattern Skip	Sets the pattern that is skipped when changing the displaying pattern by pressing the PIP/POP button on the front panel or the Foot Switch while displaying the multi-image display. Set to “Not Skip” or “Skip” for the PIP1, PIP2, POP1, or POP2 pattern.

Input/Output Configuration menu

Menu	Setting
Port A Input Select	Sets the input connector that is skipped when changing the input signal by pressing the PORT A button. Set to “Not Skip” or “Skip” for the SDI, Display Port, HDMI, DVI-D input connector.
Port B Input Select	Sets the input connector that is skipped when changing the input signal by pressing the PORT B button. Set to “Not Skip” or “Skip” for the SDI, Display Port, HDMI, DVI-D input connector.
Input Name	Set the name of the SDI, Display Port, HDMI, DVI-D input connector. • Endoscope • Laparoscope • Ultrasound • Recorder • Printer • PACS • C-arm • CAD • Surgical Camera • Microscope • Vital Device • (User Input Name)
User Input Name	Registers the unique strings of characters for Input Name. The default values are Input1, Input2, Input3, and Input4.
Power Supply	
DC Output Select	Sets the DC output to “Off” or “On.”
Power Supply Port Select	When the 5 V output power of the DVI-D input connector is output, select “DVI-D.” Select “Off” when the power is not output.
HDCP Setting	Sets the HDCP setting for signals input to the DVI-D input connector. • Disable: Sets to use the signals not protected with HDCP. Signals are output from the DVI-D output connector only when the HDCP Setting is set to “Disable” with the signals not protected with HDCP. • Enable: Sets to use the signals protected with HDCP. **Note** When “Disable” is set for the signals protected with HDCP, images are not displayed.

System Configuration menu

Menu	Setting
Control Lock	
Control Lock	Set when you want to limit the operation of the control panel. Set to “Off” for no limit, “On” to limit.
Lock Mode	Sets the range to limit the operation of the control panel. This setting is available when “Control Lock” is set to “On.” • Menu: Limits the menu operations other than the control lock setting. • Menu&Button: Limits all operations other than the control lock setting.
OSD Setting	
Menu Position	Sets the screen position for the OSD menu.
Status Display	Select Port, Input Connector Name, Control Lock, Signal Format, Scan Size, 4K Zoom, Underscan, Flip Pattern, PIP/POP Mode, and Energy Saving Mode are displayed.

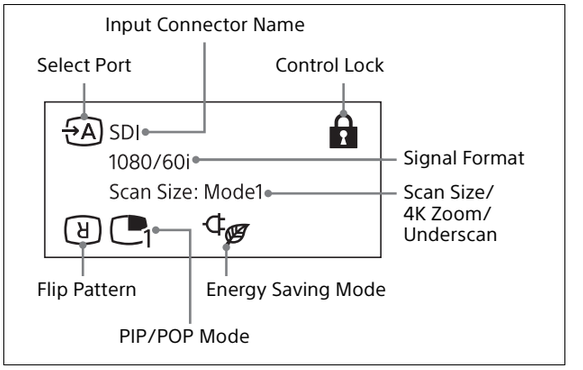

- Auto:
  The format and scan mode are displayed temporarily when the content of Status Display is changed.
- On:
  The format and scan mode are always displayed.
- Off:
  The format and scan mode are not displayed.

Notes

- Even if “Status Display” is set to “Auto” or “Off,” the flip pattern is always displayed.

- For details about the signal format, refer to no signal and non compatible signal displays.

Menu	Setting
	Input / **Signal format display** No signal / No Sync Non compatible signal (except for DVI-D) / Unknown Non compatible signal (DVI-D) / Out Of Range
Status Display Position	Sets the status display position.
Language	You can select the menu or message language from the following languages. • English: English • 中文: Chinese • 日本語: Japanese • Italiano: Italian • Español: Spanish • Deutsch: German • Français: French • Русский: Russian
Power On Setting	
Power On Mode	Select the setting when the monitor is turned on from the following settings. • Last: The setting when the monitor was last turned off. • Default Setting: The setting that is set in the default setting. • Preset A - T: The selected preset setting. • User1 - 20: The selected user setting.
Logo	Select the logo display when the power turns on, from “Off,” “On - 5sec,” “On - 10sec,” “On - 30sec,” “On - 60sec,” or “On - 120sec.”
Power Save	
Energy Saving Mode	Select the energy saving mode from the following options. • Off: Turns the energy saving mode off. • On: Dims the backlight.
Sleep Mode	Sets the sleep mode to “Off” or “On.” When you set to “On,” the monitor enters into power saving mode by turning off the backlight if there is no input signal from the selected connector for more than 1 minute.

Menu	Setting
Serial Remote	
Serial Remote	Selects the using mode. • Off: Inactivates the serial remote function. • RS-232C(Type 1): Controls this unit via RS-232C(Type 1) command. • RS-232C(Type 2): Controls this unit via RS-232C(Type 2) command. • Ethernet: Controls this unit via Ethernet command.
Remote	
Remote Mode	Sets the remote function when the REMOTE connector (stereo mini jack) is connected to the external equipment. • Off: Inactivates the remote function. • Port A/B: Switches between PORT A and PORT B. • PIP / POP: Switches between the single-image display and multi-image display (PIP1/PIP2/POP1/POP2). • Flip Pattern: Switches the flip pattern between “Off,” “Mirror,” and “Rotation.” • Mono: Switches the mono mode between “Off” and “On.” • Underscan: Switches the underscan between “Off,” “80%,” “85%,” “90%,” and “95%.”
Ethernet Setting	Sets the Ethernet. • IP Address: Sets the IP Address. • Subnet Mask: Sets the Subnet Mask. • Default Gateway: Sets “On” or “Off” of the Default Gateway. • Address: Sets the Default Gateway. • Save: Saves the confirmed setting. • Cancel: Returns to the previous setting from the confirmed setting.

Menu	Setting
Custom Button	Assigns the function to the CUSTOM 1, CUSTOM 2, or CUSTOM 3 button on the front panel, and can set the following functions to on or off. • No Setting • Scan Size • 4K Zoom • Flip Pattern • POP Sub Screen Position • Gamma • Mono • Contrast • Brightness • Chroma • Phase • User1 - 20
Panel Display	
Backlight	Adjusts the brightness of the display. A higher setting increases the brightness of the display, and a lower setting darkens the display.
Backlight Control	• Auto: Automatically switches between "Standard" and "High" according to the gamma settings. • Standard: Sets the backlight to standard brightness mode. • High: Sets the backlight to high brightness mode. • Off: Turns off backlight control.
Brightness Auto Adjustment	Sets the brightness auto adjustment. Setting "On" adjusts the display brightness automatically in accordance with the surrounding brightness. **Note** If you set to "On," it is possible to change the setting value for "Backlight," but it is not applied to the screen.
Auto Adjustment Level	Sets the level of the display brightness when the surroundings become dark in the brightness auto adjustment mode. Select from "High," "Medium," or "Low." When setting to "High," the brightness level in the dark surroundings becomes high.
Auto Adjustment Sensitivity	Sets the sensitivity to start lowering the display brightness in the brightness auto adjustment mode. Select from "High," "Medium," or "Low." When setting to "High," the lowering sensitivity becomes high. **Note** When the brightness auto adjustment setting is changed, be sure to check that the display is in the expected brightness before use.

Menu	Setting
Monitor Information	
Software Version	Displays the software version.
Operation Time	Displays the operation time.

Preset menu

The Preset menu is used to set the User1 to 20 preset setting.

Menu	Setting
Load Preset	Loads the settings that are stored Preset A to T.
Load User Setting	Loads the settings that are stored User1 to 20.
Save User Setting	Stores the current settings to User1 to 20.
User Name	Registers the user names to User1 to 20.
Load Default	Loads the setting data that is set for the default preset settings.
Default Preset	Sets the default preset. Set "Preset A" to "Preset T."
USB Import	
Color Tone Adjustment	Imports only the color tone adjustment setting values from among data exported to the USB memory.
All Settings	Imports all setting data exported to the USB memory. **Notes** • Make sure that adjusted values and settings are applied after importing data. • The network setting value is not imported.
USB Export	
Export All	Exports all setting data to the USB memory. **Note** Do not perform the following connections as it may cause a failure to the unit. • Do not connect a USB device which supplies power externally, such as a hard disk drive, to the USB connector (Type A) of the unit. • Among the USB devices to which the USB connector (Type A) supplies the power, do not connect a USB device which requires a current of 500 mA or higher even if temporarily.

Menu	Setting
	Notes on using the USB connector (Type A) • The USB mass storage is supported. However, we do not guarantee operation on all types of USB memories. • We do not guarantee the connection between the USB connector (Type A) and USB memory via a hub. • USB Hi-Speed is supported. • Compatible file system is FAT16 and FAT32. • Unlock the USB memory before use if it is locked. • The USB memory with 2 drives or more cannot be used. • The USB memory with special functions, such as encryption, is not supported.

Troubleshooting

This section may help you isolate the cause of a problem and as a result, eliminate the need to contact technical support.

- **"Unknown" or "Out Of Range" is displayed.**
  → Input the supported signal (page 41).
- **The monitor cannot be operated even when you press the buttons.**
  The monitor settings cannot be changed.
  The monitor cannot be remotely operated.
  → The key protection function is enabled. Set the Control Lock setting to "Off" (page 32).
- **The black bars appear at the upper and lower positions of the display.**
  → When the signal aspect ratio is different from that of the panel, the black bars appear. This is not a failure of the unit.
- **While the logo is displayed, the operation buttons do not operate when pushed.**
  → While the logo is displayed, the operation buttons do not operate. After the logo disappears, the operation buttons can be operated. The logo display time can be set in the menu (page 33).
- **The power indicator flashes in green.**
  → When the unit becomes hot, the brightness of the display backlight is reduced to lower the temperature inside the unit. This is not a failure of the unit (page 17).

Error Messages

When the following messages appear on the screen, turn off the power and contact an authorized dealer.

Messages	Description
Temperature Error	The temperature of this unit has increased.

Specifications

Design and specifications are subject to change without notice.

Notes
- Always verify that the unit is operating properly before use. SONY WILL NOT BE LIABLE FOR DAMAGES OF ANY KIND INCLUDING, BUT NOT LIMITED TO, COMPENSATION OR REIMBURSEMENT ON ACCOUNT OF THE LOSS OF PRESENT OR PROSPECTIVE PROFITS DUE TO FAILURE OF THIS UNIT, EITHER DURING THE WARRANTY PERIOD OR AFTER EXPIRATION OF THE WARRANTY, OR FOR ANY OTHER REASON WHATSOEVER.
- SONY WILL NOT BE LIABLE FOR CLAIMS OF ANY KIND MADE BY USERS OF THIS UNIT OR MADE BY THIRD PARTIES.
- SONY WILL NOT BE LIABLE FOR THE TERMINATION OR DISCONTINUATION OF ANY SERVICES RELATED TO THIS UNIT THAT MAY RESULT DUE TO CIRCUMSTANCES OF ANY KIND.

OEV-271MUH

Picture performance

LCD panel TFT Active Matrix
Pixel efficiency
99.99%
Viewing angle (panel specification)
89°/89°/89°/89° (typical) (up/down/left/right, contrast > 10:1)
Efficient picture size
596.7 × 335.7, 684.7 mm (w/h, dia) (23 $^{1}/_{2}$ × 13 $^{1}/_{4}$, 27 inches)
Resolution H 3 840 dots, V 2 160 lines
Aspect ratio 16:9

Input

Display Port input connector
Display Port connector (1)
SST, HDCP1.3 correspondence
HDMI input connector
HDMI connector (1)
HDCP2.3 correspondence
DVI-D input connector
DVI-D connector (1)
TMDS single link, HDCP1.4 correspondence
SDI input connector
BNC type (1)
SD: SMPTE ST 259 compliant
HD: SMPTE ST 292-1 compliant
3G: SMPTE ST 424 compliant
6G: SMPTE ST 2081-1 compliant
12G: SMPTE ST 2082-1 compliant
Remote connector
Serial remote
D-sub 9-pin (RS-232C) (1)
RJ-45 modular connector (ETHERNET) (1)
Remote Stereo mini jack (1)
AC input connector
100 V to 240 V, 50/60 Hz
DC input connector
DC 26 V

Output

Display Port output connector
Display Port connector (1)
SST, HDCP1.3 correspondence

DVI-D output connector
DVI-D connector (1)
TMDS single link
SDI output connector
BNC type (1)
Active-through
USB connector
Type C (1)
5 V/1.5 A

Input/Output

USB connector
Type A (1)
Hi-Speed USB (USB 2.0 compliant)
For USB memory

General

Power AC IN: 100 V - 240 V, 50/60 Hz, 1.3 A - 0.6 A
DC IN: 26 V, 5.4 A (Supplied from AC adaptor)
Power consumption
Maximum: approx. 126 W
Operating conditions
Temperature
0 °C to 40 °C (32 °F to 104 °F)
Humidity 30% to 85% (no condensation allowed)
Pressure 700 hPa to 1 060 hPa
Storage and transport conditions
Temperature
–20 °C to +60 °C (–4 °F to +140 °F)
Humidity 20% to 90%
Pressure 700 hPa to 1 060 hPa
Accessories supplied
AC power cord (1)
Plug holder for the AC power cord (1)
Instructions for Use (1)
CD-ROM (including the Software License Information) (1)
M4 × 12 screws (4)
* Already attached to the rear panel (page 44)
Optional accessories
AC Adaptor
AC-300MD
Monitor Stand
SU-600MD

Caution

AC-300MD does not conform to the drip-proof level of protection. Do not operate the unit in a place exposed to liquids, such as a floor in a surgical operating room.

Medical Specifications

Protection against electric shock:
Class I
Protection against dust penetration and harmful ingress of water:
Only the front side (symbol: FR) IP45
Other sides (symbol: OTH) IP32
(Only when all the cable covers are attached)
Degree of safety in the presence of a flammable anesthetic mixture with air or with oxygen or nitrous oxide:
Not suitable for use in the presence of a flammable anesthetic mixture with air or with oxygen or nitrous oxide
Mode of operation:
Continuous

OEV-321MUH

Picture performance

LCD panel TFT Active Matrix
Pixel efficiency
99.99%
Viewing angle (panel specification)
89°/89°/89°/89° (typical) (up/down/left/right, contrast > 10:1)
Efficient picture size
697.3 × 392.2, 800.1 mm (w/h, dia) (27 $^{1}/_{2}$ × 15 $^{1}/_{2}$, 31 $^{5}/_{8}$ inches)
Resolution H 3 840 dots, V 2 160 lines
Aspect ratio 16:9

Input

Display Port input connector
Display Port connector (1)
SST, HDCP1.3 correspondence
HDMI input connector
HDMI connector (1)
HDCP2.3 correspondence
DVI-D input connector
DVI-D connector (1)
TMDS single link, HDCP1.4 correspondence
SDI input connector
BNC type (1)
SD: SMPTE ST 259 compliant
HD: SMPTE ST 292-1 compliant
3G: SMPTE ST 424 compliant
6G: SMPTE ST 2081-1 compliant
12G: SMPTE ST 2082-1 compliant
Remote connector
Serial remote
D-sub 9-pin (RS-232C) (1)
RJ-45 modular connector (ETHERNET) (1)
Remote Stereo mini jack (1)
AC input connector
100 V to 240 V, 50/60 Hz
DC input connector
DC 26 V

Output

Display Port output connector
Display Port connector (1)
SST, HDCP1.3 correspondence
DVI-D output connector
DVI-D connector (1)
TMDS single link
SDI output connector
BNC type (1)
Active-through
USB connector
Type C (1)
5 V/1.5 A

Input/Output

USB connector
Type A (1)
Hi-Speed USB (USB 2.0 compliant)
For USB memory

General

Power AC IN: 100 V - 240 V, 50/60 Hz, 1.7 A - 0.7 A
DC IN: 26 V, 5.8 A (Supplied from AC adaptor)
Power consumption
Maximum: approx. 165 W
Operating conditions
Temperature
0 °C to 40 °C (32 °F to 104 °F)
Humidity 30% to 85% (no condensation allowed)
Pressure 700 hPa to 1 060 hPa
Storage and transport conditions
Temperature
–20 °C to +60 °C (–4 °F to +140 °F)
Humidity 20% to 90%
Pressure 700 hPa to 1 060 hPa
Accessories supplied
AC power cord (1)
Plug holder for the AC power cord (1)
Instructions for Use (1)
CD-ROM (including the Software License Information) (1)
M4 × 12 screws (4)
* Already attached to the rear panel (page 45)
Optional accessories
AC Adaptor
AC-300MD
Monitor Stand
SU-600MD

Caution

AC-300MD does not conform to the drip-proof level of protection. Do not operate the unit in a place exposed to liquids, such as a floor in a surgical operating room.

Medical Specifications

Protection against electric shock:
Class I
Protection against dust penetration and harmful ingress of water:
Only the front side (symbol: FR) IP45
Other sides (symbol: OTH) IP32
(Only when all the cable covers are attached)
Degree of safety in the presence of a flammable anesthetic mixture with air or with oxygen or nitrous oxide:
Not suitable for use in the presence of a flammable anesthetic mixture with air or with oxygen or nitrous oxide
Mode of operation:
Continuous

OEV-431MUH

Picture performance

LCD panel TFT Active Matrix
Pixel efficiency
99.99%
Viewing angle (panel specification)
89°/89°/89°/89° (typical) (up/down/left/right, contrast > 10:1)
Efficient picture size
941.2 × 529.4, 1 079.9 mm (w/h, dia) (37 $^{1}/_{8}$ × 20 $^{7}/_{8}$, 42 $^{5}/_{8}$ inches)
Resolution H 3 840 dots, V 2 160 lines
Aspect ratio 16:9

Input

Display Port input connector
Display Port connector (1)
SST, HDCP1.3 correspondence
HDMI input connector
HDMI connector (1)
HDCP2.3 correspondence
DVI-D input connector
DVI-D connector (1)
TMDS single link, HDCP1.4 correspondence
SDI input connector
BNC type (1)
SD: SMPTE ST 259 compliant
HD: SMPTE ST 292-1 compliant
3G: SMPTE ST 424 compliant
6G: SMPTE ST 2081-1 compliant
12G: SMPTE ST 2082-1 compliant
Remote connector
Serial remote
D-sub 9-pin (RS-232C) (1)
RJ-45 modular connector (ETHERNET) (1)
Remote Stereo mini jack (1)
AC input connector
100 V to 240 V, 50/60 Hz

Output

Display Port output connector
Display Port connector (1)
SST, HDCP1.3 correspondence
DVI-D output connector
DVI-D connector (1)
TMDS single link

SDI output connector
BNC type (1)
Active-through
USB connector
Type C (1)
5 V/1.5 A

Input/Output

USB connector
Type A (1)
Hi-Speed USB (USB 2.0 compliant)
For USB memory

General

Power AC IN: 100 V - 240 V, 50/60 Hz, 2.1 A - 0.9 A
Power consumption
Maximum: approx. 203 W
Operating conditions
Temperature
0 °C to 40 °C (32 °F to 104 °F)
Humidity 30% to 85% (no condensation allowed)
Pressure 700 hPa to 1 060 hPa
Storage and transport conditions
Temperature
–20 °C to +60 °C (–4 °F to +140 °F)
Humidity 20% to 90%
Pressure 700 hPa to 1 060 hPa
Accessories supplied
AC power cord (1)
Plug holder for the AC power cord (1)
Instructions for Use (1)
CD-ROM (including the Software License Information) (1)
M6 × 12 screws (4)
* Already attached to the rear panel (page 46)

Medical Specifications

Protection against electric shock:
Class I
Protection against dust penetration and harmful ingress of water:
Only the front side (symbol: FR) IP45
Other sides (symbol: OTH) IP32
(Only when all the cable covers are attached)
Degree of safety in the presence of a flammable anesthetic mixture with air or with oxygen or nitrous oxide:
Not suitable for use in the presence of a flammable anesthetic mixture with air or with oxygen or nitrous oxide
Mode of operation:
Continuous

Pin assignment

SERIAL REMOTE (RS-232C) connector
D-sub 9-pin, female

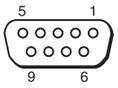

Pin number	Signal
1	NC
2	RX
3	TX
4	NC
5	GND
6	NC
7	NC
8	NC
9	NC

REMOTE (stereo mini jack) connector

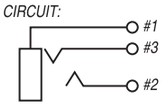

Pin number	Signal
1	GND
2	On (short to sleeve) Off (open)
3	NC

Available signal formats

The unit is compatible with the signal systems shown below:

Signal format			SDI
SDI Single Link			
SD-SDI			
720×487/59.94i [2]	4 : 2 : 2 YCbCr 10bit		○
720×576/50i	4 : 2 : 2 YCbCr 10bit		○
HD-SDI			
1920×1080/30p [1]	4 : 2 : 2 YCbCr 10bit		○
1920×1080/25p	4 : 2 : 2 YCbCr 10bit		○
1920×1080/24p [1]	4 : 2 : 2 YCbCr 10bit		○
1920×1080/60i [1]	4 : 2 : 2 YCbCr 10bit		○
1920×1080/50i	4 : 2 : 2 YCbCr 10bit		○
1280×720/30p [1]	4 : 2 : 2 YCbCr 10bit		○
1280×720/25p	4 : 2 : 2 YCbCr 10bit		○
1280×720/24p [1]	4 : 2 : 2 YCbCr 10bit		○
1280×720/60p [1]	4 : 2 : 2 YCbCr 10bit		○
1280×720/50p	4 : 2 : 2 YCbCr 10bit		○
3G-SDI			
1920×1080/60p [1]	4 : 2 : 2 YCbCr 10bit	Level A / Level B-DL	○
1920×1080/50p	4 : 2 : 2 YCbCr 10bit	Level A / Level B-DL	○
6G-SDI			
3840×2160/30p [1] [3]	4 : 2 : 2 YCbCr 10bit	Mode 1	○
3840×2160/25p [3]	4 : 2 : 2 YCbCr 10bit	Mode 1	○
3840×2160/24p [1] [3]	4 : 2 : 2 YCbCr 10bit	Mode 1	○
4096×2160/30p [1] [3]	4 : 2 : 2 YCbCr 10bit	Mode 1	○
4096×2160/25p [3]	4 : 2 : 2 YCbCr 10bit	Mode 1	○
4096×2160/24p [1] [3]	4 : 2 : 2 YCbCr 10bit	Mode 1	○
12G-SDI			
3840×2160/60p [1] [3]	4 : 2 : 2 YCbCr 10bit	Mode 1	○
3840×2160/50p [3]	4 : 2 : 2 YCbCr 10bit	Mode 1	○
4096×2160/60p [1] [3]	4 : 2 : 2 YCbCr 10bit	Mode 1	○
4096×2160/50p [3]	4 : 2 : 2 YCbCr 10bit	Mode 1	○

1) Also compatible with the frame rate 1/1.001.
2) The signal 720×487/60I is described as “480/60i” with the signal format of OSD menu in this manual.
3) This signal is described as “4K equivalent signal” in this manual.

Signal format		Display Port	HDMI	DVI [2]
640×480/60p [1]	4 : 4 : 4 RGB 10bit/8bit	○	○	○
	4 : 4 : 4 YCbCr 10bit/8bit	○	○	×
	4 : 2 : 2 YCbCr 12bit	×	○	×
720×480/60p [1]	4 : 4 : 4 RGB 10bit/8bit	○	○	○
	4 : 4 : 4 YCbCr 10bit/8bit	○	○	×
	4 : 2 : 2 YCbCr 12bit	×	○	×
1280×720/60p [1]	4 : 4 : 4 RGB 10bit/8bit	○	○	○
	4 : 4 : 4 YCbCr 10bit/8bit	○	○	×
	4 : 2 : 2 YCbCr 12bit	×	○	×

Signal format		Display Port	HDMI	DVI 2)
1920×1080/60i 1)	4 : 4 : 4 RGB 10bit/8bit	○	○	○
	4 : 4 : 4 YCbCr 10bit/8bit	○	○	×
	4 : 2 : 2 YCbCr 12bit	×	○	×
720×576/50p	4 : 4 : 4 RGB 10bit/8bit	○	○	○
	4 : 4 : 4 YCbCr 10bit/8bit	○	○	×
	4 : 2 : 2 YCbCr 12bit	×	○	×
1280×720/50p	4 : 4 : 4 RGB 10bit/8bit	○	○	○
	4 : 4 : 4 YCbCr 10bit/8bit	○	○	×
	4 : 2 : 2 YCbCr 12bit	×	○	×
1920×1080/50i	4 : 4 : 4 RGB 10bit/8bit	○	○	○
	4 : 4 : 4 YCbCr 10bit/8bit	○	○	×
	4 : 2 : 2 YCbCr 12bit	×	○	×
1920×1080/60p 1)	4 : 4 : 4 RGB 10bit/8bit	○	○	○
	4 : 4 : 4 YCbCr 10bit/8bit	○	○	×
	4 : 2 : 2 YCbCr 12bit	×	○	×
1920×1080/50p	4 : 4 : 4 RGB 10bit/8bit	○	○	○
	4 : 4 : 4 YCbCr 10bit/8bit	○	○	×
	4 : 2 : 2 YCbCr 12bit	×	○	×
3840×2160/60p 1) 3)	4 : 4 : 4 RGB 8bit	○	○	×
	4 : 4 : 4 YCbCr 8bit	○	○	×
	4 : 2 : 2 YCbCr 12bit	×	○	×
	4 : 2 : 0 YCbCr 8bit	×	○	×
3840×2160/50p 3)	4 : 4 : 4 RGB 8bit	○	○	×
	4 : 4 : 4 YCbCr 8bit	○	○	×
	4 : 2 : 2 YCbCr 12bit	×	○	×
	4 : 2 : 0 YCbCr 8bit	×	○	×
3840×2160/30p 1) 3)	4 : 4 : 4 RGB 10bit/8bit	○	○	×
	4 : 4 : 4 YCbCr 10bit/8bit	○	○	×
	4 : 2 : 2 YCbCr 12bit	×	○	×
3840×2160/25p 3)	4 : 4 : 4 RGB 10bit/8bit	○	○	×
	4 : 4 : 4 YCbCr 10bit/8bit	○	○	×
	4 : 2 : 2 YCbCr 12bit	×	○	×
4096×2160/60p 1) 3)	4 : 4 : 4 RGB 8bit	○	○	×
	4 : 4 : 4 YCbCr 8bit	○	○	×
	4 : 2 : 2 YCbCr 12bit	×	○	×
	4 : 2 : 0 YCbCr 8bit	×	○	×
4096×2160/50p 3)	4 : 4 : 4 RGB 8bit	○	○	×
	4 : 4 : 4 YCbCr 8bit	○	○	×
	4 : 2 : 2 YCbCr 12bit	×	○	×
	4 : 2 : 0 YCbCr 8bit	×	○	×

Signal format		Display Port	HDMI	DVI 2)
4096×2160/30p 1) 3)	4 : 4 : 4 RGB 10bit/8bit	○	○	×
	4 : 4 : 4 YCbCr 10bit/8bit	○	○	×
	4 : 2 : 2 YCbCr 12bit	×	○	×
4096×2160/25p 3)	4 : 4 : 4 RGB 10bit/8bit	○	○	×
	4 : 4 : 4 YCbCr 10bit/8bit	○	○	×
	4 : 2 : 2 YCbCr 12bit	×	○	×
800×600/60p 4)	4 : 4 : 4 RGB 10bit/8bit	○	○	○
1024×768/60p 4)	4 : 4 : 4 RGB 10bit/8bit	○	○	○
1280×768/60p 4)	4 : 4 : 4 RGB 10bit/8bit	○	○	○
1360×768/60p 4)	4 : 4 : 4 RGB 10bit/8bit	○	○	○
1600×1200/60p 4)	4 : 4 : 4 RGB 10bit/8bit	○	○	○
1920×1200/60p(RB) 4)	4 : 4 : 4 RGB 10bit/8bit	○	○	○
1920×1200/50p 4)	4 : 4 : 4 RGB 10bit/8bit	○	○	○
3840×2160/60p(RB) 3)	4 : 4 : 4 RGB 10bit/8bit	○	×	×

1) Also compatible with the frame rate 1/1.001.
2) DVI-D input is supported only for 8bit.
3) This signal is described as “4K equivalent signal” in this manual.
4) This signal is described as “PC signal” in this manual.

PC signal (DVI)

Range of DVI input signal (Compatible with up to 1920 × 1080/60 Hz)
Vertical frequency: 50.0 Hz to 85.1 Hz
Horizontal frequency: 31.0 kHz to 75.0 kHz
Dot clock: 25.175 MHz to 148.5 MHz
Picture size, phase: automatic discrimination by the DE (Data Enable) signal
Displays normally up to the maximum horizontal resolution 1920 dots.

Dimensions

OEV-271MUH

Front

When an optional stand SU-600MD is attached

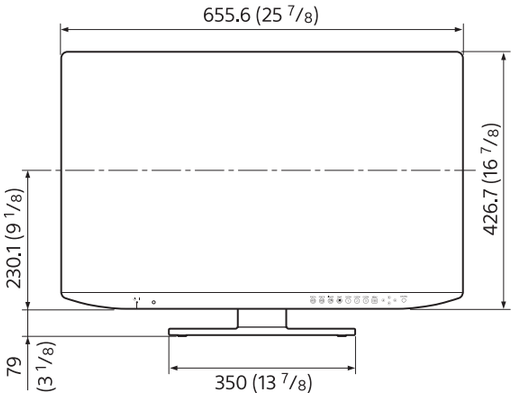

Unit: mm (inches)

Rear

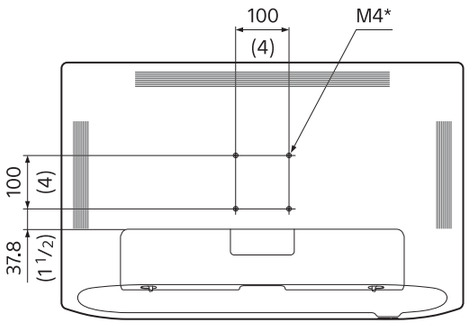

Unit: mm (inches)

* Screws already attached.

Mounting the unit to a wall mount or mounting arm

Warning

- Be sure to set the tightening torque value to the following value.
  Torque value: 1.2±0.1 N·m
- Make sure the tightening torque value is at this value. If the torque value is not appropriate, the mounting part may become damaged or the screws may become loosened, and in the worst case, it may cause injury or damage to the unit due to the unit falling.
- The supplied screws (already attached to the rear panel) are accommodated mounts with a thickness of 2 to 5 mm ($^{3}/_{32}$ to $^{7}/_{32}$ inches). When securing them to other objects, refer to the figure and use the screws recommended for the attached object.
- When mounting the unit to objects such as movable mounting arms, if excessive force is applied, the mounting part may become damaged, and in the worst case, it may cause injury or damage to the unit due to the unit falling. To use the monitor with the movable mounting arm, hold the handle of the mounting arm to move the monitor and avoid applying excessive force to the mounting part.

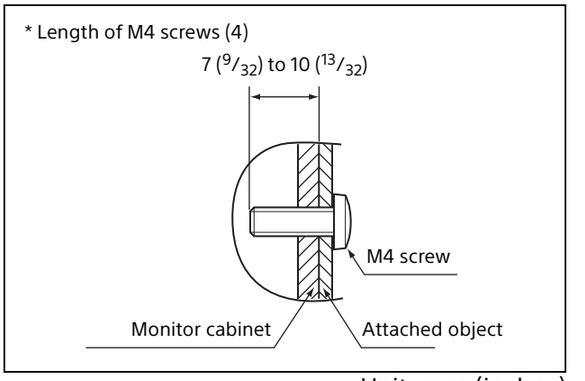

Unit: mm (inches)

Side

When an optional stand SU-600MD is attached

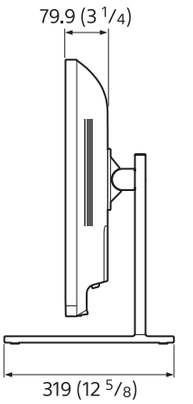

Unit: mm (inches)

Mass:
Approx. 9.2 kg (20 lb 5 oz) (when the optional stand is not installed)

OEV-321MUH

Front

When an optional stand SU-600MD is attached

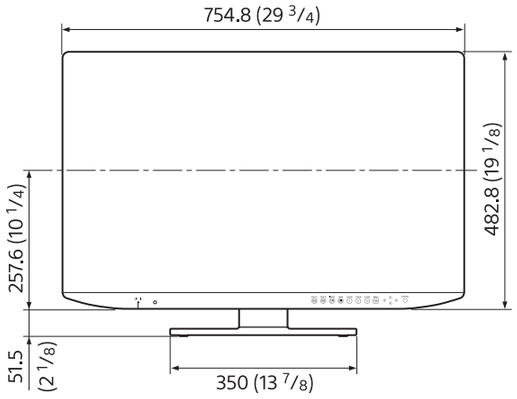

Unit: mm (inches)

Rear

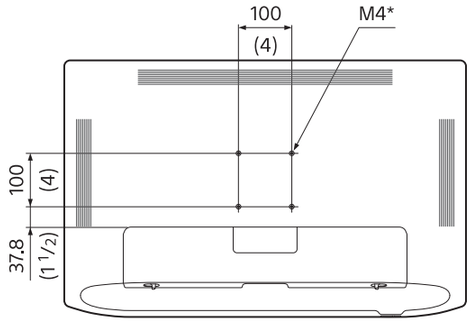

Unit: mm (inches)

* Screws already attached.

Mounting the unit to a wall mount or mounting arm

Warning

- Be sure to set the tightening torque value to the following value.
  Torque value: 1.2±0.1 N·m
- Make sure the tightening torque value is at this value. If the torque value is not appropriate, the mounting part may become damaged or the screws may become loosened, and in the worst case, it may cause injury or damage to the unit due to the unit falling.

- The supplied screws (already attached to the rear panel) are accommodated mounts with a thickness of 2 to 5 mm ($^{3}/_{32}$ to $^{7}/_{32}$ inches). When securing them to other objects, refer to the figure and use the screws recommended for the attached object.
- When mounting the unit to objects such as movable mounting arms, if excessive force is applied, the mounting part may become damaged, and in the worst case, it may cause injury or damage to the unit due to the unit falling. To use the monitor with the movable mounting arm, hold the handle of the mounting arm to move the monitor and avoid applying excessive force to the mounting part.

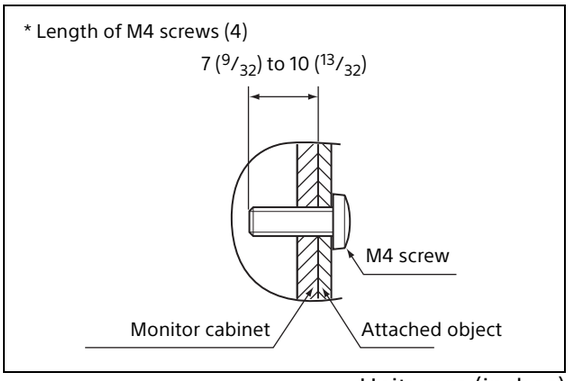

Unit: mm (inches)

Side

When an optional stand SU-600MD is attached

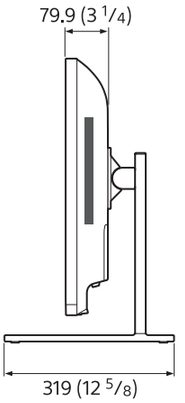

Unit: mm (inches)

Mass:
Approx. 11.2 kg (24 lb 11 oz) (when the optional stand is not installed)

OEV-431MUH

Front

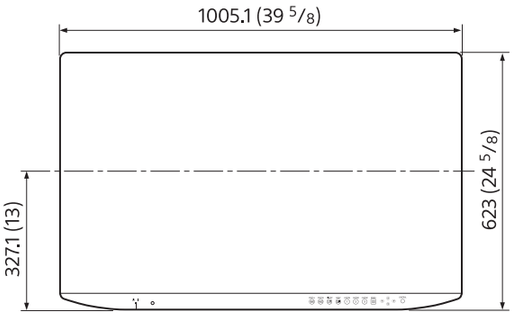

Unit: mm (inches)

Rear

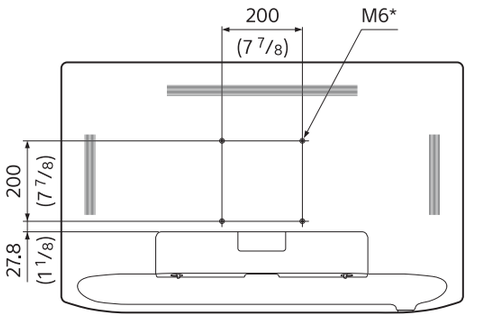

Unit: mm (inches)

* Screws already attached.

Mounting the unit to a wall mount or mounting arm

Warning

- Be sure to set the tightening torque value to the following value.
  Torque value: 1.7±0.1 N·m
- Make sure the tightening torque value is at this value. If the torque value is not appropriate, the mounting part may become damaged or the screws may become loosened, and in the worst case, it may cause injury or damage to the unit due to the unit falling.
- The supplied screws (already attached to the rear panel) are accommodated mounts with a thickness of 1 to 3 mm ($^{1}/_{16}$ to $^{1}/_{8}$ inches). When securing them to other objects, refer to the

figure and use the screws recommended for the attached object.

- When mounting the unit to objects such as movable mounting arms, if excessive force is applied, the mounting part may become damaged, and in the worst case, it may cause injury or damage to the unit due to the unit falling. To use the monitor with the movable mounting arm, hold the handle of the mounting arm to move the monitor and avoid applying excessive force to the mounting part.

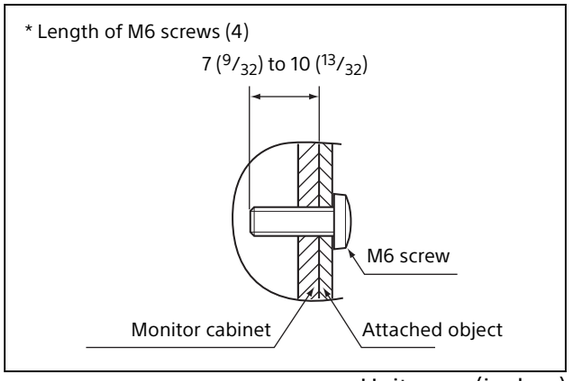

Unit: mm (inches)

Side

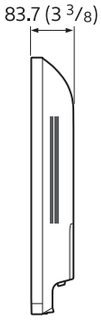

Unit: mm (inches)

Mass:
Approx. 16.9 kg (37 lb 5 oz)

Licenses

For details on the license, refer to “Software License Information” on the CD-ROM.