REVIEW COVER SHEET

Ventana Documentation:

Quick Start Review

Product Title: VAIO® Notebook Documentation
Coordinator: **Sandi Garza**
Phone Number: 408-955-5737
Fax Number: 408-955-6287
E-mail: sandi.garza@am.sony.com
Alternate Contact: Karen Biederman
E-mail: karen.biederman@am.sony.com

Please review and return your changes no later than: Monday, Jan. 13, 2003 @ 5 pm (PST).

Distribute to:

- **Alioto**, Gina
- **Aoki**, Rumiko
- **Araki**, Michiko
- **Capobianco**, Anthony
- **Fife**, Ed
- **Garay**, Rome
- **Hayashi**, Jucca
- **Iio**, Sakurako
- **Jenkins**, Eric
- **Joaquin**, Michael –
- **Okamoto**, Mariko
- **Omori**, Keith
- **Rindegard**, Johan
- **Takizawa**, Tatsuya
- **Wang**, John

Approved as is:	☐
Approved with changes as noted:	☐

Signature: _____

Date: _____

Comments: _____

SONY®

Draft 1

VAIO® Computer Quick Start

PCG-XX Series

Draft 1

Contents

Draft 1

Notice to Users 5

Setting Up 15
Unpacking Your Computer 16
Applying Ergonomics 18
Locating Controls and Ports 19

Getting Started 25
Turning On Your Computer 26
Using the Touch Pad 30
Registering Your Computer 31
Locating Your VAIO Computer User Guide 32
Setting Up A Dial-Up Connection 34
Turning Off Your Computer 36

Expanding Your Computing Power 39
Upgrading Memory 40
Locating Preinstalled Programs 40

Using the Application Recovery and System Recovery CDs 41
Application and System Recovery CDs 42

Draft 1

Using Your Recovery CDs 42

Caring for Your Computer.....49

Storing Your Computer 50
Using Cables and Connections 50
Cleaning Your Computer..... 51
Handling the LCD Screen..... 51

Troubleshooting.....53

Troubleshooting Your Computer (Windows XP)..... 54
Troubleshooting Your Computer (Windows 2000).. 59
Support Options 63

Index.....65

Notice to Users

Draft 1

© 2003 Sony Electronics Inc. All rights reserved. This manual and the software described herein, in whole or in part, may not be reproduced, translated, or reduced to any machine-readable form without prior written approval.

SONY ELECTRONICS INC. PROVIDES NO WARRANTY WITH REGARD TO THIS MANUAL, THE SOFTWARE, OR OTHER INFORMATION CONTAINED HEREIN AND HEREBY EXPRESSLY DISCLAIMS ANY IMPLIED WARRANTIES OF MERCHANTABILITY OR FITNESS FOR ANY PARTICULAR PURPOSE WITH REGARD TO THIS MANUAL, THE SOFTWARE, OR SUCH OTHER INFORMATION. IN NO EVENT SHALL SONY ELECTRONICS INC. BE LIABLE FOR ANY INCIDENTAL, CONSEQUENTIAL, OR SPECIAL DAMAGES, WHETHER BASED ON TORT, CONTRACT, OR OTHERWISE, ARISING OUT OF OR IN CONNECTION WITH THIS MANUAL, THE SOFTWARE, OR OTHER INFORMATION CONTAINED HEREIN OR THE USE THEREOF.

Sony Electronics Inc. reserves the right to make any modification to this manual or the information contained herein at any time without notice. The software described herein is governed by the terms of a separate user license agreement.

This product contains software owned by Sony and licensed by third parties. Use of such software is subject to the terms and conditions of license agreements enclosed with this product. Some of the software may not be transported or used outside the United States. Software specifications are subject to change without notice and may not necessarily be identical to current retail versions.

Updates and additions to software may require an additional charge. Subscriptions to online service providers may require a fee and credit card information. Financial services may require prior arrangements with participating financial institutions.

As an ENERGY STAR® Partner, Sony Corporation has determined that this product meets the ENERGY STAR® guidelines for energy efficiency.

The International ENERGY STAR® Office Equipment Program is an international program that promotes energy saving through the use of computers and other office equipment. The program backs the development and dissemination of products with functions that effectively reduce energy consumption. It is an open system in which business proprietors can participate voluntarily. The targeted products are office equipment such as computers, displays, printers, facsimiles and copiers. Their standards and logos are uniform among

Draft 1

participating nations. ENERGY STAR is a U.S. registered mark.

Wi Fi® CERTIFIED	The Wireless LAN functionality*, which is incorporated into selected models only, has passed Wi-Fi certification and complies with the interoperability specifications established by WECA (Wireless Ethernet Compatibility Alliance).

* Selected models may come with a PC Card.

Sony, DVgate, Handycam, i.LINK, Mavica, MagicGate™ Memory Stick, Memory Stick, MovieShaker, VAIO, and the VAIO logo are trademarks of Sony Corporation. Microsoft, Windows Media, Windows, Windows NT, and the Windows logo are registered trademarks of Microsoft Corporation. Intel, SpeedStep, and Pentium are trademarks or registered trademarks of Intel Corporation. PS/2 is a registered trademark of IBM. Acrobat Reader, Photoshop, Photoshop Elements, and Premiere are trademarks of Adobe Systems Incorporated. PowerPanel is a trademark of Phoenix Technologies Ltd.

This product incorporates copyright protection technology that is protected by method claims of certain U.S. patents and other intellectual property rights owned by Macrovision Corporation and other rights owners. Use of this copyright protection technology must be authorized by Macrovision Corporation, and is intended for home and other limited viewing uses only unless otherwise authorized by Macrovision Corporation. Reverse engineering or disassembly is prohibited. i.LINK is a trademark of Sony used only to designate that a product contains an IEEE 1394 connection. The i.LINK connection may vary, depending on the software applications, operating system, and compatible i.LINK devices. All products with an i.LINK connection may not communicate with each other. Please refer to the documentation that came with your compatible i.LINK device for information on operating conditions and proper connection. Before connecting compatible i.LINK PC peripherals to your system, such as a CD-RW or hard disk drive, confirm their operating system compatibility and required operating conditions. All other trademarks are trademarks of their respective owners.

End User / Product Activation Requirements

Certain software product(s) included with this computer may include features such as copy protection and content management technology. Use of the software product(s) requires agreement to applicable end user agreements and full compliance with applicable product activation procedures. Product activation procedures and privacy policies will be detailed during initial launch of the software product(s), or upon certain reinstallations of the software product(s) or reconfiguration of the computer, and may be completed by Internet or telephone (toll charges may apply).

Owner's Record

The model number and serial number are located on the bottom of your Sony VAIO computer. Refer to the model and serial number when you call your Sony Service Center.
Model Number: PCG-571L
Serial Number:_____

Draft 1

Safety Information

WARNING

- To prevent fire or shock hazard, do not expose your computer to rain or moisture.
- To avoid electrical shock, do not open the cabinet. Refer servicing to qualified personnel only.
- Never install modem or telephone wiring during a lightning storm.
- Never install telephone jacks in wet locations unless the jack is specifically designed for wet locations.
- Never touch uninsulated telephone wire or terminals unless the telephone line has been disconnected at the network interface.
- Use caution when installing or modifying telephone lines.
- Avoid using the modem during an electrical storm.
- Do not use the modem or a telephone to report a gas leak in the vicinity of the leak.
- A socket outlet should be as close as possible to the unit and easily accessible.
- i.LINK, PC Card, and USB connectors are not supplied with Limited Power Sources.

To change the backup battery, please contact your nearest Sony Service Center.

Caution: The use of optical instruments with this product will increase eye hazard. As the laser beam used in this product is harmful to the eyes, do not attempt to disassemble the cabinet. Refer servicing to qualified personnel only.

(For CD-RW/DVD Combo Drive, CD-ROM drive, DVD-ROM drive) Danger: Visible and invisible laser radiation when open. Avoid direct exposure to beam.

Caution: To reduce the risk of fire, use only No. 26 AWG or larger telecommunication line cord.

AVERTISSEMENT

- Pour prévenir tout risque d’incendie ou d’électrocution, garder cet appareil à l’abri de la pluie et de l’humidité.
- Pour prévenir tout risque d’électrocution, ne pas ouvrir le châssis de cet appareil et ne confier son entretien qu’à une personne qualifiée.
- Ne jamais effectuer l’installation de fil modem ou téléphone durant un orage électrique.
- Ne jamais effectuer l’installation d’une prise téléphonique dans un endroit mouillé à moins que la prise soit conçue à cet effet.
- Ne jamais toucher un fil téléphonique à découvert ou un terminal à moins que la

Draft 1

ligne téléphonique n'ait été débranche de l'interface réseau.

- Soyez très prudent lorsque vous installez ou modifiez les lignes téléphoniques.
- Évitez d'utiliser le modem durant un orage électrique.
- N'utilisez pas le modem ni le téléphone pour prévenir d'une fuite de gaz quand vous êtes près de la fuite.
- L'appareil doit être le plus près possible d'une prise murale pour en faciliter l'accès.
- Des connecteurs i.LINK, PC Card, et USB ne sont pas fournis avec des Sources d'Énergie Limitées.

Pour changer la pile de rechange, veuillez contacter votre centre de service Sony le plus près.

Avertissement: L'utilisation d'instruments optiques avec ce produit augmente les risques pour les yeux. Puisque le faisceau laser utilisé dans ce produit est dommageable pour les yeux, ne tentez pas de désassembler le boîtier. Adressez-vous à un agent de service qualifié.

(Pour le lecteur Combo de CD-RW/DVD, le lecteur CD-ROM, le lecteur DVD-ROM) Danger: Radiation laser visible et invisible si ouvert. Évitez l'exposition directe au faisceau.

Attention : Afin de réduire les risques d'incendie, n'utilisez qu'un cordon de communication N0. 26 AWG ou plus gros.

If you have questions about this product, you can reach the Sony Customer Information Service Center at 1-888-4-SONY-PC; or write to the Sony Customer Information Service Center at 12451 Gateway Blvd., Ft. Myers, FL 33913 or find Sony Customer Service on the Web at: http://www.sony.com/pcsupport.

Regulatory Information

Declaration of Conformity

Trade Name:	Sony
Model No.:	PCG-571L
Responsible Party:	Sony Electronics Inc.
Address:	680 Kinderkamack Road Oradell, NJ 07649
Telephone: (For FCC-related matters only.)	201-930-6972

This device complies with Part 15 of the FCC rules. Operation is subject to the following two conditions:

(1) This device may not cause harmful interference, and

(2) this device must accept any interference received, including interference that may cause undesired operation.

This equipment has been tested and found to comply with the limits for a Class B digital device, pursuant to Part 15 of the Rules. These limits are designed to provide reasonable protection against harmful interference in a residential installation. This equipment generates, uses, and can radiate radio frequency energy and, if not installed and used in accordance with the instructions, may cause

Draft 1

harmful interference to radio communications. However, there is no guarantee that interference will not occur in a particular installation. If this equipment does cause harmful interference to radio or television reception, which can be determined by turning the equipment off and on, the user is encouraged to try to correct the interference by one or more of the following measures:

- ❑ Reorient or relocate the receiving antenna.
- ❑ Increase the separation between the equipment and the receiver.
- ❑ Connect the equipment to an outlet on a circuit different from that to which the receiver is connected.
- ❑ Consult the dealer or an experienced radio/TV technician for help.

You are cautioned that any changes or modifications to the computer not expressly approved in this manual could void your authority to operate this equipment.

Only peripherals (computer input/output devices, terminals, printers, etc.) that comply with FCC Class B limits may be attached to this computer product. Operation with non-compliant peripherals is likely to result in interference to radio and television reception.

All cables used to connect peripherals must be shielded and grounded. Operation with cables connected to peripherals that are not shielded and grounded may result in interference to radio and television reception.

FCC Part 68

This equipment complies with Part 68 of the FCC rules and the requirements adopted by the ACTA. On the bottom of this equipment is a label that contains, among other information, a product identifier in the format US:AAAEQ##TXXXX. If requested, this information must be provided to the telephone company.

This modem uses the USOC RJ11C telephone jack.

A telephone plug and jack used to connect this equipment to the premises wiring and telephone network must comply with the applicable FCC Part 68 rules and requirements adopted by the ACTA.

The REN is used to determine the number of devices which may be connected to the telephone line. Excessive RENs on a telephone line may result in the devices not ringing in response to an incoming call. In most, but not all areas, the sum of RENs should not exceed five (5.0). To be certain of the number of devices that may be connected to a line, as determined by the total RENs, contact the telephone company. For products approved after July 23, 2001, the REN for this product is part of the product identifier that has the format US: AAAEQ##TXXXX. The digits represented by ## are the REN without a decimal point (e.g., 03 is a REN of 0.3). For earlier products, the REN is separately shown on the label.

If this equipment causes harm to the telephone network, the telephone company will notify you in advance that temporary discontinuance of service may be required. But if advance notice is not practical, the telephone company will notify the customer as soon as possible. Also, you will be advised of your right to file a complaint with the FCC if you believe it is necessary.

The telephone company may make changes in its facilities, equipment, operations, or procedures that could affect the operation of the equipment. If this happens, the telephone company will provide advance notice in order for you to make the necessary modifications in order to maintain uninterrupted service.

If trouble is experienced with this equipment, for repair or warranty information, please

contact 1-888-4-SONY-PC (1-888-476-6972), or write to the Sony Customer Information Service Center, One Sony Drive, Park Ridge, NJ 07656. If the equipment is causing harm to the telephone network, the telephone company may request that you disconnect the equipment until the problem is resolved.

Repair of this equipment should be made only by a Sony Service Center or Sony authorized agent. For the Sony Service Center nearest you, call 1-888-4-SONY-PC (1-888-476-6972).

Connection to party line service is subject to state tariffs. Contact the state public utility commission, public service commission, or corporation commission for information.

If your home has specially wired alarm equipment connected to the telephone line, ensure the installation of this equipment does not disable your alarm equipment. If you have questions about what will disable alarm equipment, consult your telephone company or a qualified installer.

Use a surge arrestor to protect against electrical surges.

FCC Radio Frequency Exposure (United States)

The available scientific evidence does not show that any health problems are associated with using low power wireless devices. There is no proof, however, that these low power wireless devices are absolutely safe. Low power Wireless devices emit low levels of radio frequency energy (RF) in the microwave range while being used. Whereas high levels of RF can produce health effects (by heating tissue), exposure to low level RF that does not produce heating effects causes no known adverse health effects. Many studies of low level RF exposures have not found any biological effects. Some studies have suggested that some biological effects might occur, but such findings have not been confirmed by additional research. The Notebook Computer (PCG-571L) has been tested and found to comply with the Federal Communications Commission (FCC) guidelines on radio frequency energy (RF) exposures. The maximum SAR levels tested for the Notebook Computer (PCG-571L) has been shown to be 0.0285 W/kg at Body in condition of right side of display at a middle channel of band.

Users are not permitted to make changes or modify the system in any way.

IC RSS-210 (Canada)

Operation is subject to the following two conditions: (1) this device may not cause interference, and (2) this device must accept any interference, including interference that may cause undesired operation of the device.

To prevent radio interference to the licensed service, this device is intended to be operated indoors and away from windows to provide maximum shielding. Equipment (or its transmit antenna) that is installed outdoors is subject to licensing.

The term “IC:” before the certification/registration number only signifies that the Industry Canada technical specifications were met.

The installer of this radio equipment must ensure that the antenna is located or pointed such that it does not emit RF field in excess of Health Canada limits for the general population; consult Safety Code 6, obtainable from Health Canada’s website www.hc-sc.gc.ca/rpb”

L’utilisation de ce dispositif est autorisée seulement aux conditions suivantes: (1) il ne doit pas produire de brouillage et (2) l’utilisateur du dispositif doit être prêt à accepter tout brouillage radioélectrique reçu, même si ce brouillage est susceptible de compromettre le fonctionnement du dispositif.

Pour empêcher que cet appareil cause du brouillage au service faisant l’objet d’une licence, il doit être utilisé à l’interieur et devrait être placé loin des fenêtres afin de fournir un écran de blindage maximal. Si le matériel (ou son antenne d’émission) est installé a l’exterieur, il doit faire l’objet d’une licence.

L’expression “IC:” avant le numéro

d'homologation/enregistrement signifie seulement que les spécifications techniques d'Industrie Canada ont été respectées.

The installer of this radio equipment must ensure that the antenna is located or pointed such that it does not emit RF field in excess of Health Canada limits for the general population; consult Safety Code 6, obtainable from Health Canada's website www.hc-sc.gc.ca/rpb**

Telephone Consumer Protection Act of 1991 (United States)

The Telephone Consumer Protection Act of 1991 makes it unlawful for any person to use a computer or other electronic device, including FAX machines, to send any message unless such message clearly contains in a margin at the top or bottom of each transmitted page or on the first page of the transmission, the date and time it is sent and an identification of the business or

[product name (model name)], [value], [position] will be replaced.

*****Above Gray lines will be translated to French.***

Draft 1

other entity, or other individual sending the message, and the telephone number of the sending machine or such business, other entity, or individual. (The telephone number provided may not be a 900 number or any other number for which charges exceed local or long-distance transmission charges.)

In order to program this information into your facsimile machine, see your fax software documentation.

Telephone Consumer Guidelines (Canada)

Please refer to your telephone directory under 'Privacy Issues' and/or 'Terms of Service.' For more detailed information, please contact:

CRTC
Terrasses de la Chaudière, Tour centrale
1 promenade du Portage, 5 étage Hull
PQ K1A 0N2.

This Class B digital apparatus complies with Canadian ICES-003.

Cet appareil numérique de la classe B est conforme à la norme NMB-003 du Canada.

RECYCLING LITHIUM ION BATTERIES

RECYCLING LITHIUM-ION BATTERIES

Lithium-Ion batteries are recyclable.

You can help preserve our environment by returning your used rechargeable batteries to the collection and recycling location nearest you.

For more information regarding recycling of rechargeable batteries, call toll free 1-800-822-8837, or visit http://www.rbrc.org/.

Caution: Do not handle damaged or leaking Lithium-Ion batteries.

Draft 1

RECYCLAGE DES ACCUMULATEURS AUX IONS DE LITHIUM

RECYCLAGE DES ACCUMULATEURS AUX IONS DE LITHIUM

Les accumulateurs aux ions de lithium sont recyclables.

Vous pouvez contribuer à préserver l'environnement en rapportant les piles usées dans un point de collection et recyclage le plus proche.

Pour plus d'informations sur le recyclage des accumulateurs, téléphonez le numéro gratuit 1-800-822-8837 (Etats-Units et Canada uniquement), ou visitez http://www.rbrc.org/.

Avertissment: Ne pas utiliser des accumulateurs aux ions de lithium qui sont endommagées ou qui fuient.

Do not handle damaged or leaking lithium ion batteries.

Danger of explosion if battery is incorrectly replaced. Replace only with the same or equivalent type recommended by the manufacturer. Discard used batteries according to the manufacturer's instructions.

The battery pack used in this device may present a fire or chemical burn hazard if mistreated. Do not disassemble, heat above 140°F (60°C) or incinerate. Dispose of used battery promptly. Keep away from children.

Ne pas utiliser des batteries au lithium ionisé qui sont endommagées ou qui fuient.

Une batterie non conforme présente un danger d'explosion. La remplacer seulement par une batterie identique ou de type équivalent recommandé par le fabricant. Évacuer les batteries usées selon les directives du fabricant.

La manutention incorrecte du module de batterie de cet appareil présente un risque d'incendie ou de brûlures chimiques. Ne pas démonter, incinérer ou exposer à une température de plus de 60°C. Évacuer promptement la batterie usée. Garder hors de portée des enfants.

Draft 1

INDUSTRY CANADA NOTICE

NOTICE: The Industry Canada label identifies certified equipment. This certification means that the equipment meets certain telecommunications network protective, operational and safety requirements as prescribed in the appropriate Terminal Equipment Technical Requirements document(s). The Department does not guarantee the equipment will operate to the user's satisfaction.

Before installing this equipment, users should ensure that it is permissible to be connected to the facilities of the local telecommunications company. The equipment must also be installed using an acceptable method of connection.

The customer should be aware that compliance with the above conditions may not prevent degradation of service in some situations.

Repairs to certified equipment should be coordinated by a representative designated by the supplier. Equipment malfunctions or any repairs or alterations made by the user to this equipment may give the telecommunications company cause to request that the user disconnect the equipment.

Users should ensure for their own protection that the electrical ground connections of the power utility, telephone lines and internal metallic water pipe system, if present, are connected together. This precaution may be particularly important in rural areas.

Caution: Users should not attempt to make such connections themselves, but should contact the appropriate electric inspection authority, or electrician, as appropriate.

NOTICE: The Ringer Equivalency Number (REN) assigned to each terminal device provides an indication of the maximum number of terminals allowed to be connected to a telephone interface. The termination on an interface may consist of any combination of devices subject only to the requirement that the sum of the RENs of all the devices does not exceed 5. The REN for this equipment is 0.2.

AVIS DE L'INDUSTRIE CANADA

AVIS: L'étiquette d'Industrie Canada identifie le matériel homologué.

Cette étiquette certifie que le matériel est conforme aux normes de protection, d'exploitation et de sécurité des réseaux de télécommunications, comme le prescrivent les documents concernant les exigences techniques relatives au matériel terminal. Le Ministère n'assure toutefois pas que le matériel fonctionnera à la satisfaction de l'utilisateur.

Avant d'installer ce matériel, l'utilisateur doit s'assurer qu'il est permis de le raccorder aux installations de l'entreprise locale de télécommunication. Le matériel doit également être installé en suivant une méthode acceptée de raccordement. L'abonné ne doit pas oublier qu'il est possible que la conformité aux conditions énoncées ci-dessus n'empêche pas la dégradation du service dans certaines situations.

Les réparations de matériel homologué doivent être coordonnées par un représentant désigné par le fournisseur. L'entreprise de télécommunications peut demander à l'utilisateur de débrancher un appareil à la suite de réparations ou de modifications effectuées par l'utilisateur ou à cause de mauvais fonctionnement.

Pour sa propre protection, l'utilisateur doit s'assurer que tous les fils de mise à la terre de la source d'énergie électrique, des lignes téléphoniques et des canalisations d'eau métalliques, s'il y en a, sont raccordés ensemble. Cette précaution est particulièrement importante dans les régions rurales.

Draft 1

Avertissement: L'utilisateur ne doit pas tenter de faire ces raccordements lui-même; il doit avoir recours à un service d'inspection des installations électriques, ou à un électricien, selon le cas.

AVIS: L'indice d'équivalence de la sonnerie (IES) assigné à chaque dispositif terminal indique le nombre maximal de terminaux qui peuvent être raccordés à une interface.

La terminaison d'une interface téléphonique peut consister en une combination de quelques dispositifs, à la seule condition que la somme d'indices d'équivalence de la sonnerie de tous les dispositifs n'excède pas 5. L'indice d'équivalence de la sonnerie de ce matériel est de 0.2.

CD-RW/DVD-ROM Laser Diode Properties

Laser Output:	**XX** µW (CD)
	XX µW (DVD)
Wave Length:	**XX** nm (CD)
	XX nm (DVD)

The use of optical instruments with this product will increase eye hazard. As the laser beam used in this product is harmful to the eyes, do not attempt to disassemble the drive cabinet. Refer servicing to qualified personnel only.

Visible and invisible laser radiation when open. Avoid direct exposure to beam.

Setting Up

Draft 1

Congratulations on your purchase of the Sony VAIO® computer. Sony has combined leading-edge technology in audio, video, computing, and communications to provide state-of-the-art personal computing.

- Unpacking Your Computer
- Applying Ergonomics
- Locating Controls and Ports

Draft 1

Unpacking Your Computer

Main Unit

AC Adapter

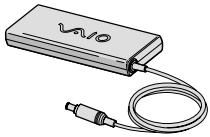

Rechargeable Battery

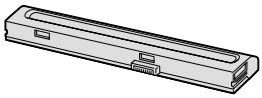

Power Cord

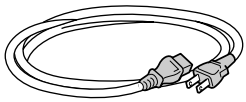

Documents

- **VAIO® Computer User Guide** — A searchable on-screen help file that contains detailed information on how to use your new computer. See "Locating Your VAIO Computer User Guide" on page 33 for more information.
- **VAIO® Computer Quick Start** — Contains information on unpacking and setting up your computer for immediate use.
- **VAIO® Computer Specifications (Windows® XP)** — An on-screen file that details the hardware specifications and lists the installed programs on your computer. See "Locating Your VAIO Computer User Guide" on page 33 for more information.
- **VAIO® Computer Specifications (Windows® 2000)** — A printed sheet that details your computer's hardware specifications.
- **Microsoft® Windows® guide** — Explains how to use the basic features of the Microsoft® Windows® operating system installed on your computer.

Draft 1

Software CDs

- Depending on the model you purchased, additional program CDs may be included with your computer.

Recovery CDs

- **Application Recovery CDs —** Enables you to reinstall individual programs and device drivers.
- **System Recovery CDs —** Enables you to restore the operating system and programs that shipped with your computer. This CD restores your computer to its original factory settings, so user data and programs installed since you started using your computer will be lost.

Draft 1

Applying Ergonomics

Your computer is a portable device and can be used in a variety of environments. Whenever possible, you should apply the following ergonomic considerations:

- **Position of your computer —** Place the computer directly in front of you as you work. Keep your forearms horizontal, with your wrists in a neutral, comfortable position while using the keyboard, touch pad, or external mouse. Let your upper arms hang naturally at your sides. Take breaks during sessions with your computer. Excessive use of the computer may strain muscles or tendons.
- **Furniture and posture —** Sit in a chair with good back support and armrests. Adjust the level of the chair so your feet are flat on the floor. A footrest may make you more comfortable. Sit in a relaxed, upright posture and avoid slouching forward or leaning far backward.
- **Viewing angle of the computer's display —** Tilt the display to find the best viewing angle. Also try adjusting the brightness setting of the display. Following these suggestions can reduce eye strain and muscle fatigue.
- **Lighting —** Choose a location where windows and lights do not create glare or reflection on the display. Use indirect lighting to avoid bright spots on the display. You can purchase accessories for your display that help reduce glare. Proper lighting adds to your comfort and work effectiveness.
- **Placement of an external display —** When using an external display, set the display at a comfortable viewing distance. Make sure the display screen is at eye level or slightly lower when you are sitting in front of the monitor.

Draft 1

Locating Controls and Ports

Front

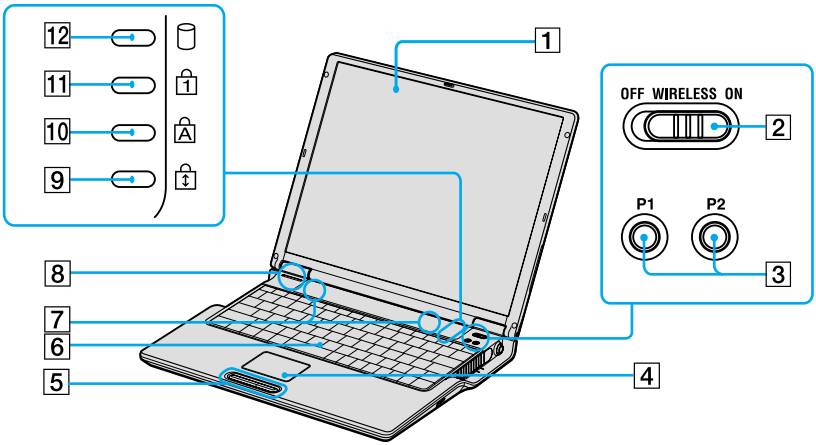

1	Computer screen (LCD)	**7**	Speakers
2	Wireless LAN switch	**8**	Model number
3	PPK buttons???	**9**	Scroll lock indicator
4	Touch pad	**10**	Caps lock indicator
5	Left and right buttons	**11**	Num lock indicator
6	Keyboard	**12**	Hard disk drive indicator

Draft 1

Back

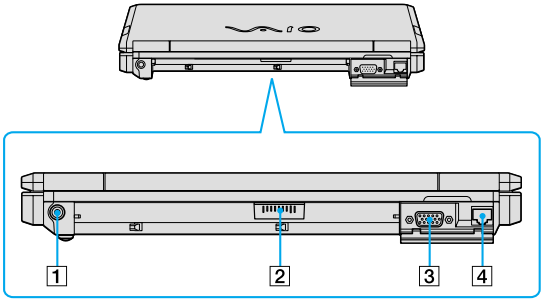

1	DC IN port	**3**	Monitor (VGA) port
2	Battery port	**4**	Network (Ethernet) port

Draft 1

Left

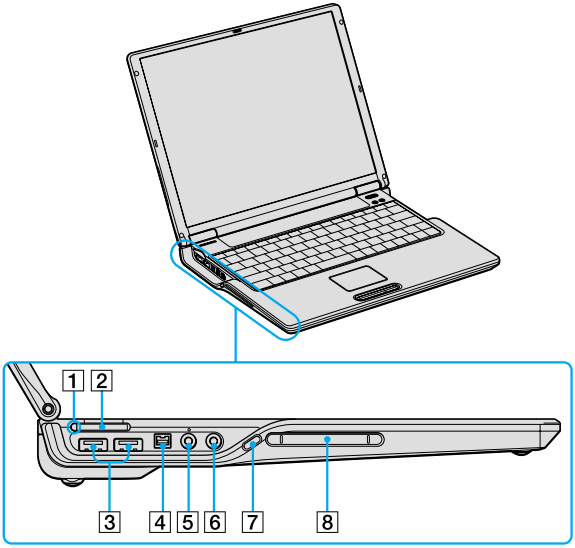

1	Memory Stick® media indicator	**5**	Microphone jack
2	Memory Stick® media slot	**6**	Headphone jack
3	USB 2.0 ports	**7**	PC Card slot eject button
4	i.LINK® (IEEE 1394) S400 port	**8**	PC Card slot

Draft 1

Right

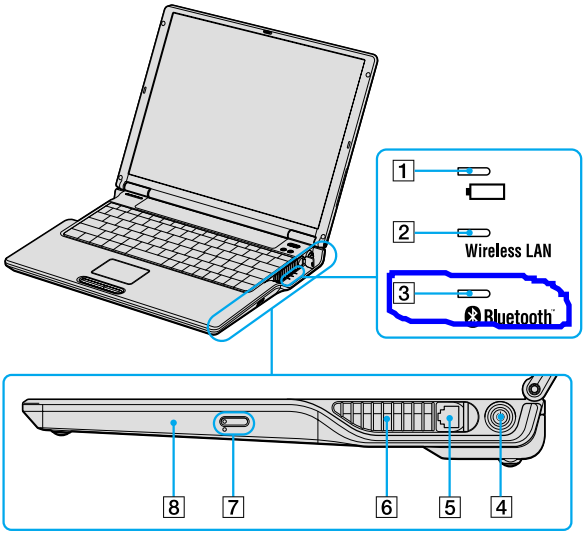

1	Battery indicator	**5**	Modem jack
2	Wireless LAN indicator	**6**	Air Vent
3	~~Bluetooth™ indicator~~	**7**	Optical drive eject button
4	Power button	**8**	Optical drive

Only connect 10BASE-T or 100BASE-TX cables to the Network (Ethernet) port. Do not connect any other type of network cable or any telephone line to this port. Connecting cables other than those listed above may result in an electric current overload and could cause a malfunction, excessive heat, or fire in the port. To connect the unit to a network, refer to your on-screen VAIO® Computer User Guide or contact your network administrator. See "Locating Your VAIO Computer User Guide" for more information.

Draft 1

Bottom

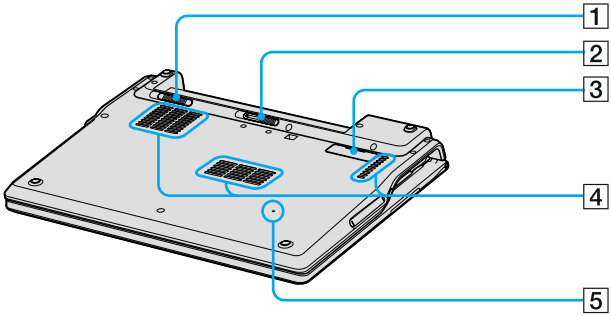

1	UNLOCK/LOCK latch	**4**	Ventilation fan
2	UNLOCK latch	**5**	Reset button
3	Port replicator connector		

Draft 1

Getting Started

Draft 1

This section helps you get your computer running and registered, so you can take advantage of Sony's many support options. You'll also learn how to locate your on-screen VAIO® Computer User Guide, which contains step-by-step instructions for operating your computer.

- Turning On Your Computer
- Using the Touch Pad
- Registering Your Computer
- Locating Your VAIO Computer User Guide
- Setting Up A Dial-Up Connection
- Turning Off Your Computer

Draft 1

Turning On Your Computer

To use your computer immediately, use the supplied AC adapter as a power source. Your supplied battery is not charged when you unpack it, however, you can begin charging it when you use your AC adapter. See “Powering Your Computer” in your on-screen VAIO® Computer User Guide for more information about using batteries. See also “Locating Your VAIO Computer User Guide” on page 32.

To charge the battery

1 Move the **UNLOCK/LOCK** latch on the bottom of the computer to the **UNLOCK** position.

UNLOCK/LOCK Latch

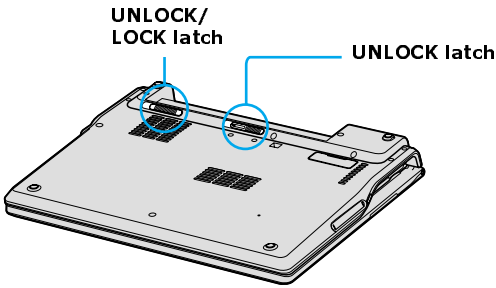

2 Align the grooves and tabs on the battery with the tabs and notches on the back of the computer, and slide the battery toward the computer until it clicks into place.

Draft 1

Inserting the Battery

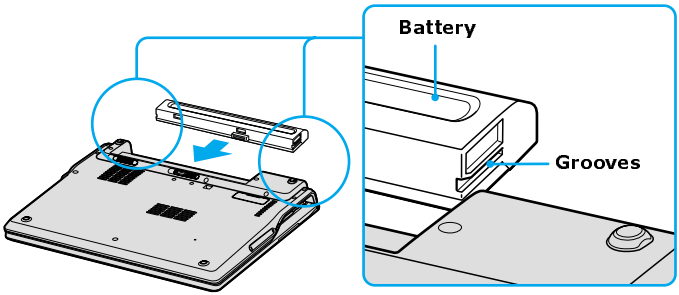

3 Move the **UNLOCK/LOCK** latch into the **LOCK** position to secure the battery on the computer.

4 Connect the AC adapter to the computer. See “To connect the AC adapter.”

Once you connect the AC adapter to the computer, the battery begins to charge whether the computer is on or off. The battery indicator shows the battery status. The indicator blinks as the battery charges. See “Powering Your Computer” in your on-screen VAIO® Computer User Guide for more information.

Draft 1

To connect the AC adapter

1 Plug the AC adapter cable into the DC IN port.

Connecting the AC Adapter to the Computer

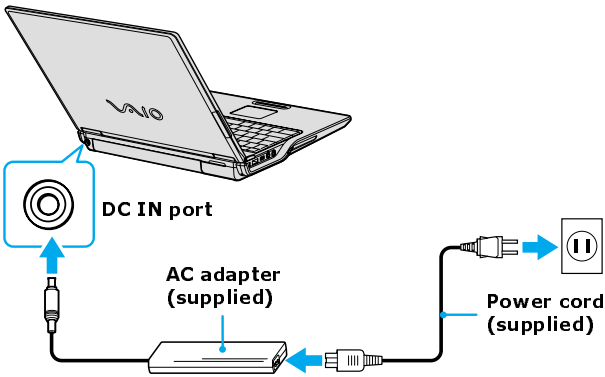

2 Plug the power cord into the AC adapter and an AC outlet.

Use only the supplied AC adapter with your computer.

To open and turn on the computer

1 Lift the cover while holding the bottom of the computer firmly.

Opening the Computer

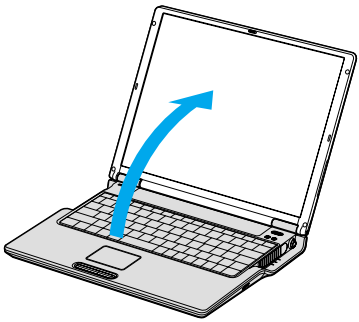

Draft 1

2 Press the power button until the green power indicator lights up.

Turning on the Computer

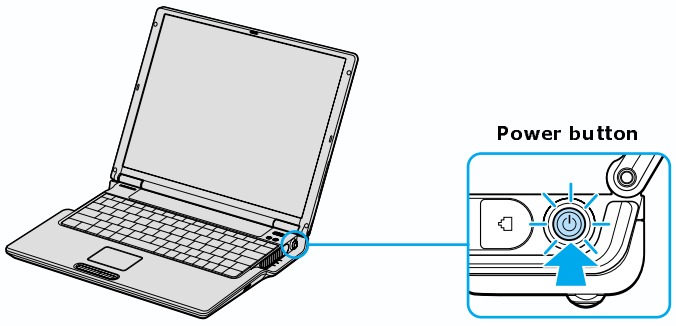

✍ If you continue to press the power button, the computer turns off.

3 If necessary, adjust the brightness controls for the LCD display as follows:

- ❑ To increase brightness, press the **Fn**+**F5** keys, and then press the **Up Arrow** key ↑ or **Right Arrow** key →.
- ❑ To decrease brightness, press the **Fn**+**F5** keys, and then press the **Down Arrow** key ↓ or **Left Arrow** key ← .

Draft 1

Using the Touch Pad

The computer contains a pointing device called a touch pad. You can point to, select, drag, and scroll objects on the screen using the built-in touch pad.

Describing the touch pad

Locating the Touch Pad

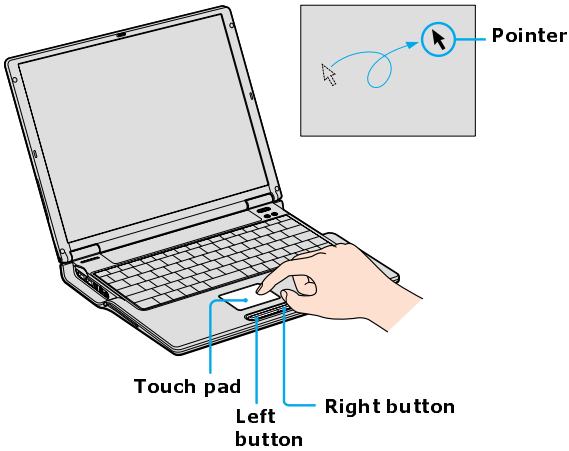

Touch Pad Action	*Description*
Sliding one finger	Equivalent to using a mouse to place the pointer on an item.
Tapping once	Equivalent to pressing the left button once.
Tapping twice	Equivalent to pressing the left button twice.

Draft 1

Touch Pad Action	*Description*
Sliding one finger while pressing the left button	Equivalent to using the mouse to drag an item.
Moving your finger along the right edge of the touch pad	Equivalent to scrolling vertically. (The scroll function is available only with programs that support a touch pad scroll feature.)
Moving your finger along the bottom to scroll horizontally	Equivalent to scrolling horizontally. (The scroll function is available only with programs that support a touch pad scroll feature.)

Registering Your Computer

✍ You are prompted to register your computer the first time you turn on the unit. Follow the on-screen instructions to complete the registration process. If you are not able to register your computer during the first session, you are provided with additional registration opportunities later.

Take advantage of Sony's commitment to quality customer support and receive these benefits by registering your computer:

- ❑ Sony Customer Support — Talk to a support representative to troubleshoot problems you may have with your computer.
- ❑ Limited Warranty Extension — Protect your investment. See the Warranty Card for more details.
- ❑ Product Information Notification — By giving Sony your contact information, you will enable Sony to reach you regarding performance updates and upgrades.

Draft 1

Locating Your VAIO Computer User Guide

The on-screen VAIO® Computer User Guide is a searchable help file that contains detailed information on how to use your new computer. Some of the topics in your on-screen VAIO® Computer User Guide include the following:

- Batteries
- Internet and Networking
- CDs and DVDs
- Printing
- Features
- Mice and Keyboards
- PC Cards and Floppy Disks
- Optical Drives
- Port Replicators (if applicable)
- Audio/Video
- Preinstalled Programs
- Memory

To open the user guide (Windows XP)

1 Click **Start** on the Windows® taskbar, and then click **Help and Support**. The **Help and Support Center** window appears, displaying information about your VAIO® computer and Microsoft® Windows® operating system.

Locating the VAIO User Guide (Windows XP)

2 Click **VAIO User Guide** in the **Pick a Help topic** column. A second **Help and Support Center** window appears, which offers information about your computer.

Draft 1

VAIO User Guide Window (Windows XP)

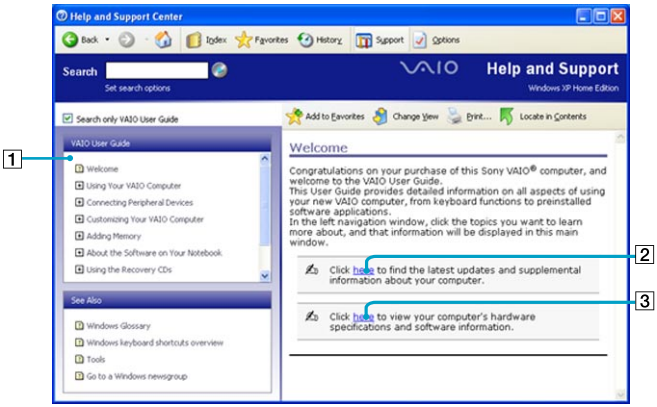

1	User guide table of contents	List of computer help topics
2	Link to Electronic Flyer	List of updates and supplemental information
3	Link to VAIO Computer Specifications	List of specifications and programs.

To open the user guide (Windows 2000)

❑ Click **Start** on the Windows® taskbar, point to **VAIO Help Center** and click **VAIO User Guide**. The **VAIO User Guide** appears.

Draft 1

VAIO User Guide (Windows 2000)

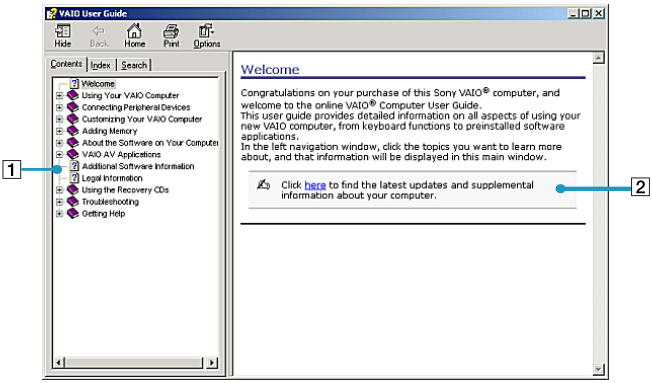

1	User guide table of contents	List of computer help topics
2	Link to Electronic Flyer	List of updates and supplemental information

Setting Up A Dial-Up Connection

This section describes the basic steps for setting up your dial-up connection. The Connection Wizard guides you through the process of choosing an Internet Service Provider (ISP) or setting up an existing account, and connecting to the Internet.

To set up a dial-up connection (Windows XP)

1 Connect a telephone cable to your computer. See “Setting up a dial-up Internet connection” in the Internet and Network Connections chapter of your on-screen VAIO® Computer User Guide.

2 Click **Start**, point to **All Programs**, **Accessories**, **Communications**, and then click **New Connection Wizard**. The **New Connection Wizard** appears.

Draft 1

New Connection Wizard

3 Click **Next**.

4 If it is not already selected, click **Connect to the Internet**.

5 Click **Next**.

6 Follow the on-screen instructions.

Draft 1

To set up a dial-up connection (Windows 2000)

1 Click **Start**, point to **Programs**, **Accessories**, **Communications**, and then click **Internet Connection Wizard**. The **Internet Connection Wizard** window appears.

Internet Connection Wizard

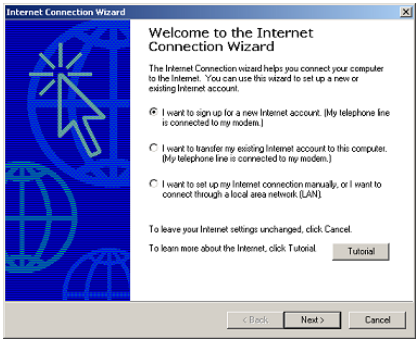

2 Follow the on-screen instructions to finish setting up your Internet connection.

Turning Off Your Computer

Using the power button to turn off your computer may result in loss of data. Follow the steps below to properly turn off your computer and avoid losing data.

To turn off your computer

1 Close all operations.

2 Click **Start** on the Windows® taskbar.

3 (Windows XP) Click **Turn Off Computer** at the bottom of the **Start** menu to display the **Turn off computer** window, and select **Turn Off**.
(Windows 2000) Click **Shut Down** at the bottom of the **Start** menu to display the **Shut Down Windows** window, and select **Shut Down**.

✍ Respond to any prompts warning you to save documents.

Draft 1

4 Wait for your computer to turn off automatically. The computer is off when the power indicator turns off.

✍ During a period of inactivity, you can conserve battery life by using power saving modes. See “Controlling Power Management” in the VAIO® Computer User Guide for more information.

✍ If you are unable to turn off the computer, press the power button and hold it. This operation may result in data loss.

Draft 1

Expanding Your Computing Power

Draft 1

This section helps you get started upgrading computer memory and locating information about preinstalled programs.

- Upgrading Memory
- Locating Preinstalled Programs

Draft 1

Upgrading Memory

Depending on the configuration you purchased, your computer may accept additional memory modules. For information about installation procedures, refer to the on-screen VAIO® Computer User Guide and print those relevant steps. See "Locating Your VAIO Computer User Guide" on page 32.

The specifications supplied with your computer (either on-screen for Windows XP or printed for Windows 2000) list the amount of installed memory and required memory modules for upgrades.

Locating Preinstalled Programs

Your computer comes with a variety of preinstalled audio/video programs. The following sources offer a list of preinstalled programs, descriptions, and information:

- **VAIO® Computer User Guide** — The Preinstalled Programs chapter of your on-screen VAIO® Computer User Guide contains a list of programs, descriptions, and support information. See "Locating Your VAIO Computer User Guide" on page 32 for more information.
- **VAIO® Computer Specifications (Windows XP)** — The on-screen file details your computer's hardware specifications and lists preinstalled programs, descriptions, and support information. See "Locating Your VAIO Computer User Guide" on page 32 for more information.
- **All Programs (Windows XP)** — The All Programs menu, which you can access from the Start menu, contains a list of all the preinstalled programs on your computer.
- **Programs (Windows 2000)** — The Programs menu, which you can access from the Start menu, contains a list of all the preinstalled programs on your computer.

Using the Application Recovery and System Recovery CDs

Draft 1

You can restore your system, individual programs, or drivers, using the Application Recovery and System Recovery CDs.

- Application and System Recovery CDs
- Using Your Recovery CDs

Draft 1

Application and System Recovery CDs

Your computer comes with the following Application Recovery and System Recovery CDs. You will need an optical drive to use these recovery CDs. If your computer does not come with an optical drive, use an external optical drive.

Application Recovery CDs
Sony Electronics Inc.
These CDs enable you to reinstall individual programs and device drivers if they become corrupted or are erased.

System Recovery CDs
Sony Electronics Inc.
These CDs enable you to restore the operating system and programs that shipped with your computer if they become corrupted or are erased. These CDs restore your computer to its original factory settings, so user data and programs installed since you started using your computer will be lost.

Using Your Recovery CDs

The following sections describe how to use the Application Recovery and System Recovery utilities.

- Using the Application Recovery CDs
- Using the System Recovery CDs

Using the Application Recovery CDs

The Application Recovery CDs enable you to reinstall individual programs and device drivers, and to repair programs if they become corrupted or are erased. Reinstalling an individual program or device driver may correct a problem you are experiencing with your computer, peripheral hardware, or software. You may not need to reinstall the entire contents of your hard disk. To reinstall all the programs that shipped with your computer, use the System Recovery CDs. See “Using the System Recovery CDs” for more information.

✍ Your computer must have a Microsoft® Windows® operating system to run the Application Recovery CD utility.

Draft 1

To reinstall programs with the Application Recovery CDs

> ✍ Your system may include one or more Application Recovery CDs. If you have more than one Application Recovery CD, insert the first CD (CD No. 1) to run the Application Recovery program. You may be prompted to insert the next CD, depending on the application you wish to restore.

1. Turn on your computer. If your computer is already on, close all open programs.
2. Logon to the Microsoft® Windows® desktop.
3. Insert Sony Application Recovery CD No. 1 into your computer's optical drive. The Application Recovery utility starts automatically.
4. Click **OK** in the VAIO welcome window. The **Sony Application Recovery Program** window appears.
5. Double-click the **Software** folder. Icons representing the original, preinstalled programs are displayed.
6. Double-click the application you want to restore. The program's installation wizard begins.
7. Follow the on-screen instructions to complete the recovery process.

To reinstall device drivers using Windows XP operating system

(For Windows® XP systems only) The Microsoft® Windows® XP operating system is capable of reinstalling the original factory-installed device drivers, without using the Application Recovery CD(s).

1. Click **Start** in the Windows taskbar, then right-click **My Computer**. A shortcut menu appears.
2. Click **Properties**. The System Properties dialog box appears.
3. From the **Hardware** tab, click the **Device Manager** button.
4. Right-click to select the unknown device[1] or the device that requires the driver installation and click **Update Driver** from the shortcut menu. The Hardware Update Wizard appears.

1 Unknown devices are identified by a yellow question mark. A device that has a driver problem is identified by a yellow exclamation mark.

Draft 1

5 Follow the on-screen instructions to locate the device and reinstall the appropriate device driver.

✍ If Windows® XP does not reinstall the device driver(s), follow the steps in the next section to reinstall the device driver(s) using the Application Recovery CD(s).

To reinstall device drivers with the Application Recovery CDs

✍ Your system includes one or more Application Recovery CDs. Insert Application Recovery CD No. 1 to start the application or driver recovery process. You are prompted to insert the next CD(s), depending on the application or driver you want to restore.

1 Logon to the Microsoft® Windows® desktop.

2 Insert Application Recovery CD No. 1 into your computer's optical drive. The VAIO welcome window appears. Click **OK**, then click **Quit** to close the Sony Application Recovery utility. (Leave the CD in the optical drive.)

3 Click **Start** on the Windows® taskbar, and right-click **My Computer**. A shortcut menu appears.

4 Click **Properties**. The **System Properties** dialog box appears.

5 Click the **Hardware** tab, and click **Device Manager**.

6 Right-click the unknown device[1] or the device that requires the driver installation, and click **Update Driver** from the shortcut menu. The Hardware Update Wizard appears.

7 In the **Hardware Update Wizard**, click to select **Install from a list or specific location (Advanced)**.

8 Click **Next**.

9 Click to cancel the **Search removable media (floppy, CD-ROM...)** option.

10 Click to select the **Include this location in the search** check box.

11 Click **Browse**. The **Browse For Folder** dialog box appears.

1 Unknown devices are identified by a yellow question mark. A device that has a driver problem is identified by a yellow exclamation mark.

Draft 1

12 Navigate to the optical drive, and click to select the Application Recovery CD. The CD contents are displayed.

13 Click the folder name of the device in which you want to reinstall, and click **OK**. The **Hardware Update Wizard** appears.

14 Click **Next**, and select the device folder. The Microsoft® Windows® operating system automatically reinstalls the device driver(s) from the Application Recovery CD.

15 Click **Finish**, and remove the Application Recovery CD from the optical drive.

16 Turn off your computer by clicking **Start**, and then **Turn off computer**.

17 Wait 30 seconds, and turn on your computer.

If you have any questions about using the Application Recovery CD(s), visit http://www.sony.com/pcsupport.

Using the System Recovery CDs

The System Recovery CDs enable you to format your hard disk drive and restore the operating system and all original, preinstalled programs. If the operating system or programs become corrupted or are erased, you can restore your computer to the original factory settings.

> ⚠ **The System Recovery process removes all programs that you may have installed since you started using your computer. Reinstall any program that was not included with the computer when you purchased it.**

You may not need to reinstall the entire contents of your hard drive. If you experience a problem with your computer, reinstalling an individual device driver or program may correct the problem. Use the Application Recovery CDs to reinstall individual programs and device drivers. See “Using the Application Recovery CDs” for more information.

The System Recovery CDs contain a backup copy of all the programs originally installed on your hard disk. It can be used only to recover the hard disk of the Sony computer you purchased.

When you successfully complete your system recovery, you are prompted to complete the Windows® registration process.

Draft 1

System Recovery options

- **Default System Drive Recovery** — All data on Drive C is deleted. The factory default settings and programs are restored on this drive only.
- **Change Partition Size and Recover** — All partitions, custom installations, and changes are removed from the hard drive. You can set the partition sizes for both Drive C and Drive D. The original, preinstalled operating system and programs are restored.
- **Factory Default Settings Recovery** — All data and partitions are removed from the hard drive. All original factory settings, the operating system, and preinstalled programs are restored.

> ⚠ **The System Recovery utility does not back up your system's data. If you wish to retain your system data, perform a backup to an external media.**

To use the System Recovery CDs

Your system may take a few minutes to load necessary files. A blue screen may appear during the downloading process.

Your system may include one or more System Recovery CDs. If you have more than one System Recovery CD, insert the first CD (CD No. 1) to run the System Recovery program. You will be prompted to insert the next CD(s) once the information from the first CD has been installed.

1. Press the disc eject button to open the optical disc drive and extend the disc tray.
2. Insert the Sony System Recovery CD No. 1 into the optical drive, and close the drive. The first CD must be in the drive before you restart your computer.
3. (Windows XP) Turn off your computer by clicking **Start**, **Turn off computer**, and selecting **Turn Off**.
   (Windows 2000) Turn off your computer by clicking **Start**, **Shut Down**, and selecting **Shut Down**.
4. Wait at least 30 seconds, and turn on your computer. The System Recovery utility restarts from the optical drive. Your screen displays the downloading progress, "Starting VAIO Recovery Utility."
5. When the **VAIO System Recovery Utility** wizard appears, click **Next**.
6. The Notes on Use window appears. Click **Next**.

Draft 1

7 On the Main Menu - Product Recovery window, select the appropriate option to recover your system.

8 Follow the on-screen instructions to complete the recovery process.

✍ The recovery process takes approximately 30 to 60 minutes to complete.

After recovering your system using the System Recovery CD(s), you may be prompted to insert your Application Recovery CD(s) after restarting Windows. Use the Application Recovery CD(s) to complete full restoration of your system.

If your computer does not start from the Recovery CD

1 Press the power button and hold it for more than four seconds to turn off the computer.

2 Turn on the computer. When the Sony logo is displayed, press the **F2** key. The **BIOS Setup Utility** appears.

3 Press the right arrow key → to select the **Exit** menu.

4 Press the down arrow key ↓ to select **Get Default Values**, and press **Enter**. The **Setup Confirmation** window appears.

5 Press **Enter** again to select **Yes**.

6 Make sure **Exit (Save Changes)** is selected, and then press **Enter**. The **Setup Confirmation** window appears again.

7 Make sure **Yes** is selected, and press **Enter**. The computer restarts from the Recovery CD.

✍ If you have more than one System Recovery CD, insert the first CD to run the System Recovery program. You are prompted to insert the second CD once the information from the first CD has been installed.

The recovery process takes 30 to 60 minutes to complete.

After recovering your system using the System Recovery CDs, you may be prompted to insert your Application Recovery CDs after restarting the Windows operating system. Insert the Application Recovery CD to automatically complete recovery of your system.

Draft 1

Caring for Your Computer

Draft 1

This section provides information on how to safely use your Sony computer.

- Storing Your Computer
- Using Cables and Connections
- Cleaning Your Computer
- Handling the LCD Screen

Draft 1

Storing Your Computer

- Do not use or store your computer in a location subject to:
  - Heat sources, such as radiators or air ducts
  - Direct sunlight
  - Excessive dust
  - Moisture or rain
  - Mechanical vibration or shock
  - Strong magnets or speakers that are not magnetically shielded
  - Ambient temperature higher than 95ºF (35ºC) or less than 40ºF (5ºC)
  - High humidity
- Do not place electronic equipment near your computer. When running, the computer's electromagnetic field may cause other electronic equipment in close proximity to malfunction.
- Provide adequate air circulation to prevent internal heat buildup. Do not place your computer on porous surfaces such as rugs or blankets, or near materials such as curtains or draperies that may block ventilation. Leave a space of at least 8 inches (20 cm) behind the back of the computer.
- If the computer is brought directly from a cold location to a warm one, moisture may condense inside your computer. In this case, allow at least one hour before turning on your computer. If any problems occur, unplug your computer, and contact your Sony Service Center.
- The computer uses high-frequency radio signals and may interfere with radio or TV reception. Should this occur, move the computer a suitable distance away from the radio or TV.
- Do not drop the computer or place heavy objects on top of the computer.

Using Cables and Connections

- Use only specified peripheral equipment and interface cables.
- Do not use cut or damaged connection cables.
- If the telephone company makes a service call to your home or office and determines that your computer is responsible for a problem, the telephone company may bill you for the service call. Also, if you do not disconnect your computer when it is adversely affecting a telephone line, the telephone

Draft 1

company has the right to disconnect your service until you correct the problem.

Cleaning Your Computer

- Clean the computer with a soft, dry cloth or a soft cloth lightly moistened with a mild detergent solution. Do not use any type of abrasive pad, scouring powder, or solvent such as alcohol or benzine, as these may damage the finish of your computer. You can use canned compressed air specifically for computer to remove dust.
- If a solid object falls onto the computer or a liquid leaks into the computer, immediately turn off and unplug the computer. It is best to have the computer checked by qualified personnel before you use it again.
- Avoid rubbing the LCD screen as this can damage the screen. Use a soft, dry cloth to wipe the LCD screen or canned compressed air.
- Always disconnect the power cord before cleaning the computer.

Handling the LCD Screen

- Direct sunlight can damage the LCD. Be careful when using the computer near a window.
- Do not scratch the LCD or exert pressure on it. This can cause a malfunction.
- Using the computer in low temperature conditions may produce a residual image on the screen. This is not a malfunction. When the computer returns to normal temperature, the screen returns to normal.
- The screen becomes warm during operation. This is normal and does not indicate a malfunction.
- The LCD is manufactured using high-precision technology. You may, however, see tiny black points and/or bright points (red, blue, or green) that continuously appear on the LCD. This is a normal result of the manufacturing process and does not indicate a malfunction.

Draft 1

Troubleshooting

Draft 1

This section describes how to solve some basic problems you may encounter when using your computer. For more troubleshooting topics refer to the VAIO® Computer User Guide. Many problems have simple solutions, so refer to these sources before you contact Sony Computing Support (http://www.sony.com/pcsupport).

- Troubleshooting Your Computer (Windows XP)
- Troubleshooting Your Computer (Windows 2000)
- Support Options

Draft 1

Troubleshooting Your Computer (Windows XP)

What do I do if my computer won't start?

- ❑ Make sure the computer is securely plugged into a power source and turned on. Make sure the power indicator shows the power is on.
- ❑ Make sure the battery is inserted properly and charged.
- ❑ Make sure the floppy disk drive (if applicable) is empty.
- ❑ If the computer is plugged into a power strip or uninterruptible power supply (UPS), make sure the power strip or UPS is turned on and working.
- ❑ If you are using an external display, make sure it is plugged into a power source and turned on. Make sure the brightness and contrast controls are adjusted correctly. See the guide that came with your display for details.
- ❑ Disconnect the AC adapter and remove the battery. Wait one minute. Reattach the AC adapter and reinsert the battery. Turn on the power.
- ❑ Condensation may cause the computer to malfunction. If this occurs, do not use the computer for at least one hour.
- ❑ If the computer still does not turn on, follow these steps:

  1 Unplug the power cord and remove the battery.

  2 Use a thin, straight object (such as a paper clip) to press the reset button.

  3 Reinsert the power cord and the battery.

  4 Turn on the computer.

What do I do if a BIOS error appears when my computer starts?

If the message "Press <F1> to resume, <F2> to setup" appears at the bottom of the screen, follow these steps:

1 Press **F2**. The **BIOS Setup** menu appears.

2 Set the date (month/day/year). Press **Enter**.

3 Press the **Down Arrow** key ↓ to select **System Time**, and then set the time (hour: minute: second). Press **Enter**.

4 Press the **Right Arrow** key → to select the **Exit** tab, and then press the **Down Arrow** key ↓ to select **Get Default Values**. The message **Load default values for all SETUP items** appears.

Draft 1

5 Press **Enter**. The **Setup Confirmation** window appears.

6 Select **Yes**, and press **Enter**.

7 Select **Exit (Save Changes)**, and press **Enter**. The **Setup Confirmation** window appears again.

8 Select **Yes**, and press **Enter**. The computer restarts.

✍ If this occurs on a regular basis, contact Sony Computing Support (http://www.sony.com/pcsupport).

What do I do if the message "Operating system not found" appears when my computer starts, and why won't Windows start?

- ❑ Make sure the computer does not have a "non-bootable" floppy disk in the floppy disk drive (if applicable).
- ❑ If a non-bootable floppy disk is in the drive:
  1. Remove the floppy disk.
  2. Restart the computer and confirm that the Microsoft® Windows® operating system starts properly.
- ❑ If Windows still does not start, follow these steps to initialize the BIOS:
  1. If there is a disk in the floppy disk drive, then remove it.
  2. Turn off the computer.
  3. Remove any peripheral devices connected to the computer.
  4. Restart the computer.
  5. Press **F2** when the Sony logo appears. The **BIOS Setup** window appears.
  6. Press the **Right Arrow** key → to select the **Exit** menu.
  7. Press the **Down Arrow** key ↓ to select **Get Default Values**. The message **Load default values for all SETUP items** appears.
  8. Press **Enter**. The **Setup Confirmation** window appears.
  9. Select **Yes**, and press **Enter**.

Draft 1

10 Select **Exit (Save Changes)**, and press **Enter**. The **Setup Confirmation** window appears again.

11 Select **Yes**, and press **Enter**. The computer restarts.

If your computer continues to display the message "Operating system not found," and Windows does not start, use your supplied System Recovery CDs to restore the programs that shipped with your computer. See "Using the System Recovery CDs" for more information.

> ⚠ **The System Recovery CD restores your computer to its original state, so user data and applications will be lost.**

Why does my computer stop responding? Why can't I turn off my computer?

It is best to turn off your computer using the Turn Off Computer option on the Microsoft® Windows® Start menu, located on the taskbar. Using other methods, including those listed below, may result in loss of unsaved data.

- Click **Start** on the Windows® taskbar, select **Turn Off Computer**, and then click **Turn Off**.
- If your computer does not turn off, press the **Ctrl**+**Alt**+**Delete** keys simultaneously. When the **Windows Task Manager** dialog box appears, click **Turn Off** from the **Shut Down** menu.
- If your computer still does not turn off, press and hold the power button or slide and hold the power switch until the computer turns off.
- If your computer stops responding while playing a CD or DVD, press the **Ctrl**+**Alt**+**Delete** keys simultaneously. You can turn off the computer from the **Windows Task Manager**.

> ✍ Pressing the **Ctrl**+**Alt**+**Delete** keys simultaneously or turning off the computer with the power button or switch may cause loss of data.

- Remove the AC adapter and battery.

Why won't my computer enter Standby or Hibernate mode?

Your computer's operating system may become unstable if the operating mode is changed before the computer completely enters Standby or Hibernate mode.

To restore the computer to normal operating stability:

Draft 1

1 Close all open programs.

2 Restart the computer. Follow these steps:

   1 Press the **Windows** key .

   2 Press **U**.

   3 Press **R** to select restart.

3 If the computer does not restart, follow these steps:

   1 Press the **Ctrl**+**Alt**+**Delete** keys simultaneously. The **Windows Task Manager** window appears.

   2 Press and release **Alt** to highlight the menu bar, and press the **Right Arrow** → key to select **Shut Down**.

   3 Press **Enter**.

   4 Press **R** to select restart.

4 If this procedure does not work, press and hold the power button or slide and hold the power switch until the computer turns off.

Why is the sound of my computer's fan so loud?

The computer's fan may be running at a high speed to cool the CPU. By lowering the CPU speed, you also lower the speed and noise level of the computer's fan. If your computer comes with the PowerPanel™ utility[1], use it to lower the CPU speed. If your computer does not come with the PowerPanel utility, use the power schemes to lower the CPU speed.

To lower the CPU speed using the PowerPanel utility:

1 On the Windows® taskbar, right-click either the **CPU** icon or **Profile** icon , depending on the model you purchased.

2 Select **Edit/Create Profiles**. The **AC Power Profile Editor** window appears.

3 Double-click **System** to open the **System** submenu if it is not already open.

4 Double-click **Thermal Control Strategy - Performance**, and select **Quiet**.

5 Restart your computer.

1 Available on selected models.

Draft 1

✍ See PowerPanel Help for more information.

To lower the CPU speed using the power schemes:

1. Click **Start** on the Windows® taskbar, and click **Control Panel**.
2. Click **Performance and Maintenance**, and click **Power Options**. The **Power Options Properties** window appears.
3. Select **Portable/Laptop** in the Power schemes box.
4. Click **Apply**.
5. Click **OK**.

Why does the System Properties dialog box display a slower CPU speed than the maximum?

This is normal. Because your computer's CPU utilizes a type of CPU speed controlling technology for power conservation purposes, System Properties may display the CPU's current speed instead of the maximum speed.

Why don't my changes appear on the computer screen (LCD)?

You may need to refresh the computer screen. Press the **Windows** key ⊞ and press **D** twice.

Draft 1

Troubleshooting Your Computer (Windows 2000)

What do I do if my computer won't start?

- ❑ Make sure the computer is securely plugged into a power source and turned on. Make sure the power indicator shows the power is on.
- ❑ Make sure the battery is inserted properly and charged.
- ❑ Make sure the floppy disk drive (if applicable) is empty.
- ❑ If the computer is plugged into a power strip or uninterruptible power supply (UPS), make sure the power strip or UPS is turned on and working.
- ❑ If you are using an external display, make sure it is plugged into a power source and turned on. Make sure the brightness and contrast controls are adjusted correctly. See the guide that came with your display for details.
- ❑ Disconnect the AC adapter and remove the battery. Wait one minute. Reattach the AC adapter and reinsert the battery. Turn on the power.
- ❑ Condensation may cause the computer to malfunction. If this occurs, do not use the computer for at least one hour.
- ❑ If the computer still does not turn on, follow these steps:

  1 Unplug the power cord and remove the battery.

  2 (For models with a reset button) Use a thin, straight object (such as a paper clip) to press the reset button.

  3 Reinsert the power cord and the battery.

  4 Turn on the computer.

What do I do if a BIOS error appears when my computer starts?

If the message "Press <F1> to resume, <F2> to setup" appears at the bottom of the screen, follow these steps:

1 Press **F2**. The **BIOS Setup** menu appears.

2 Set the date (month/day/year). Press **Enter**.

3 Press the **Down Arrow** key ↓ to select **System Time**, and then set the time (hour: minute: second). Press **Enter**.

Draft 1

4 Press the **Right Arrow** key → to select the **Exit** tab, and then press the **Down Arrow** key ↓ to select **Get Default Values**. The message **Load default values for all SETUP items** appears.

5 Press **Enter**. The **Setup Confirmation** window appears.

6 Select **Yes**, and press **Enter**.

7 Select **Exit (Save Changes)**, and press **Enter**. The **Setup Confirmation** window appears again.

8 Select **Yes**, and press **Enter**. The computer restarts.

✍ If this occurs on a regular basis, contact Sony Computing Support (http://www.sony.com/pcsupport).

What do I do if the message, "Operating system not found" appears when my computer starts, and why won't Windows start?

- Make sure the computer does not have a "non-bootable" floppy disk in the floppy disk drive (if applicable).
- If a non-bootable floppy disk is in the drive:
  1. Remove the floppy disk.
  2. Restart the computer and confirm that the Microsoft® Windows® operating system starts properly.
- If Windows still does not start, follow these steps to initialize the BIOS:
  1. If there is a disk in the floppy disk drive, then remove it.
  2. Turn off the computer.
  3. Remove any peripheral devices connected to the computer.
  4. Restart the computer.
  5. Press **F2** when the Sony logo appears. The **BIOS Setup** window appears.
  6. Press the **Right Arrow** key → to select the **Exit** menu.
  7. Press the **Down Arrow** key ↓ to select **Get Default Values**. The message **Load default values for all SETUP items** appears.
  8. Press **Enter**. The **Setup Confirmation** window appears.

Draft 1

9 Select **Yes**, and press **Enter**.

10 Select **Exit (Save Changes)**, and press **Enter**. The **Setup Confirmation** window appears again.

11 Select **Yes**, and press **Enter**. The computer restarts.

If your computer continues to display the message "Operating system not found," and Windows does not start, use your supplied System Recovery CDs to restore the programs that shipped with your computer. See "Using the System Recovery CDs" on page 45 for more information.

> ⚠ **The System Recovery CD restores your computer to its original state, so user data and applications will be lost.**

Why does my computer stop responding? Why can't I turn off my computer?

It is best to turn off your computer using the Turn Off Computer option on the Microsoft® Windows® Start menu, located on the taskbar. Using other methods, including those listed below, may result in loss of unsaved data.

- Click **Start** on the Windows® taskbar, and select **Shut Down**. When the **Shut Down Windows** window appears, make sure **Shut down** is selected, and click **OK**.
- If your computer does not turn off, press the **Ctrl**+**Alt**+**Delete** keys simultaneously. When the **Windows Security** dialog box appears, click **Shut Down**, and select **Shut Down** again from the **Shut Down Windows** window.
- If your computer still does not turn off, press and hold the power button or slide and hold the power switch until the computer shuts down.
- If your computer stops responding while playing a CD or DVD, press the **Ctrl**+**Alt**+**Delete** keys simultaneously. You can turn off the computer from the **Windows Security** dialog box.

> ✍ Pressing the **Ctrl**+**Alt**+**Delete** keys simultaneously or turning off the computer with the power button or switch may cause loss of data.

- Remove the AC adapter and battery.

Draft 1

Why won't my computer enter Standby or Hibernate mode?

Your computer's operating system may become unstable if the operating mode is changed before the computer completely enters Standby or Hibernate mode.

To restore the computer to normal operating stability:

1. Close all open programs.
2. Restart the computer. Follow these steps:
    1. Press the **Windows** key ⊞.
    2. Press **U**.
    3. Press **R** to select restart.
    4. Press **Enter**.
3. If the computer does not restart, follow these steps:
    1. Press the **Ctrl**+**Alt**+**Delete** keys simultaneously. The **Windows Security** dialog box appears.
    2. Press the **Right Arrow** → key to select **Shut Down**.
    3. Press **Enter**.
    4. Press **R** to select restart.
    5. Press **Enter**.
4. If this procedure does not work, press and hold the power button or slide and hold the power switch until the computer shuts down.

Why don't my changes appear on the computer screen (LCD)?

You may need to refresh the computer screen. Press the **Windows** key ⊞ and press **D** twice.

Draft 1

Support Options

If you have questions about your computer or the preinstalled programs, refer to the following sources for answers in the sequence listed below.

1 **VAIO® Computer User Guide**
The on-screen VAIO® Computer User Guide and the printed VAIO® Computer Quick Start provide information on how to maximize your computer capabilities and solve common problems.

2 **Program Guides and Help Files**
The preinstalled programs on your computer may come with individual help guides. These guides are stored on the hard disk as on-screen Help files. You can find the Help files from the Help menu under the specific program.

3 **Operating System Online Support**
Your computer comes preinstalled with a Microsoft® Windows® operating system. For operating system support, you can visit Microsoft® customer support at: http://support.microsoft.com/directory/.

4 **VAIO Support Agent**
You can find VAIO Support Agent by clicking **Start** and **All Programs** (**Programs** for Windows® 2000) and **VAIO Support** and **VAIO Support Agent**. Using advanced diagnostic technology, Sony's VAIO Support Agent runs scheduled protections of your programs, network settings, and other important program settings. When your program is protected, you can use VAIO Support Agent to repair program problems by restoring the program to any of the previously protected states.

5 **Sony Computing Support**
This service provides instant access to information on commonly encountered problems. Type a description of the problem and the Knowledge Database searches for the corresponding solutions online. You can visit Sony Computing Support at: http://www.sony.com/pcsupport.

Draft 1

Index

Draft 1

A

AC adapter 26
    connecting 28
Application Recovery CD 42

B

battery
    charging 26
    indicator 22
    port 20
    UNLOCK/LOCK latch 23
brightness control 29
buttons
    left 19
    power 22
    right 19

C

caps lock 19
computer
    cables 50
    care 49
    cleaning 51
    controls and connectors 19
    LCD screen 51
    online support 63
    specifications 16
    specifications (online) 33
    storage 50
    troubleshooting 54, 59
    turning off 36
    turning on 26
    unpacking 16
    updates 33, 34
connecting
    dial-up 34
controls 19
    brightness 29

D

DC IN port 20
dial-up connection 34

E

Electronic Flyer 33, 34
Energy Star 5
Ethernet port 20

F

faxes
    laws governing 10

H

handling the LCD screen 51
hard disk drive
    indicator 19
headphone jack 21
help 32, 53

I

i.LINK port 21
indicators
    battery 22
    caps lock 19
    hard disk drive 19
    Memory Stick media 21
    num lock 19
    scroll lock 19
    Wireless LAN 22

Draft 1

input devices 9
interference 9
internal speaker 19
Internet connection 34
J
jacks
headphone 21
microphone 21
modem jack 22
K
keyboard 19
L
LCD screen
handling 51
locating 19
M
maintenance 51
manual 32
Memory Stick media
indicator 21
slot 21
microphone jack 21
model number 19
modem
laws governing 10
modem jack 22
Monitor (VGA) port 20
Monitor port 20
N
network connector 20
num lock 19
O
online support 63
online user guide 32
output devices 9
P
PC Card slot 21
eject button 21
phone
laws governing 10
ports
battery 20
DC IN 20
i.LINK 21
USB 21
VGA (monitor) 20
power button 29
power source 26
programs
locating 40
R
radio interference 9
Recovery CDs 42
regulatory information 8
reset button 23
restoring data 42
S
scroll lock indicator 19
shutting down computer 36
software
locating 40
specifications 16
specifications (online) 33
starting computer 26
startup problems 37
support
Sony 53
System Recovery CD 45
T
technical support 53
telephone line jack 22
touchpad 19
using 30
troubleshooting 54, 59
startup 37
turning off computer 36

Draft 1

turning on computer 26
TV
    interference 9
U
UNLOCK/LOCK latch 23
unpacking the computer 16
updates 33, 34
USB port 21
user guide 32
V
ventilation fan 23
W
Wireless LAN
    indicator 22
    switch 19

Draft 1

http://www.sony.com/vaio

Printed in Japan
© 2003 Sony Electronics Inc.
4-671-720-11