FCC TEST REPORT

according to

FCC Rules and Regulations

Part 15 Subpart C

Applicant	Sony Corporation
Address	Gate City Osaki West Tower Osaki East Tec. 1-11-1 Osaki Shinagawa-Ku, Tokyo, 141-0032 Japan
Manufacturer	Topco corporation
Address	No.8, Wu-Chung Rd., Wu-Ku industrial Park, Wu-Ku Hsiang, Taipei Hsien 248, Taiwan, R.O.C
Equipment	Network Camera
Model No.	SNC-M3W
FCC ID	AK8SNCM3W
Trade Name	Sony

- The test result refers exclusively to the test presented test model / sample.,
- Without written approval of ***E**xclusive **C**ertification **C**orp.* the test report shall not be reproduced except in full.

Contents

1. Report of Measurements and Examinations 4
   1.1. List of Measurements and Examinations 4
   1.2. Antenna Requirements 5
   1.3. Test of Conducted Emission 6
   1.4. Test of Radiated Emission 8
   1.5. 6dB Bandwidth 9
   1.6. Maximum Peak Output Power 9
   1.7. Band Edges Measurement 10
   1.8. Power Spectral Density 10
   1.9. Restricted Bands of Operation 11
   1.10. Labeling Requirement 11
   1.11. RF Exposure 12
2. Test Configuration of Equipment under Test 14
   2.1. Test Mode and Test Software 14
   2.2. Description of Test System 14
   2.3. Connection Diagram of Test System 14
   2.4. Feature of Equipment under Test 15
   2.5. RF Module Specifications 16
   2.6. History of this test report 16
3. General Information of Test 17
4. Test Result and Data 18
   4.1. Antenna Requirement 18
   4.2. Test Result of Conducted Emission 19
   4.3. RF Portion 26
   4.4. 6dB Bandwidth Measurement Data 32
   4.5. Peak Output Power Measurement Data 35
   4.6. Band Edges Measurement Data 38
   4.7. Note on Band edge Emission 42
   4.8. Power Spectral Density Measurement Data 45
5. List of Measuring Equipment Used 48
Appendix A. Photographs of EUT ..... A1 ~ A10

CERTIFICATE OF COMPLIANCE

according to

FCC Rules and Regulations

Part 15 Subpart C

Applicant	Sony Corporation
Address	Gate City Osaki West Tower Osaki East Tec. 1-11-1 Osaki Shinagawa-Ku, Tokyo, 141-0032 Japan
Manufacturer	Topco corporation
Address	No.8, Wu-Chung Rd., Wu-Ku industrial Park, Wu-Ku Hsiang, Taipei Hsien 248, Taiwan, R.O.C
Equipment	Network Camera
Model No.	SNC-M3W
FCC ID	AK8SNCM3W

I **HEREBY** CERTIFY THAT :

The measurements shown in this test report were made in accordance with the procedures given in **ANSI C63.4.** The equipment was ***passed*** the test performed according to **FCC Rules and Regulations Part 15 Subpart C (2002).** The test was carried out on Oct. 08, 2004 at ***E****xclusive* ***C****ertification* ***C****orp.*

Signature

Anson Chou / Manager

1. Report of Measurements and Examinations

1.1. List of Measurements and Examinations

FCC Rule	. Description of Test	Result
15.203	. Antenna Requirement	Pass
15.207	. Conducted Emission	Pass
15.209	. Radiated Emission	Pass
15.247(a)(2)	. 6dB Bandwidth	Pass
15.247(b)	. Maximum Peak Output Power	Pass
15.247(c)	. 100kHz Bandwidth of Frequency Band Edges	Pass
15.247(d)	. Power Spectral Density	Pass
1.1307 1.1310 2.1091 2.1093	. RF Exposure Compliance	Pass

Test by: Jerry

1.2. Antenna Requirements

1.2.1. Standard Applicable

For intentional device, according to FCC 47 CFR Section 15.203, an intentional radiator shall be designed to ensure that no antenna other than that furnished by the responsible party shall be used with the device.

And according to FCC 47 CFR Section 15.247 (b), if transmitting antennas of directional gain greater than 6dBi are used, the power shall be reduced by the amount in dB that the directional gain of the antenna exceeds 6dBi.

1.3. Test of Conducted Emission

Conducted Emissions were measured from 150 kHz to 30 MHz with a bandwidth of 9 KHz on the 115 VAC power and return leads of the EUT according to the methods defined in ANSI C63.4-1992 Section 3.1. The EUT was placed on a nonmetallic stand in a shielded room 0.8 meters above the ground plane as shown in section 1.3.2. The interface cables and equipment positioning were varied within limits of reasonable applications to determine the position produced maximum conducted emissions.

1.3.1. Test Procedures

a. The EUT was placed 0.4 meter from the conducting wall of the shielding room was kept at least 80 centimeters from any other grounded conducting surface.
b. Connect EUT to the power mains through a line impedance stabilization network (LISN).
c. All the support units are connecting to the other LISN.
d. The LISN provides 50 ohm coupling impedance for the measuring instrument.
e. The FCC states that a 50 ohm, 50 microhenry LISN should be used.
f. Both sides of AC line were checked for maximum conducted interference.
g. The frequency range from 150 kHz to 30 MHz was searched.
h. Set the test-receiver system to Peak Detect Function and Specified Bandwidth with Maximum Hold Mode.

1.3.2. Typical Test Setup Layout of Conducted Emission

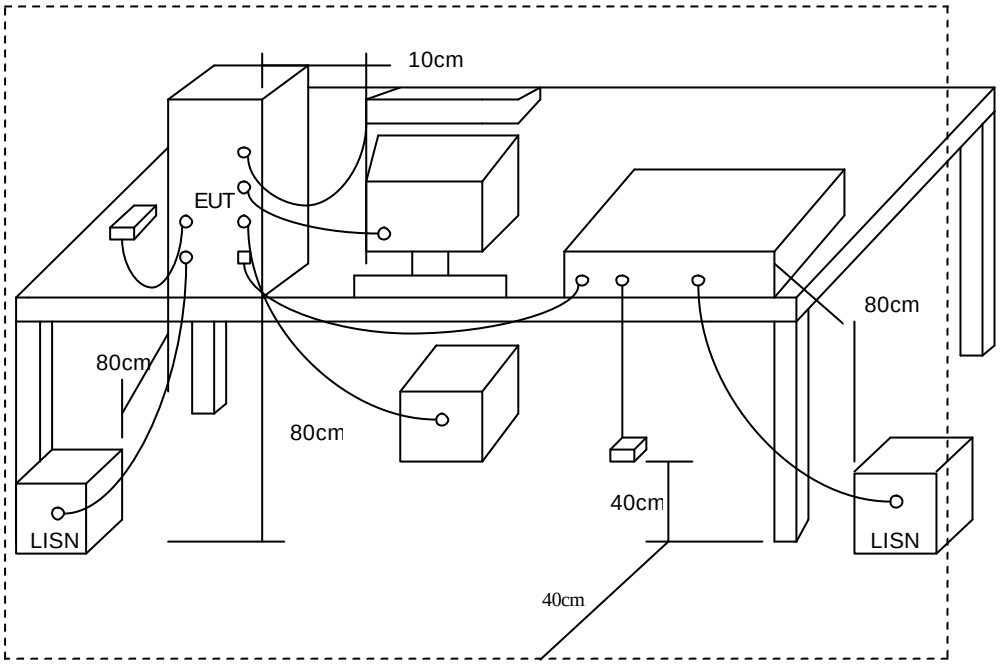

1.3.3. Conducted Emission Requirement

Except for A digital devices, for equpment that is designed to be connected to the public utility (AC) power line on any frequency voltage that is conducted back onto the AC power line on ant frequency or frequencies within the band 150KHz to 30MHz shall not exceed the limits in the following table, as measured using a 50µH/50 ohms line impeddance stabilization network (LISN). Compliance with the provisions of this paragraph shall be based on the measurement of the Radio frequency voltage between each power line and ground at the power terminal. The lower limit applies at the band edges.

Frequency (MHz)	**Quasi Peak (dB µ V)**	**Average (dB µ V)**
0.15 – 0.5	66-56*	56-46*
0.5 – 5.0	56	46
5.0 – 30.0	60	50

1.4. Test of Radiated Emission

Radiated emissions from 30 MHz to 25 GHz were measured according to the methods defines in ANSI C63.4-2001. The EUT was placed, 0.8 meter above the ground plane, as shown in section 1.4.2. The interface cables and equipment positions were varied within limits of reasonable applications to determine the positions producing maximum radiated emissions

1.4.1. Test Procedures

1. The EUT was placed on a rotatable table top 0.8 meter above ground.
2. The EUT was set 3 meters from the interference receiving antenna which was mounted on the top of a variable height antenna tower.
3. The table was rotated 360 degrees to determine the position of the highest radiation.
4. The antenna is a broadband antenna and its height is varied between one meter and four meters above ground to find the maximum value of the field strength both horizontal polarization and vertical polarization of the antenna are set to make the measurement.
5. For each suspected emission the EUT was arranged to its worst case and then tune the antenna tower (from 1 M to 4 M) and turn table (from 0 degree to 360 degrees) to find the maximum reading.
6. Set the test-receiver system to Peak or CISPR quasi-peak Detect Function and specified bandwidth with Maximum Hold Mode.
7. If the emission level of the EUT in peak mode was 3 dB lower than the limit specified, then testing will be stopped and peak values of EUT will be reported, otherwise, the emissions which do not have 3 dB margin will be repeated one by one using the quasi-peak method and reported.
8. For testing above 1GHz, the emission level of the EUT in peak mode was 20dB lower than average limit (that means the emission level in peak mode also complies with the limit in average mode), then testing will be stopped and peak values of EUT will be reported, otherwise, the emissions will be measured in average mode again and reported.

1.4.2. Typical Test Setup Layout of Radiated Emission

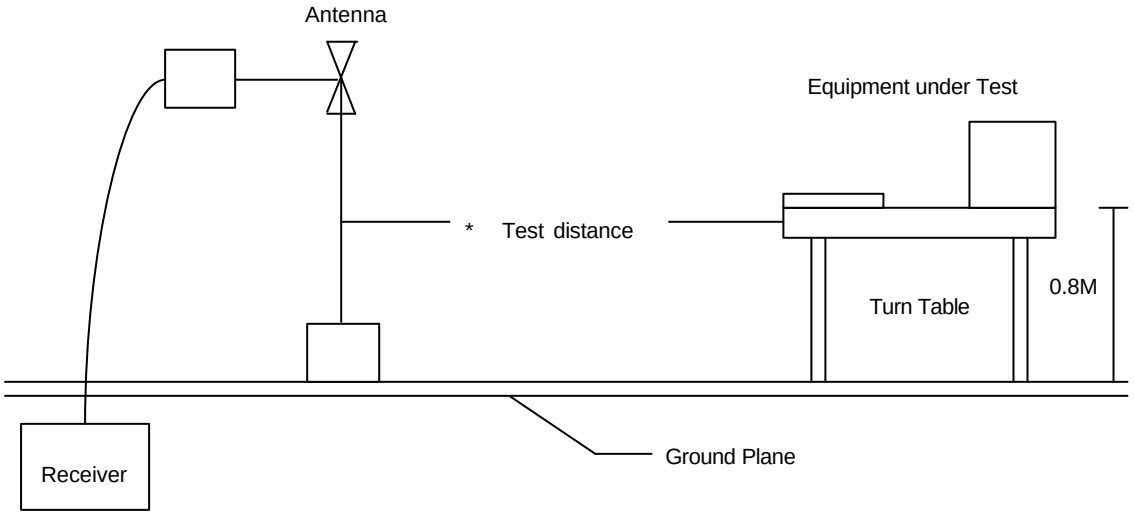

1.5. 6dB Bandwidth

1.5.1. Test Procedure：

1. The transmitter output was connected to the spectrum analyzer.
2. Set RBW of spectrum analyzer to 100 KHz and VBW to 100 KHz.
3. The 6 dB bandwidth is defined as the total spectrum the power of which is higher than peak power minus 6 dB.

1.5.2. Test Setup Layout：

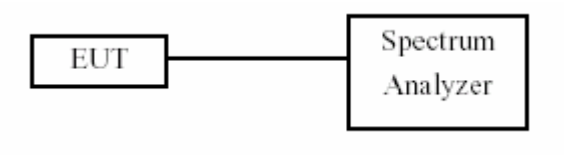

1.6. Maximum Peak Output Power

1.6.1. Test Procedure：

The antenna port（RF output）of the EUT was connected to the input（RF input）of a spectrum analyzer. Power was read directly from the spectrum analyzer and cable loss connection was added to the reading to obtain power at the EUT antenna terminal. The EUT Output Power was set to maximum to produce the worse case test result.

1.6.2. Test Setup Layout：

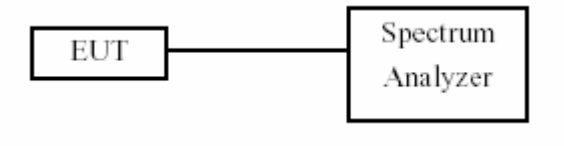

1.7. Band Edges Measurement

1.7.1. Test Procedure：

1. The transmitter output was connected to the spectrum analyzer via a low lose cable.
2. Set both RBW and VBW of spectrum analyzer to 100 KHz with convenient frequency span including 100 MHz bandwidth from band edge.
3. The band edges was measured and recorded.

1.8. Power Spectral Density

1.8.1. Test Procedure：

1. The transmitter output was connected to spectrum analyzer.
2. The spectrum analyzer' s resolution bandwidth were set at 3KHz RBW and 30KHz VBW as that of the fundamental frequency. Set the sweep time=span/3KHz.
3. The power spectral density was measured and recorded.
4. The Sweep time is allowed to be longer than span/3KHz for a full response of the mixer in the spectrum analyzer.

1.8.2. Test Setup Layout：

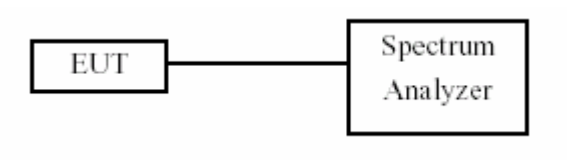

1.9. Restricted Bands of Operation

Only spurious emissions are permitted in any of the frequency bands listed below:

MHz	MHz	MHz	GHz
0.09000 – 0.11000	16.42000 – 16.42300	399.9 – 410.0	4.500 – 5.250
0.49500 – 0.505**	16.69475 – 16.69525	608.0 – 614.0	5.350 – 5.460
2.17350 – 2.19050	16.80425 – 16.80475	960.0 – 1240.0	7.250 – 7.750
4.12500 – 4.12800	25.50000 – 25.67000	1300.0 – 1427.0	8.025 – 8.500
4.17725 – 4.17775	37.50000 – 38.25000	1435.0 – 1626.5	9.000 – 9.200
4.20725 – 4.20775	73.00000 – 74.60000	1645.5 – 1646.5	9.300 – 9.500
6.21500 – 6.21800	74.80000 – 75.20000	1660.0 – 1710.0	10.600 – 12.700
6.26775 – 6.26825	108.00000 – 121.94000	1718.8 – 1722.2	13.250 – 13.400
6.31175 – 6.31225	123.00000 – 138.00000	2200.0 – 2300.0	14.470 – 14.500
8.29100 – 8.29400	149.90000 – 150.05000	2310.0 – 2390.0	15.350 – 16.200
8.36200 – 8.36600	156.52475 – 156.52525	2483.5 – 2500.0	17.700 – 21.400
8.37625 – 8.38675	156.70000 – 156.90000	2655.0 – 2900.0	22.010 – 23.120
8.41425 – 8.41475	162.01250 – 167.17000	3260.0 – 3267.0	23.600 – 24.000
12.29000 – 12.29300	167.72000 – 173.20000	3332.0 – 3339.0	31.200 – 31.800
12.51975 – 12.52025	240.00000 – 285.00000	3345.8 – 3358.0	36.430 – 36.500
12.57675 – 12.57725	322.00000 – 335.40000	3600.0 – 4400.0	Above 38.6
13.36000 – 13.41000			

**: Until February 1, 1999, this restricted band shall be 0.490-0.510 MHz

1.10. Labeling Requirement

The device shall bear the following statement in a conspicuous location on the device:

This device complies with part 15 of the FCC Rules. Operation is subject to the following two conditions: (1) This device may not cause harmful interference, and (2) this device must accept any interference received, including interference that may cause undesired operation.

1.11. RF Exposure

FCC Rules and Regulations Part 1.1307, 1.1310, 2.1091, 2.1093:

RF Exposure Compliance

1.11.1. Limit For Maximum Permissible Exposure (MPE)

(A) Limits for Occupational / Controlled Exposure

Frequency Range (MHz)	Electric Field Strength (E) (V/m)	Magnetic Field Strength (H) (A/m)	Power Density (S) (mW/ cm²)	Averaging Time $\|E\|^2$,$\|H\|^2$ or S (minutes)
0.3-3.0	614	1.63	(100)*	6
3.0-30	1842/f	4.89/f	(900/f)*	6
30-300	61.4	0.163	1.0	6
300-1500			F/300	6
1500-100,000			5	6

(B) Limits for General Population / Uncontrolled Exposure

Frequency Range (MHz)	Electric Field Strength (E) (V/m)	Magnetic Field Strength (H) (A/m)	Power Density (S) (mW/cm²)	Averaging Time $\|E\|^2$,$\|H\|^2$ or S (minutes)
0.3-1.34	614	1.63	(100)*	30
1.34-30	824/f	2.19/f	(180/f)*	30
30-300	27.5	0.073	0.2	30
300-1500			F/1500	30
1500-100,000			1.0	30

F=frequency in MHz *Plane-wave equivalent power density

1.11.2. MPE Calculations

$$E\ (V/m) = \frac{\sqrt{30 \times P \times G}}{d} \qquad \text{Power Density: Pd } (mW/cm^2) = \frac{E^2}{3770}$$

E＝Electric field (V/m)

P＝Peak output power (W)

G＝Antenna numeric gain (numeric)

d＝Separation distance (m)

Because the EUT is belong to General Population/ Uncontrolled Exposure. So the Limit of Power Density is 10 W/m². We can change the formula to:

$$d = \sqrt{\frac{30 \times P \times G}{3770}}$$

1.11.3. FCC Radiation Exposure Statement

This equipment complies with FCC radiation exposure limits set forth for an uncontrolled environment. In order to avoid the possibility of exceeding the FCC radio frequency exposure limits, human proximity to the antenna shall not be less than 20cm (8 inches) during normal operation. Proposed RF exposure safety information to include in User' s Manual.

2. Test Configuration of Equipment under Test

2.1. Test Mode and Test Software

The following test mode and test software was performed for conduction and radiation test:

- 802.11b (CH LO: 2412MHz) • 802.11b (CH MID: 2437MHz) • 802.11b (CH HI: 2462MHz)
- An executive programs, "TELNET.exe" Application under WIN XP.

2.2. Description of Test System

Device	Manufacturer	Model No.	Description
PC	IBM	IGV	Power Cable, Unshielding 1.8 m
Monitor	SlimAGE	510A	Power Cable, Adapter Unshielding 1.8 m Data Cable, VGA shielding 1.35 m
Keyboard	IBM	KB-0225	Data Cable, PS2 shielding 1.85 m
Mouse	IBM	MO28VO	Data Cable, USB shielding 1.85 m
Notebook (Remote Site)	IBM	R40(2723-BV1)	Power Cable, Adapter Unshielding 1.8 m
Modem	ACEXX	DM-1414	Power Cable, Adapter Unshielding 1.8 m Data Cable, Unshielding 1.35 m
Printer	HP	Desk Jet400	Power Cable, Adapter Unshielding 1.8 m Data Cable, Shielding 1.6 m
Earphone	MIC	MIC-4	Earphone Cable, Unshielding 1.8 m

Use Cable:

Cable	Description
RJ-45	Unshielding, 1.8m

2.3. Connection Diagram of Test System

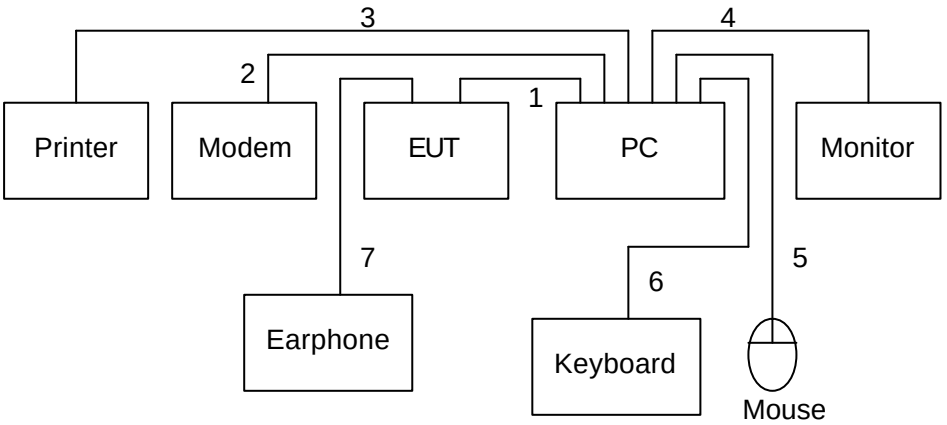

1. The RJ 45 cable is connected from PC to the EUT.
2. The I/O cable is connected from PC to the Modem.
3. The I/O cable is connected from PC to the Printer.
4. The I/O cable is connected from PC to the Monitor.
5. The I/O cable is connected from PC to the Mouse.
6. The I/O cable is connected from PC to the Keyboard.
7. The Earphone cable is connected from EUT to the Earphone.

2.4. Feature of Equipment under Test

Camera	
Image device	1/4-type CMOS
Number of effective pixels (H x V)	652 x 482
Pan range	+ 60 to -60 degrees
Tilt range	+ 10 to -60 degrees
Lens type	Fixed focal lens
Focal length	f=3.7 mm
Viewing angle	Horizontal: 51.0^0, Vertical: 38.9^0
Minimum object distance	80 cm
Video	
Compression format	MPEG-4, JPEG
Image size (H x V) Mpeg-4 mode JPEG mode	 400 x 480, 320 x 160, 160 x 120 400 x 480, 320 x 160, 160 x 120
Maximum frame rate Mpeg-4 mode JPEG mode	 Max. 30 fps (320 x 240) Max. 30 fps (320 x 240)
Audio	
Audio compression	G.726 (40, 32, 24, 16 Kbps)
Built-in microphone	Electret condenser microphone
Network	
Protocols	TCP/IP, ARP, ICMP, DHCP, DNS, HTTP, FTP, SMTP, NTP
Wireless LAN	
Standard	IEEE802.11B (2.4 GHz)
Transmission Speed	11Mbps/5.5Mbps/2Mbps/1Mbps (Auto Switch)
Security	WEP (64/128 bits)
Interface	
Ethernet	100Base-TX/10Base-T (RJ-45)
External microphone input	Mini-jack, 2.4 VDC plug-in power, 2.2 k ohm
Audio Line output	Mini-jack
General	
Weight	Approx. 14 oz (390 g)
Dimensions (Dia. x H)	4 3/8 x 4 1/8 inches (110 x 104 mm) (exclude projection port)
Power requirements	DC 5 V
Power consumption	7.5 W
Operating temperature	32 TO 104 ^{0}F (0 to +40 ^{0}C)
Storage temperature	-4 to +140 ^{0}F (-20 to +60 ^{0}C)
Operating humidity	20 to 80%, non-condensing
Storage humidity	20 to 95%, non-condensing
Supplied accessories	
	AC adaptor
	Stand
	Wire
	Wall-mount bracket
	Rubber foot
	CD-ROM (users guide, supplied program)
	Installation manual
System requirements	
Operating system	Windows® 2000/XP
Processor	Pentium® III, 1 GHz or higher (Recommendation; Pentium IV, 2GHz or higher)
Memory	265 MB RAM minimum
Web browser	Internet Explorer® version 5.5 or 6.0

2.5. RF Module Specifications

Host/Radio Interface	Generic Slave Mode
Type of Modulation	DSSS
Number of Channels	USA/Canada: 11, European: 13, Japan: 13, 14
Frequency Band	2.412 GHz ~ 2.4835 GHz
Carrier Frequency of each channel	CH1: 2412, CH2: 2417, CH3: 2422, CH4: 2427, CH5: 2432, CH6: 2437, CH7: 2442, CH8: 2447, CH9: 2452, CH10: 2457, CH11: 2462, CH12: 2467, CH13: 2472, CH14: 2484 MHz
Bandwidth of each channel	22MHz
Maximum Output Power to Antenna	11Mbps, CCK = 18dBm
IF & L.O. frequency	IF: 374MHz, LO: 2026~2126MHz
Type of Antenna Connector (Ex: SMA,TNC, MCX, MMCX, UFC…etc)	0~6 GHz Mini RF Connector
Antenna Type / Class and Gain	PIFA
Function Type	Transceiver
Power Rating (DC/AC , Voltage)	DC3.3V, (647.2mA x 3.3V = 2.13W)
Duty Cycle	95.8
Basic function of product	IEEE 802.11b
Temperature Range (Operating)	-5°C ~ 60°C
Humidity	90% max

2.6. History of this test report

ORIGINAL.

3. General Information of Test

Test Site:	Exclusive Certification Corp. 4F-2, No. 28, Lane 78, Xing-Ai Rd. Nei-hu, Taipei City 114 Taiwan R.O.C.
Test Site Location (OATS1-SD):	No.68-1, Shihbachongsi, shihding Township, Taipei County 223, Taiwan, R.O.C.
Test Voltage:	AC 110V/ 60Hz
Test in Compliance with:	ANSI C63.4-1992 FCC Part 15 Subpart C
Frequency Range Investigated:	Conducted: from 150kHz to 30 MHz Radiation: from 30 MHz to 24620MHz
Test Distance:	The test distance of radiated emission from antenna to EUT is 3 M.

4. Test Result and Data

4.1. Antenna Requirement

4.1.1. Antenna Construction and Directional Gain

Antenna type: Integral PIFA Antenna

Antenna Gain: 3 dBi.

4.2. Test Result of Conducted Emission

EUT	: SNC-M3/W		
Power	: 110V 60Hz	Pol/Phase	: NEUTRAL
Test Mode	: 802.11b CH LO	Temperature	: 25 ℃
Memo	:	Humidity	: 58 %

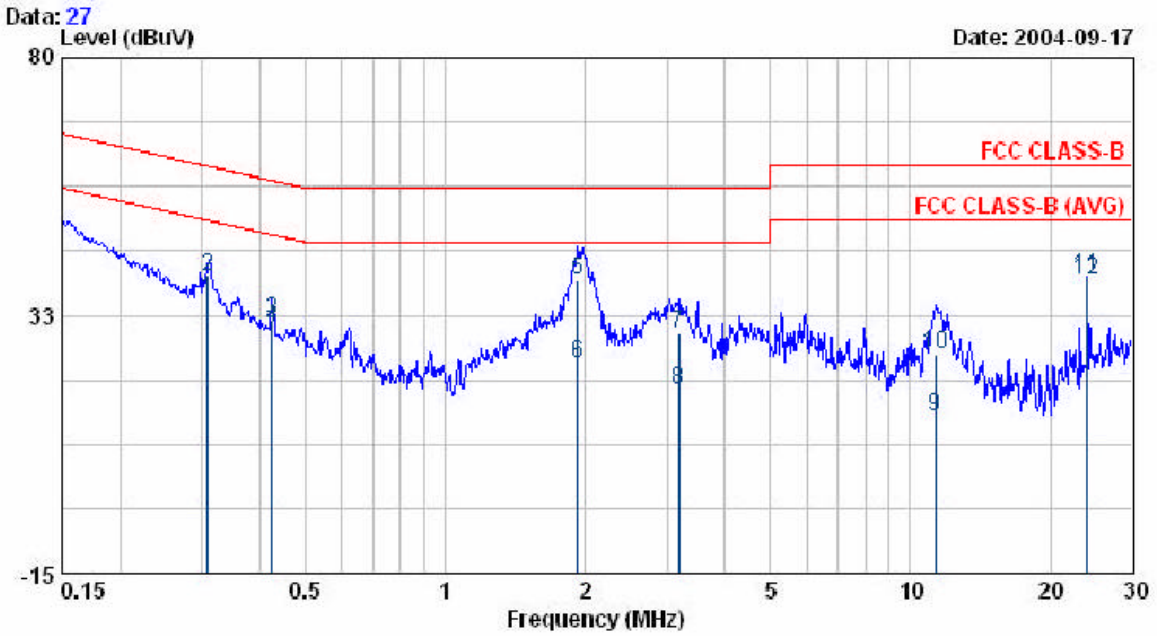

Freq	Read Level	Factor	Level	Limit	Over Limit	Remark
MHz	dBuV	dB	dBuV	dBuV	dBuV	
0.309	34.90	0.44	35.34	49.99	-14.64	AVERAGE
0.309	39.32	0.44	39.76	59.99	-20.22	QP
0.423	31.20	0.46	31.66	57.38	-25.72	QP
0.423	29.82	0.46	30.28	47.38	-17.10	AVERAGE
1.926	38.31	0.54	38.85	56.00	-17.15	QP
1.926	23.14	0.54	23.68	46.00	-22.32	AVERAGE
3.179	28.47	0.56	29.03	56.00	-26.97	QP
3.179	18.29	0.56	18.85	46.00	-27.15	AVERAGE
11.346	13.24	0.73	13.97	50.00	-36.03	AVERAGE
11.346	24.76	0.73	25.49	60.00	-34.51	QP
24.000	38.56	0.97	39.53	60.00	-20.47	QP
24.000	37.92	0.97	38.89	50.00	-11.11	AVERAGE

EUT	: SNC-M3/W		
Power	: 110V 60Hz	Pol/Phase	: LINE
Test Mode	: 802.11b CH LO	Temperature	: 25 ℃
Memo	:	Humidity	: 58 %

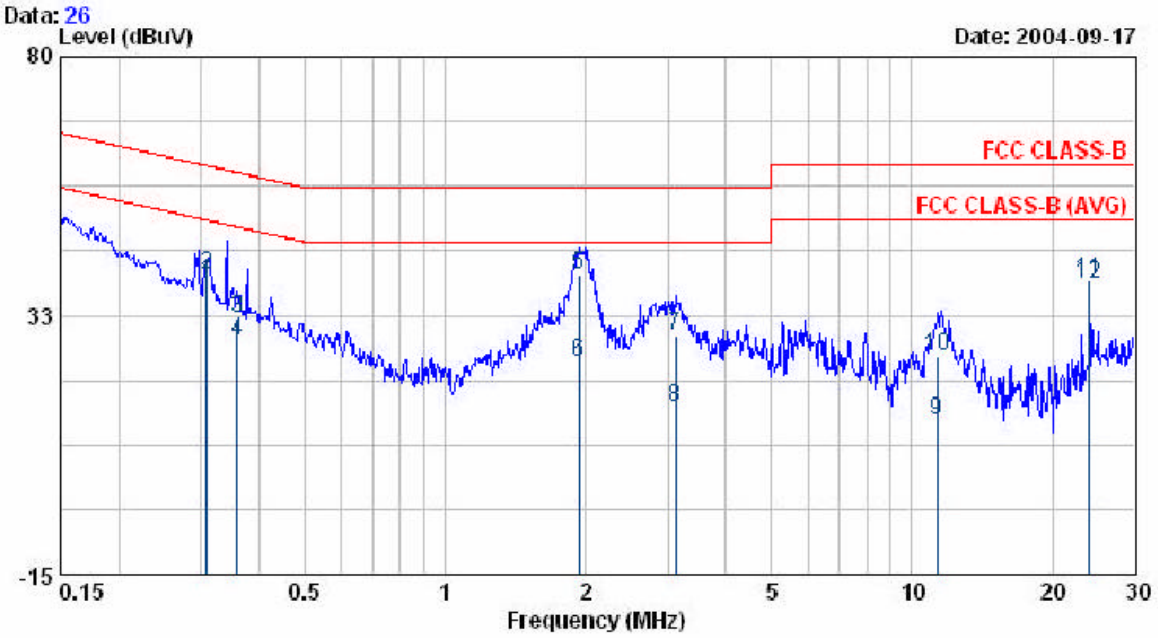

Freq	Read Level	Factor	Level	Limit	Over Limit	Remark
MHz	dBuV	dB	dBuV	dBuV	dBuV	
0.309	38.12	0.44	38.56	50.00	-11.44	AVERAGE
0.309	39.53	0.44	39.97	60.00	-20.03	QP
0.359	31.57	0.45	32.02	58.76	-26.74	QP
0.359	27.22	0.45	27.67	48.76	-21.09	AVERAGE
1.940	39.30	0.54	39.84	56.00	-16.16	QP
1.940	23.43	0.54	23.97	46.00	-22.03	AVERAGE
3.120	28.42	0.56	28.98	56.00	-27.02	QP
3.120	15.08	0.56	15.64	46.00	-30.36	AVERAGE
11.349	12.38	0.66	13.04	50.00	-36.96	AVERAGE
11.349	24.48	0.66	25.14	60.00	-34.86	QP
24.000	37.69	1.21	38.90	60.00	-21.10	QP
24.000	36.90	1.21	38.11	50.00	-11.89	AVERAGE

EUT	: SNC-M3/W		
Power	: 110V 60Hz	Pol/Phase	: NEUTRAL
Test Mode	: 802.11b CH MID	Temperature	: 25 ℃
Memo	:	Humidity	: 58 %

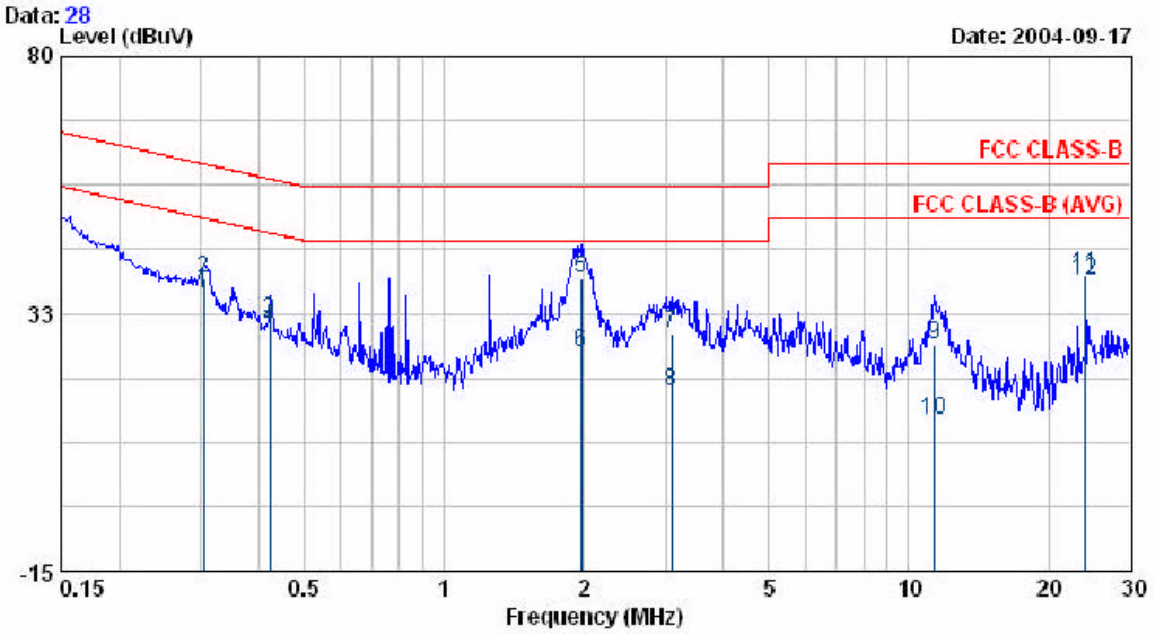

Freq	Read Level	Factor	Level	Limit	Over Limit	Remark
MHz	dBuV	dB	dBuV	dBuV	dBuV	
0.305	35.61	0.44	36.05	50.12	-14.07	AVERAGE
0.305	38.58	0.44	39.02	60.12	-21.10	QP
0.423	30.78	0.46	31.24	57.39	-26.15	QP
0.423	29.30	0.46	29.76	47.39	-17.63	AVERAGE
1.970	38.29	0.54	38.83	56.00	-17.17	QP
1.970	24.80	0.54	25.34	46.00	-20.66	AVERAGE
3.091	28.11	0.56	28.67	56.00	-27.33	QP
3.091	17.60	0.56	18.16	46.00	-27.84	AVERAGE
11.370	26.00	0.73	26.73	60.00	-33.27	QP
11.370	12.14	0.73	12.87	50.00	-37.13	AVERAGE
24.000	38.50	0.97	39.47	60.00	-20.53	QP
24.000	37.78	0.97	38.75	50.00	-11.25	AVERAGE

EUT	: SNC-M3/W		Pol/Phase	: LINE	
Power	: 110V 60Hz		Temperature	: 25	℃
Test Mode	: 802.11b CH MID		Humidity	: 58	%
Memo	:				

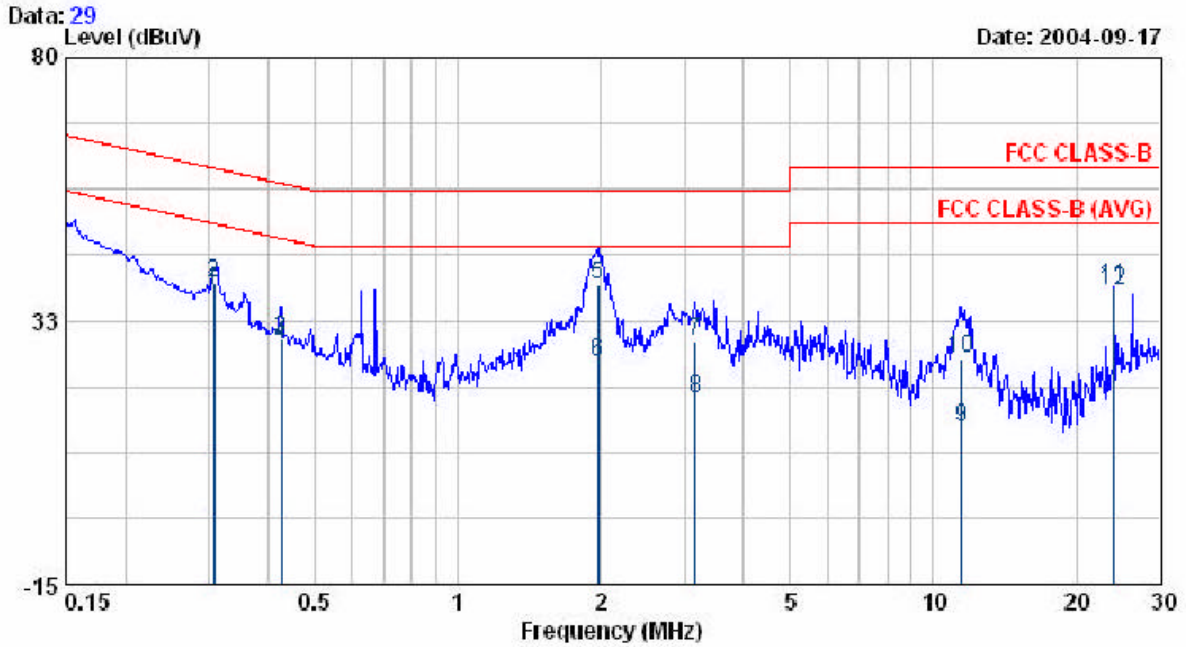

Freq	Read Level	Factor	Level	Limit	Over Limit	Remark
MHz	dBuV	dB	dBuV	dBuV	dBuV	
0.308	37.36	0.44	37.80	50.02	-12.22	AVERAGE
0.308	38.98	0.44	39.42	60.02	-20.60	QP
0.426	28.86	0.46	29.32	57.34	-28.01	QP
0.426	27.57	0.46	28.03	47.34	-19.30	AVERAGE
1.970	38.50	0.54	39.04	56.00	-16.96	QP
1.970	24.56	0.54	25.10	46.00	-20.90	AVERAGE
3.156	28.19	0.56	28.75	56.00	-27.25	QP
3.156	17.93	0.56	18.49	46.00	-27.51	AVERAGE
11.496	12.46	0.67	13.13	50.00	-36.87	AVERAGE
11.496	25.08	0.67	25.75	60.00	-34.25	QP
24.000	37.48	1.21	38.69	60.00	-21.31	QP
24.000	36.84	1.21	38.05	50.00	-11.95	AVERAGE

EUT	: SNC-M3/W		
Power	: 110V 60Hz	Pol/Phase	: NEUTRAL
Test Mode	: 802.11b CH HI	Temperature	: 25 ℃
Memo	:	Humidity	: 58 %

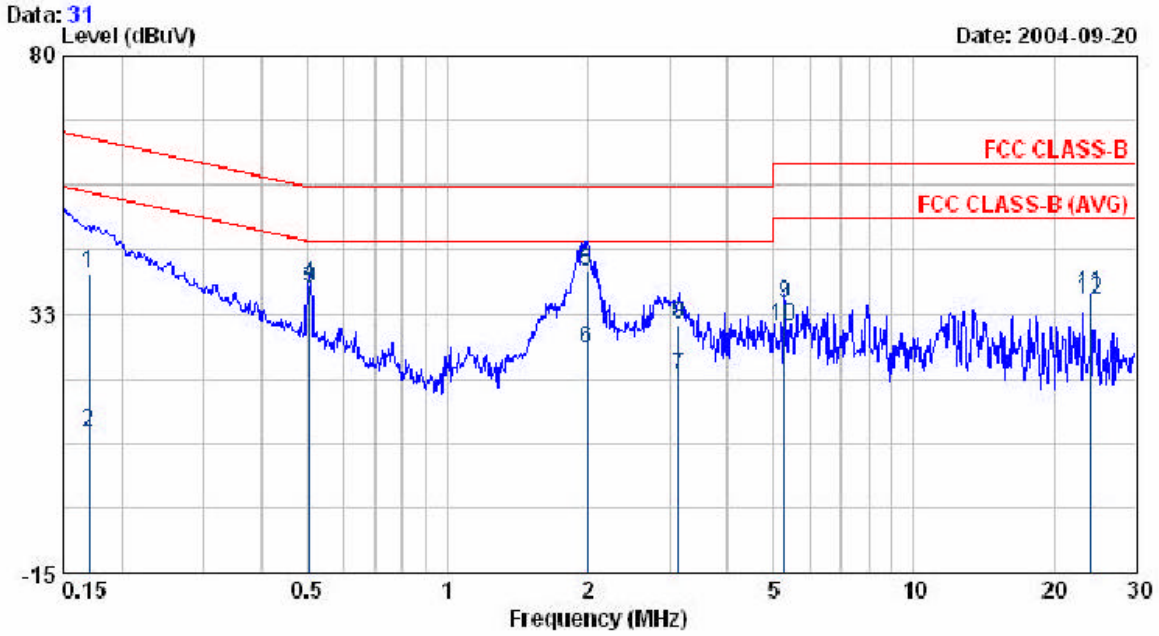

Freq	Read Level	Factor	Level	Limit	Over Limit	Remark
MHz	dBuV	dB	dBuV	dBuV	dBuV	
0.170	39.66	0.41	40.07	64.95	-24.88	QP
0.170	10.38	0.41	10.79	54.95	-44.16	AVERAGE
0.506	36.75	0.47	37.22	46.00	-8.78	AVERAGE
0.506	37.42	0.47	37.89	56.00	-18.11	QP
1.990	39.70	0.54	40.24	56.00	-15.76	QP
1.990	25.52	0.54	26.06	46.00	-19.94	AVERAGE
3.141	20.73	0.56	21.29	46.00	-24.71	AVERAGE
3.141	30.13	0.56	30.69	56.00	-25.31	QP
5.298	33.80	0.62	34.42	60.00	-25.58	QP
5.298	29.64	0.62	30.26	50.00	-19.74	AVERAGE
24.000	35.26	0.97	36.23	60.00	-23.77	QP
24.000	34.30	0.97	35.27	50.00	-14.73	AVERAGE

EUT	: SHC-M3/W		
Power	: 110V 60Hz	Pol/Phase	: LINE
Test Mode	: 802.11b CH HI	Temperature	: 25 ℃
Memo	:	Humidity	: 58 %

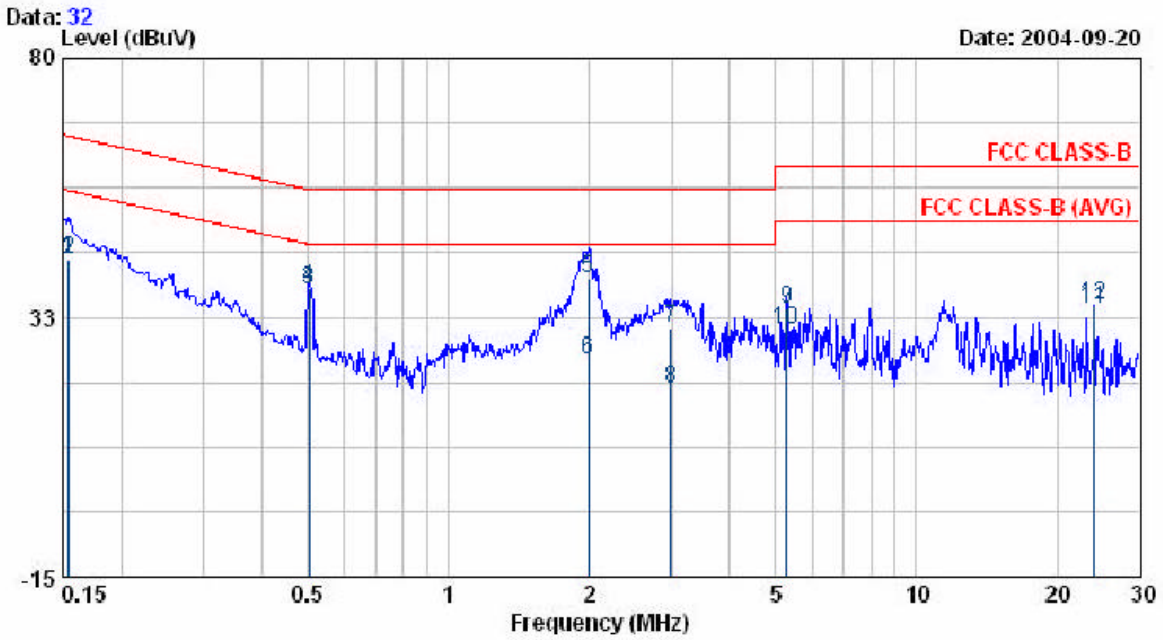

Freq	Read Level	Factor	Level	Limit	Over Limit	Remark
MHz	dBuV	dB	dBuV	dBuV	dBuV	
0.155	42.78	0.40	43.18	65.74	-22.56	QP
0.155	42.66	0.40	43.06	55.74	-12.68	AVERAGE
0.505	36.99	0.47	37.46	46.00	-8.54	AVERAGE
0.505	37.37	0.47	37.84	56.00	-18.16	QP
1.991	39.07	0.54	39.61	56.00	-16.39	QP
1.991	24.10	0.54	24.64	46.00	-21.36	AVERAGE
2.993	30.10	0.56	30.66	56.00	-25.34	QP
2.993	18.92	0.56	19.48	46.00	-26.52	AVERAGE
5.297	33.59	0.59	34.18	60.00	-25.82	QP
5.297	29.69	0.59	30.28	50.00	-19.72	AVERAGE
24.000	32.81	1.21	34.02	50.00	-15.98	AVERAGE
24.000	33.60	1.21	34.81	60.00	-25.19	QP

Test by: Carol

4.2.1. Photographs of Conducted Emission Test

FRONT VIEW
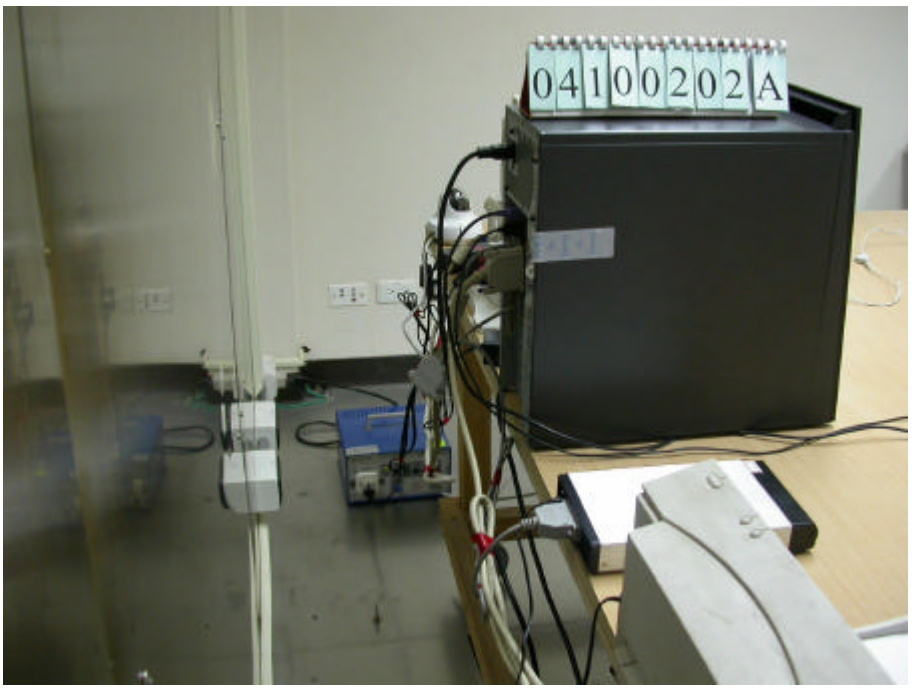
REAR VIEW