EXHIBIT B

Test Report

MEASUREMENT REPORT
of
CORDLESS TELEPHONE

Applicant	**:**	Sony Corporation
Model No.	**:**	SPP-A2470
EUT	**:**	Cordless Telephone with Answering System
FCC ID	**:**	AK8SPPA2470
Report No.	**:**	S2515389

Test by :

Training Research Co., Ltd.

TEL : 886-2-26935155 FAX : 886-2-26934440

2, Lane 194, Huan-Ho Street, Hsichih, Taipei Hsien 221, Taiwan, R.O.C.

CERTIFICATION

We here by verify that:

The test data, data evaluation, test procedures and equipment configurations shown in this report were made mainly in accordance with the procedures given in ANSI C63.4 (1992) as a reference. All test were conducted by ***Training Research Co., Ltd.***, 2, Lane 194, Huan-Ho Street, Hsichih, Taipei Hsien 221, Taiwan, R.O.C. Also, we attest to the accuracy of each.

We further submit that the energy emitted by the sample EUT tested as described in the report is **in compliance with** the technical requirements set forth in the FCC Rules Part 15 Subpart C Section 15.247.

Applicant	:	Sony Corporation
Model No.	:	SPP-A2470
EUT	:	Cordless Telephone with Answering System
FCC ID	:	AK8SPPA2470
Report No.	:	S2515389
Test Date	:	November 7, 2000

Prepared by: Jack Tsai

Approved by: Frank Tsai

Test by :

Training Research Co., Ltd.

TEL: 886-2-26935155 **FAX: 886-2-26934440**

2, Lane 194, Huan-Ho Street, Hsichih, Taipei Hsien 221, Taiwan, R.O.C.

Tables of Contents

I. GENERAL 5
1.1 Introduction 5
1.2 Description of EUT 5
1.3 Description of Support Equipment 5
1.4 Configuration of System Under Test 6
1.5 Verify the Frequency and Channel 7
1.5.1 Verify the Frequency Pairs 7
1.6 Test Procedure 8
1.7 Location of the Test Site 8
1.8 General Test Condition 8

II. Section 15.207: Power line conducted emissions for AC powered units 9
2.1 Test Condition & Setup 9
2.2 List of Test Instruments 9
2.3 Test Configuration 10
2.4 Test Result of Conducted Emissions 12
2.4.1 Base Station Transmit Only 12

III. Section 15.247(a)(2): Bandwidth for direct sequence system 17
3.1 Test Condition & Setup 17
3.2 Test Instruments Configuration 17
3.3 List of Test Instruments 17
3.4 Test Result of Bandwidth 18

IV. Section 15.247(a) (2) : Power Output 22
4.1 Test Condition & Setup 22
4.2 List of Test Instruments 23
4.3 Test Result of Fundamental Emission 24

V. Section 15.247(c) (2) : Spurious Emissions (Radiated) 25
5.1 Test Condition & Setup 25
5.2 List of Test Instruments 26
5.2.1 Duty Cycle Factor Measurement 26
5.3 Test Instruments Configuration 28
5.4 Test Result of Second Harmonic 30
5.5 Test Result of Spurious Radiated Emissions 31
5.5.1 Base and Handset Station Transmit Only 31

VI. Section 15.247(d) : Power Spectral Density 55
6.1 Test Condition & Setup 55
6.2 Test Instruments Configuration 56
6.3 List of Test Instruments..... 56
6.4 Required of Carrier Frequency 57
6.5 Test Result of Power Spectral Density 59

VII. Section 15.247(e): Processing Gain 63
7.1 Test Condition & Setup 63
7.2 Test Instruments Configuration 65
7.3 List of Test Instruments 66
7.4 Test Procedure 66
7.5 Test Result of Processing Gain 67

Appendix A: Set Up Procedure 69
Appendix B: Antenna Sketch 70
Appendix C: Part15.203 71
Appendix D: Security Code 72

I. GENERAL

1.1 Introduction

The following measurement report is submitted on behalf of Applicant in support of a Cordless Telephone certification in accordance with Part 2 Subpart J and Part 15 Subpart A and C of the Commission's Rules and Regulations.

1.2 Description of EUT

EUT	:	Cordless Telephone with Answering System
Model No.	:	SPP-A2470
FCC ID	:	AK8SPPA2470
Frequency Range	:	Base : 2.4048 – 2.4750 GHz Handset : 2.4048 – 2.4750 GHz
Support Channel	:	40 Channel
Modulation Skill	:	TDMA / Spread spectrum
Security Code	:	12-bit P/N code, 8-bit scramble, 16-bit 2D
Power Type	:	Base Powered by 120Vac 60 Hz, 10W / 9Vdc 600mA Handset powered by 3.6 V / 600mAh
Power Cord	:	Non-shielded
Data Cable	:	RJ-11C x 1 => Non-shielded, 7' long, Plastic hoods, No bead
Applicant	:	Sony Corporation 6-7-35, Kitashinagawa Shinagawa Ku, Tokyo, Japan.

1.3 Description of Support Equipment

In order to construct the minimum testing, following equipment were used as the support units.

HP PC	:	Vectra VE 5/75 Series 2
Model No.	:	D4006A
Serial No.	:	SG61803151
Power Type	:	Switch
FCC ID	:	HCJVECTRAV25
Power cord	:	Non-shielded, 2.30m long, Plastic, No ferrite core

1.4 Configuration of System Under Test

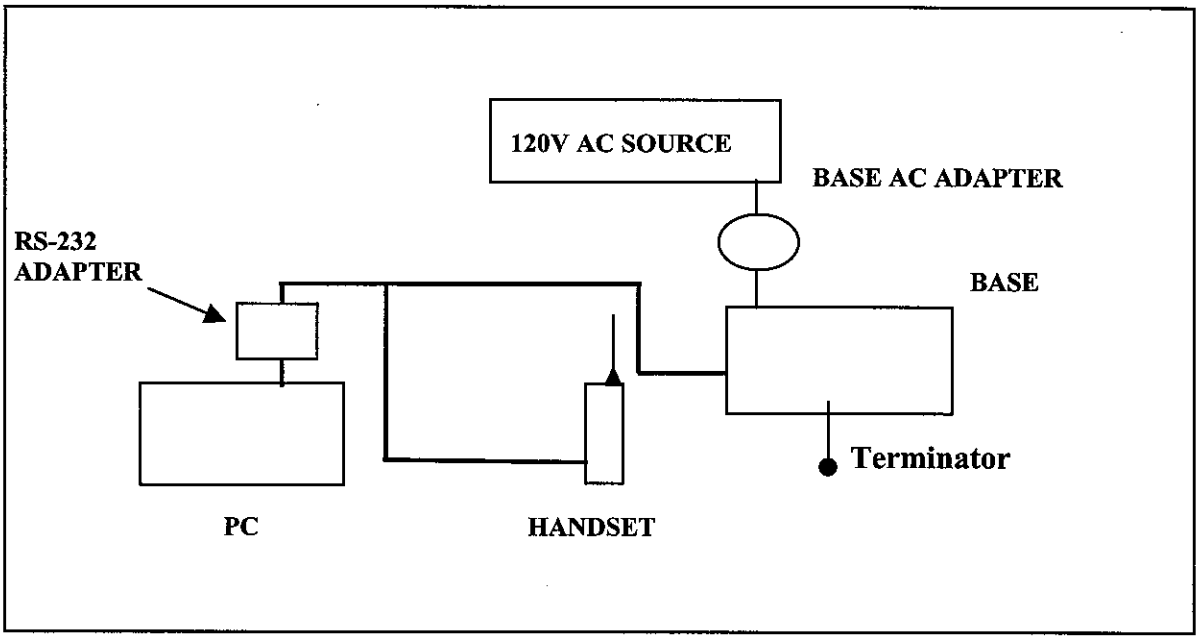

Fig. 1 Configuration of system under test

The tests below are run with the DCT transmitter set at high power in TDD mode .A serial port from a computer to the DCT .The EUT is needed to force selection of output power level and channel number.

The setting up procedure was recorded in Appendix A.

1.5 Verify the Frequency and Channel

1.5.1 Verify the Frequency Pairs

Channel	Base (GHz)	Handset (GHz)	Channel	Base (GHz)	Handset (GHz)
1	2.4048	2.4048	21	2.4408	2.4408
2	2.4066	2.4066	22	2.4426	2.4426
3	2.4088	2.4088	23	2.4444	2.4444
4	2.4102	2.4102	24	2.4462	2.4462
5	2.4120	2.4120	25	2.4480	2.4480
6	2.4138	2.4138	26	2.4498	2.4498
7	2.4156	2.4156	27	2.4516	2.4516
8	2.4174	2.4174	28	2.4534	2.4534
9	2.4192	2.4192	29	2.4552	2.4552
10	2.4210	2.4210	30	2.4570	2.4570
11	2.4228	2.4228	31	2.4588	2.4588
12	2.4246	2.4246	32	2.4606	2.4606
13	2.4264	2.4264	33	2.4624	2.4624
14	2.4282	2.4282	34	2.4642	2.4642
15	2.4300	2.4300	35	2.4660	2.4660
16	2.4318	2.4318	36	2.4678	2.4678
17	2.4336	2.4336	37	2.4696	2.4696
18	2.4354	2.4354	38	2.4714	2.4714
19	2.4372	2.4372	39	2.4372	2.4372
20	2.4390	2.4390	40	2.4750	2.4750

Note:

1. This is for sure that all frequencies are in 2.4048GHz to 2.4750GHz.
2. Section 15.31(m): Measurements on intentional radiators or receivers shall be performed at three frequencies for operating frequency range over 10 MHz. (The locations of these frequencies one near the top, one near the middle and one near the bottom.)
3. After test, the EUT operating frequencies are in 2.4048GHz to 2.4750GHz. So all the items as followed in testing report are need to test these three frequencies: top: channel 1, middle: channel 21, bottom: channel 40.

1.6 Test Procedure

All measurements contained in this report were performed mainly according to the techniques described in ANSI C63.4 (1992) and the pre-setup was written on Appendix A, the detail setup was written on each test item.

1.7 Location of the Test Site

The radiated emissions measurements required by the rules were performed on the **three-meter**, **Anechoic Chamber (Registration Number: 93906)** maintained by *Training Research Co., Ltd.* 1F., No. 2, Lane 194, Huan-Ho Street, Hsichih, Taipei Hsien 221, Taiwan, R.O.C. Complete description and measurement data have been placed on file with the commission. The conducted power line emissions tests and other test items were performed in a anechoic chamber also located at Training Research Co., Ltd.

No. 2, Lane 194, Huan-Ho Street, Hsichih, Taipei Hsien 221, Taiwan, R.O.C. *Training Research Co., Ltd.* is listed by the FCC as a facility available to do measurement work for others on a contract basis.

1.8 General Test Condition

The conditions under which the EUT operates were varied to determine their effect on the equipment's emission characteristics. The final configuration of the test system and the mode of operation used during these tests was chosen as that which produced the highest emission levels. However, only those conditions, which the EUT was considered likely to encounter in normal use were investigated.

In test, the base and handset are tested separately. They were set in high power and continuously transmitting mode that controlled by computer. The ch01, ch21 and ch40 of base and handset were all tested. The setting up procedure is recorded on Appendix A.

Ⅱ. Section 15.207: Power Line Conducted Emissions for AC Powered Units

2.1 Test Condition & Setup

The power line conducted emission measurements were performed in an anechoic chamber. The EUT was assembled on a wooden table, which is 80 centimeters high, was placed 40 centimeters from the backwall and at least 1 meter from the sidewall.

Power was fed to the EUT from the public utility power grid through a line filter and Line Impedance Stabilization Networks (LISNs). The LISN housing, measuring instrumentation case, ground plane, etc., were electrically bonded together at the same RF potential. The Spectrum analyzer (or EMI receiver) was connected to the AC line through an isolation transformer. The 50-ohm output of the LISN was connected to the spectrum analyzer directly. Conducted emission levels were in the CISPER quasi-peak detection mode. The analyzer's 6 dB bandwidth was set to 9 KHz. No post-detector video filter was used.

The spectrum was scanned from 450 KHz to 30 MHz. The physical arrangement of the test system and associated cabling was varied (within the scope of arrangements likely to be encountered in actual use) to determine the effect on the unit's emanations in amplitude and frequency. All spurious emission frequencies were observed. The highest emission amplitudes relative to the appropriate limit were measured and have been recorded in paragraph 2.4.

There are tree test condition apply in this test item, the test procedure description as the following :

1. Base station transmit only:
   Using the RS-232 port of PC and Rockwell software to control the base, handset.
   Then making access to the mode of continuous transmission. Three channels were tested, one in the top (CH01), one in the middle (CH21) and the other in bottom (CH40).
2. Idle state (handset park, on hook mode)

The setting up procedure is recorded on Appendix A.

2.2 List of Test Instruments

Instrument Name	Model No.	Brand	Serial No.	Last time	Next time
EMI Receiver	8546A	H P	3520A00242	10/18/00	10/18/01
RF Filter Section	85460A	H P	3448A00217	10/18/00	10/18/01
LISN (EUT)	LISN-01	TRC	9912-03,04	12/09/99	12/09/00
LISN (Support E.)	LISN-01	TRC	9912-05	01/04/00	01/04/01
Switch/Control Unit (< 30MHz)	3488A	HP	N/A	11/20/99	11/20/00
Auto Switch Box (< 30MHz)	ASB-01	TRC	9904-01	11/20/99	11/20/00

2.3 Test configuration

Conducted emissions test placement (idle only)

Conducted emissions test placement (operating only)

2.4 Test Result of Conducted Emissions

2.4.1 Base station transmit only

The following table shows a summary of the highest emissions of power line conducted emissions on the HOT and NATURAL conductors of the EUT power cord.

Model No. : SPP-A2470

EUT : Cordless Telephone with Answering System

Table 1 Power Line Conducted Emissions (Channel 1)

Power Connected Emissions			*FCC Class B*	
Conductor	*Frequency (KHz)*	*Peak Amplitude (dB µV)*	*Limit (dB µV)*	*Margin (dB)*
Line 1	483.00	20.46	48.00	-27.54
	2530.00	20.04	48.00	-27.96
	3970.00	24.64	48.00	-23.36
	24120.00	21.03	48.00	-26.97
	28160.00	21.36	48.00	-26.64
	28980.00	27.92	48.00	-20.08
	***			
LINE 2	553.00	20.15	48.00	-27.85
	586.00	20.22	48.00	-27.78
	972.00	20.62	48.00	-27.38
	1142.00	21.47	48.00	-26.53
	1635.00	20.40	48.00	-27.60
	2040.00	20.63	48.00	-27.37
	3970.00	23.68	48.00	-24.32
	24120.00	28.50	48.00	-19.50
	28160.00	20.38	48.00	-27.62
	28980.00	35.47	48.00	-12.53

NOTE:

1. Margin = Peak Amplitude - Limit
2. A "+" sign in the margin column means the emission is OVER the Class B Limit and "–" sign of means UNDER the Class B limit.

Table 2 Power Line Conducted Emissions (Channel 21)

Power Connected Emissions			*FCC Class B*	
Conductor	***Frequency (KHz)***	***Peak Amplitude (dB µV)***	***Limit (dB µV)***	***Margin (dB)***
Line 1	851.00	20.42	48.00	-27.58
	910.00	20.20	48.00	-27.80
	1974.00	21.44	48.00	-26.56
	2040.00	20.68	48.00	-27.32
	3970.00	23.27	48.00	-24.73
	24120.00	22.99	48.00	-25.01
	28980.00	27.29	48.00	-20.71
	***			
LINE 2	467.00	20.59	48.00	-27.41
	538.00	21.58	48.00	-26.42
	910.00	21.18	48.00	-26.82
	1070.00	21.86	48.00	-26.14
	2040.00	21.12	48.00	-26.88
	3970.00	23.82	48.00	-24.18
	24120.00	29.33	48.00	-18.67
	27430.00	20.30	48.00	-27.70
	28160.00	26.15	48.00	-21.85
	28980.00	36.86	48.00	-11.14

Table 3 Power Line Conducted Emissions (Channel 40)

Power Connected Emissions			*FCC Class B*	
Conductor	***Frequency (KHz)***	***Peak Amplitude (dB µV)***	***Limit (dB µV)***	***Margin (dB)***
Line 1	461.00	20.26	48.00	-27.74
	2040.00	20.75	48.00	-27.25
	3970.00	23.40	48.00	-24.60
	24120.00	23.01	48.00	-24.99
	28980.00	26.31	48.00	-21.69
	***			
LINE 2	470.00	20.64	48.00	-27.36
	534.00	20.42	48.00	-27.58
	803.00	20.41	48.00	-27.59
	1070.00	20.71	48.00	-27.29
	2040.00	21.24	48.00	-26.76
	2320.00	20.83	48.00	-27.17
	3970.00	24.65	48.00	-23.35
	24120.00	29.78	48.00	-18.22
	28160.00	27.57	48.00	-20.43
	28980.00	37.10	48.00	-10.90

Table 4 Power Line Conducted Emissions (Charging)

Power Connected Emissions			*FCC Class B*	
Conductor	***Frequency (KHz)***	***Peak Amplitude (dB μV)***	***Limit (dB μV)***	***Margin (dB)***
Line 1	470.00	20.85	48.00	-27.15
	749.00	20.40	48.00	-27.60
	1003.00	20.58	48.00	-27.42
	1545.00	20.60	48.00	-27.40
	2030.00	20.91	48.00	-27.09
	2260.00	20.35	48.00	-27.65
	2660.00	20.97	48.00	-27.03
	3970.00	23.88	48.00	-24.12
	15930.00	21.00	48.00	-27.00
	28980.00	22.08	48.00	-25.92
LINE 2	524.00	20.39	48.00	-27.61
	658.00	20.03	48.00	-27.97
	680.00	20.57	48.00	-27.43
	2040.00	21.08	48.00	-26.92
	3970.00	24.69	48.00	-23.31
	15930.00	25.36	48.00	-22.64
	24120.00	26.06	48.00	-21.94
	26050.00	21.32	48.00	-26.68
	28160.00	27.45	48.00	-20.55
	28980.00	32.03	48.00	-15.97

Table 5 Power Line Conducted Emissions (Linking)

Power Connected Emissions			*FCC Class B*	
Conductor	***Frequency (KHz)***	***Peak Amplitude (dB μV)***	***Limit (dB μV)***	***Margin (dB)***
Line 1	534.00	20.63	48.00	-27.37
	803.00	22.08	48.00	-25.92
	966.00	20.20	48.00	-27.80
	1015.00	20.32	48.00	-27.68
	2040.00	21.12	48.00	-26.88
	3970.00	21.67	48.00	-26.33
	6340.00	20.39	48.00	-27.61
	7030.00	20.21	48.00	-27.79
	15930.00	22.52	48.00	-25.48
	28980.00	28.44	48.00	-19.56
LINE 2	538.00	20.32	48.00	-27.68
	593.00	20.30	48.00	-27.70
	935.00	20.59	48.00	-27.41
	966.00	20.59	48.00	-27.41
	2000.00	20.41	48.00	-27.59
	3970.00	22.84	48.00	-25.16
	15930.00	25.91	48.00	-22.09
	24120.00	29.87	48.00	-18.13
	28160.00	27.27	48.00	-20.73
	28980.00	36.14	48.00	-11.86

Ⅲ. Section 15.247(a)(2): Bandwidth for Direct Sequence System.

3.1 Test Condition & Setup

The transmitter bandwidth measurements were performed in an anechoic chamber. The EUT was placed on a wooded table, which is 0.8 meters height. The EUT was set to transmit continuously. Various channels were also investigated to find the maximum occupied bandwidth. The minimum 6 dB bandwidth shall be at least 500 KHz.

Make the measurement with the spectrum analyzer's resolution bandwidth (RBW) = 100 KHz. Set the span>> RBW. The detector function was set to peak and hold mode to clearly observe the components.

Setting up procedure is written on Appendix A.

3.2 Test Instruments Configuration

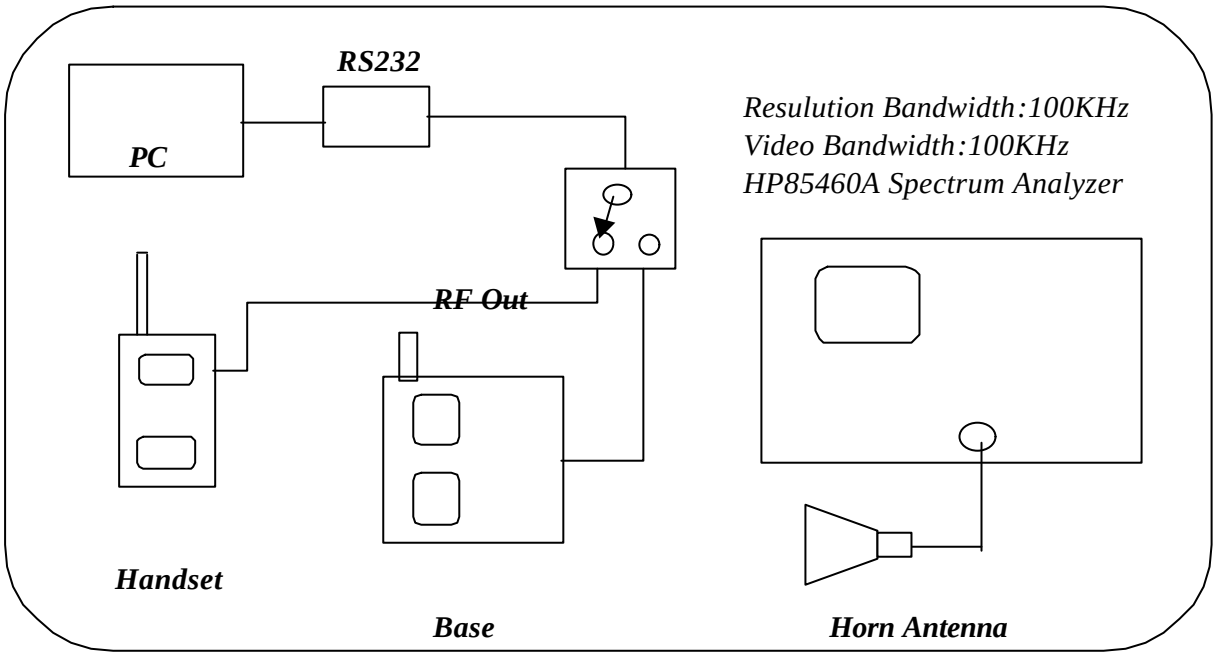

P.S.A serial port from notebook computer to control the EUT at maximal power output and channel Number.

Fig 10. Test Configuration of bandwidth for direct sequence system

3.3 List of Test Instruments

Instrument Name	Model No.	Brand	Serial No.	Last time	Next time
EMI Receiver	8546A	H P	3520A00242	10/18/00	10/18/01
RF Filter Section	85460A	H P	3448A00217	10/18/00	10/18/01
Horn Antenna	3115	EMCO	9704 – 5178	08/15/00	08/15/01

3.4 Test Result of Bandwidth

Bandwidth of Channel 1

Bandwidth of Base	: 1.63 MHz
Bandwidth of Handset	: 1.60 MHz
The min. 6 dB BW at least	: 500 KHz

Bandwidth of Channel 21

Bandwidth of Base	: 1.63 MHz
Bandwidth of Handset	: 1.63 MHz
The min. 6 dB BW at least	: 500 KHz

Bandwidth of Channel 40

Bandwidth of Base	: 1.60 MHz
Bandwidth of Handset	: 1.58 MHz
The min. 6 dB BW at least	: 500 KHz

Note:

1. The data in the above table are summarizing the following attachment spectrum analyzer hard copy.
2. The attachments follow page.

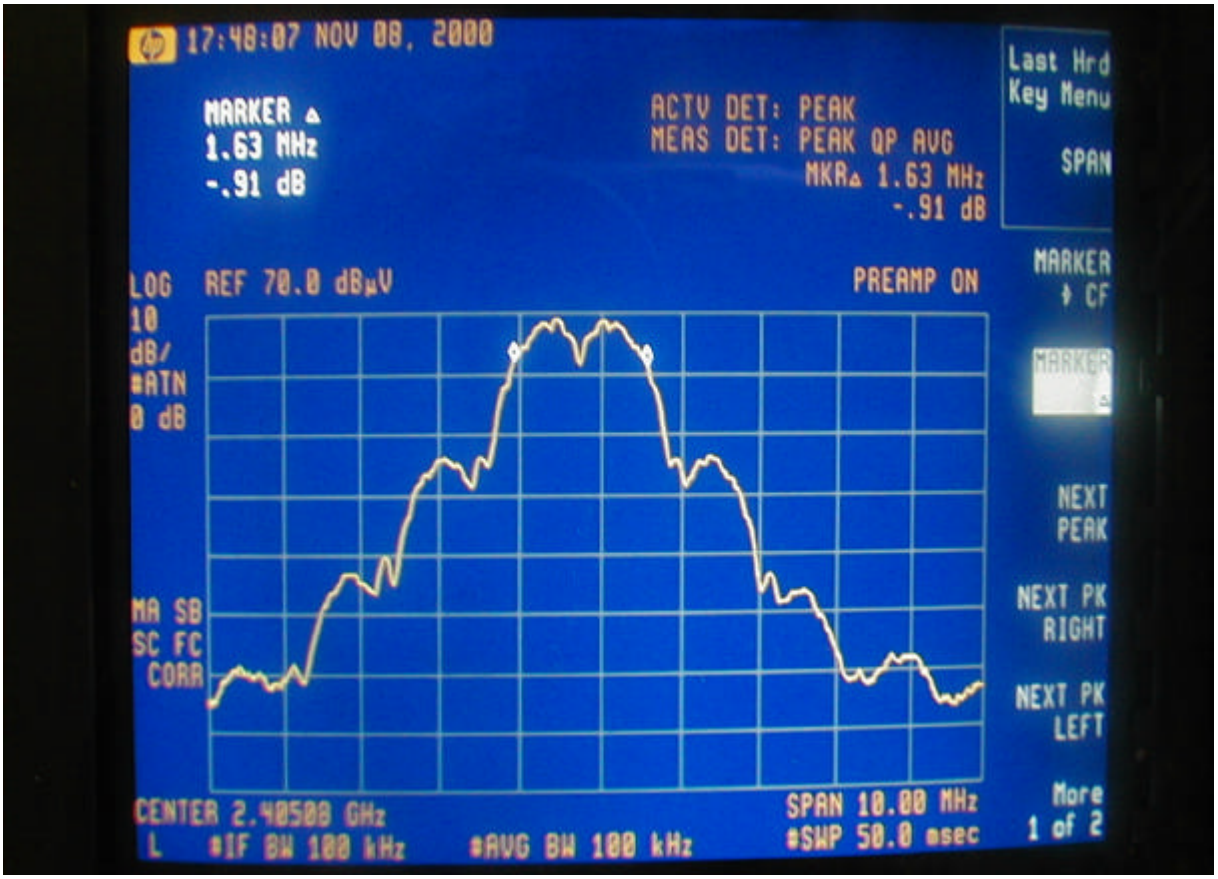
17:48:07 NOV 08, 2000
MARKER Δ
1.63 MHz
-.91 dB
ACTV DET: PEAK
MEAS DET: PEAK QP AVG
MKRΔ 1.63 MHz
-.91 dB
Last Hrd Key Menu
SPAN
LOG 10 dB/
#ATN 0 dB
REF 70.0 dBμV
PREAMP ON
MARKER → CF
MARKER
NEXT PEAK
NEXT PK RIGHT
NEXT PK LEFT
MA SB
SC FC
CORR
CENTER 2.40500 GHz
L #IF BW 100 kHz
#AVG BW 100 kHz
SPAN 10.00 MHz
#SWP 50.0 msec
More 1 of 2

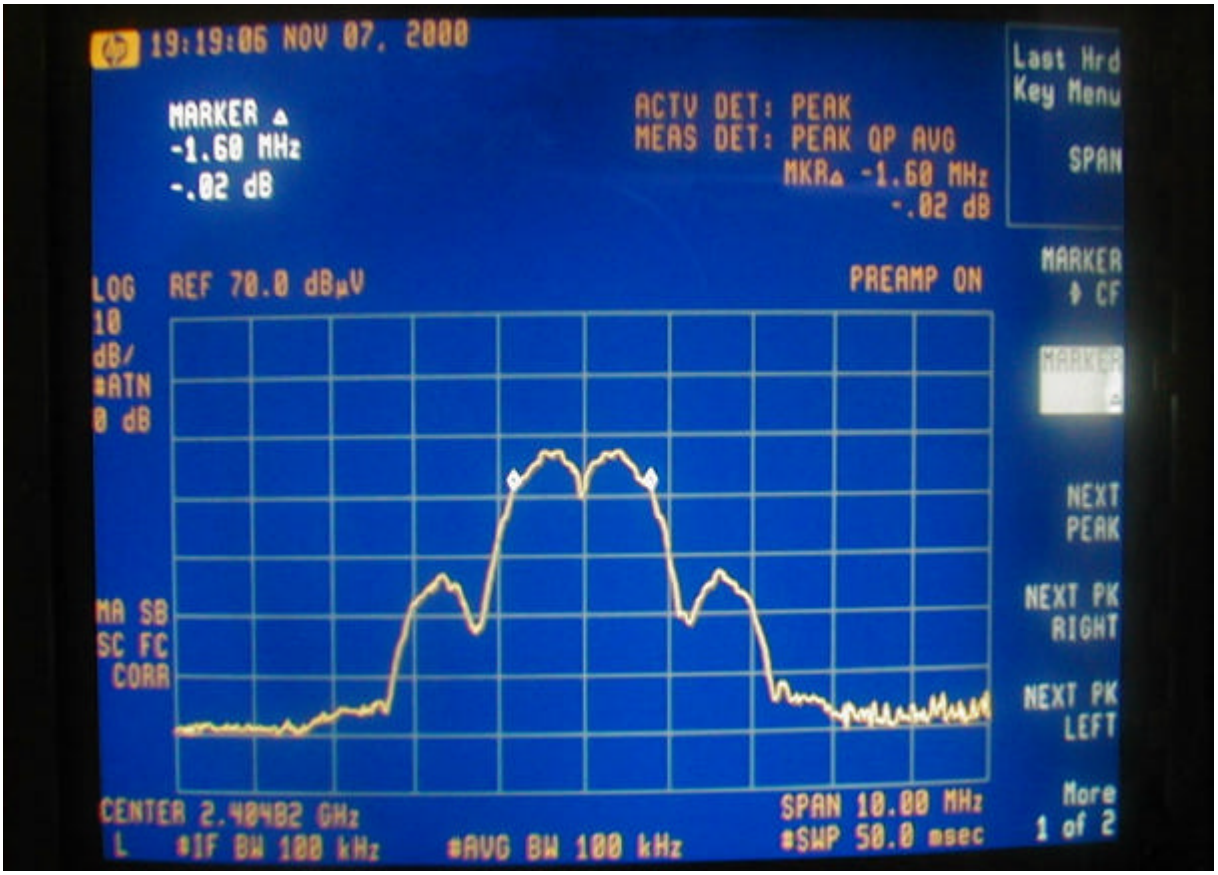
19:19:06 NOV 07, 2000
MARKER Δ
-1.60 MHz
-.02 dB
ACTV DET: PEAK
MEAS DET: PEAK QP AVG
MKRΔ -1.60 MHz
-.02 dB
Last Hrd Key Menu
SPAN
LOG 10 dB/
#ATN 0 dB
REF 70.0 dBμV
PREAMP ON
MARKER → CF
MARKER
NEXT PEAK
NEXT PK RIGHT
NEXT PK LEFT
MA SB
SC FC
CORR
CENTER 2.40482 GHz
L #IF BW 100 kHz
#AVG BW 100 kHz
SPAN 10.00 MHz
#SWP 50.0 msec
More 1 of 2

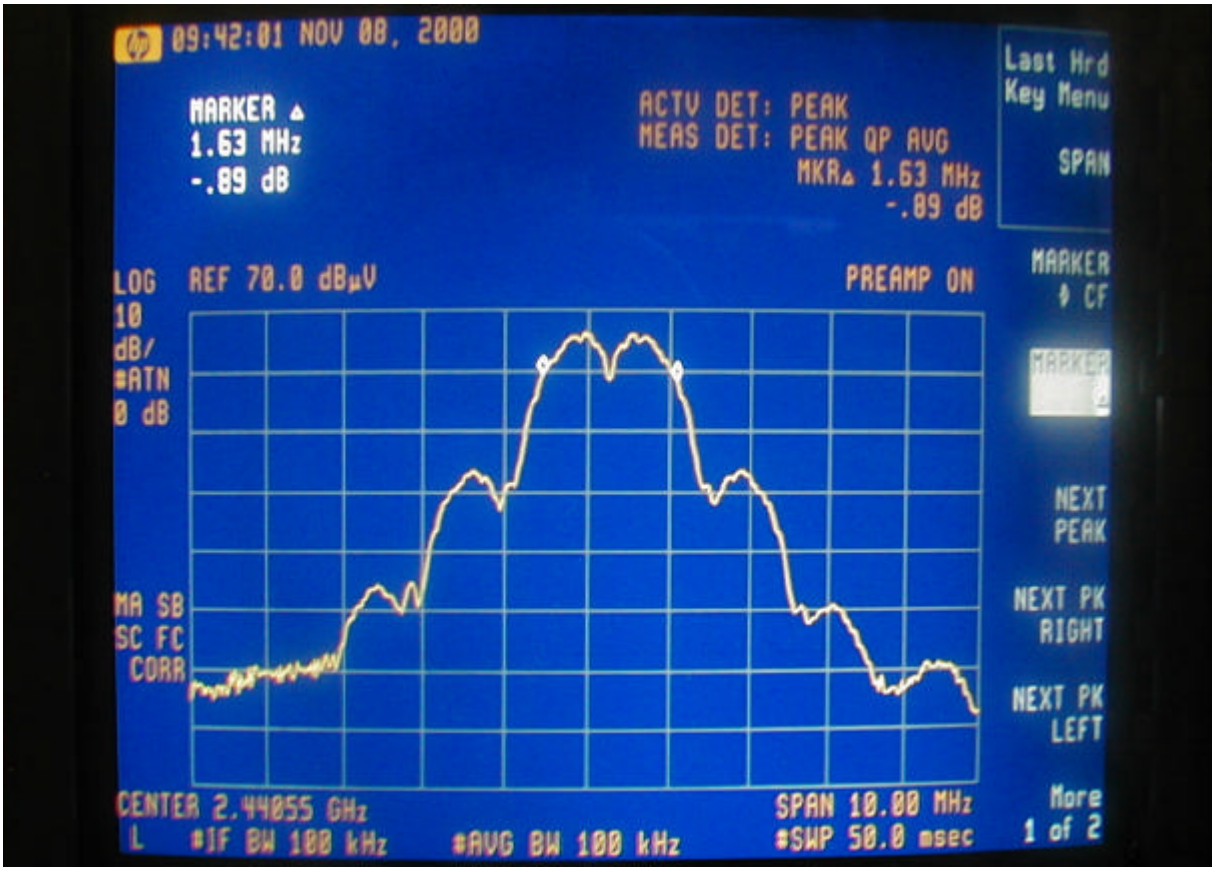
09:42:01 NOV 08, 2000
MARKER ▲
1.63 MHz
-.89 dB
ACTV DET: PEAK
MEAS DET: PEAK QP AVG
MKR▲ 1.63 MHz
-.89 dB
Last Hrd Key Menu
SPAN
LOG 10 dB/
REF 70.0 dBµV
PREAMP ON
MARKER → CF
#ATN 0 dB
NEXT PEAK
MA SB SC FC CORR
NEXT PK RIGHT
NEXT PK LEFT
CENTER 2.44055 GHz
SPAN 10.00 MHz
More 1 of 2
L #IF BW 100 kHz
#AVG BW 100 kHz
#SWP 50.0 msec

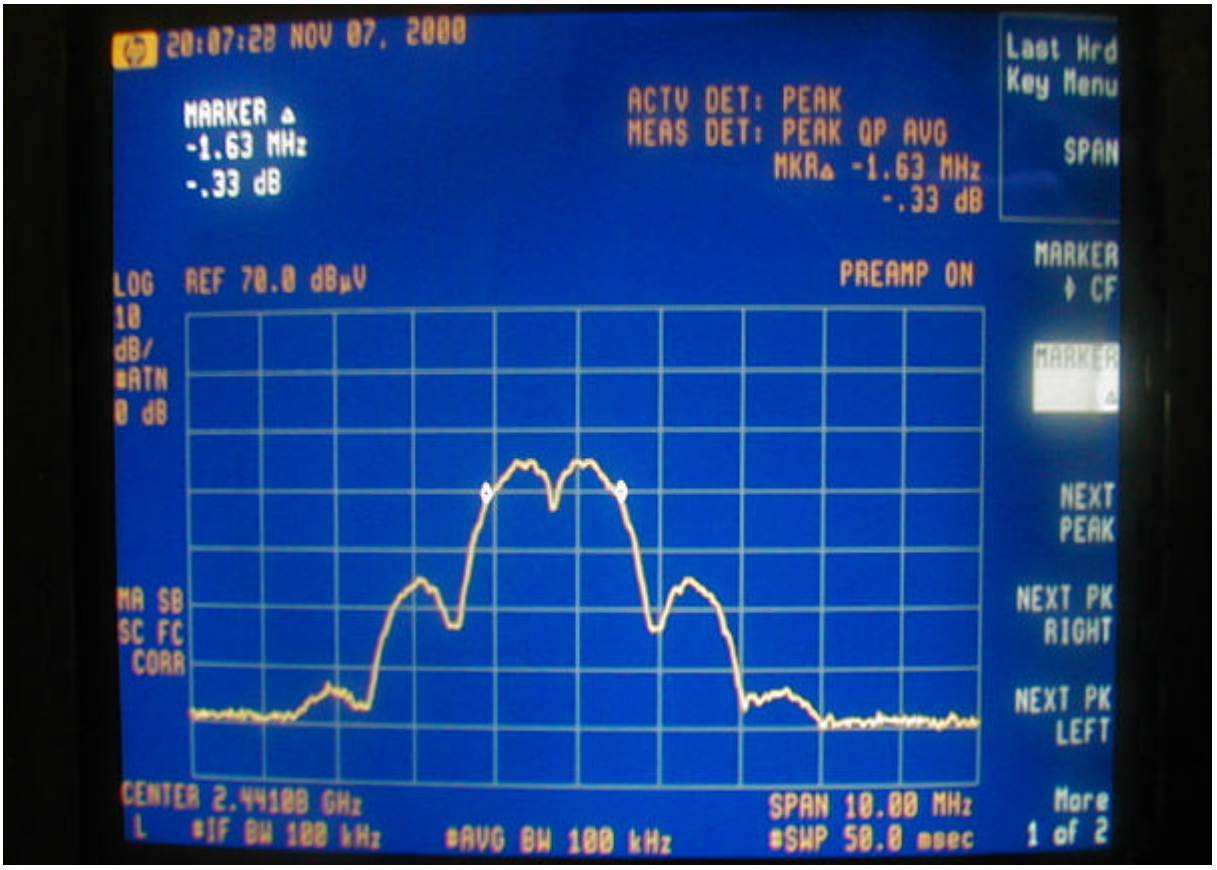
20:07:28 NOV 07, 2000
MARKER ▲
-1.63 MHz
-.33 dB
ACTV DET: PEAK
MEAS DET: PEAK QP AVG
MKR▲ -1.63 MHz
-.33 dB
Last Hrd Key Menu
SPAN
LOG 10 dB/
REF 70.0 dBµV
PREAMP ON
MARKER → CF
#ATN 0 dB
NEXT PEAK
MA SB SC FC CORR
NEXT PK RIGHT
NEXT PK LEFT
CENTER 2.44100 GHz
SPAN 10.00 MHz
More 1 of 2
L #IF BW 100 kHz
#AVG BW 100 kHz
#SWP 50.0 msec

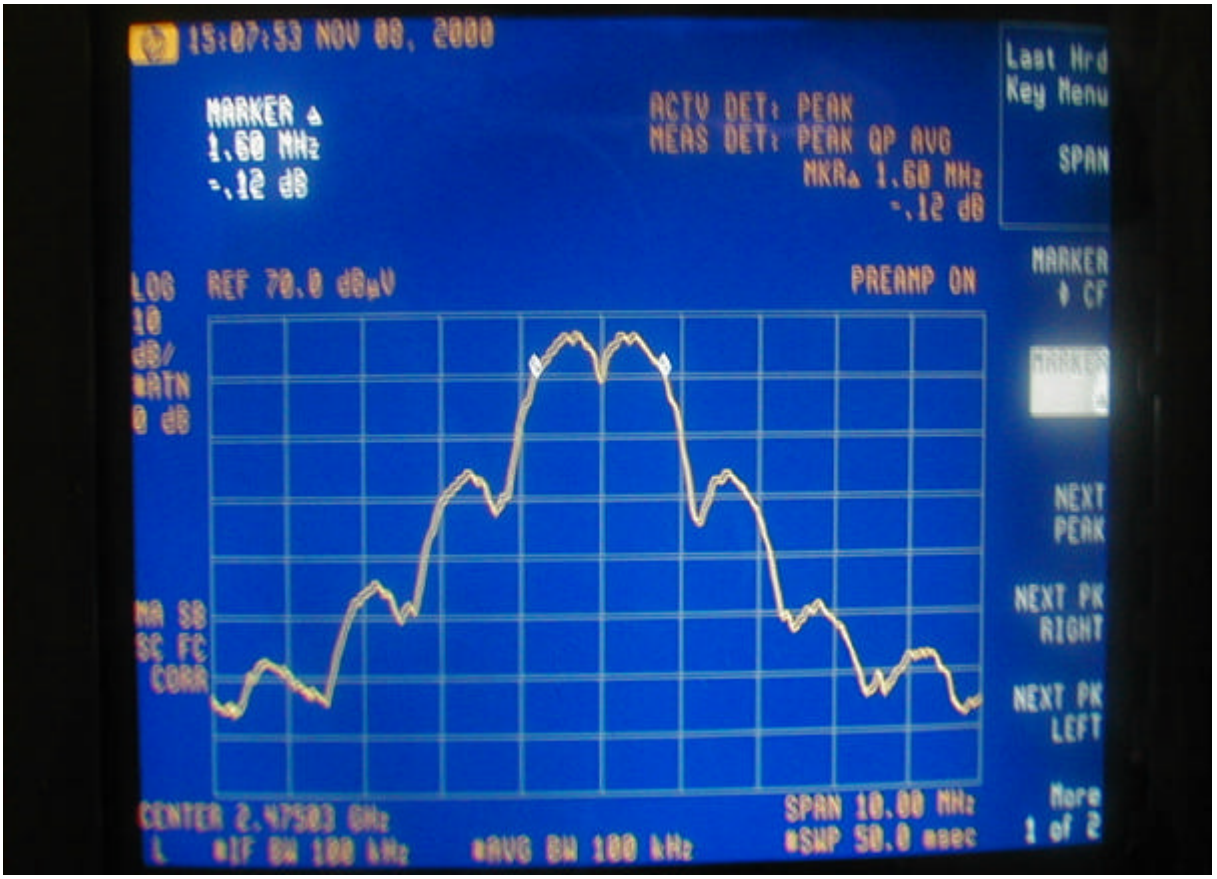
15:07:53 NOV 08, 2000
MARKER Δ
1.60 MHz
-.12 dB
ACTV DET: PEAK
MEAS DET: PEAK QP AVG
MKRΔ 1.60 MHz
-.12 dB
Last Hrd Key Menu
SPAN
LOG REF 70.0 dBμV
PREAMP ON
10 dB/
#ATN 0 dB
MARKER ↑ CF
NEXT PEAK
NEXT PK RIGHT
NEXT PK LEFT
MA SB
SC FC
CORR
More 1 of 2
CENTER 2.47503 GHz
SPAN 10.00 MHz
L #IF BW 100 kHz #AVG BW 100 kHz
#SWP 50.0 msec

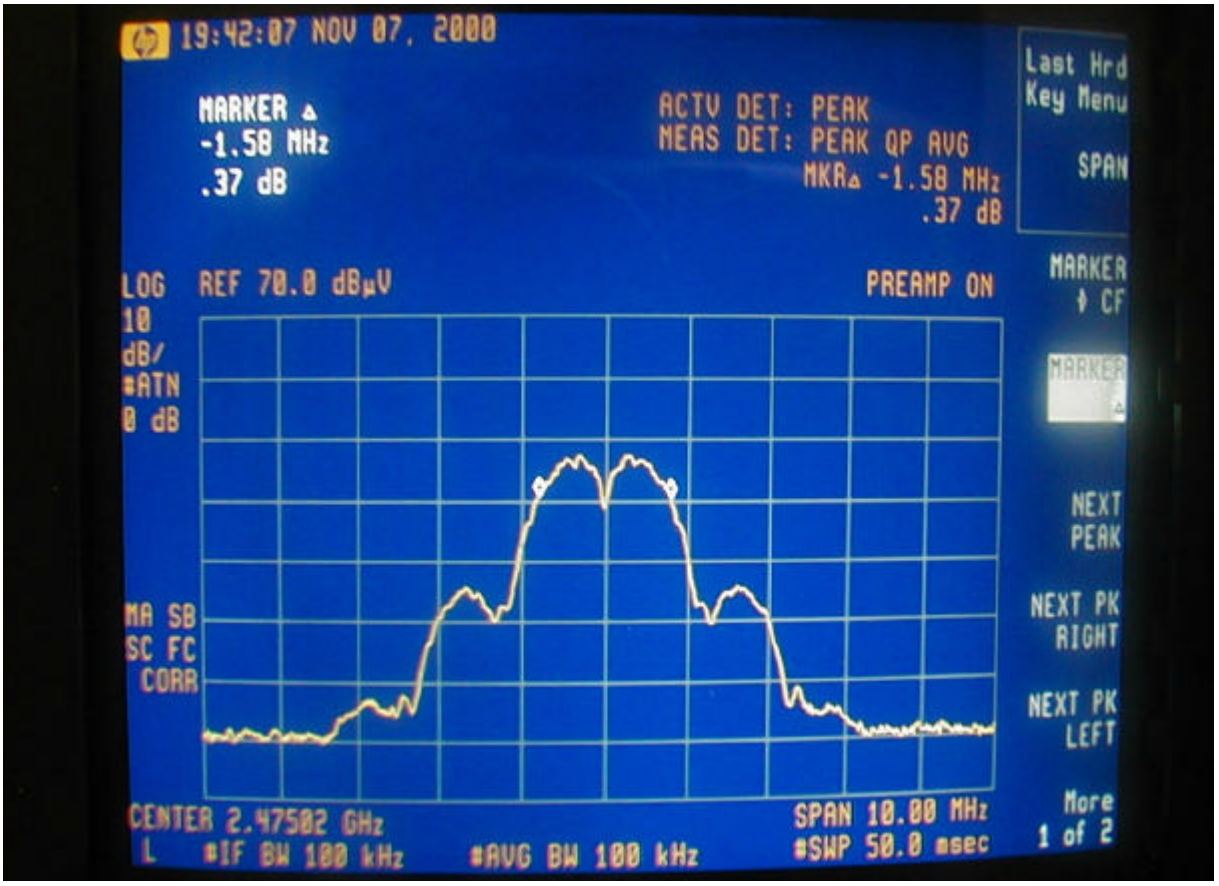
19:42:07 NOV 07, 2000
MARKER Δ
-1.58 MHz
.37 dB
ACTV DET: PEAK
MEAS DET: PEAK QP AVG
MKRΔ -1.58 MHz
.37 dB
Last Hrd Key Menu
SPAN
LOG REF 70.0 dBμV
PREAMP ON
10 dB/
#ATN 0 dB
MARKER ↑ CF
NEXT PEAK
NEXT PK RIGHT
NEXT PK LEFT
MA SB
SC FC
CORR
More 1 of 2
CENTER 2.47502 GHz
SPAN 10.00 MHz
L #IF BW 100 kHz #AVG BW 100 kHz
#SWP 50.0 msec

Ⅳ. Section 15.247(B) : Power Output

4.1 Test Condition & Setup

The EUT was placed in a anechoic chamber and scanned at 3 meter distance to determine its emission characteristics. The physical arrangement of the EUT was varied (within the scope of arrangements likely to be encountered in actual use) to determine the effect on the unit's emanations in amplitude, directivity, and frequency. The exact system configuration that produced the highest emissions was noted so it could be reproduced later during the final tests. This was done to ensure that the final measurements would demonstrate the worst-case interference potential of the EUT. Final radiation measurements were made on a three-meter, anechoic chamber. The EUT system was placed on a nonconductive turntable, which is 0.8 meters height, top surface 1.0 x 1.5 meter.

The spectrum was examined from 1GHz to 40GHz using a Hewlett Packard Spectrum Analyzer 8564E, EMCO whole range Horn antenna (Model No.: 3115) is used to measure frequency from 1GHz to 18GHz. The final test is used the spectrum HP 8564E. At each frequency, the EUT was rotated 360 degrees, and the antenna was raised and lowered from one to four meters to find the maximum emission levels. Measurements were taken using both horizontal and vertical antenna polarization.

Appropriate preamplifiers were used for improving sensitivity and precautions were taken to avoid overloading or desensitizing the spectrum analyzer. The spectrum analyzer HP8564E used on this testing for frequency 1GHz to 18GHz. No post-detector video filters were used in the test. Set the RB= 3 MHz, VB = 3MHz and the span = 5 MHz. The analyzer was operated in the maximum hold mode.

There are two test condition apply in this test item, the test procedure description as the following:

(1) Base and handset station transmit only:

Using the RS-232 port of PC and Rockwell software to control the base, handset. Then making access to the mode of continuous transmission. Three channels were tested, one in the top (CH01), one in the middle (CH21) and the other in bottom (CH40).

With the transmitter operating from a fully charged battery and using the internal antenna, Radiates spurious emissions falling within the restricted bands of 15.209 were measured at operating frequencies corresponding to low, mid and high channels in the 2400-2483.5 MHz band.

The actual field intensity in decibels referenced to 1 microvolt per meter (dBμV/m) is determined by algebraically adding the measured reading in dBμV, the antenna factor (dB), and cable loss (dB) at the appropriate frequency.

4.2 List of Test Instruments

Instrument Name	Model No.	Brand	Serial No.	Last time	Next time
Spectrum Analyzer	8564E	H P	US36433002	08/13/00	08/13/01
Microwave Preamplifier	83051A	H P	3232A00347	08/13/00	08/13/01
Horn Antenna	3115	EMCO	9704 – 5178	08/15/00	08/15/01

4.3 Test Result of Fundamental Emissions

The peak values of fundamental emissions from the EUT at various antenna heights, antenna polarization, EUT orientation, etc. are recorded on the following.

Model No. : SPP-A2470

EUT : Cordless Telephone with Answering System

Table 6 Open Field Fundamental Emissions

Channel	*Frequency (GHz)*	*A.P. (H/V)*	*A.H. (M)*	*Table (degree)*	*Amplitude (dBmV/m)*	*CF (dB)*	*Corrected Amplitude (dBmV/m)*	*E.R.P. (Peak)*	
								m W	*dB m*
Base 01	2.4048	H	1.00	33	108.51	-8.67	99.84	2.891	4.611
	2.4048	V	1.00	165	121.47	-8.67	112.80	57.164	17.571
Base 21	2.4408	H	2.43	189	107.90	-8.67	99.23	2.513	4.001
	2.4408	V	1.00	224	119.26	-8.67	110.59	34.365	15.361
Base 40	2.4750	H	1.00	62	106.89	-8.67	98.22	1.991	2.991
	2.4750	V	1.00	179	119.59	-8.67	110.92	37.078	15.691
Handset 01	2.4048	H	3.94	291	96.41	-8.67	87.74	0.178	-7.489
	2.4048	V	1.00	330	99.61	-8.67	90.94	0.372	-4.289
Handset 21	2.4408	H	3.93	15	97.18	-8.67	88.51	0.213	-6.719
	2.4408	V	1.00	90	99.91	-8.67	91.24	0.399	-3.989
Handset 40	2.4750	H	3.92	167	95.22	-8.67	86.55	0.136	-8.679
	2.4750	V	1.00	209	87.95	-8.67	79.28	0.025	-15.949

Note:

1. A.P. means antenna polarization, horizontal and vertical.
2. A.H. means antenna height.
3. Table means turntable turning position.
4. Corrected Factor (C. F.) = Cable Loss + Antenna Factor – Amplified Gain
   Corrected Amplitude = Peak Amplitude + Corrected Factor
5. Amplitude means the fundamental emission measured.
6. Effective Radiation Power (E.R.P.) = $(E\ d)^2 / 30G$

E is the measured maximum field strength in V/m utilizing the maximum hold mode RBW (3MHz)
G is the numeric gain of the transmitting antenna over an isotropic radiator (1.00)
d is the distance in meters from which the field strength was measured (3M)

Example: the Max Radiation Emission of base ch01 = 99.84 dBμV/m

$10^{(99.84/20)} \times 10^{-6} = 0.098175$ V

E.R.P. = $(0.098175 \times 3)^2 / 30 = 2.89149$ mW = 10 x log (2.89149 mW / 1 mW) = 4.611 dBm

Ⅴ. Section 15.247 (C)(2): Spurious Emissions (Radiated)

5.1 Test Condition & Setup

The EUT was placed in an anechoic chamber and scanned at 3 meter distance to determine its emission characteristics. The physical arrangement of the EUT was varied (within the scope of arrangements likely to be encountered in actual use) to determine the effect on the unit's emanations in amplitude, directivity, and frequency. The exact system configuration which produced the highest emissions was noted so it could be reproduced later during the final tests. This was done to ensure that the final measurements would demonstrate the worst-case interference potential of the EUT.

Final radiation measurements were made on a three-meter, anechoic chamber. The EUT system was placed on a nonconductive turntable which is 0.8 meters height, top surface 1.0 x 1.5 meter.

The spectrum was examined from 30 MHz to 1000 MHz using an Hewlett Packard 85460A EMI Receiver, Schaffner whole range Bi-Log antenna (Model No.: CBL6141A) is used to measure frequency from 30 MHz to 1GHz.The final test is used the spectrum HP 85460A and spectrum was examined from 1 GHz to 18GHz using an Hewlett Packard 8564E Spectrum Analyzer, EMCO Horn Antenna (Model 3115) for 1 G ~ 18 GHz.

At each frequency, the EUT was rotated 360 degrees, and the antenna was raised and lowered from one to four meters to find the maximum emission levels. Measurements were taken using both horizontal and vertical antenna polarization.

Appropriate preamplifiers were used for improving sensitivity and precautions were taken to avoid overloading or desensitizing the spectrum analyzer. There are two spectrum analyzers use on this testing, HP 85460A for frequency 30MHz to 1000MHz, and 8564E for frequency 1 GHz to 18 GHz. No post-detector video filters were used in the test. The spectrum analyzer's 6 dB bandwidth was set to 120 KHz (spectrum was examined from 30 MHz to 1000 MHz), the spectrum analyzer's 6 dB bandwidth was set to 1 MHz (spectrum was examined from 1 GHz to 18GHz) and the analyzer was operated in the maximum hold mode.

There are two test condition apply in this test item, the test procedure description as the following:

(1) Base and handset station transmit only:

Using the RS-232 port of PC and Rockwell software to control the base, handset. Then making access to the mode of continuous transmission. Three channels is tested, one in the top (CH01), one in the middle (CH21) and the other in bottom (CH40).

With the transmitter operating from a fully charged battery and using the internal antenna, radiates spurious emissions falling within the restricted bands of 15.209 were measured at operating frequencies corresponding to low, mid and high channels in the 2400 ~ 2483.5 MHz band.

The actual field intensity in decibels referenced to 1 microvolt per meter (dBμV/m) is determined by algebraically adding the measured reading in dBμV, the antenna factor (dB), and cable loss (dB) at the appropriate frequency.

For frequency between 30MHz to 1000MHz

FIa (dBuV/m) = FIr (dBμV) – Correction Factors

FIa : Actual Field Intensity

FIr : Reading of the Field Intensity

Correction Factors = Antenna Factor + Cable Loss – Amplifier Gain

For frequency between 1 GHz to 18 GHz

FIa (dBμV/m) = FIr (dBμV) + Correction Factor + Duty Cycle

FIa : Actual Field Intensity

FIr : Reading of the Field Intensity

Correction Factors = Antenna Factor + Cable Loss – Amplifier Gain

The setting up procedure is recorded on Appendix A.

5.2 List of Test Instruments

Instrument Name	Model No	Brand	Serial No.	Last time	Next time
EMI Receiver	8546A	H P	3520A00242	10/18/00	10/18/01
RF Filter Section	85460A	H P	3448A00217	10/18/00	10/18/01
Switch/Control Unit (> 30MHz)	3488A	H P	N/A	11/20/99	11/20/00
Auto Switch Box (> 30MHz)	ASB-01	TRC	9904-01	11/20/99	11/20/00
Spectrum Analyzer	8564E	H P	US36433002	08/13/00	08/13/01
Microwave Preamplifier	83051A	H P	3232A00347	08/13/00	08/13/01
Horn Antenna	3115	EMCO	9704 – 5178	08/15/00	08/15/01

5.2.1 Duty Cycle Factor Measurement

The duty cycle factor measurement is performed in a shield enclosure. The test condition and setup is as same as paragraph Ⅲ. Set the RB = 1MHz, VB=1MHz, and span = 0 MHz. Link the base and handset, then get the Time of duty and cycle as follow page.

The duty cycle factor = 20 log (T_{duty} / T_{cycle}) = 20 log (0.950/2.000) = – 6.466

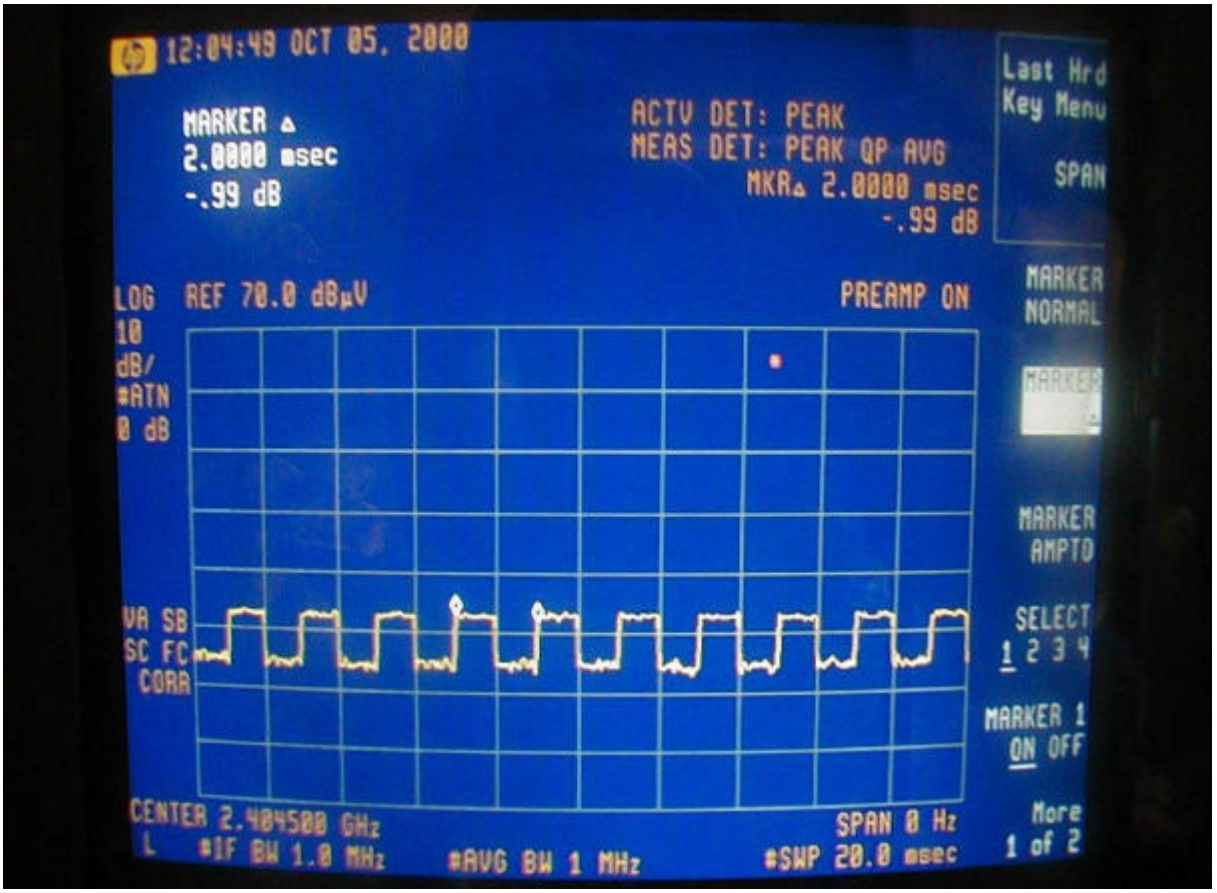
12:04:49 OCT 05, 2000
MARKER Δ
2.0000 msec
-.99 dB
ACTV DET: PEAK
MEAS DET: PEAK QP AVG
MKRΔ 2.0000 msec
-.99 dB
Last Hrd Key Menu
SPAN
LOG 10 dB/
REF 70.0 dBμV
PREAMP ON
MARKER NORMAL
#ATN 0 dB
MARKER AMPTD
VA SB
SC FC
CORR
SELECT 1 2 3 4
MARKER 1 ON OFF
CENTER 2.404500 GHz
L #IF BW 1.0 MHz
#AVG BW 1 MHz
SPAN 0 Hz
#SWP 20.0 msec
More 1 of 2

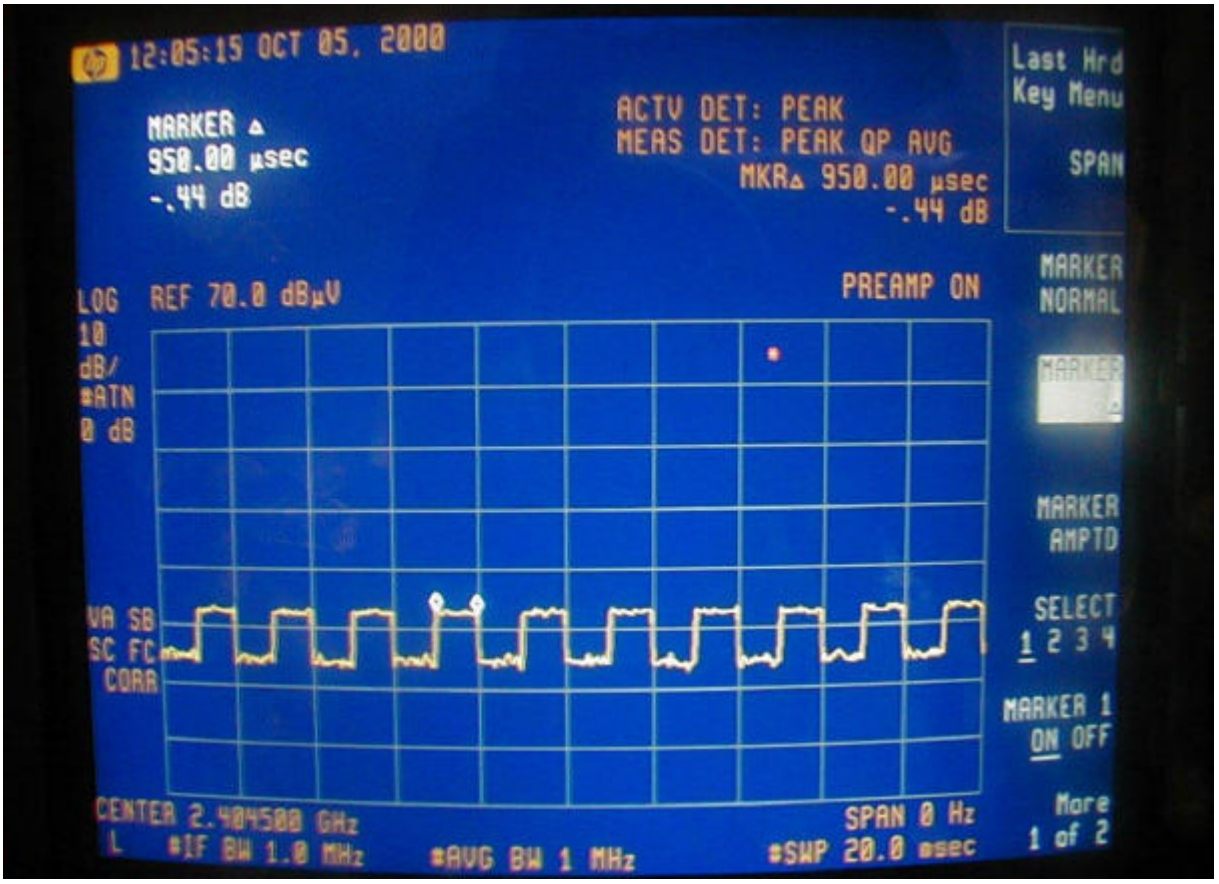
12:05:15 OCT 05, 2000
MARKER Δ
950.00 μsec
-.44 dB
ACTV DET: PEAK
MEAS DET: PEAK QP AVG
MKRΔ 950.00 μsec
-.44 dB
Last Hrd Key Menu
SPAN
LOG 10 dB/
REF 70.0 dBμV
PREAMP ON
MARKER NORMAL
#ATN 0 dB
MARKER AMPTD
VA SB
SC FC
CORR
SELECT 1 2 3 4
MARKER 1 ON OFF
CENTER 2.404500 GHz
L #IF BW 1.0 MHz
#AVG BW 1 MHz
SPAN 0 Hz
#SWP 20.0 msec
More 1 of 2

5.3 Test Instruments Configuration

Pig 1 Front View of the Test Configuration (BASE)

Pig 2 Rear View of the Test Configuration (BASE)

Pig 1 Front View of the Test Configuration (HANDSET)

Pig 2 Rear View of the Test Configuration (HANDSET)

The test configuration for frequency between 1 GHz to 18 GHz is same as above.

5.4 Test Result of Second Harmonic

Set the spectrum RB= 3 MHz, VB = 3MHz and span = 5MHz. The correction factors of the second harmonic is the second harmonic must lower 20 dB than the fundamental.

Model No. : SPP-A2470

EUT : Cordless Telephone with Answering System

Table 7 Second Harmonic Attendation

Channel	*Fundamental (MHz)*	*Fundamental (dBmV/m)*	*2nd Harmonic (GHz)*	*2nd Harmonic (dBmV/m)*	*Result (F/H dB)*	*Limit (dB)*	*Margin (dB)*
B/S CH 01	2.4048	112.80	4.807	52.79	60.01	20.00	40.01
B/S CH 10	2.4408	110.59	4.883	52.60	57.99	20.00	37.99
B/S CH 20	2.4750	110.92	4.948	51.33	59.59	20.00	39.59
H/S CH 01	2.4048	90.94	4.807	52.33	38.61	20.00	18.61
H/S CH 10	2.4408	91.24	4.883	51.67	39.57	20.00	19.57
H/S CH 20	2.4750	86.55	4.948	50.67	35.88	20.00	15.88

Note:

1. The 2nd Harmonic is comply with 15.209.
2. Result = Fundamental – 2nd Harmonic must over 20 dB and comply with 15.209.