EXHIBIT B

Test Report

5.5 Test Result of Spurious Radiated Emissions

5.5.1 Base and handset station transmit only

The highest peak values of radiated emissions form the EUT at various antenna heights, antenna polarizations, EUT orientation, etc. are recorded on the following.

Model No. : SPP-A2470
EUT : Cordless Telephone with Answering System

Test Conditions: Testing room : Temperature : 26 ° C Humidity : 73 % RH
Testing site : Temperature : 31 ° C Humidity : 75 % RH

Table 8 Open Field Radiated Emissions For 30MHz 1GHz [Channel 1, Base Horizontal]

Radiated Emission				*Correction Factors*	*Corrected Amplitude*	*FCC Class B (3 m)*	
Frequency (MHz)	*Amplitude (dBmV/m)*	*Ant. H. (m)*	*Table (°)*	*(dB)*	*(dBmV/m)*	*Limit (dBmV/m)*	*Margin (dB)*
131.071	23.88	2.44	128	-14.62	38.50	43.50	-5.00
211.205	24.88	1.00	121	-14.19	39.07	43.50	-4.43
220.805	26.68	1.00	128	-15.46	42.14	46.00	-3.86
262.142	25.43	1.00	1	-15.72	41.15	46.00	-4.85
364.805	23.52	1.00	91	-18.36	41.88	46.00	-4.12
624.009	19.21	1.00	141	-23.23	42.44	46.00	-3.56
***							

Note:

1. Margin = Corrected Amplitude – Limit.
2. Peak Amplitude – Correction Factors = Corrected Amplitude

Table 9 Open Field Radiated Emissions For 1GHz 18GHz [Channel 1, Base Horizontal]

Radiated Emission				Correction Factors	Duty Cycle	Corrected Amplitude	FCC Class B (3 m)	
Frequency (GHz)	Amplitude (dBm V/m)	Ant. H. (m)	Table (°)	(dB)	(dB)	(dBm V/m)	Limit (dBm V/m)	Margin (dB)
7.214	36.07	1.00	69	9.72	-6.46	39.33	54.00	-14.67
9.621	20.61	1.00	71	9.72	-6.46	23.87	54.00	-30.13
***								

Note:

1. Margin = Corrected - Limit.
2. Peak Amplitude + Correction Factor + Duty Cycle = Corrected

Table 10 Open Field Radiated Emissions For 30MHz 1GHz [Channel 1, Base Vertical]

Radiated Emission				Correction Factors	Corrected Amplitude	FCC Class B (3 m)	
Frequency (MHz)	Amplitude (dBmV/m)	Ant. H. (m)	Table (°)	(dB)	(dBmV/m)	Limit (dBmV/m)	Margin (dB)
48.003	17.54	1.00	23	-15.73	33.27	40.00	-6.73
65.537	26.87	1.00	36	-10.10	36.97	40.00	-3.03
201.604	20.79	2.48	58	-13.74	34.53	43.50	-8.97
643.208	17.03	1.00	27	-24.01	41.04	46.00	-4.96
662.409	17.78	1.00	6	-24.38	42.16	46.00	-3.84
681.609	17.38	1.00	39	-24.50	41.88	46.00	-4.12
***							

Table 11 Open Field Radiated Emissions For 1GHz 18GHz [Channel 1, Base Vertical]

Radiated Emission				Correction Factors	Duty Cycle	Corrected Amplitude	FCC Class B (3 m)	
Frequency (GHz)	Amplitude (dBm V/m)	Ant. H. (m)	Table (°)	(dB)	(dB)	(dBm V/m)	Limit (dBm V/m)	Margin (dB)
1.645	59.50	1.00	56	-8.67	-6.46	44.37	54.00	-9.63
7.214	33.74	1.00	207	9.72	-6.46	37.00	54.00	-17.00
9.621	22.95	1.00	331	9.72	-6.46	26.21	54.00	-27.79
***								

Table 12 Open Field Radiated Emissions For 30MHz 1GHz [Channel 21, Base Horizontal]

Radiated Emission				Correction Factors	Corrected Amplitude	FCC Class B (3 m)	
Frequency (MHz)	Amplitude (dBmV/m)	Ant. H. (m)	Table (°)	(dB)	(dBmV/m)	Limit (dBmV/m)	Margin (dB)
131.071	23.86	2.47	126	-14.62	38.48	43.50	-5.02
211.205	24.79	1.00	114	-14.19	38.98	43.50	-4.52
220.805	26.70	1.00	131	-15.46	42.16	46.00	-3.84
364.805	23.61	1.00	150	-18.36	41.97	46.00	-4.03
384.005	22.08	1.00	99	-18.95	41.03	46.00	-4.97
624.009	19.02	1.00	140	-23.23	42.25	46.00	-3.75
***							

Table 13 Open Field Radiated Emissions For 1GHz 18GHz [Channel 21, Base Horizontal]

Radiated Emission				Correction Factors	Duty Cycle	Corrected Amplitude	FCC Class B (3 m)	
Frequency (GHz)	Amplitude (dBm V/m)	Ant. H. (m)	Table (°)	(dB)	(dB)	(dBm V/m)	Limit (dBm V/m)	Margin (dB)
7.322	31.95	1.00	156	9.72	-6.46	35.21	54.00	-18.79
9.761	20.31	1.00	28	9.72	-6.46	23.57	54.00	-30.43
***								

Table 14 Open Field Radiated Emissions For 30MHz 1GHz [Channel 21, Base Vertical]

Radiated Emission				Correction Factors	Corrected Amplitude	FCC Class B (3 m)	
Frequency (MHz)	Amplitude (dBmV/m)	Ant. H. (m)	Table (°)	(dB)	(dBmV/m)	Limit (dBmV/m)	Margin (dB)
48.003	15.47	1.00	24	-15.73	31.20	40.00	-8.80
65.537	26.21	1.00	33	-10.10	36.31	40.00	-3.69
201.604	20.79	2.45	26	-13.74	34.53	43.50	-8.97
220.804	20.16	1.00	96	-15.18	35.34	46.00	-10.66
364.806	18.38	1.00	47	-18.13	36.51	46.00	-9.49
662.409	18.13	1.00	28	-24.38	42.51	46.00	-3.49
681.609	17.58	1.00	17	-24.50	42.08	46.00	-3.92
***							

Table 15 Open Field Radiated Emissions For 1GHz 18GHz [Channel 21, Base Vertical]

Radiated Emission				Correction Factors	Duty Cycle	Corrected Amplitude	FCC Class B (3 m)	
Frequency (GHz)	Amplitude (dBm V/m)	Ant. H. (m)	Table (°)	(dB)	(dB)	(dBm V/m)	Limit (dBm V/m)	Margin (dB)
1.701	57.19	1.00	256	-8.67	-6.46	42.06	54.00	-11.94
7.322	35.61	1.00	33	9.72	-6.46	38.87	54.00	-15.13
9.761	23.48	1.00	194	9.72	-6.46	26.74	54.00	-27.26
***								

Table 16 Open Field Radiated Emissions For 30MHz 1GHz [Channel 40, Base Horizontal]

Radiated Emission				Correction Factors	Corrected Amplitude	FCC Class B (3 m)	
Frequency (MHz)	Amplitude (dBmV/m)	Ant. H. (m)	Table (°)	(dB)	(dBmV/m)	Limit (dBmV/m)	Margin (dB)
131.071	24.25	2.47	113	-14.62	38.87	43.50	-4.63
211.205	25.37	1.00	114	-14.19	39.56	43.50	-3.94
220.805	27.95	1.00	130	-15.46	43.41	46.00	-2.59
364.805	24.52	1.00	150	-18.36	42.88	46.00	-3.12
384.005	23.68	1.00	76	-18.95	42.63	46.00	-3.37
624.009	19.66	1.00	137	-23.23	42.89	46.00	-3.11
***							

Table 17 Open Field Radiated Emissions For 1GHz 18GHz [Channel 40, Base Horizontal]

Radiated Emission				Correction Factors	Duty Cycle	Corrected Amplitude	FCC Class B (3 m)	
Frequency (GHz)	Amplitude (dBm V/m)	Ant. H. (m)	Table (°)	(dB)	(dB)	(dBm V/m)	Limit (dBm V/m)	Margin (dB)
7.431	34.78	1.00	9	9.72	-6.46	38.04	54.00	-15.96
9.902	22.45	1.00	181	9.72	-6.46	25.71	54.00	-28.29
***								

Table 18 Open Field Radiated Emissions For 30MHz 1GHz [Channel 40, Base Vertical]

Radiated Emission				Correction Factors	Corrected Amplitude	FCC Class B (3 m)	
Frequency (MHz)	Amplitude (dBmV/m)	Ant. H. (m)	Table (°)	(dB)	(dBmV/m)	Limit (dBmV/m)	Margin (dB)
48.003	17.63	1.00	28	-15.73	33.36	40.00	-6.64
65.537	26.98	1.00	35	-10.10	37.08	40.00	-2.92
201.604	20.84	2.46	60	-13.74	34.58	43.50	-8.92
364.805	18.40	1.00	35	-18.13	36.53	46.00	-9.47
662.409	17.90	1.00	12	-24.38	42.28	46.00	-3.72
681.609	17.51	1.00	40	-24.50	42.01	46.00	-3.99
***							

Table 19 Open Field Radiated Emissions For 1GHz 18GHz [Channel 40, Base Vertical]

Radiated Emission				Correction Factors	Duty Cycle	Corrected Amplitude	FCC Class B (3 m)	
Frequency (GHz)	Amplitude (dBm V/m)	Ant. H. (m)	Table (°)	(dB)	(dB)	(dBm V/m)	Limit (dBm V/m)	Margin (dB)
1.751	50.87	1.00	9	-8.67	-6.46	35.74	54.00	-18.26
7.431	39.85	1.00	216	9.72	-6.46	43.11	54.00	-10.89
9.902	28.95	1.00	55	9.72	-6.46	32.21	54.00	-21.79
***								

Table 20 Open Field Radiated Emissions For 30MHz 1GHz [Channel 1, Handset Horizontal]

Radiated Emission				Correction Factors	Corrected Amplitude	FCC Class B (3 m)	
Frequency (MHz)	Amplitude (dBmV/m)	Ant. H. (m)	Table (°)	(dB)	(dBmV/m)	Limit (dBmV/m)	Margin (dB)
43.011	4.42	3.94	26	-18.62	23.04	40.00	-16.96
134.403	6.61	2.54	120	-14.71	21.32	43.50	-22.18
211.204	7.62	2.54	64	-14.19	21.81	43.50	-21.69
326.406	7.10	1.00	98	-17.23	24.33	46.00	-21.67
345.605	5.33	1.00	104	-17.87	23.20	46.00	-22.80
364.804	5.64	1.00	98	-18.36	24.00	46.00	-22.00
***							

Table 21 Open Field Radiated Emissions For 1GHz 18GHz [Channel 1, Handset Horizontal]

Radiated Emission				Correction Factors	Duty Cycle	Corrected Amplitude	FCC Class B (3 m)	
Frequency (GHz)	Amplitude (dBm V/m)	Ant. H. (m)	Table (°)	(dB)	(dB)	(dBm V/m)	Limit (dBm V/m)	Margin (dB)
1.645	63.89	1.00	91	-8.67	-6.46	48.76	54.00	-5.24
7.214	40.95	1.00	137	9.72	-6.46	44.21	54.00	-9.79
9.621	22.61	1.00	211	9.72	-6.46	25.87	54.00	-28.13
***								

Table 22 Open Field Radiated Emissions For 30MHz 1GHz [Channel 1, Handset Vertical]

Radiated Emission				Correction Factors	Corrected Amplitude	FCC Class B (3 m)	
Frequency (MHz)	Amplitude (dBmV/m)	Ant. H. (m)	Table (°)	(dB)	(dBmV/m)	Limit (dBmV/m)	Margin (dB)
124.803	15.32	1.00	136	-13.92	29.24	43.50	-14.26
153.604	16.17	1.00	104	-13.49	29.66	43.50	-13.84
403.206	15.21	1.00	123	-19.40	34.61	46.00	-11.39
499.209	15.45	1.00	66	-21.80	37.25	46.00	-8.75
508.807	16.32	1.00	8	-22.08	38.40	46.00	-7.60
528.007	13.17	1.00	144	-22.39	35.56	46.00	-10.44
***							

Table 23 Open Field Radiated Emissions For 1GHz 18GHz [Channel 1, Handset Vertical]

Radiated Emission				Correction Factors	Duty Cycle	Corrected Amplitude	FCC Class B (3 m)	
Frequency (GHz)	Amplitude (dBm V/m)	Ant. H. (m)	Table (°)	(dB)	(dB)	(dBm V/m)	Limit (dBm V/m)	Margin (dB)
1.645	66.46	1.00	249	-8.67	-6.46	51.33	54.00	-2.67
7.214	44.61	1.00	267	9.72	-6.46	47.87	54.00	-6.13
9.621	23.95	1.00	37	9.72	-6.46	27.21	54.00	-26.79
***								

Table 24 Open Field Radiated Emissions For 30MHz 1GHz [Channel 21, Handset Horizontal]

Radiated Emission				Correction Factors	Corrected Amplitude	FCC Class B (3 m)	
Frequency (MHz)	Amplitude (dBmV/m)	Ant. H. (m)	Table (°)	(dB)	(dBmV/m)	Limit (dBmV/m)	Margin (dB)
43.013	4.21	3.95	67	-18.61	22.82	40.00	-17.18
134.404	6.89	2.48	129	-14.71	21.60	43.50	-21.90
211.204	7.26	2.48	55	-14.19	21.45	43.50	-22.05
326.406	5.94	1.00	109	-17.23	23.17	46.00	-22.83
345.606	4.60	1.00	110	-17.96	22.56	46.00	-23.44
364.805	4.56	1.00	101	-18.36	22.92	46.00	-23.08
***							

Table 25 Open Field Radiated Emissions For 1GHz 18GHz [Channel 21, Handset Horizontal]

Radiated Emission				Correction Factors	Duty Cycle	Corrected Amplitude	FCC Class B (3 m)	
Frequency (GHz)	Amplitude (dBm V/m)	Ant. H. (m)	Table (°)	(dB)	(dB)	(dBm V/m)	Limit (dBm V/m)	Margin (dB)
1.701	61.48	1.00	61	-8.67	-6.46	46.35	54.00	-7.65
7.322	36.61	1.00	159	9.72	-6.46	39.87	54.00	-14.13
9.761	22.61	1.00	24	9.72	-6.46	25.87	54.00	-28.13
***								

Table 26 Open Field Radiated Emissions For 30MHz 1GHz [Channel 21, Handset Vertical]

Radiated Emission				Correction Factors	Corrected Amplitude	FCC Class B (3 m)	
Frequency (MHz)	Amplitude (dBmV/m)	Ant. H. (m)	Table (°)	(dB)	(dBmV/m)	Limit (dBmV/m)	Margin (dB)
43.011	6.79	1.00	43	-17.87	24.66	40.00	-15.34
124.804	14.55	1.00	115	-13.92	28.47	43.50	-15.03
192.005	16.55	2.46	133	-13.01	29.56	43.50	-13.94
384.006	13.89	1.00	91	-18.61	32.50	46.00	-13.50
480.006	15.10	1.00	17	-21.32	36.42	46.00	-9.58
489.607	14.74	1.00	69	-21.70	36.44	46.00	-9.56
***							

Table 27 Open Field Radiated Emissions For 1GHz 18GHz [Channel 21, Handset Vertical]

Radiated Emission				Correction Factors	Duty Cycle	Corrected Amplitude	FCC Class B (3 m)	
Frequency (GHz)	Amplitude (dBm V/m)	Ant. H. (m)	Table (°)	(dB)	(dB)	(dBm V/m)	Limit (dBm V/m)	Margin (dB)
1.701	67.51	1.00	304	-8.67	-6.46	52.38	54.00	-1.62
7.322	39.85	1.00	64	9.72	-6.46	43.11	54.00	-10.89
9.761	22.11	1.00	224	9.72	-6.46	25.37	54.00	-28.63
***								

Table 28 Open Field Radiated Emissions For 30MHz 1GHz [Channel 40, Handset Horizontal]

Radiated Emission				Correction Factors	Corrected Amplitude	FCC Class B (3 m)	
Frequency (MHz)	Amplitude (dBmV/m)	Ant. H. (m)	Table (°)	(dB)	(dBmV/m)	Limit (dBmV/m)	Margin (dB)
43.010	2.52	2.47	88	-18.62	21.14	40.00	-18.86
134.402	2.18	2.47	139	-14.71	16.89	43.50	-26.61
211.202	4.64	2.47	58	-14.19	18.83	43.50	-24.67
326.406	2.38	1.00	113	-17.23	19.61	46.00	-26.39
345.602	1.22	1.00	104	-17.87	19.09	46.00	-26.91
364.805	0.74	1.00	135	-18.36	19.10	46.00	-26.90
***							

Table 29 Open Field Radiated Emissions For 1GHz 18GHz [Channel 40, Handset Horizontal]

Radiated Emission				Correction Factors	Duty Cycle	Corrected Amplitude	FCC Class B (3 m)	
Frequency (GHz)	Amplitude (dBm V/m)	Ant. H. (m)	Table (°)	(dB)	(dB)	(dBm V/m)	Limit (dBm V/m)	Margin (dB)
1.751	51.57	1.00	6	-8.67	-6.46	36.44	54.00	-17.56
7.431	41.95	1.00	192	9.72	-6.46	45.21	54.00	-8.79
***								

Table 30 Open Field Radiated Emissions For 30MHz 1GHz [Channel 40, Handset Vertical]

Radiated Emission				Correction Factors	Corrected Amplitude	FCC Class B (3 m)	
Frequency (MHz)	Amplitude (dBmV/m)	Ant. H. (m)	Table (°)	(dB)	(dBmV/m)	Limit (dBmV/m)	Margin (dB)
43.011	4.72	1.00	8	-17.87	22.59	40.00	-17.41
124.804	16.11	1.00	128	-13.92	30.03	43.50	-13.47
182.405	15.22	1.00	83	-12.13	27.35	43.50	-16.15
364.807	16.23	1.00	81	-18.13	34.36	46.00	-11.64
460.807	14.42	1.00	78	-21.10	35.52	46.00	-10.48
489.605	15.23	1.00	66	-21.70	36.93	46.00	-9.07
***							

Table 31 Open Field Radiated Emissions For 1GHz 18GHz [Channel 40, Handset Vertical]

Radiated Emission				Correction Factors	Duty Cycle	Corrected Amplitude	FCC Class B (3 m)	
Frequency (GHz)	Amplitude (dBm V/m)	Ant. H. (m)	Table (°)	(dB)	(dB)	(dBm V/m)	Limit (dBm V/m)	Margin (dB)
1.751	65.26	1.00	69	-8.67	-6.46	50.13	54.00	-3.87
7.431	41.45	1.00	168	9.72	-6.46	44.71	54.00	-9.29
9.902	22.45	1.00	319	9.72	-6.46	25.71	54.00	-28.29
***								

Ⅵ. Section 15.247(d): Power Spectral Density

6.1 Test Condition & Setup

The tests below are running with the DCT transmitter set at high power in TDD mode .A serial port from a computer to the DCT. The EUT is needed to force selection of output power level and channel number. While testing, EUT was set to transmit continuously. A log antenna was connected with the spectrum analyzer.

The EUT is tested in open field site. Put EUT on the middle of a wooden table. Set spectrum analyzer RBW = 3 KHz, VBW > RBW (e.g. VBW = 10 KHz), Span = 2 MHz. Turn around the table to find maximum emission. Then sweep time = 100 sec. Peak the maximum emission again. The peak level measured must be no greater than + 8dBm.

The setting up procedure is recorded on Appendix A.

6.2 Test Instruments Configuration

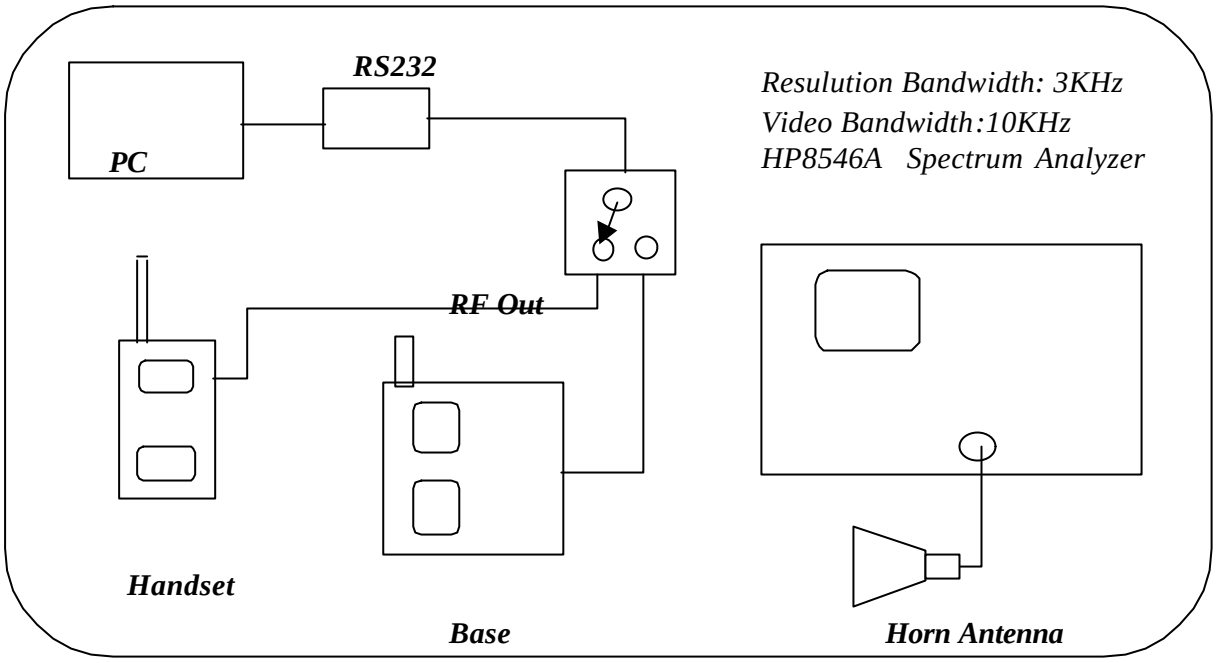

P.S.A serial port from notebook computer to control the EUT at maximal power output and channel Number.

Fig 12. Test Configuration of power spectral density

6.3 List of Test Instruments

Instrument Name	Model No.	Brand	Serial No.	Last time	Next time
EMI Receiver	8546A	H P	3520A00242	10/18/00	10/18/01
RF Filter Section	85460A	H P	3448A00217	10/18/00	10/18/01
Horn Antenna	3115	EMCO	9704 – 5178	08/15/00	08/15/01

6.4 Required of Carrier frequency

If any 100 kHz bandwidth outside these frequency bands, the radio frequency power that is produced by the modulation products of the spreading sequence, the information sequence and the carrier frequency shall be either at least 20 dB below that in any 100 kHz bandwidth within the band that contains the highest level of the desired power or shall not exceed the general levels specified id § 15.209(a), whichever results in the lesser attenuation.

Test Condition & Setup: same as 3.1

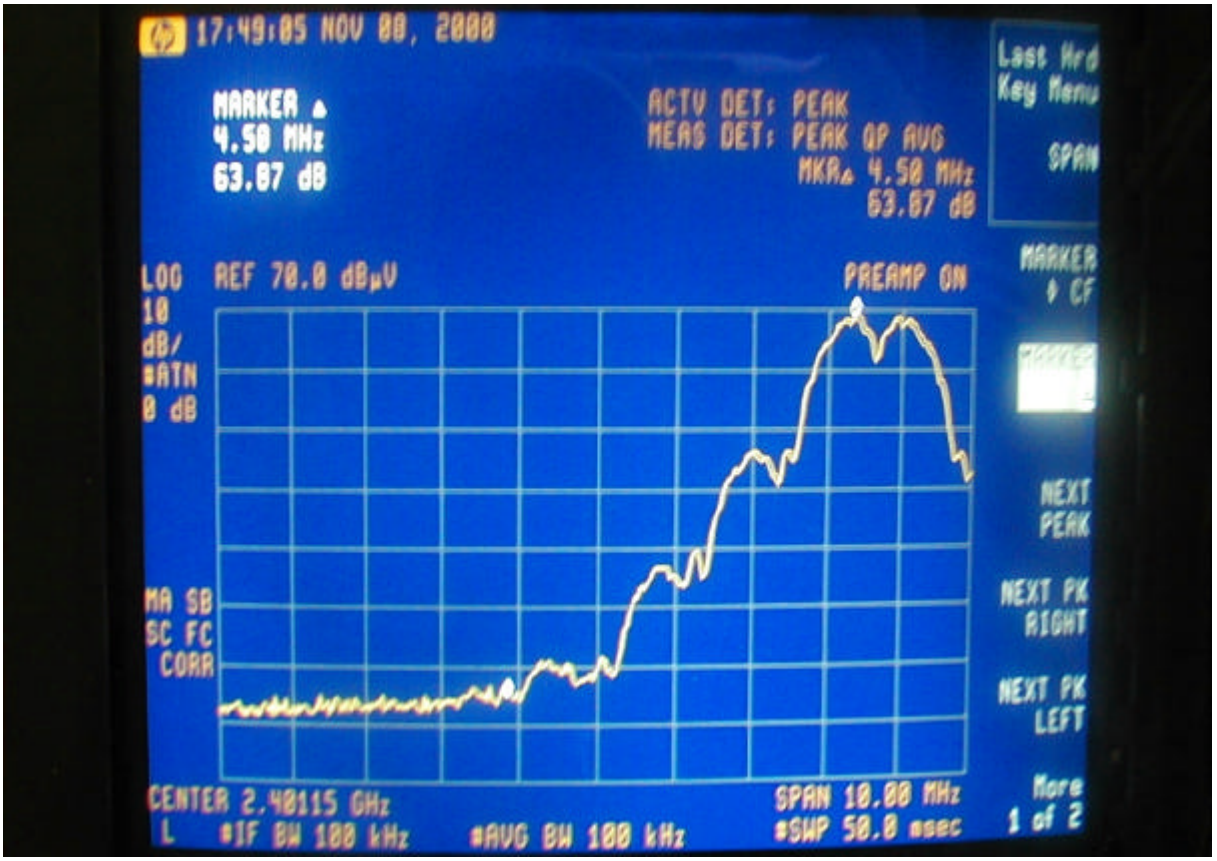
17:49:05 NOV 08, 2000
MARKER ▲
4.50 MHz
63.87 dB
ACTV DET: PEAK
MEAS DET: PEAK QP AVG
MKR▲ 4.50 MHz
63.87 dB
Last Hrd Key Menu
SPAN
LOG 10 dB/ #ATN 0 dB
REF 70.0 dBμV
PREAMP ON
MARKER ↓ CF
NEXT PEAK
NEXT PK RIGHT
NEXT PK LEFT
MA SB SC FC CORR
CENTER 2.40115 GHz
L #IF BW 100 kHz
#AVG BW 100 kHz
SPAN 10.00 MHz
#SWP 50.0 msec
More 1 of 2

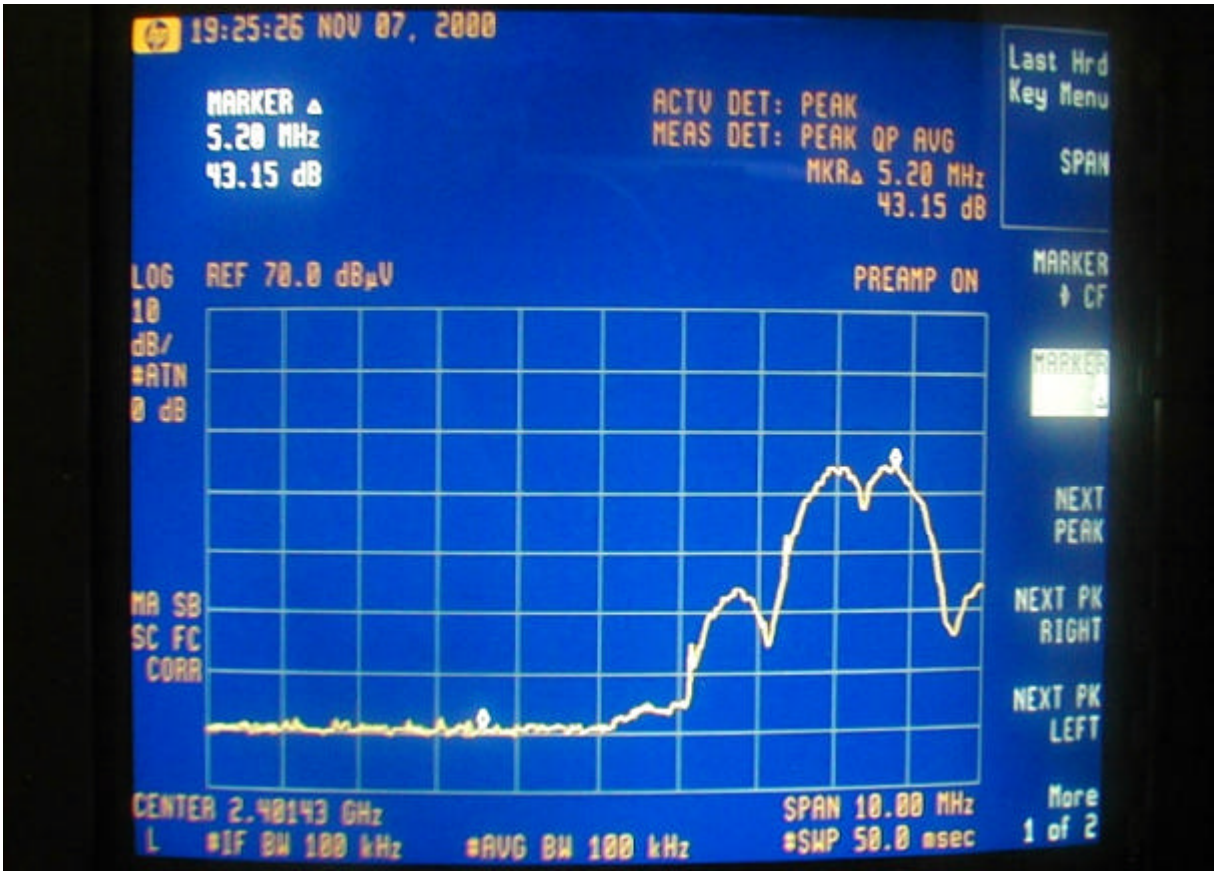
19:25:26 NOV 07, 2000
MARKER ▲
5.20 MHz
43.15 dB
ACTV DET: PEAK
MEAS DET: PEAK QP AVG
MKR▲ 5.20 MHz
43.15 dB
Last Hrd Key Menu
SPAN
LOG 10 dB/ #ATN 0 dB
REF 70.0 dBμV
PREAMP ON
MARKER ↓ CF
NEXT PEAK
NEXT PK RIGHT
NEXT PK LEFT
MA SB SC FC CORR
CENTER 2.40143 GHz
L #IF BW 100 kHz
#AVG BW 100 kHz
SPAN 10.00 MHz
#SWP 50.0 msec
More 1 of 2

6.5 Test Result of Power spectral density.

The following table shows a summary of the highest power out of UT.

Model No. : SPP-A2470

EUT : Cordless Telephone with Answering System

Table 33. Power Spectral Density

Channel	*Frequency (MHz)*	*Ppr (dBuV)*	*CF (dB)*	*Ppq (dBm)*	*Limit (dB)*	*Margin (dB)*
B/S CH 01	2.4048	63.18	35.60	3.55	8.00	-4.45
B/S CH 21	2.4408	59.51	35.60	-0.12	8.00	-8.12
B/S CH 40	2.4750	60.42	35.60	0.79	8.00	-7.21
H/S CH 01	2.4048	37.02	35.60	-22.61	8.00	-30.61
H/S CH 21	2.4408	40.90	35.60	-18.73	8.00	-26.73
H/S CH 40	2.4750	39.90	35.60	-19.73	8.00	-27.73

Note:

1. The attachment follow by this page and there is no page number.
2. Ppr: spectrum read power density (using peak search mode), CF: correct factor, Ppq: actual peak power density in the spread spectrum band.
3. Ppq = Ppr + CF
4. Effective Radiation Power (E.R.P.) = $(E\ d)^2 / 30G$

E is the measured maximum field strength in V/m utilizing the maximum hold mode

RBW (3KHz).

G is the numeric gain of the transmitting antenna over an isotropic radiator (1.00).

d is the distance in meters from which the field strength was measured (3M).

Example: the Max Radiation Emission of base ch01 = 63.18 + (35.60) = 98.78 dBμV/m

$10^{(98.78/20)} \times 10^{-6} = 0.086896$ V

E.R.P. = $(0.086896 \times 3)^2 / 30 = 2.265277$ mW

= 10 x log (2.265277 mW/1mW)

= 3.55 dBm

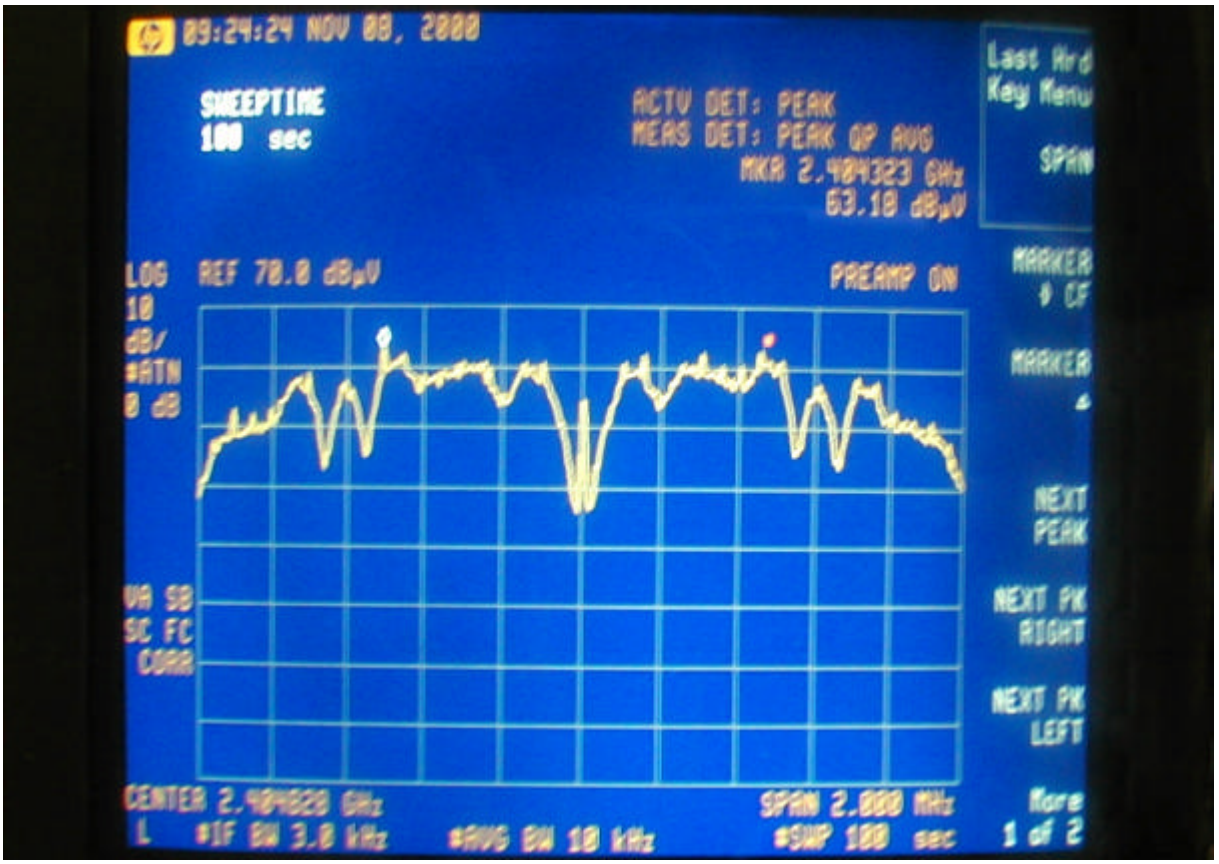
09:24:24 NOV 08, 2000
SWEEPTIME
100 sec
ACTV DET: PEAK
MEAS DET: PEAK QP AVG
MKR 2.404323 GHz
63.10 dBµV
Last Hrd
Key Menu
SPAN
LOG REF 70.0 dBµV
PREAMP ON
10
dB/
#ATN
0 dB
MARKER
→ CF
MARKER
NEXT
PEAK
VA SB
SC FC
CORR
NEXT PK
RIGHT
NEXT PK
LEFT
CENTER 2.404828 GHz
SPAN 2.000 MHz
More
L #IF BW 3.0 kHz #AVG BW 10 kHz #SWP 100 sec
1 of 2

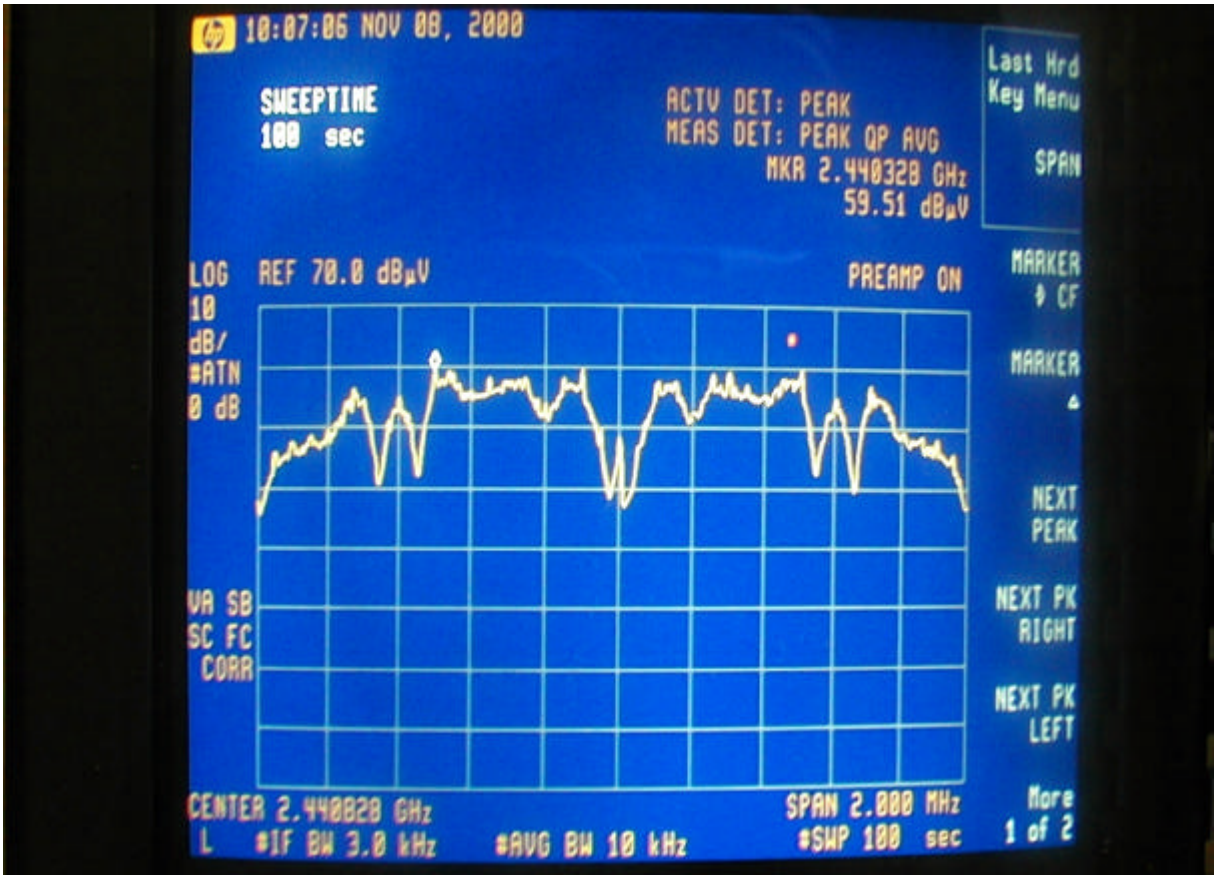
10:07:06 NOV 08, 2000
SWEEPTIME
100 sec
ACTV DET: PEAK
MEAS DET: PEAK QP AVG
MKR 2.440328 GHz
59.51 dBµV
Last Hrd
Key Menu
SPAN
LOG REF 70.0 dBµV
PREAMP ON
10
dB/
#ATN
0 dB
MARKER
→ CF
MARKER
NEXT
PEAK
VA SB
SC FC
CORR
NEXT PK
RIGHT
NEXT PK
LEFT
CENTER 2.440828 GHz
SPAN 2.000 MHz
More
L #IF BW 3.0 kHz #AVG BW 10 kHz #SWP 100 sec
1 of 2

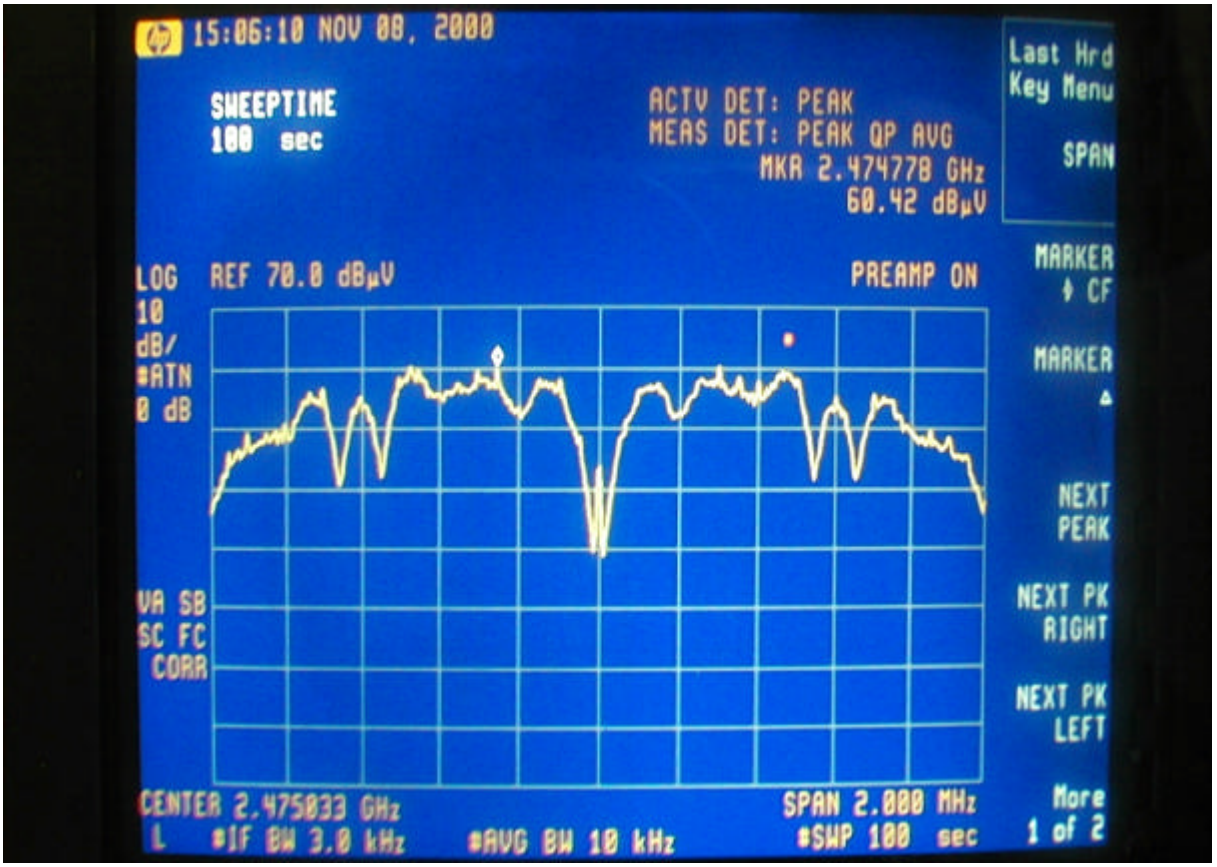
15:06:10 NOV 08, 2000
SWEEPTIME
100 sec
ACTV DET: PEAK
MEAS DET: PEAK QP AVG
MKR 2.474778 GHz
60.42 dBμV
Last Hrd Key Menu
SPAN
LOG 10 dB/
#ATN 0 dB
REF 70.0 dBμV
PREAMP ON
MARKER ↓ CF
MARKER Δ
NEXT PEAK
NEXT PK RIGHT
NEXT PK LEFT
VA SB SC FC CORR
CENTER 2.475033 GHz
L #IF BW 3.0 kHz
#AVG BW 10 kHz
SPAN 2.000 MHz
#SWP 100 sec
More 1 of 2

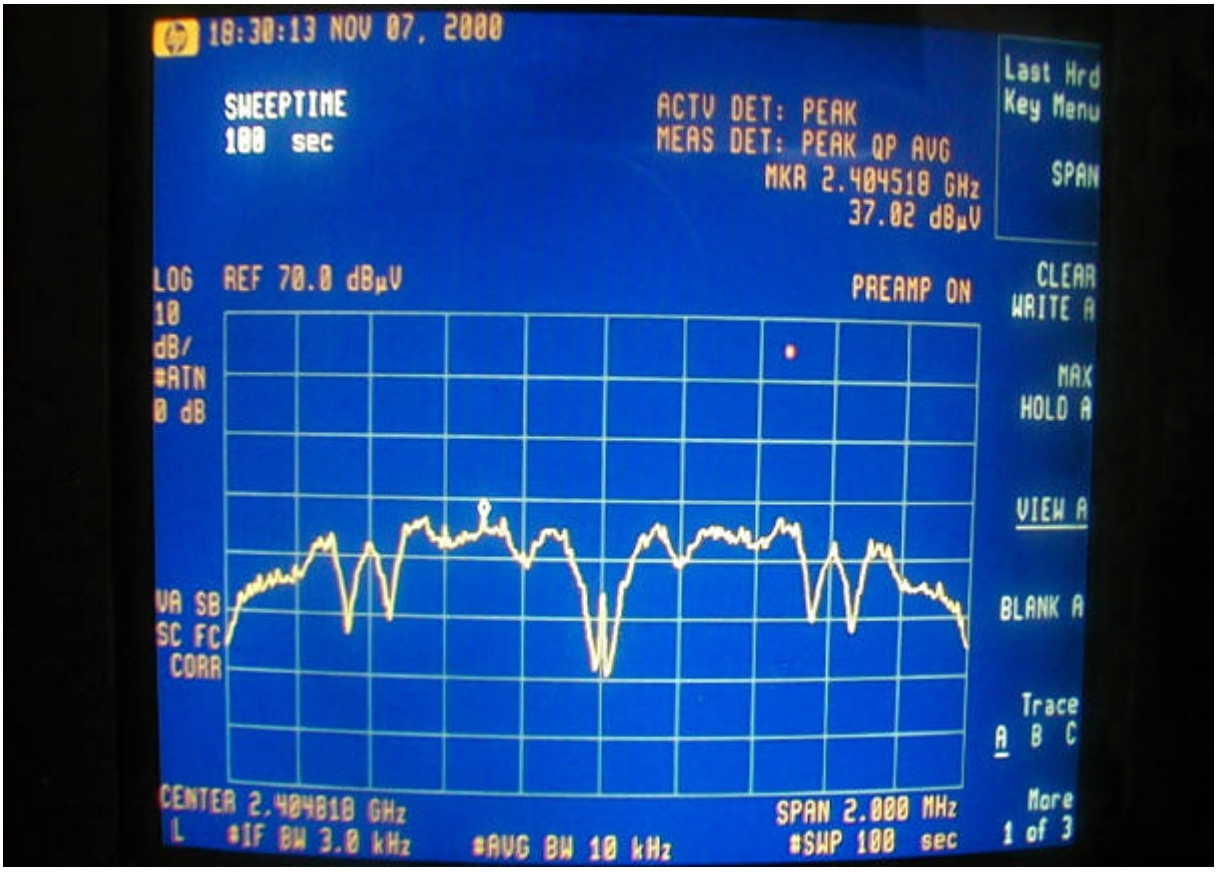
18:30:13 NOV 07, 2000
SWEEPTIME
100 sec
ACTV DET: PEAK
MEAS DET: PEAK QP AVG
MKR 2.404518 GHz
37.02 dBμV
Last Hrd Key Menu
SPAN
LOG 10 dB/
#ATN 0 dB
REF 70.0 dBμV
PREAMP ON
CLEAR WRITE A
MAX HOLD A
VIEW A
BLANK A
Trace A B C
VA SB SC FC CORR
CENTER 2.404818 GHz
L #IF BW 3.0 kHz
#AVG BW 10 kHz
SPAN 2.000 MHz
#SWP 100 sec
More 1 of 3

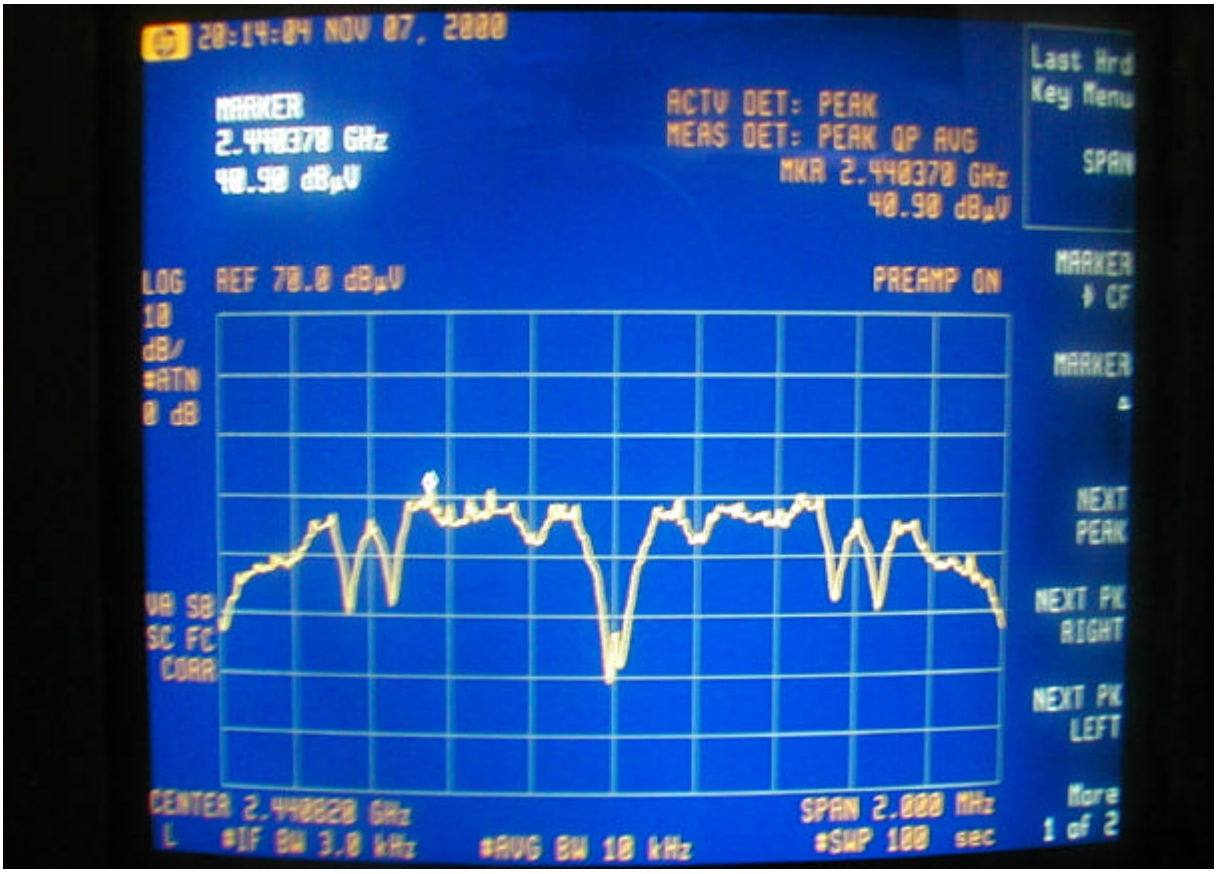
20:14:04 NOV 07, 2000
MARKER
2.440370 GHz
40.90 dBµV
ACTV DET: PEAK
MEAS DET: PEAK QP AVG
MKR 2.440370 GHz
40.90 dBµV
Last Hrd
Key Menu
SPAN
LOG
10
dB/
#ATN
0 dB
REF 70.0 dBµV
PREAMP ON
MARKER
→ CF
MARKER
NEXT
PEAK
NEXT PK
RIGHT
NEXT PK
LEFT
More
1 of 2
VA SB
SC FC
CORR
CENTER 2.440620 GHz
L #IF BW 3.0 kHz
#AVG BW 10 kHz
SPAN 2.000 MHz
#SWP 100 sec

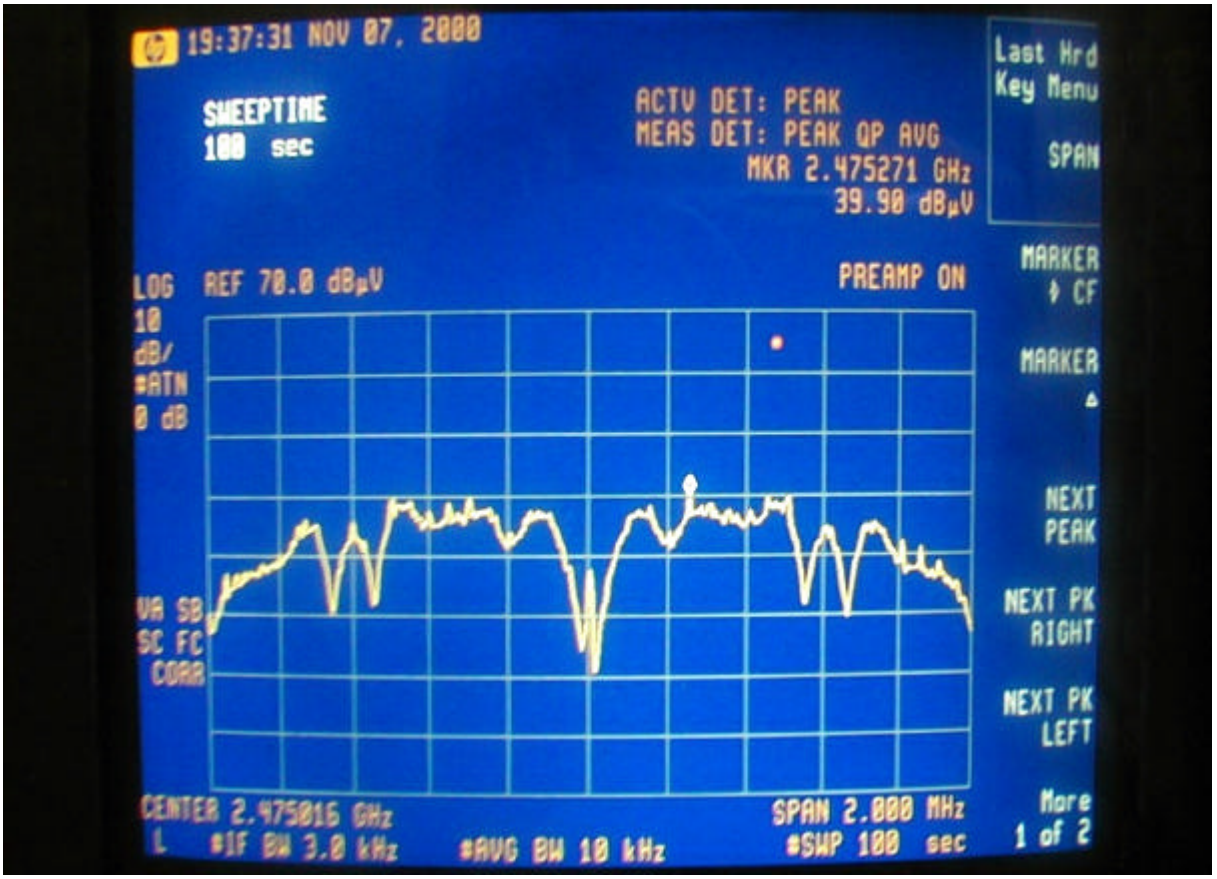
19:37:31 NOV 07, 2000
SWEEPTIME
100 sec
ACTV DET: PEAK
MEAS DET: PEAK QP AVG
MKR 2.475271 GHz
39.90 dBµV
Last Hrd
Key Menu
SPAN
LOG
10
dB/
#ATN
0 dB
REF 70.0 dBµV
PREAMP ON
MARKER
→ CF
MARKER
NEXT
PEAK
NEXT PK
RIGHT
NEXT PK
LEFT
More
1 of 2
VA SB
SC FC
CORR
CENTER 2.475016 GHz
L #IF BW 3.0 kHz
#AVG BW 10 kHz
SPAN 2.000 MHz
#SWP 100 sec

Ⅶ Section 15.247(e): Processing Gain

7.1 Test Condition & Setup

A. Bit Error Rate (Pe)

The subjective device RF module (base & handset) digital modulation by Differential Phase -Shift Keying (DPSK), the DPSK can use it's previous waveform as the phase reference for demodulation and thus requires no coherent detection, which greatly simplifies the receiver structure but with some Bit Error Rate (BER) degradation because of noisy phase reference. There is tradeoff between system complexity and system performance. In order to driver the DPSK error probability, we observe that DPSK using differential coding , we observable that DPSK using different coding is essentially an orthogonal signal scheme. A binary 1 is transmitted a sequence of two pulse (P,P) or (-P,-P) over 2 To seconds (no transition). Similarly, a binary 0 is transmitted by a sequence of two plus (P,-P) or (-P,P) over 2 TO seconds (transition). Either of the pulse sequences used for binary 1 is orthogonal to either of the pulse sequences used for binary 0. Because no local carrier is generated for demodulation, the detection is noncoherent , with an effective pulse energy equal to 2 Ep (twice the energy of pulse P). The actual energy transmitted per digit only Ep, however, the same as in noncoherent FSK, Consequently, the performance of DPSK is 3 dB superior to that of noncoherent FSK, We can write Pe for DPSK as :

The major component inside the subjective device are supplied by Rock well , Included RF block transmitter (RF101), Receiver (RF 100), and Base band block ASIC (c8502-13), CODEC (10497-14), above 4 IC chips are affected the processing gain as following :

J/S = (W/RD) / (ED/NO) [without CODING]

Where: W= Spread Chip Rate = Required Transmitted Base band Bandwidth.

Rb = Information Data Rate

Eb/No = Require Energy per Bit over noise Spectral Density for a Specific Bit Error Probability.

The subjective Device Information Data Rate are 80k and the Spread Chip Rate are 960k So the processing gain (10 log w/Rb) at least 10.79 dB (without Coding).

The ASIC (c8502-13) and CODEC (10497-14) these two chip included the coding function, So, it is great improve the processing gain and also improve the J/S ratio.

The Engineer work for Rock well System in Taiwan had pass us the information about the probability of error rate (Pe) must be lower than 0.001 that the system performance will satisfy for communication between Handset and Base station.

Why we need the Pe lower than 0.001, the Rockwell Semiconductor System is not explained , Since it relative with ASIC and Codec, it is confidential area that Rockwell is not allow to disdouse to the public.

When Pe = 0.001 and then Signal to Noise Ratio (S/N) = 6.2194 = 7.9dB.

B. Jamming Margin Method

The Rockwell Semiconductor System give us a software operated in the personal computer, and use the computer series port COM1 and COM2 connect Handset and Base than we can measure the Bit Error Rate.

Using this software we can perform Jamming Margin method testing, The test consists of stepping a signal generator in 50 KHz increments across the pass band of the system. At each point, the generator level required to produce the recommend Bit Error Rate (BER = 10e - 3) is recorded. This level is the jamming level. The maximum implementation loss a system can claim in calculating processing gain is 2 dB. The equation to calculate the processing gain (Gp) is the following:

Gp = (S/N) + Mj + Lsys

Gp = 8 dB + Mj + 2 dB

FCC regulation section 15.247 (e) rewire the processing gain of a direct sequence system shall be at least 10 dB, when Gp must be greater than 10 dB, then the Jammer must be greater than 0 dB.

The processing gain may be measured using the CW jamming margin method. The Jammer to Signal (J/S) ratio is then calculated. Discard the worst 20% of the J/S data points.

1. For avoid the handset and basestation are situation, so, the EUT were in low , medium power mode.

2. The signal generator was selected in interference band, using this software we can perform Jamming Margin method testing, the test consists of stepping a signal generator is 50 KHz increments across the pass band of the system. So, the BER will keep in 0.1%.

The setting up procedure is recorded on Appendix A.

7.2 Test Instruments Configuration

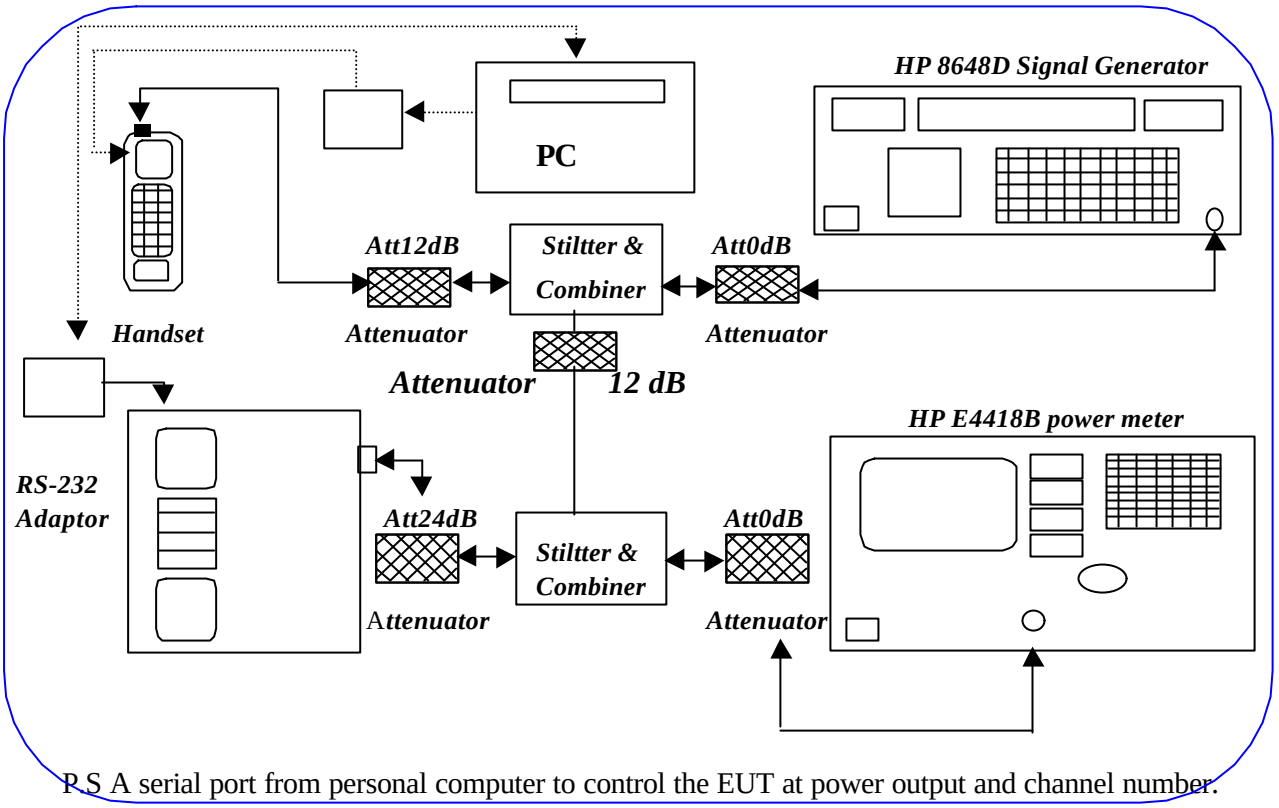

P.S A serial port from personal computer to control the EUT at power output and channel number.

Fig 13. Test Configuration of processing gain for base station (Low power mode)

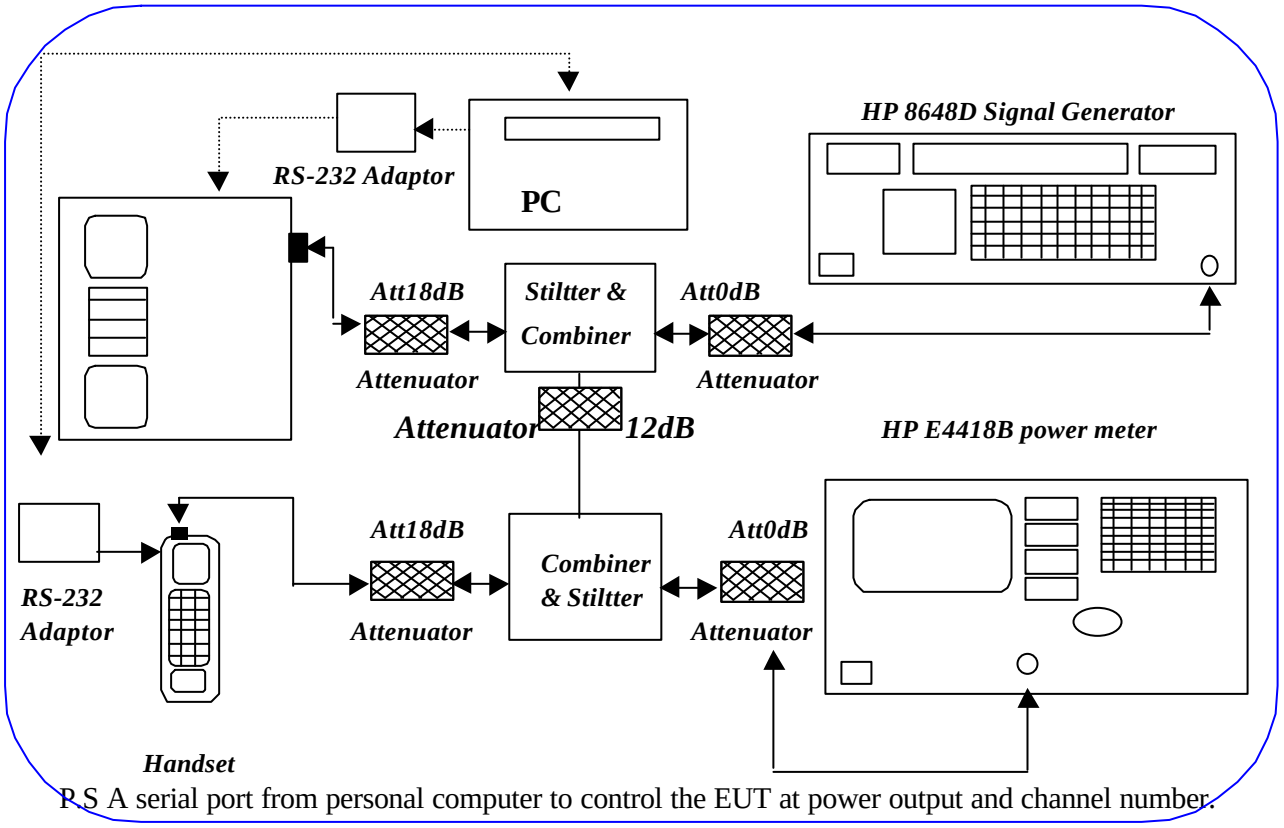

P.S A serial port from personal computer to control the EUT at power output and channel number.

Fig. 14 Test Configuration of processing gain for handset (Medium power mode)

7.3 List of Test Instruments

Instrument Name	Model No	Brand	Serial No.	Last time	Next time
Signal Generator	8648D	HP	3613A00117	05/19/00	05/19/01
Power Meter	E4418B	HP	GB39291240	09/11/00	09/11/01
Attenuator (6dB to 18 GHz)	MCL	BW-S6W2	Mini Circuits		

7.4 Test Procedure

According to the Fig. 13 of the page 65, combine the stuffs.

Measure the low power output of the channel 10 of the handset while the handset is in "Transmit-Only-Test" and the whole circuit is as same as Fig. 13. What we measure in this step is "S".

Change to the "BER Test " program. Increase the RF output of the signal generator till the BER is close to the 0.1% but under 0.1%.

Stop the program and turn off the base, handset then record the highest point of the spectrum. What we measure in this step is "J".

Star the Program again and test the next point.

7.5 Test Result of Processing Gain

Table 34 Processing Gain [Channel 21, Base]

Jammer Frequency (MHz)	Signal Level S (dBm)	Signal Generator RF Output J (dBm)	Mj (J/S)	Process Gain (dB)
2439.80	-44.20	-22.00	22.20	32.10
2439.85	-44.20	-23.00	21.20	31.10
2439.90	-44.20	-25.00	19.20	29.10
2439.95	-44.20	-26.50	17.70	27.60
2440.00	-44.20	-26.50	17.70	27.60
2440.05	-44.20	-30.00	14.20	24.10
2440.10	-44.20	-31.50	12.70	22.60
2440.15	-44.20	-26.10	18.10	28.00
2440.20	-44.20	-30.00	14.20	24.10
2440.25	-44.20	-28.80	15.40	25.30
2440.30	-44.20	-31.00	13.20	23.10
2440.35	-44.20	-35.00	9.20	19.10
2440.40	-44.20	-32.10	12.10	22.00
2440.45	-44.20	-32.60	11.60	21.50
2440.50	-44.20	-32.60	11.60	21.50
2440.55	-44.20	-33.40	10.80	20.70
2440.60	-44.20	-29.80	14.40	24.30
2440.65	-44.20	-31.50	12.70	22.60
2440.70	-44.20	-33.80	10.40	20.30
2440.75	-44.20	-28.30	15.90	25.80
2440.80	-44.20	-26.10	18.10	28.00
2440.85	-44.20	-26.10	18.10	28.00
2440.90	-44.20	-31.00	13.20	23.10
2440.95	-44.20	-33.40	10.80	20.70
2441.00	-44.20	-30.50	13.70	23.60
2441.05	-44.20	-32.50	11.70	21.60
2441.10	-44.20	-33.80	10.40	20.30
2441.15	-44.20	-32.60	11.60	21.50
2441.20	-44.20	-32.00	12.20	22.10
2441.25	-44.20	-32.90	11.30	21.20
2441.30	-44.20	-34.00	10.20	20.10
2441.35	-44.20	-26.70	17.50	27.40
2441.40	-44.20	-31.00	13.20	23.10
2441.45	-44.20	-28.90	15.30	25.20
2441.50	-44.20	-28.90	15.30	25.20
2441.55	-44.20	-32.50	11.70	21.60
2441.60	-44.20	-28.00	16.20	26.10
2441.65	-44.20	-27.50	16.70	26.60
2441.70	-44.20	-25.50	18.70	28.60
2441.75	-44.20	-24.50	19.70	29.60
2441.80	-44.20	-21.00	23.20	33.10

Test Result : Processing Gain: 21.20 dB

Table 35 Processing Gain [Channel 21, Handset]

Jammer Frequency (MHz)	Signal Level S (dBm)	Signal Generator RF Output J (dBm)	Mj (J/S)	Process Gain (dB)
2439.80	-52.70	-39.52	13.18	23.08
2439.85	-52.70	-39.52	13.18	23.08
2439.90	-52.70	-42.76	9.94	19.84
2439.95	-52.70	-43.87	8.83	18.73
2440.00	-52.70	-44.25	8.45	18.35
2440.05	-52.70	-46.20	6.50	16.40
2440.10	-52.70	-48.20	4.50	14.40
2440.15	-52.70	-45.08	7.62	17.52
2440.20	-52.70	-47.00	5.70	15.60
2440.25	-52.70	-47.00	5.70	15.60
2440.30	-52.70	-47.00	5.70	15.60
2440.35	-52.70	-50.60	2.10	12.00
2440.40	-52.70	-49.40	3.30	13.20
2440.45	-52.70	-48.90	3.80	13.70
2440.50	-52.70	-49.75	2.95	12.85
2440.55	-52.70	-49.75	2.95	12.85
2440.60	-52.70	-48.30	4.40	14.30
2440.65	-52.70	-48.30	4.40	14.30
2440.70	-52.70	-49.60	3.10	13.00
2440.75	-52.70	-46.70	6.00	15.90
2440.80	-52.70	-46.20	6.50	16.40
2440.85	-52.70	-46.80	5.90	15.80
2440.90	-52.70	-47.00	5.70	15.60
2440.95	-52.70	-49.50	3.20	13.10
2441.00	-52.70	-47.80	4.90	14.80
2441.05	-52.70	-48.50	4.20	14.10
2441.10	-52.70	-50.00	2.70	12.60
2441.15	-52.70	-49.20	3.50	13.40
2441.20	-52.70	-49.10	3.60	13.50
2441.25	-52.70	-49.20	3.50	13.40
2441.30	-52.70	-50.60	2.10	12.00
2441.35	-52.70	-46.50	6.20	16.10
2441.40	-52.70	-47.50	5.20	15.10
2441.45	-52.70	-46.10	6.60	16.50
2441.50	-52.70	-46.10	6.60	16.50
2441.55	-52.70	-48.60	4.10	14.00
2441.60	-52.70	-46.30	6.40	16.30
2441.65	-52.70	-45.10	7.60	17.50
2441.70	-52.70	-45.00	7.70	17.60
2441.75	-52.70	-42.50	10.20	20.10
2441.80	-52.70	-39.20	13.50	23.40

Test Result: Processing Gain: 13.10 dB

Note: GP = (S/No) + Mj + Lsys = 7.9dB + Mj + 2 dB

Appendix A

Setting up Procedure

1. Using an RS-232 Adaptor that is given by customer connected with the COM 1 of the computer.
2. The other end of the RS-232 Adaptor is connected with the EUT.
3. Use the software that is given by the customer and operated in the windows to control the EUT's continuous transmission.

Appendix B

Antenna Sketch

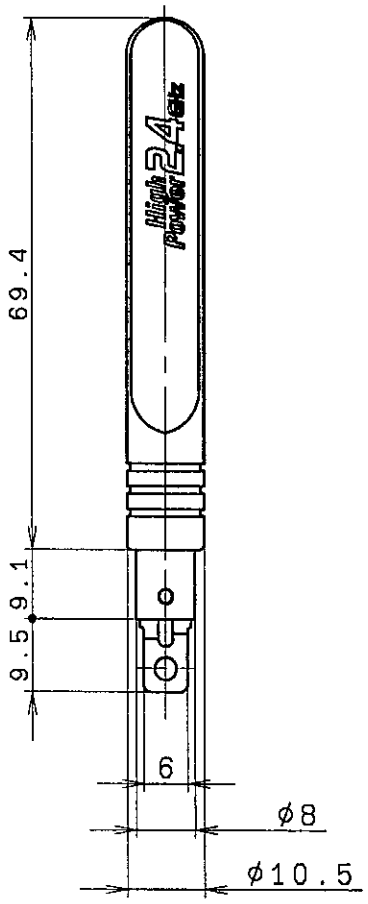

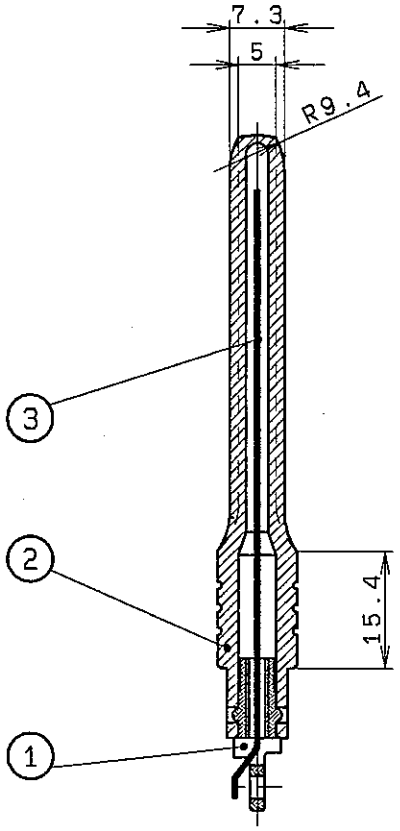

NO.	MATERIAL	NAME	QUANTITY	REMARK
番号	材料	名称	数量	備考
1	ABS	HOLDER(ANTENNA)	1	
2	ELASTOMER	COVER(ANTENNA)	1	
3	Cu(φ0.6)	WIRE	1	L=80

NOTE1) NO INDICATING DRAFTS ARE WITHIN THE TOLERANCE.

2) THE POSITION OF THE GATE AND CAVITY NO. ARE DECIDED THE MEETING

3) THE MARKS OF EJECTER PINS ARE DENTS.

4) THE SURFACE HAS NO SCRATCH, DIRT, BAD PRINTING.

5) THE SURFACE OF THE CAVITY IS APPEARANCE WHICH HAS MOLD ETCHING

THE ETCHING GRADE IS (NIPPON ETCHING HN-3007G)

STS-3

L≦ 4	±0.2
4<L≦ 16	±0.3
16<L≦ 63	±0.4
63<L≦250	±0.5
250<L	±0.7

SCALE	DESCRIPTION	PART NO.	SHEET
1:1	(E) ANTENNA(HAND) (J) アンテナ(ハンド゛)	X-3380-119-1	/

DRAWING (TYPE D47)

SONY STANDARD '90.10

A4

手配番号（製品コードNo）
TE14023B0C0

参考図

B－B' 断面図

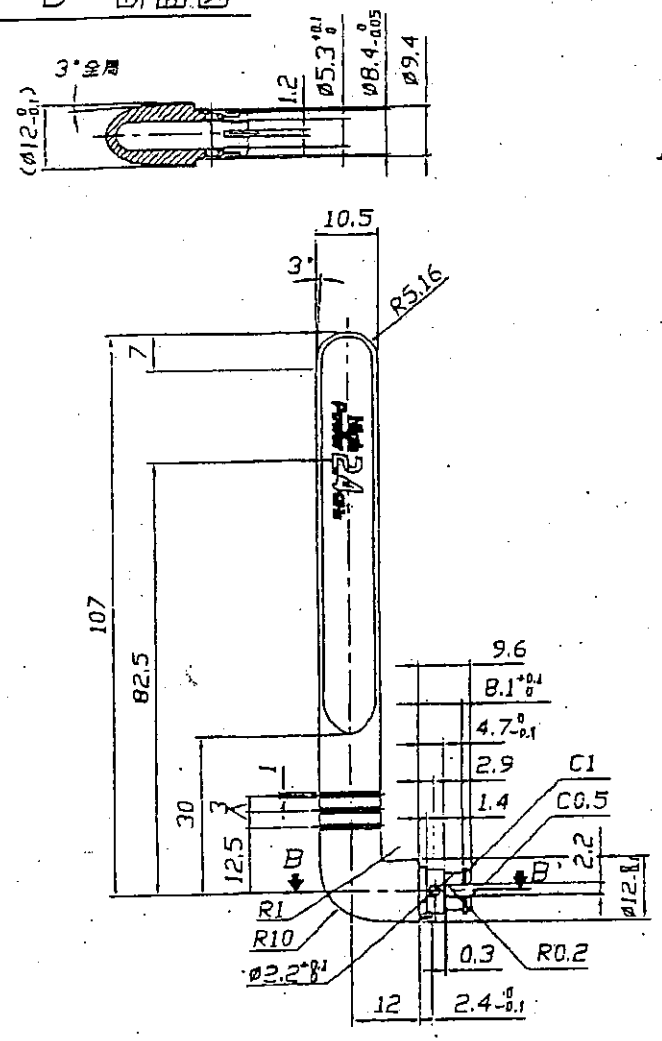

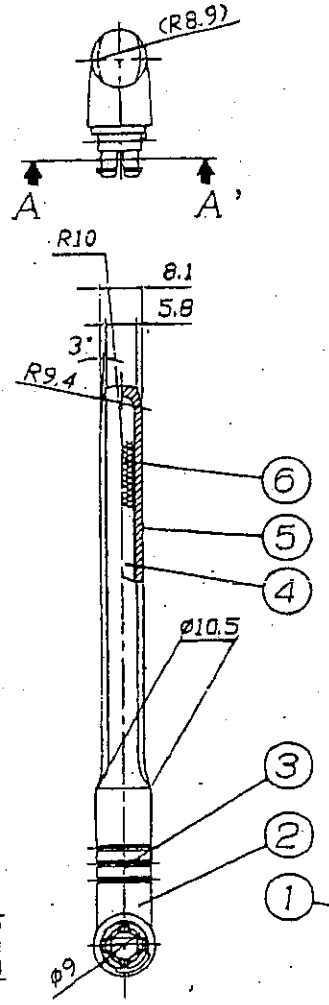

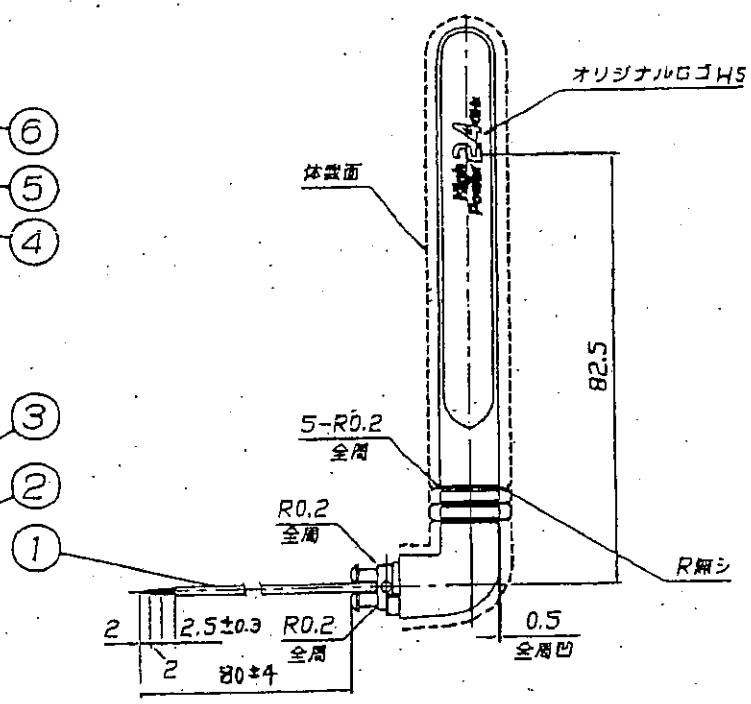

A－A' 断面図
(S=2/1)

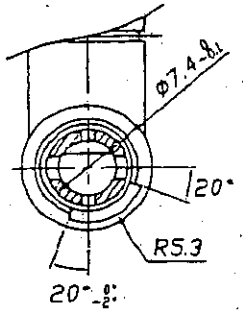

出図
'00.9.12
三省電機 社

注記）
1、適用仕様書は、ANT－S－426 とする。
2、キャビティ面は体裁面とし、型シボ HN－3000－G（日本エッチング）のこと。
3）体裁面にひけ、ワエルド、バリ、キズ、汚れ等の無きこと。
4）色調：色見本による。（DIC2401相当）（ブルー）

指定なき許容差		符号	名称	個数	材質	処理	関連仕様
		6	スペーサー	1	ナムスポンジ		
角度公差	±3°	5	カバー	1	PC		
100以上	±0.8	4	エレメント	1	ガラスエポキシキガン		
50をこえ100未満	±0.5	3	ホルダー	1	PC		
5をこえ50未満	±0.3	2	エレメントホルダー（内蔵）	1	POM		
5以下	±0.2	1	同軸ケーブル	1			日立電線(株)又は日立電線(株)製

改番	記号	要旨	年月日	氏名	投影法	単位	尺度	製品名	ANTEP－02330
						mm	1/1	図名	製品図
					承認	確認	設計	図番	C00S0721
					技術 04.7.15		技術 00.7.21 岩田		

Appendix C

The antenna of the device is screwed inside the device, the user can not remove it freely without any tools from outside the device. This is comply with the FCC rules part 15.203

Appendix D

Security Code

Description of 2.4GHz Direct Spectrum Cordless Phone

The subject device's 20 independent channels, autoscan at link establishment and smart channel hopping combine to find the clearest channels at all times, automatically.
Spread spectrum technology ensures the highest level of security available in a cordless phone.

The spread spectrum technique provides better security than other solutionssince only the receiver has a copy of the pre-assigned spreading code, making interception virtually impossible. The transmitting signal diluted over a large bandwidth with power density at any point being very light, so the signal goes unnoticed by other systems since they are not tuned to receive it. Moreover the scrambling code changes every 8 times the phone is parked, and there are millions of codes.

Scrambler / Descrambler A16-code randomizes the voice and supervisory data for trainsmission and reception, more than 64K scramble codes are available from the 16-bit maximal length pseudo-noise sequence generator.

Spread Spectrum Spreader each transmitted bit is multiplied with a 12-chip spreading code, meeting FCC Part 15.247 requirements.