FCC SAR Test Report

APPLICANT	:	Sony Corporation
EQUIPMENT	:	Personal Computer
BRAND NAME	:	SONY
MODEL NAME	:	SVF15NB1GL
FCC ID	:	AK8SVF15NB1GL
STANDARD	:	FCC 47 CFR Part 2 (2.1093) ANSI/IEEE C95.1-1992 IEEE 1528-2003

The product was completely tested on Oct. 03, 2013. We, SPORTON INTERNATIONAL INC., would like to declare that the tested sample has been evaluated in accordance with the procedures and shown the compliance with the applicable technical standards.

The test results in this report apply exclusively to the tested model / sample. Without written approval of SPORTON INTERNATIONAL INC., the test report shall not be reproduced except in full.

Reviewed by: Eric Huang / Deputy Manager

Approved by: Jones Tsai / Manager

Testing Laboratory
1190

SPORTON INTERNATIONAL INC.
No. 52, Hwa Ya 1st Rd., Hwa Ya Technology Park, Kwei-Shan Hsiang, Tao Yuan Hsien, Taiwan, R.O.C.

Table of Contents

1. Statement of Compliance **4**
2. Administration Data **5**
2.1 Testing Laboratory 5
2.2 Applicant 5
2.3 Manufacturer 5
2.4 Application Details 5
3. General Information **6**
3.1 Description of Equipment Under Test (EUT) 6
3.2 Maximum RF output power among production units 6
3.3 Applied Standard 7
3.4 Device Category and SAR Limits 7
3.5 Test Conditions 7
4. Specific Absorption Rate (SAR) **8**
4.1 Introduction 8
4.2 SAR Definition 8
5. SAR Measurement System **9**
5.1 E-Field Probe 10
5.2 Data Acquisition Electronics (DAE) 10
5.3 Robot 11
5.4 Measurement Server 11
5.5 Phantom 12
5.6 Device Holder 13
5.7 Data Storage and Evaluation 14
5.8 Test Equipment List 16
6. Tissue Simulating Liquids **17**
7. System Verification Procedures **19**
7.1 Purpose of System Performance check 19
7.2 System Setup 19
7.3 SAR System Verification Results 20
8. EUT Testing Position **21**
9. Measurement Procedures **21**
9.1 Spatial Peak SAR Evaluation 21
9.2 Power Reference Measurement 22
9.3 Area & Zoom Scan Procedures 22
9.4 Volume Scan Procedures 23
9.5 SAR Averaged Methods 23
9.6 Power Drift Monitoring 23
10. Conducted RF Output Power (Unit: dBm) **24**
11. Antenna Location **27**
12. SAR Test Results **30**
12.1 Body SAR 30
12.2 Highest SAR Plot 31
13. Simultaneous Transmission Analysis **32**
13.1 Body Exposure Conditions 33
14. Uncertainty Assessment **34**
15. References **36**
Appendix A. Plots of System Performance Check
Appendix B. Plots of SAR Measurement
Appendix C. DASY Calibration Certificate
Appendix D. Test Setup Photos

Revision History

REPORT NO.	VERSION	DESCRIPTION	ISSUED DATE
FA372656	Rev. 01	Initial issue of report	Oct. 11, 2013

1. Statement of Compliance

The maximum results of Specific Absorption Rate (SAR) found during testing for **Sony Corporation Personal Computer, SONY** are as follows.

<Highest SAR Summary>

Exposure Position	Frequency Band	Equipment Class	Highest Reported 1g-SAR (W/kg)
Body (Separation 0cm)	WLAN 2.4GHz Band	DTS	0.82

<Highest Simultaneous transmission SAR>

Frequency Band	Equipment Class	Exposure Position	Highest Reported Simultaneous Transmission 1g-SAR (W/kg)
Bluetooth	DSS	Body	0.98
WLAN 2.4GHz Band	DTS		

This device is in compliance with Specific Absorption Rate (SAR) for general population/uncontrolled exposure limits (1.6 W/kg) specified in FCC 47 CFR part 2 (2.1093) and ANSI/IEEE C95.1-1992, and had been tested in accordance with the measurement methods and procedures specified in IEEE 1528-2003.

2. Administration Data

2.1 Testing Laboratory

Test Site	SPORTON INTERNATIONAL INC.
Test Site Location	No. 52, Hwa Ya 1st Rd., Hwa Ya Technology Park, Kwei-Shan Hsiang, Tao Yuan Hsien, Taiwan, R.O.C. TEL: +886-3-327-3456 FAX: +886-3-328-4978

2.2 Applicant

Company Name	Sony Corporation
Address	1-7-1 Konan, Minato-ku, Tokyo 108-0075, Japan

2.3 Manufacturer

Company Name	Sony Corporation
Address	1-7-1 Konan, Minato-ku, Tokyo 108-0075, Japan

2.4 Application Details

Date of Start during the Test	Oct. 03, 2013
Date of End during the Test	Oct. 03, 2013

3. General Information

3.1 Description of Equipment Under Test (EUT)

Product Feature & Specification	
EUT	Personal Computer
Brand Name	SONY
Model Name	SVF15NB1GL
FCC ID	AK8SVF15NB1GL
Wireless Technology and Frequency Range	WLAN 2.4GHz Band: 2412 MHz ~ 2462 MHz Bluetooth: 2402 MHz ~ 2480 MHz NFC : 13.56 MHz
Mode	• 802.11b/g/n HT20/HT40 • Bluetooth v2.1+EDR， Bluetooth v4.0+LE • NFC:ASK
Antenna Type	WLAN: PIFA Antenna Bluetooth: PIFA Antenna NFC: Loop Antenna
EUT Stage	Identical Prototype
Remark: 1. The above EUT's information was declared by manufacturer. Please refer to the specifications or user's manual for more detailed description.	

3.2 Maximum RF output power among production units

Band / Frequency (MHz)		IEEE 802.11 Average Power (dBm)									
		Ant A				Ant B				Ant A+B	
		11b	11g	HT20	HT40	11b	11g	HT20	HT40	HT20	HT40
2.4GHz Band	2412	14	12	12		12.5	10.5	10.5		10.5	
	2422				10.5				8.5		7
	2437	14	15	15	15	12.5	14	14	12	12	11.5
	2452				11.5				11.5		10.5
	2462	14	12	12		12.5	12	12		11.5	

Mode / Band	Bluetooth			
	1Mbps	2Mbps	3Mbps	BT4.0-LE
	(GFSK)	π/4-DQPSK	(8-DPSK)	(GFSK)
2.4GHz Bluetooth	6	5	3	6

3.3 Applied Standard

The Specific Absorption Rate (SAR) testing specification, method, and procedure for this device is in accordance with the following standards:

- FCC 47 CFR Part 2 (2.1093)
- ANSI/IEEE C95.1-1992
- IEEE 1528-2003
- FCC KDB 865664 D01 v01r01
- FCC KDB 447498 D01 v05r01
- FCC KDB 248227 D01 v01r02
- FCC KDB 616217 D04 v01r01

3.4 Device Category and SAR Limits

This device belongs to portable device category because its radiating structure is allowed to be used within 20 centimeters of the body of the user. Limit for General Population/Uncontrolled exposure should be applied for this device, it is 1.6 W/kg as averaged over any 1 gram of tissue.

3.5 Test Conditions

3.5.1 Ambient Condition

Ambient Temperature	20 to 24 ℃
Humidity	< 60 %

3.5.2 Test Configuration

For WLAN SAR testing, WLAN engineering testing software installed on the EUT can provide continuous transmitting RF signal.

4. Specific Absorption Rate (SAR)

4.1 Introduction

SAR is related to the rate at which energy is absorbed per unit mass in an object exposed to a radio field. The SAR distribution in a biological body is complicated and is usually carried out by experimental techniques or numerical modeling. The standard recommends limits for two tiers of groups, occupational/controlled and general population/uncontrolled, based on a person's awareness and ability to exercise control over his or her exposure. In general, occupational/controlled exposure limits are higher than the limits for general population/uncontrolled.

4.2 SAR Definition

The SAR definition is the time derivative (rate) of the incremental energy (dW) absorbed by (dissipated in) an incremental mass (dm) contained in a volume element (dv) of a given density (ρ). The equation description is as below:

$$\mathbf{SAR} = \frac{\mathbf{d}}{\mathbf{dt}}\left(\frac{\mathbf{dW}}{\mathbf{dm}}\right) = \frac{\mathbf{d}}{\mathbf{dt}}\left(\frac{\mathbf{dW}}{\boldsymbol{\rho}\mathbf{dv}}\right)$$

SAR is expressed in units of Watts per kilogram (W/kg)

SAR measurement can be either related to the temperature elevation in tissue by

$$\mathbf{SAR} = \mathbf{C}\left(\frac{\boldsymbol{\delta}\mathbf{T}}{\boldsymbol{\delta}\mathbf{t}}\right)$$

Where: C is the specific heat capacity, δT is the temperature rise and δt is the exposure duration, or related to the electrical field in the tissue by

$$\mathbf{SAR} = \frac{\boldsymbol{\sigma}|\mathbf{E}|^2}{\boldsymbol{\rho}}$$

Where: σ is the conductivity of the tissue, ρ is the mass density of the tissue and E is the RMS electrical field strength.

However for evaluating SAR of low power transmitter, electrical field measurement is typically applied.

5. SAR Measurement System

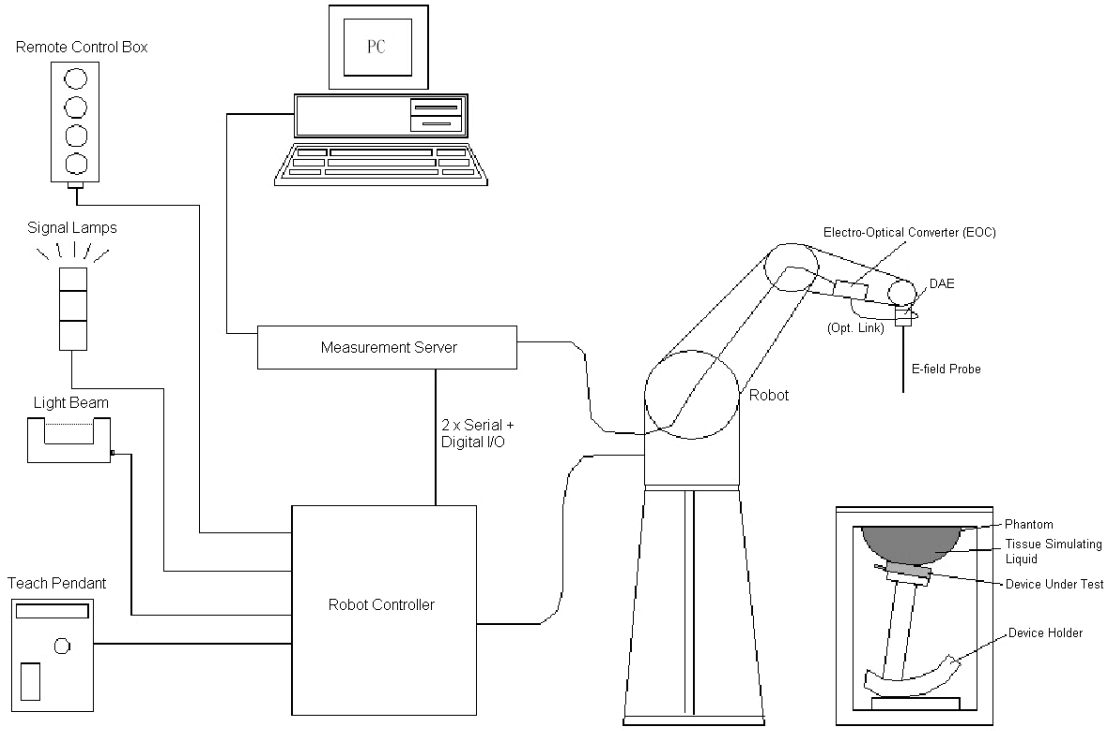

Fig 5.1 SPEAG DASY System Configurations

The DASY system for performance compliance tests is illustrated above graphically. This system consists of the following items:

- A standard high precision 6-axis robot with controller, a teach pendant and software
- A data acquisition electronic (DAE) attached to the robot arm extension
- A dosimetric probe equipped with an optical surface detector system
- The electro-optical converter (EOC) performs the conversion between optical and electrical signals
- A measurement server performs the time critical tasks such as signal filtering, control of the robot operation and fast movement interrupts.
- A probe alignment unit which improves the accuracy of the probe positioning
- A computer operating Windows XP
- DASY software
- Remove control with teach pendant and additional circuitry for robot safety such as warming lamps, etc.
- The SAM twin phantom
- A device holder
- Tissue simulating liquid
- Dipole for evaluating the proper functioning of the system

Component details are described in in the following sub-sections.

5.1 E-Field Probe

The SAR measurement is conducted with the dosimetric probe (manufactured by SPEAG).The probe is specially designed and calibrated for use in liquid with high permittivity. The dosimetric probe has special calibration in liquid at different frequency. This probe has a built in optical surface detection system to prevent from collision with phantom.

5.1.1 E-Field Probe Specification

<ES3DV3 Probe >

Construction	Symmetrical design with triangular core Built-in optical fiber for surface detection system. Built-in shielding against static charges. PEEK enclosure material (resistant to organic solvents, e.g., DGBE)
Frequency	10 MHz to 3 GHz; Linearity: ± 0.2 dB
Directivity	± 0.2 dB in HSL (rotation around probe axis) ± 0.4 dB in HSL (rotation normal to probe axis)
Dynamic Range	5 µW/g to 100 mW/g; Linearity: ± 0.2 dB
Dimensions	Overall length: 337 mm (Tip: 10 mm) Tip diameter: 4 mm (Body: 10 mm) Distance from probe tip to dipole centers: 3 mm

Fig 5.2 Photo of ES3DV3

5.1.2 E-Field Probe Calibration

Each probe needs to be calibrated according to a dosimetric assessment procedure with accuracy better than ± 10%. The spherical isotropy shall be evaluated and within ± 0.25dB. The sensitivity parameters (NormX, NormY, and NormZ), the diode compression parameter (DCP) and the conversion factor (ConvF) of the probe are tested. The calibration data can be referred to appendix C of this report.

5.2 Data Acquisition Electronics (DAE)

The data acquisition electronics (DAE) consists of a highly sensitive electrometer-grade preamplifier with auto-zeroing, a channel and gain-switching multiplexer, a fast 16 bit AD-converter and a command decoder and control logic unit. Transmission to the measurement server is accomplished through an optical downlink for data and status information as well as an optical uplink for commands and the clock.
The input impedance of the DAE is 200 MOhm; the inputs are symmetrical and floating. Common mode rejection is above 80 dB.

Fig 5.3 Photo of DAE

5.3 Robot

The SPEAG DASY system uses the high precision robots (DASY4: RX90BL; DASY5: TX90XL) type from Stäubli SA (France). For the 6-axis controller system, the robot controller version (DASY4: CS7MB; DASY5: CS8c) from Stäubli is used. The Stäubli robot series have many features that are important for our application:

- High precision (repeatability ±0.035 mm)
- High reliability (industrial design)
- Jerk-free straight movements
- Low ELF interference (the closed metallic construction shields against motor control fields)

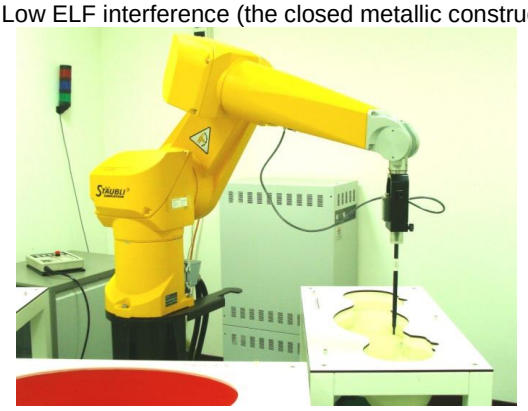

Fig 5.4 Photo of DASY4

Fig 5.5 Photo of DASY5

5.4 Measurement Server

The measurement server is based on a PC/104 CPU board with CPU (DASY4: 166 MHz, Intel Pentium; DASY5: 400 MHz, Intel Celeron), chipdisk (DASY4: 32 MB; DASY5: 128 MB), RAM (DASY4: 64 MB, DASY5: 128 MB). The necessary circuits for communication with the DAE electronic box, as well as the 16 bit AD converter system for optical detection and digital I/O interface are contained on the DASY I/O board, which is directly connected to the PC/104 bus of the CPU board.

The measurement server performs all the real-time data evaluation for field measurements and surface detection, controls robot movements and handles safety operations.

Fig 5.6 Photo of Server for DASY4

Fig 5.7 Photo of Server for DASY5

5.5 Phantom

<SAM Twin Phantom>

Shell Thickness	2 ± 0.2 mm; Center ear point: 6 ± 0.2 mm	 **Fig 5.8 Photo of SAM Phantom**
Filling Volume	Approx. 25 liters	
Dimensions	Length: 1000 mm; Width: 500 mm; Height: adjustable feet	
Measurement Areas	Left Hand, Right Hand, Flat Phantom	

The bottom plate contains three pair of bolts for locking the device holder. The device holder positions are adjusted to the standard measurement positions in the three sections. A white cover is provided to tap the phantom during off-periods to prevent water evaporation and changes in the liquid parameters. On the phantom top, three reference markers are provided to identify the phantom position with respect to the robot.

<ELI4 Phantom>

Shell Thickness	2 ± 0.2 mm (sagging: <1%)	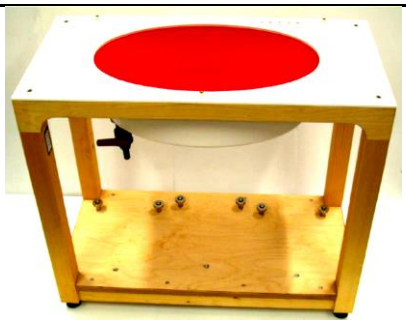 **Fig 5.9 Photo of ELI4 Phantom**
Filling Volume	Approx. 30 liters	
Dimensions	Major ellipse axis: 600 mm Minor axis: 400 mm	

The ELI4 phantom is intended for compliance testing of handheld and body-mounted wireless devices in the frequency range of 30 MHz to 6 GHz. ELI4 is fully compatible with standard and all known tissue simulating liquids.

5.6 Device Holder

<Device Holder for SAM Twin Phantom>

The SAR in the phantom is approximately inversely proportional to the square of the distance between the source and the liquid surface. For a source at 5 mm distance, a positioning uncertainty of ± 0.5 mm would produce a SAR uncertainty of ± 20 %. Accurate device positioning is therefore crucial for accurate and repeatable measurements. The positions in which the devices must be measured are defined by the standards.

The DASY device holder is designed to cope with different positions given in the standard. It has two scales for the device rotation (with respect to the body axis) and the device inclination (with respect to the line between the ear reference points). The rotation center for both scales is the ear reference point (ERP). Thus the device needs no repositioning when changing the angles.

The DASY device holder is constructed of low-loss POM material having the following dielectric parameters: relative permittivity ε = 3 and loss tangent δ = 0.02. The amount of dielectric material has been reduced in the closest vicinity of the device, since measurements have suggested that the influence of the clamp on the test results could thus be lowered.

Fig 5.10 Device Holder

<Laptop Extension Kit>

The extension is lightweight and made of POM, acrylic glass and foam. It fits easily on the upper part of the mounting device in place of the phone positioned. The extension is fully compatible with the SAM Twin and ELI phantoms.

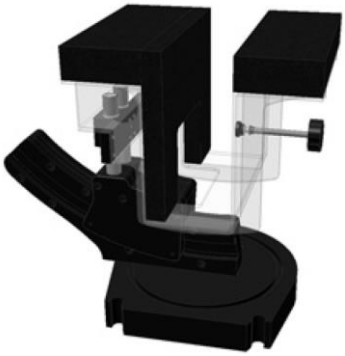

Fig 5.11 Laptop Extension Kit

5.7 Data Storage and Evaluation

5.7.1 Data Storage

The DASY software stores the assessed data from the data acquisition electronics as raw data (in microvolt readings from the probe sensors), together with all the necessary software parameters for the data evaluation (probe calibration data, liquid parameters and device frequency and modulation data) in measurement files. The post-processing software evaluates the desired unit and format for output each time the data is visualized or exported. This allows verification of the complete software setup even after the measurement and allows correction of erroneous parameter settings. For example, if a measurement has been performed with an incorrect crest factor parameter in the device setup, the parameter can be corrected afterwards and the data can be reevaluated.

The measured data can be visualized or exported in different units or formats, depending on the selected probe type (e.g., [V/m], [A/m], [mW/g]). Some of these units are not available in certain situations or give meaningless results, e.g., a SAR-output in a non-lose media, will always be zero. Raw data can also be exported to perform the evaluation with other software packages.

5.7.2 Data Evaluation

The DASY post-processing software (SEMCAD) automatically executes the following procedures to calculate the field units from the microvolt readings at the probe connector. The parameters used in the evaluation are stored in the configuration modules of the software：

Probe parameters：	- Sensitivity	$Norm_i$, a_{i0}, a_{i1}, a_{i2}
	- Conversion factor	$ConvF_i$
	- Diode compression point	dcp_i
Device parameters：	- Frequency	f
	- Crest factor	cf
Media parameters：	- Conductivity	σ
	- Density	ρ

These parameters must be set correctly in the software. They can be found in the component documents or they can be imported into the software from the configuration files issued for the DASY components. In the direct measuring mode of the multi-meter option, the parameters of the actual system setup are used. In the scan visualization and export modes, the parameters stored in the corresponding document files are used.

The first step of the evaluation is a linearization of the filtered input signal to account for the compression characteristics of the detector diode. The compensation depends on the input signal, the diode type and the DC-transmission factor from the diode to the evaluation electronics. If the exciting field is pulsed, the crest factor of the signal must be known to correctly compensate for peak power.

The formula for each channel can be given as：

$$\mathbf{V_i = U_i + U_i^2 \cdot \frac{cf}{dcp_i}}$$

with V_i = compensated signal of channel i, (i = x, y, z)
U_i = input signal of channel i, (i = x, y, z)
cf = crest factor of exciting field (DASY parameter)
dcp_i = diode compression point (DASY parameter)

From the compensated input signals, the primary field data for each channel can be evaluated：

E-field Probes：$\mathbf{E_i = \sqrt{\frac{V_i}{Norm_i \cdot ConvF}}}$

H-field Probes：$\mathbf{H_i = \sqrt{V_i} \cdot \frac{a_{i0}+a_{i1}f+a_{i2}f^2}{f}}$

with V_i = compensated signal of channel i, (i = x, y, z)
$Norm_i$ = sensor sensitivity of channel i, (i = x, y, z), μV/(V/m)^2 for E-field Probes
ConvF = sensitivity enhancement in solution
a_{ij} = sensor sensitivity factors for H-field probes
f = carrier frequency [GHz]
E_i = electric field strength of channel i in V/m
H_i = magnetic field strength of channel i in A/m

The RSS value of the field components gives the total field strength (Hermitian magnitude)：

$$\mathbf{E_{tot} = \sqrt{E_x^2 + E_y^2 + E_z^2}}$$

The primary field data are used to calculate the derived field units.

$$\mathbf{SAR = E_{tot}^2 \cdot \frac{\sigma}{\rho \cdot 1000}}$$

with SAR = local specific absorption rate in mW/g
E_{tot} = total field strength in V/m
σ = conductivity in [mho/m] or [Siemens/m]
ρ = equivalent tissue density in g/cm^3

Note that the density is set to 1, to account for actual head tissue density rather than the density of the tissue simulating liquid.

5.8 Test Equipment List

Manufacturer	Name of Equipment	Type/Model	Serial Number	Calibration	
				Last Cal.	Due Date
SPEAG	2450MHz System Validation Kit	D2450V2	736	Aug. 23, 2013	Aug. 22, 2014
SPEAG	Data Acquisition Electronics	DAE4	1279	Jan. 28, 2013	Jan. 27, 2014
SPEAG	Dosimetric E-Field Probe	ES3DV3	3071	Jun. 18, 2013	Jun. 17, 2014
Wisewind	Thermometer	HTC-1	TM281	Nov. 13, 2012	Nov. 12, 2013
SPEAG	Device Holder	N/A	N/A	NCR	NCR
Agilent	ESG Vector Series Signal Generator	E4438C	MY49070755	Oct. 02, 2012	Oct. 01, 2013
SPEAG	Dielectric Probe Kit	DAK-3.5	1126	Jul. 23, 2013	Jul. 22, 2014
Agilent	ENA Network Analyzer	E5071C	MY46316648	Feb. 07, 2013	Feb. 06, 2014
Anritsu	Power Meter	ML2495A	1218006	Oct. 22, 2012	Oct. 21, 2013
Anritsu	Power Sensor	MA2411B	1207363	Oct. 24, 2012	Oct. 23, 2013
Agilent	Dual Directional Coupler	778D	50422	Note 2	
Woken	Attenuator 1	WK0602-XX	N/A	Note 2	
PE	Attenuator 2	PE7005-10	N/A	Note 2	
PE	Attenuator 3	PE7005- 3	N/A	Note 2	
AR	Power Amplifier	5S1G4M2	328767	Note 3	
R&S	Spectrum Analyzer	FSP 7	101131	Jul. 09, 2013	Jul. 08, 2014

Table 5.1 Test Equipment List

Note:

1. The calibration certificate of DASY can be referred to appendix C of this report.
2. The Insertion Loss calibration of Dual Directional Coupler and Attenuator were characterized via the network analyzer and compensated during system check.
3. In system check we need to monitor the level on the power meter, and adjust the power amplifier level to have precise power level to the dipole; the measured SAR will be normalized to 1W input power according to the ratio of 1W to the input power to the dipole. For system check, the calibration of the power amplifier is deemed not critically required for correct measurement; the power meter is critical and we do have calibration for it
4. Attenuator 1 insertion loss is calibrated by the network Analyzer, which the calibration is valid, before system check.

6. Tissue Simulating Liquids

For the measurement of the field distribution inside the SAM phantom with DASY, the phantom must be filled with around 25 liters of homogeneous body tissue simulating liquid. For head SAR testing, the liquid height from the ear reference point (ERP) of the phantom to the liquid top surface is larger than 15 cm, which is shown in Fig. 6.1. For body SAR testing, the liquid height from the center of the flat phantom to the liquid top surface is larger than 15 cm, which is shown in Fig. 6.2.

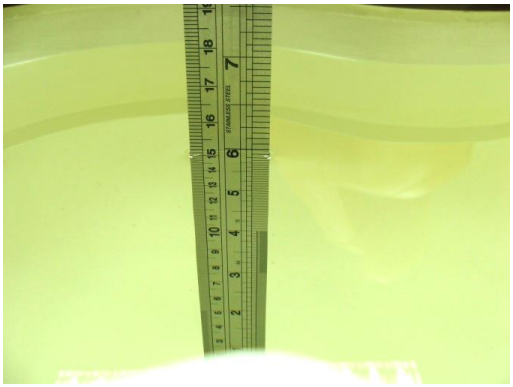

Fig 6.1 Photo of Liquid Height for Head SAR

Fig 6.2 Photo of Liquid Height for Body SAR

The following table gives the recipes for tissue simulating liquid.

Frequency (MHz)	Water (%)	Sugar (%)	Cellulose (%)	Salt (%)	Preventol (%)	DGBE (%)	Conductivity (σ)	Permittivity (ε_r)
For Head								
750	41.1	57.0	0.2	1.4	0.2	0	0.89	41.9
835	40.3	57.9	0.2	1.4	0.2	0	0.90	41.5
900	40.3	57.9	0.2	1.4	0.2	0	0.97	41.5
1800, 1900, 2000	55.2	0	0	0.3	0	44.5	1.40	40.0
2450	55.0	0	0	0	0	45.0	1.80	39.2
For Body								
750	51.7	47.2	0	0.9	0.1	0	0.96	55.5
835	50.8	48.2	0	0.9	0.1	0	0.97	55.2
900	50.8	48.2	0	0.9	0.1	0	1.05	55.0
1800, 1900, 2000	70.2	0	0	0.4	0	29.4	1.52	53.3
2450	68.6	0	0	0	0	31.4	1.95	52.7

Table 6.1 Recipes of Tissue Simulating Liquid

Simulating Liquid for 5G, Manufactured by SPEAG

Ingredients	(% by weight)
Water	64~78%
Mineral oil	11~18%
Emulsifiers	9~15%
Additives and Salt	2~3%

The dielectric parameters of the liquids were verified prior to the SAR evaluation using an SPEAG DAK-3.5 Dielectric Probe Kit and an Agilent Network Analyzer.

The following table shows the measuring results for simulating liquid.

Frequency (MHz)	Liquid Type	Liquid Temp. (℃)	Conductivity (σ)	Permittivity (ε_r)	Conductivity Target (σ)	Permittivity Target (ε_r)	Delta (σ) (%)	Delta (ε_r) (%)	Limit (%)	Date
2450	Body	22.6	2.02	53.936	1.95	52.70	3.59	2.35	±5	Oct. 03, 2013

Table 6.2 Measuring Results for Simulating Liquid

7. System Verification Procedures

Each DASY system is equipped with one or more system validation kits. These units, together with the predefined measurement procedures within the DASY software, enable the user to conduct the system performance check and system validation. System validation kit includes a dipole, tripod holder to fix it underneath the flat phantom and a corresponding distance holder.

7.1 Purpose of System Performance check

The system performance check verifies that the system operates within its specifications. System and operator errors can be detected and corrected. It is recommended that the system performance check be performed prior to any usage of the system in order to guarantee reproducible results. The system performance check uses normal SAR measurements in a simplified setup with a well characterized source. This setup was selected to give a high sensitivity to all parameters that might fail or vary over time. The system check does not intend to replace the calibration of the components, but indicates situations where the system uncertainty is exceeded due to drift or failure.

7.2 System Setup

In the simplified setup for system evaluation, the EUT is replaced by a calibrated dipole and the power source is replaced by a continuous wave that comes from a signal generator. The calibrated dipole must be placed beneath the flat phantom section of the SAM twin phantom with the correct distance holder. The distance holder should touch the phantom surface with a light pressure at the reference marking and be oriented parallel to the long side of the phantom. The equipment setup is shown below:

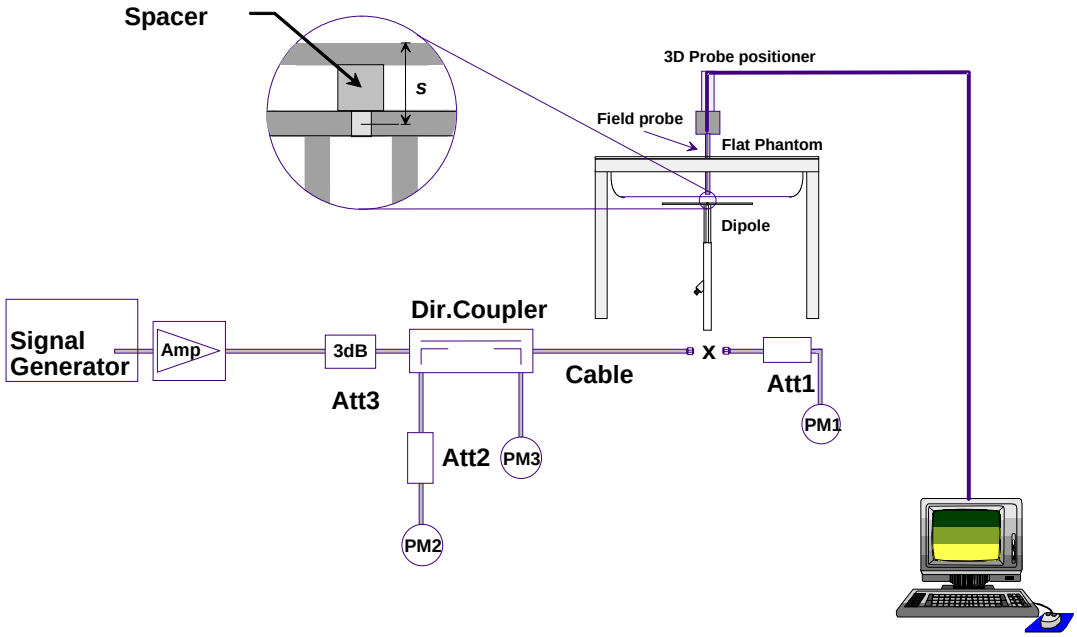

Fig 7.1 System Setup for System Evaluation

1. Signal Generator
2. Amplifier
3. Directional Coupler
4. Power Meter
5. Calibrated Dipole

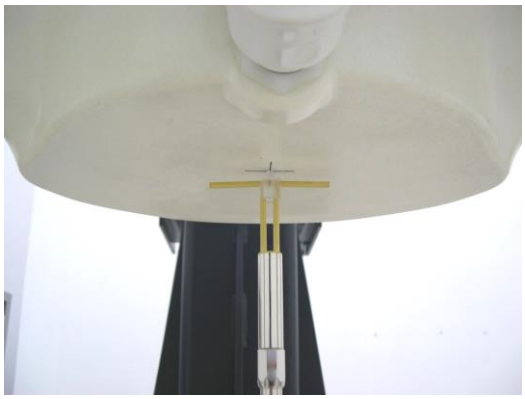

Fig 7.2 Photo of Dipole Setup

7.3 SAR System Verification Results

Comparing to the original SAR value provided by SPEAG, the verification data should be within its specification of 10 %. Table 7.1 shows the target SAR and measured SAR after normalized to 1W input power. The table below indicates the system performance check can meet the variation criterion and the plots can be referred to Appendix A of this report.

Date	Frequency (MHz)2	Liquid Type	Power fed onto reference dipole (mW)	Targeted SAR (W/kg)	Measured SAR (W/kg)	Normalized SAR (W/kg)	Deviation (%)
Oct. 03, 2013	2450	Body	250	51.3	13.1	52.4	2.14

Table 7.1 Target and Measurement SAR after Normalized

8. EUT Testing Position

Please refer to Appendix D for the test setup photos.

9. Measurement Procedures

The measurement procedures are as follows:

<Conducted power measurement>

(a) For WWAN power measurement, use base station simulator to configure EUT WWAN transmission in conducted connection with RF cable, at maximum power in each supported wireless interface and frequency band.
(b) Read the WWAN RF power level from the base station simulator.
(c) For WLAN/BT power measurement, use engineering software to configure EUT WLAN/BT continuously transmission, at maximum RF power in each supported wireless interface and frequency band
(d) Connect EUT RF port through RF cable to the power meter, and measure WLAN/BT output power

<SAR measurement>

(a) Use base station simulator to configure EUT WWAN transmission in radiated connection, and engineering software to configure EUT WLAN/BT continuously transmission, at maximum RF power, in the highest power channel.
(b) Place the EUT in the positions as Appendix D demonstrates.
(c) Set scan area, grid size and other setting on the DASY software.
(d) Measure SAR results for the highest power channel on each testing position.
(e) Find out the largest SAR result on these testing positions of each band
(f) Measure SAR results for other channels in worst SAR testing position if the reported SAR of highest power channel is larger than 0.8 W/kg

According to the test standard, the recommended procedure for assessing the peak spatial-average SAR value consists of the following steps:

(a) Power reference measurement
(b) Area scan
(c) Zoom scan
(d) Power drift measurement

9.1 Spatial Peak SAR Evaluation

The procedure for spatial peak SAR evaluation has been implemented according to the test standard. It can be conducted for 1g and 10g, as well as for user-specific masses. The DASY software includes all numerical procedures necessary to evaluate the spatial peak SAR value.

The base for the evaluation is a "cube" measurement. The measured volume must include the 1g and 10g cubes with the highest averaged SAR values. For that purpose, the center of the measured volume is aligned to the interpolated peak SAR value of a previously performed area scan.

The entire evaluation of the spatial peak values is performed within the post-processing engine (SEMCAD). The system always gives the maximum values for the 1g and 10g cubes. The algorithm to find the cube with highest averaged SAR is divided into the following stages:

(a) Extraction of the measured data (grid and values) from the Zoom Scan
(b) Calculation of the SAR value at every measurement point based on all stored data (A/D values and measurement parameters)
(c) Generation of a high-resolution mesh within the measured volume
(d) Interpolation of all measured values form the measurement grid to the high-resolution grid
(e) Extrapolation of the entire 3-D field distribution to the phantom surface over the distance from sensor to surface
(f) Calculation of the averaged SAR within masses of 1g and 10g

9.2 Power Reference Measurement

The Power Reference Measurement and Power Drift Measurements are for monitoring the power drift of the device under test in the batch process. The minimum distance of probe sensors to surface determines the closest measurement point to phantom surface. This distance cannot be smaller than the distance of sensor calibration points to probe tip as defined in the probe properties.

9.3 Area & Zoom Scan Procedures

First Area Scan is used to locate the approximate location(s) of the local peak SAR value(s). The measurement grid within an Area Scan is defined by the grid extent, grid step size and grid offset. Next, in order to determine the EM field distribution in a three-dimensional spatial extension, Zoom Scan is required. The Zoom Scan is performed around the highest E-field value to determine the averaged SAR-distribution over 10 g. Area scan and zoom scan resolution setting follows KDB 865664 D01v01r01 quoted below.

When the 1-g SAR of the highest peak is within 2 dB of the SAR limit, additional zoom scans are required for other peaks within 2 dB of the highest peak that have not been included in any zoom scan to ensure there is no increase in SAR.

			≤ 3 GHz	> 3 GHz
Maximum distance from closest measurement point (geometric center of probe sensors) to phantom surface			5 ± 1 mm	½·δ·ln(2) ± 0.5 mm
Maximum probe angle from probe axis to phantom surface normal at the measurement location			30° ± 1°	20° ± 1°
Maximum area scan spatial resolution: Δx_{Area}, Δy_{Area}			≤ 2 GHz: ≤ 15 mm 2 – 3 GHz: ≤ 12 mm	3 – 4 GHz: ≤ 12 mm 4 – 6 GHz: ≤ 10 mm
			When the x or y dimension of the test device, in the measurement plane orientation, is smaller than the above, the measurement resolution must be ≤ the corresponding x or y dimension of the test device with at least one measurement point on the test device.	
Maximum zoom scan spatial resolution: Δx_{Zoom}, Δy_{Zoom}			≤ 2 GHz: ≤ 8 mm 2 – 3 GHz: ≤ 5 mm*	3 – 4 GHz: ≤ 5 mm* 4 – 6 GHz: ≤ 4 mm*
Maximum zoom scan spatial resolution, normal to phantom surface	uniform grid: $\Delta z_{Zoom}(n)$		≤ 5 mm	3 – 4 GHz: ≤ 4 mm 4 – 5 GHz: ≤ 3 mm 5 – 6 GHz: ≤ 2 mm
	graded grid	$\Delta z_{Zoom}(1)$: between 1st two points closest to phantom surface	≤ 4 mm	3 – 4 GHz: ≤ 3 mm 4 – 5 GHz: ≤ 2.5 mm 5 – 6 GHz: ≤ 2 mm
		$\Delta z_{Zoom}(n>1)$: between subsequent points	$\leq 1.5 \cdot \Delta z_{Zoom}(n-1)$	
Minimum zoom scan volume	x, y, z		≥ 30 mm	3 – 4 GHz: ≥ 28 mm 4 – 5 GHz: ≥ 25 mm 5 – 6 GHz: ≥ 22 mm

Note: δ is the penetration depth of a plane-wave at normal incidence to the tissue medium; see draft standard IEEE P1528-2011 for details.

* When zoom scan is required and the *reported* SAR from the area scan based *1-g SAR estimation* procedures of KDB 447498 is ≤ 1.4 W/kg, ≤ 8 mm, ≤ 7 mm and ≤ 5 mm zoom scan resolution may be applied, respectively, for 2 GHz to 3 GHz, 3 GHz to 4 GHz and 4 GHz to 6 GHz.

9.4 Volume Scan Procedures

The volume scan is used for assess overlapping SAR distributions for antennas transmitting in different frequency bands. It is equivalent to an oversized zoom scan used in standalone measurements. The measurement volume will be used to enclose all the simultaneous transmitting antennas. For antennas transmitting simultaneously in different frequency bands, the volume scan is measured separately in each frequency band. In order to sum correctly to compute the 1g aggregate SAR, the EUT remain in the same test position for all measurements and all volume scan use the same spatial resolution and grid spacing. When all volume scan were completed, the software, SEMCAD postprocessor can combine and subsequently superpose these measurement data to calculating the multiband SAR.

9.5 SAR Averaged Methods

In DASY, the interpolation and extrapolation are both based on the modified Quadratic Shepard's method. The interpolation scheme combines a least-square fitted function method and a weighted average method which are the two basic types of computational interpolation and approximation.

Extrapolation routines are used to obtain SAR values between the lowest measurement points and the inner phantom surface. The extrapolation distance is determined by the surface detection distance and the probe sensor offset. The uncertainty increases with the extrapolation distance. To keep the uncertainty within 1% for the 1 g and 10 g cubes, the extrapolation distance should not be larger than 5 mm.

9.6 Power Drift Monitoring

All SAR testing is under the EUT install full charged battery and transmit maximum output power. In DASY measurement software, the power reference measurement and power drift measurement procedures are used for monitoring the power drift of EUT during SAR test. Both these procedures measure the field at a specified reference position before and after the SAR testing. The software will calculate the field difference in dB. If the power drifts more than 5%, the SAR will be retested.

10. Conducted RF Output Power (Unit: dBm)

<WLAN 2.4GHz Conducted Power>

Note:

1. This device supports SISO mode and MIMO mode configuration, when the single antenna RF power in SISO mode is larger or equal to the single antenna RF power in MIMO mode, and for RF exposure assessment of MIMO mode simultaneous transmission exclusion analysis was performed with SAR test results of each antenna in SISO mode

<Antenna 0>

Note:

1. Per KDB 248227 D01 v01r02, choose the highest output power channel to test SAR and determine further SAR exclusion
2. For each frequency band, testing at higher data rates and higher order modulations is not required when the maximum average output power for each of these configurations is less than 1/4dB higher than those measured at the lowest data rate
3. Per KDB 248227 D01 v01r02, 11g, 11n-HT20 and 11n-HT40 average output power is higher than 1/4dB higher than 11b mode, these modes SAR will be verified at the highest RF exposure position found in 802.11b SAR testing.

WLAN 2.4GHz 802.11b Average Power (dBm)							Tune up Limit (dBm)
Power vs. Channel			Power vs. Data Rate				
Channel	Frequency (MHz)	Data Rate 1Mbps	Channel	2Mbps	5.5Mbps	11Mbps	
CH 1	2412	13.91	CH 6	13.92	13.93	13.96	14.0
CH 6	2437	13.98					14.0
CH 11	2462	13.95					14.0

WLAN 2.4GHz 802.11g Average Power (dBm)											Tune up Limit (dBm)
Power vs. Channel			Power vs. Data Rate								
Channel	Frequency (MHz)	Data Rate 6Mbps	Channel	9Mbps	12Mbps	18Mbps	24Mbps	36Mbps	48Mbps	54Mbps	
CH 1	2412	11.93	CH 6	14.93	14.92	14.90	14.91	14.95	14.89	14.91	12.0
CH 6	2437	14.96									15.0
CH 11	2462	11.91									12.0

WLAN 2.4GHz 802.11n-HT20 Average Power (dBm)											Tune up Limit (dBm)
Power vs. Channel			Power vs. MCS Index								
Channel	Frequency (MHz)	MCS Index MCS0	Channel	MCS1	MCS2	MCS3	MCS4	MCS5	MCS6	MCS7	
CH 1	2412	11.89	CH 6	14.78	14.77	14.73	14.79	14.72	14.76	14.71	12.0
CH 6	2437	14.81									15.0
CH 11	2462	11.83									12.0

WLAN 2.4GHz 802.11n-HT40 Average Power (dBm)											Tune up Limit (dBm)
Power vs. Channel			Power vs. MCS Index								
Channel	Frequency (MHz)	MCS Index MCS0	Channel	MCS1	MCS2	MCS3	MCS4	MCS5	MCS6	MCS7	
CH 3	2422	10.44	CH 6	14.80	14.73	14.72	14.79	14.76	14.77	14.81	10.5
CH 6	2437	14.83									15.0
CH 9	2452	11.46									11.5

<Antenna 1>

Note:

1. Per KDB 248227 D01 v01r02, choose the highest output power channel to test SAR and determine further SAR exclusion
2. For each frequency band, testing at higher data rates and higher order modulations is not required when the maximum average output power for each of these configurations is less than 1/4dB higher than those measured at the lowest data rate
3. Apply the test exclusion rule in KDB 248227 D01 v01r02 11n-HT40 output power is less than 1/4dB higher than 11b mode, thus the SAR can be excluded.
4. Per KDB 248227 D01 v01r02, 11g and 11n-HT20 average output power is higher than 1/4dB higher than 11b mode, these modes SAR will be verified at the highest RF exposure position found in 802.11b SAR testing.

WLAN 2.4GHz 802.11b Average Power (dBm)							Tune up Limit (dBm)
Power vs. Channel			Power vs. Data Rate				
Channel	Frequency (MHz)	Data Rate 1Mbps	Channel	2Mbps	5.5Mbps	11Mbps	
CH 1	2412	12.43	CH 6	12.42	12.43	12.40	12.5
CH 6	2437	12.48					12.5
CH 11	2462	12.46					12.5

WLAN 2.4GHz 802.11g Average Power (dBm)											Tune up Limit (dBm)
Power vs. Channel			Power vs. Data Rate								
Channel	Frequency (MHz)	Data Rate 6Mbps	Channel	9Mbps	12Mbps	18Mbps	24Mbps	36Mbps	48Mbps	54Mbps	
CH 1	2412	10.46	CH 6	13.81	13.83	13.86	13.82	13.87	13.79	13.82	10.5
CH 6	2437	13.89									14.0
CH 11	2462	11.94									12.0

WLAN 2.4GHz 802.11n-HT20 Average Power (dBm)											Tune up Limit (dBm)
Power vs. Channel			Power vs. MCS Index								
Channel	Frequency (MHz)	MCS Index MCS0	Channel	MCS1	MCS2	MCS3	MCS4	MCS5	MCS6	MCS7	
CH 1	2412	10.39	CH 6	13.82	13.80	13.76	13.79	13.83	13.81	13.80	10.5
CH 6	2437	13.86									14.0
CH 11	2462	11.93									12.0

WLAN 2.4GHz 802.11n-HT40 Average Power (dBm)											Tune up Limit (dBm)
Power vs. Channel			Power vs. MCS Index								
Channel	Frequency (MHz)	MCS Index MCS0	Channel	MCS1	MCS2	MCS3	MCS4	MCS5	MCS6	MCS7	
CH 3	2422	8.40	CH 6	11.92	11.93	11.90	11.95	11.88	11.89	11.93	8.5
CH 6	2437	11.96									12.0
CH 9	2452	11.42									11.5

<Antenna 0+1>

WLAN 2.4GHz 802.11n-HT20 Average Power (dBm)											Tune up Limit (dBm)
Power vs. Channel			Power vs. MCS Index								
Channel	Frequency (MHz)	MCS Index MCS0	Channel	MCS1	MCS2	MCS3	MCS4	MCS5	MCS6	MCS7	
CH 1	2412	10.47	CH 6	11.90	11.87	11.88	11.87	11.88	11.82	11.85	10.5
CH 6	2437	11.92									12.0
CH 11	2462	11.39									11.5

WLAN 2.4GHz 802.11n-HT40 Average Power (dBm)											Tune up Limit (dBm)
Power vs. Channel			Power vs. MCS Index								
Channel	Frequency (MHz)	MCS Index MCS0	Channel	MCS1	MCS2	MCS3	MCS4	MCS5	MCS6	MCS7	
CH 3	2422	6.99	CH 6	11.46	11.43	11.38	11.42	11.40	11.43	11.38	7.0
CH 6	2437	11.49									11.5
CH 9	2452	10.47									10.5

<Bluetooth Conducted Power>

Bluetooth average power (dBm)				
Mode	GFSK	π/4-DQPSK	8-DPSK	BT4.0 LE, GFSK
Measured Power	5.19	3.06	1.43	5.72
Tune Up Limit	6.0	5.0	3.0	6.0

Note:

1. Per KDB 447498 D01v05r01, the 1-g and 10-g SAR test exclusion thresholds for 100 MHz to 6 GHz at *test separation distances* ≤ 50 mm are determined by:
   [(*max. power of channel, including tune-up tolerance, mW*)/(*min. test separation distance, mm*)] ·[√f(GHz)] ≤ 3.0 for 1-g SAR and ≤ 7.5 for 10-g extremity SAR
   - f(GHz) is the RF channel transmit frequency in GHz
   - Power and distance are rounded to the nearest mW and mm before calculation
   - The result is rounded to one decimal place for comparison

Bluetooth Max Power (dBm)	Distance (mm)	Frequency (GHz)	exclusion thresholds
6	5	2.48	1.26

2. Per KDB 447498 D01v05r01 exclusion thresholds is 1.26 < 3, RF exposure evaluation is not required.

11. Antenna Location

<Laptop>

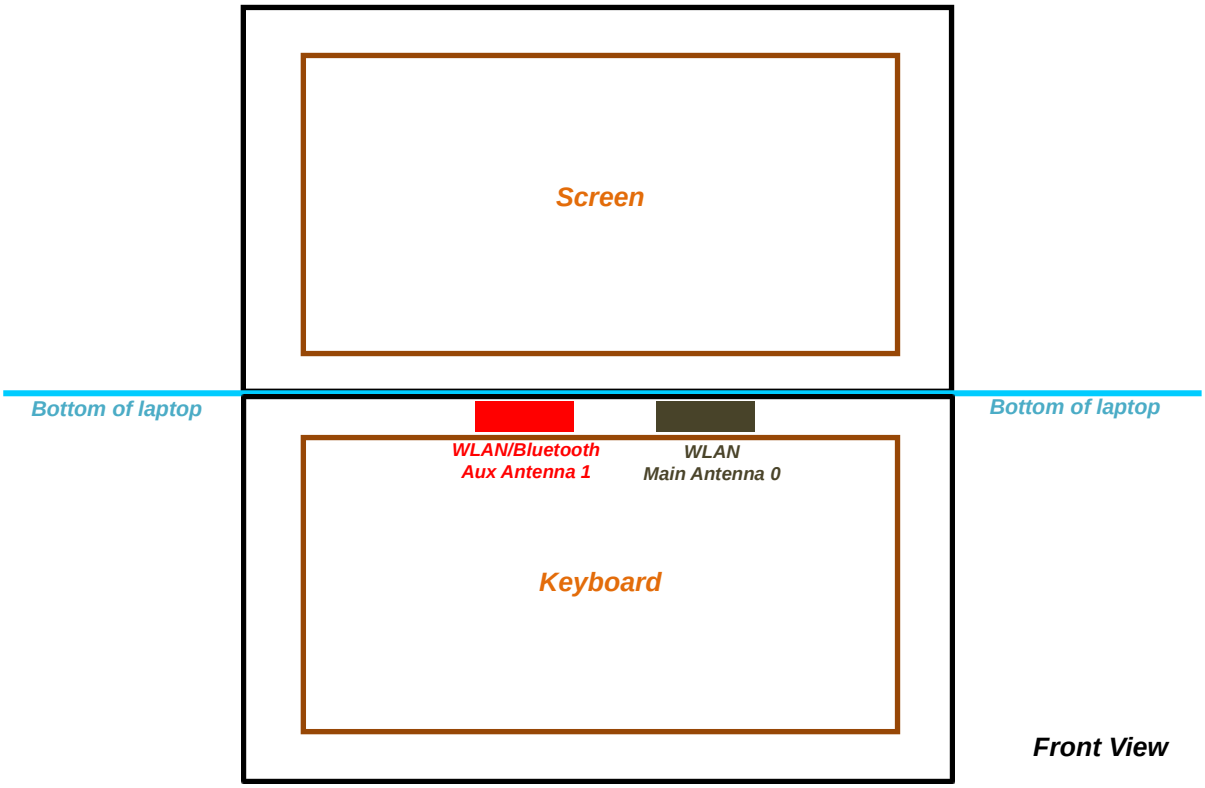

<Tablet>

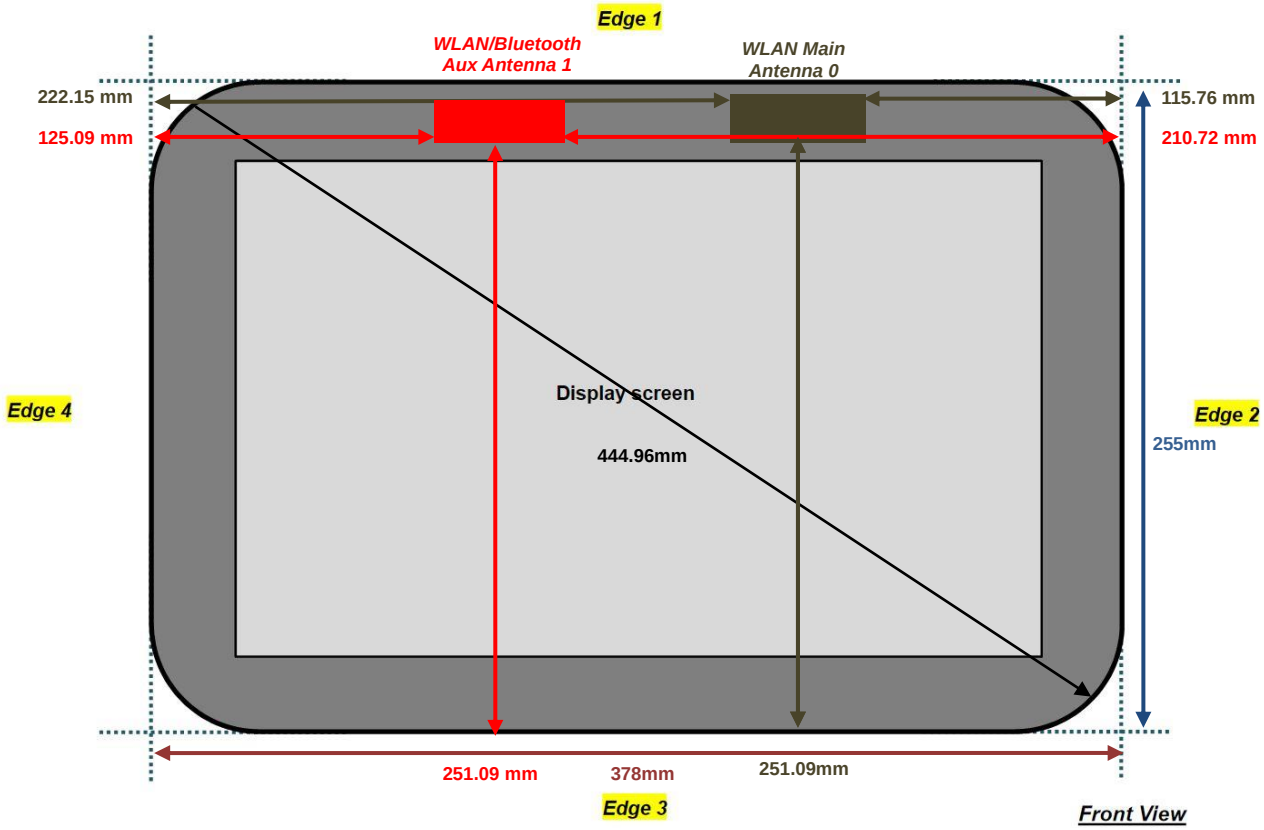

Antenna	Test Configurations	Antenna-to-edge/surface
WLAN Antenna 0	Bottom Face	<5 mm
WLAN Antenna 0	Edge 1	<5 mm
WLAN/Bluetooth Antenna 1	Bottom Face	<5 mm
WLAN/Bluetooth Antenna 1	Edge 1	<5 mm

Note: WLAN Antenna 0 and WLAN/Bluetooth Antenna 1 to bottom face and Edge 1 distance as above table.

<WLAN SAR test exclusion table>

Exposure Position	Wireless Interface	802.11b Ant 0	802.11b Ant 1
	Tune-up Maximum power	15	14
	Tune-up Maximum rated power(mW)	32.00	25.00
Bottom Face	Antenna to user (mm)	5	5
	SAR exclusion threshold	10.04	7.85
	SAR testing required?	Yes	Yes
Edge 1	Antenna to user (mm)	5	5
	SAR exclusion threshold	10.04	7.85
	SAR testing required?	Yes	Yes
Edge 2	Antenna to user (mm)	115.76	210.72
	SAR exclusion threshold	753.2	1702.8
	SAR testing required?	No	No
Edge 3	Antenna to user (mm)	251.09	251.09
	SAR exclusion threshold	2106.5	2106.5
	SAR testing required?	No	No
Edge 4	Antenna to user (mm)	222.15	125.09
	SAR exclusion threshold	1817.1	846.5
	SAR testing required?	No	No

Note:

1. Maximum power is the source-based time-average power and represents the maximum RF output power among production units
2. Per KDB 447498 D01v05r01, for larger devices, the test separation distance of adjacent edge configuration is determined by the closest separation between the antenna and the user.
3. Per KDB 447498 D01v05r01, standalone SAR test exclusion threshold is applied; If the distance of the antenna to the user is < 5mm, 5mm is used to determine SAR exclusion threshold
4. Per KDB 447498 D01v05r01, the 1-g and 10-g SAR test exclusion thresholds for 100 MHz to 6 GHz at *test separation distances* ≤ 50 mm are determined by:
   [(*max. power of channel, including tune-up tolerance, mW*)/(*min. test separation distance, mm*)] ·[$\sqrt{f(GHz)}$] ≤ 3.0 for 1-g SAR and ≤ 7.5 for 10-g extremity SAR
   - f(GHz) is the RF channel transmit frequency in GHz
   - Power and distance are rounded to the nearest mW and mm before calculation
   - The result is rounded to one decimal place for comparison
   - For < 50 mm distance, we just calculate mW of the exclusion threshold value (3.0) to do compare. This formula is [3.0] / [$\sqrt{f(GHz)}$] ·[(*min. test separation distance, mm*)] = exclusion threshold of mW.
5. Per KDB 447498 D01v05r01, at 100 MHz to 6 GHz and for *test separation distances* > 50 mm, the SAR test exclusion threshold is determined according to the following
   a) [Threshold at 50 mm in step 1) + (test separation distance - 50 mm)·(f(MHz)/150)] mW, at 100 MHz to 1500 MHz
   b) [Threshold at 50 mm in step 1) + (test separation distance - 50 mm)·10] mW at > 1500 MHz and ≤ 6 GHz

12. SAR Test Results

Note:

1. Per KDB 447498 D01v05r01, the reported SAR is the measured SAR value adjusted for maximum tune-up tolerance.
   a. Tune-up scaling Factor = tune-up limit power (mW) / EUT RF power (mW), where tune-up limit is the maximum rated power among all production units.
   b. For WLAN: Reported SAR(W/kg)= Measured SAR(W/kg)*Tune-up Scaling Factor
2. Per KDB 447498 D01v05r01, for each exposure position, testing of other required channels within the operating mode of a frequency band is not required when the *reported* 1-g or 10-g SAR for the mid-band or highest output power channel is:
   - ≤ 0.8 W/kg or 2.0 W/kg, for 1-g or 10-g respectively, when the transmission band is ≤ 100 MHz
   - ≤ 0.6 W/kg or 1.5 W/kg, for 1-g or 10-g respectively, when the transmission band is between 100 MHz and 200 MHz
   - ≤ 0.4 W/kg or 1.0 W/kg, for 1-g or 10-g respectively, when the transmission band is ≥ 200 MHz
3. This device supports SISO mode and MIMO mode configuration, when the single antenna RF power in SISO mode is larger or equal to the single antenna RF power in MIMO mode, and for RF exposure assessment of MIMO mode simultaneous transmission exclusion analysis was performed with SAR test results of each antenna in SISO mode

12.1 Body SAR

<WLAN SAR DTS>

Plot No.	Band	Mode	Test Position	Gap (cm)	Antenna	Ch.	Freq. (MHz)	Average Power (dBm)	Tune-Up Limit (dBm)	Tune-up Scaling Factor	Power Drift (dB)	Measured 1g SAR (W/kg)	Reported 1g SAR (W/kg)
1	WLAN2.4GHz	802.11b 1Mbps	Bottom Face	0cm	Ant 0	6	2437	13.98	14	1.005	0.09	0.135	0.136
2	WLAN2.4GHz	802.11b 1Mbps	Edge 1	0cm	Ant 0	6	2437	13.98	14	1.005	-0.1	0.655	0.658
3	WLAN2.4GHz	802.11b 1Mbps	Bottom	0cm	Ant 0	6	2437	13.98	14	1.005	-0.02	0.364	0.366
4	WLAN2.4GHz	802.11g 6Mbps	Edge 1	0cm	Ant 0	6	2437	14.96	15	1.009	-0.09	0.738	0.745
5	WLAN2.4GHz	802.11n-HT20 MCS0	Edge 1	0cm	Ant 0	6	2437	14.81	15	1.045	-0.13	0.780	**0.815**
6	WLAN2.4GHz	802.11n-HT20 MCS0	Edge 1	0cm	Ant 0	1	2412	11.89	12	1.026	-0.08	0.636	0.652
7	WLAN2.4GHz	802.11n-HT20 MCS0	Edge 1	0cm	Ant 0	11	2462	11.83	12	1.040	-0.04	0.594	0.618
8	WLAN2.4GHz	802.11n-HT40 MCS0	Edge 1	0cm	Ant 0	6	2437	14.83	15	1.040	-0.03	0.500	0.520
10	WLAN2.4GHz	802.11b 1Mbps	Bottom Face	0cm	Ant 1	6	2437	12.48	12.5	1.005	0.17	0.022	0.022
11	WLAN2.4GHz	802.11b 1Mbps	Edge 1	0cm	Ant 1	6	2437	12.48	12.5	1.005	-0.04	0.280	0.281
12	WLAN2.4GHz	802.11b 1Mbps	Bottom	0cm	Ant 1	6	2437	12.48	12.5	1.005	0.07	0.120	0.121
13	WLAN2.4GHz	802.11g 6Mbps	Edge 1	0cm	Ant 1	6	2437	13.89	14	1.026	-0.02	0.347	0.356
14	WLAN2.4GHz	802.11n-HT20 MCS0	Edge 1	0cm	Ant 1	6	2437	13.86	14	1.033	-0.01	0.378	0.390

12.2 Highest SAR Plot

Test Laboratory: Sporton International Inc. SAR/HAC Testing Lab Date: 2013/10/3

#05_WLAN2.4GHz_802.11n-HT20 MCS0_Edge 1_0cm_Ch6;Ant 0

Communication System: 802.11n; Frequency: 2437 MHz;Duty Cycle: 1:1
Medium: MSL_2450_131003 Medium parameters used: f = 2437 MHz; σ = 2.001 S/m; ε_r = 53.956; ρ = 1000 kg/m^3
Ambient Temperature：23.6 ℃; Liquid Temperature：22.6 ℃

DASY5 Configuration:
- Probe: ES3DV3 - SN3071; ConvF(4.02, 4.02, 4.02); Calibrated: 2013/6/18;
- Sensor-Surface: 3mm (Mechanical Surface Detection)
- Electronics: DAE4 Sn1279; Calibrated: 2013/1/28
- Phantom: ELI v4.0; Type: QDOVA001BB; Serial: 1173
- Measurement SW: DASY52, Version 52.8 (6); SEMCAD X Version 14.6.9 (7117)

Configuration/Ch6/Area Scan (51x81x1): Interpolated grid: dx=1.200 mm, dy=1.200 mm
Maximum value of SAR (interpolated) = 1.20 W/kg

Configuration/Ch6/Zoom Scan (7x7x7)/Cube 0: Measurement grid: dx=5mm, dy=5mm, dz=5mm
Reference Value = 22.678 V/m; Power Drift = -0.13 dB
Peak SAR (extrapolated) = 1.74 W/kg
SAR(1 g) = 0.780 W/kg; SAR(10 g) = 0.306 W/kg
Maximum value of SAR (measured) = 1.04 W/kg

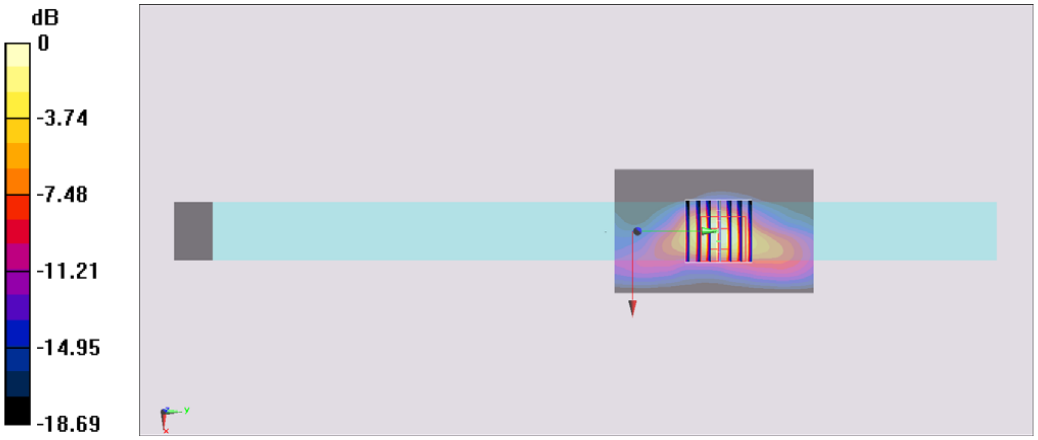

0 dB = 1.04 W/kg = 0.17 dBW/kg

13. Simultaneous Transmission Analysis

NO.	Simultaneous Transmission Configurations	Supported
1.	WLAN Antenna 0 + Bluetooth Antenna 1	Yes
2.	WLAN Antenna 0 + WLAN Antenna 1	Yes

Note:

1. The Scaled SAR summation is calculated based on the same configuration and test position.
2. Per KDB 447498 D01v05r01, simultaneous transmission SAR is compliant if,
   i) Scalar SAR summation < 1.6W/kg.
   ii) SPLSR = $(SAR_1 + SAR_2)^{1.5}$ / (*min. separation distance, mm*), and the peak separation distance is determined from the square root of $[(x_1-x_2)^2 + (y_1-y_2)^2 + (z_1-z_2)^2]$, where (x_1, y_1, z_1) and (x_2, y_2, z_2) are the coordinates of the extrapolated peak SAR locations in the zoom scan
   If SPLSR ≤ 0.04, simultaneously transmission SAR measurement is not necessary
   iii) Simultaneously transmission SAR measurement, and the reported multi-band SAR < 1.6W/kg
3. For simultaneous transmission analysis, Bluetooth SAR is estimated per KDB 447498 D01v05r01 based on the formula below.
   i) (*max. power of channel, including tune-up tolerance, mW*)/(*min. test separation distance, mm*)]·[$\sqrt{f(GHz)}/x$] W/kg for *test separation distances* ≤ 50 mm; where x = 7.5 for 1-g SAR, and x = 18.75 for 10-g SAR.
   ii) When the minimum test separation distance is < 5mm, the distance is used 5mm to determine SAR test exclusion.
   iii) 0.4 W/kg for 1-g SAR and 1.0 W/kg for 10-g SAR, when the *test separation distances* is > 50 mm.

Bluetooth Max Power	Exposure Position	Bottom Face
	Antenna to User	< 5 mm
6 dBm	Estimated SAR (W/kg)	0.168 W/kg

13.1 Body Exposure Conditions

<WLAN Antenna 0 + WLAN Antenna 1>

Position	WLAN Ant 0		WLAN Ant 1		Summed SAR (W/kg)	SPLSR	Case No	Multi-Band Combined SAR(W/kg)
	Plot No	SAR (W/kg)	Plot No	SAR (W/kg)				
Bottom Face At 0cm	1	0.136	10	0.022	**0.16**			
Edge1 At 0cm	5	0.815	14	0.390	**1.21**			
Bottom At 0cm	3	0.366	12	0.121	**0.49**			

<Bluetooth Antenna 1 + WLAN Antenna 0>

Position	WLAN Ant 0		Bluetooth	Summed SAR (W/kg)	SPLSR	Case No	Multi-Band Combined SAR(W/kg)
	Plot No	SAR (W/kg)	Estimated SAR (W/kg)				
Bottom Face At 0cm	1	0.136	0.168	**0.30**			
Edge1 At 0cm	5	0.815	0.168	**0.98**			
Bottom At 0cm	3	0.366	0.168	**0.53**			

Test Engineer： Aaron Chen and Vic Yang

14. Uncertainty Assessment

The component of uncertainly may generally be categorized according to the methods used to evaluate them. The evaluation of uncertainly by the statistical analysis of a series of observations is termed a Type An evaluation of uncertainty. The evaluation of uncertainty by means other than the statistical analysis of a series of observation is termed a Type B evaluation of uncertainty. Each component of uncertainty, however evaluated, is represented by an estimated standard deviation, termed standard uncertainty, which is determined by the positive square root of the estimated variance.

A Type A evaluation of standard uncertainty may be based on any valid statistical method for treating data. This includes calculating the standard deviation of the mean of a series of independent observations; using the method of least squares to fit a curve to the data in order to estimate the parameter of the curve and their standard deviations; or carrying out an analysis of variance in order to identify and quantify random effects in certain kinds of measurement.

A type B evaluation of standard uncertainty is typically based on scientific judgment using all of the relevant information available. These may include previous measurement data, experience, and knowledge of the behavior and properties of relevant materials and instruments, manufacture's specification, data provided in calibration reports and uncertainties assigned to reference data taken from handbooks. Broadly speaking, the uncertainty is either obtained from an outdoor source or obtained from an assumed distribution, such as the normal distribution, rectangular or triangular distributions indicated in Table 14.1

Uncertainty Distributions	Normal	Rectangular	Triangular	U-Shape
Multi-plying Factor[(a)]	1/k[(b)]	1/√3	1/√6	1/√2

(a) standard uncertainty is determined as the product of the multiplying factor and the estimated range of variations in the measured quantity

(b) κ is the coverage factor

Table 14.1. Standard Uncertainty for Assumed Distribution

The combined standard uncertainty of the measurement result represents the estimated standard deviation of the result. It is obtained by combining the individual standard uncertainties of both Type A and Type B evaluation using the usual "root-sum-squares" (RSS) methods of combining standard deviations by taking the positive square root of the estimated variances.

Expanded uncertainty is a measure of uncertainty that defines an interval about the measurement result within which the measured value is confidently believed to lie. It is obtained by multiplying the combined standard uncertainty by a coverage factor. Typically, the coverage factor ranges from 2 to 3. Using a coverage factor allows the true value of a measured quantity to be specified with a defined probability within the specified uncertainty range. For purpose of this document, a coverage factor two is used, which corresponds to confidence interval of about 95 %. The DASY uncertainty Budget is shown in the following tables.

Error Description	Uncertainty Value (±%)	Probability Distribution	Divisor	Ci (1g)	Ci (10g)	Standard Uncertainty (1g)	Standard Uncertainty (10g)
Measurement System							
Probe Calibration	6.0	Normal	1	1	1	± 6.0 %	± 6.0 %
Axial Isotropy	4.7	Rectangular	√3	0.7	0.7	± 1.9 %	± 1.9 %
Hemispherical Isotropy	9.6	Rectangular	√3	0.7	0.7	± 3.9 %	± 3.9 %
Boundary Effects	1.0	Rectangular	√3	1	1	± 0.6 %	± 0.6 %
Linearity	4.7	Rectangular	√3	1	1	± 2.7 %	± 2.7 %
System Detection Limits	1.0	Rectangular	√3	1	1	± 0.6 %	± 0.6 %
Readout Electronics	0.3	Normal	1	1	1	± 0.3 %	± 0.3 %
Response Time	0.8	Rectangular	√3	1	1	± 0.5 %	± 0.5 %
Integration Time	2.6	Rectangular	√3	1	1	± 1.5 %	± 1.5 %
RF Ambient Noise	3.0	Rectangular	√3	1	1	± 1.7 %	± 1.7 %
RF Ambient Reflections	3.0	Rectangular	√3	1	1	± 1.7 %	± 1.7 %
Probe Positioner	0.4	Rectangular	√3	1	1	± 0.2 %	± 0.2 %
Probe Positioning	2.9	Rectangular	√3	1	1	± 1.7 %	± 1.7 %
Max. SAR Eval.	1.0	Rectangular	√3	1	1	± 0.6 %	± 0.6 %
Test Sample Related							
Device Positioning	2.9	Normal	1	1	1	± 2.9 %	± 2.9 %
Device Holder	3.6	Normal	1	1	1	± 3.6 %	± 3.6 %
Power Drift	5.0	Rectangular	√3	1	1	± 2.9 %	± 2.9 %
Phantom and Setup							
Phantom Uncertainty	4.0	Rectangular	√3	1	1	± 2.3 %	± 2.3 %
Liquid Conductivity (Target)	5.0	Rectangular	√3	0.64	0.43	± 1.8 %	± 1.2 %
Liquid Conductivity (Meas.)	2.5	Normal	1	0.64	0.43	± 1.6 %	± 1.1 %
Liquid Permittivity (Target)	5.0	Rectangular	√3	0.6	0.49	± 1.7 %	± 1.4 %
Liquid Permittivity (Meas.)	2.5	Normal	1	0.6	0.49	± 1.5 %	± 1.2 %
Combined Standard Uncertainty						± 11.0 %	± 10.8 %
Coverage Factor for 95 %						K=2	
Expanded Uncertainty						**± 22.0 %**	**± 21.5 %**

Table 14.2. Uncertainty Budget for frequency range 300 MHz to 3 GHz

15. References

[1] FCC 47 CFR Part 2 “Frequency Allocations and Radio Treaty Matters; General Rules and Regulations”

[2] ANSI/IEEE Std. C95.1-1992, “IEEE Standard for Safety Levels with Respect to Human Exposure to Radio Frequency Electromagnetic Fields, 3 kHz to 300 GHz”, September 1992

[3] IEEE Std. 1528-2003, “Recommended Practice for Determining the Peak Spatial-Average Specific Absorption Rate (SAR) in the Human Head from Wireless Communications Devices: Measurement Techniques”, December 2003

[4] SPEAG DASY System Handbook

[5] FCC KDB 248227 D01 v01r02, “SAR Measurement Procedures for 802.11 a/b/g Transmitters”, May 2007

[6] FCC KDB 447498 D01 v05r01, “Mobile and Portable Device RF Exposure Procedures and Equipment Authorization Policies”, May 2013

[7] FCC KDB 616217 D04 v01r01, “SAR Evaluation Considerations for Laptop, Notebook, Netbook and Tablet Computers”, May 2013

[8] FCC KDB 865664 D01 v01r01, "SAR Measurement Requirements for 100 MHz to 6 GHz", May 2013.

Test Laboratory: Sporton International Inc. SAR/HAC Testing Lab Date: 2013/10/3

System Check_Body_2450MHz_131003

DUT: D2450V2-SN:736

Communication System: CW; Frequency: 2450 MHz;Duty Cycle: 1:1
Medium: MSL_2450_131003 Medium parameters used: f = 2450 MHz; σ = 2.02 S/m; ε_r = 53.936; ρ = 1000 kg/m^3
Ambient Temperature：23.6 ℃； Liquid Temperature：22.6 ℃

DASY5 Configuration:
- Probe: ES3DV3 - SN3071; ConvF(4.02, 4.02, 4.02); Calibrated: 2013/6/18;
- Sensor-Surface: 3mm (Mechanical Surface Detection)
- Electronics: DAE4 Sn1279; Calibrated: 2013/1/28
- Phantom: ELI v4.0; Type: QDOVA001BB; Serial: 1173
- Measurement SW: DASY52, Version 52.8 (6); SEMCAD X Version 14.6.9 (7117)

Configuration/Pin=250mW/Area Scan (61x61x1): Interpolated grid: dx=1.200 mm, dy=1.200 mm
Maximum value of SAR (interpolated) = 18.7 W/kg

Configuration/Pin=250mW/Zoom Scan (7x7x7)/Cube 0: Measurement grid: dx=5mm, dy=5mm, dz=5mm
Reference Value = 94.064 V/m; Power Drift = -0.01 dB
Peak SAR (extrapolated) = 26.6 W/kg
SAR(1 g) = 13.1 W/kg; SAR(10 g) = 6.21 W/kg
Maximum value of SAR (measured) = 17.0 W/kg

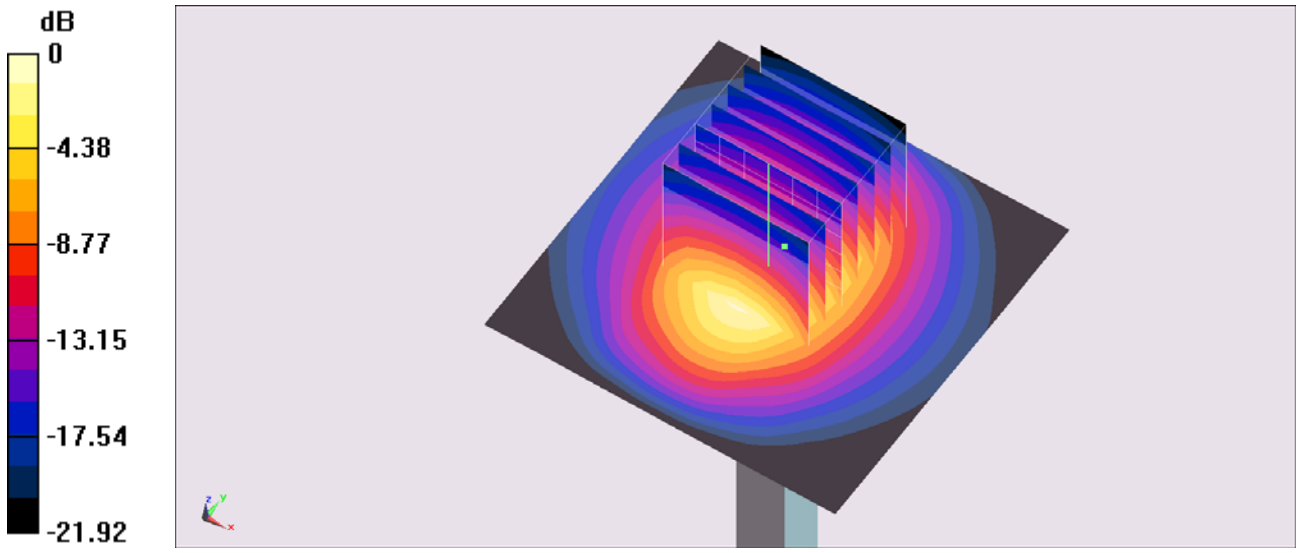

0 dB = 17.0 W/kg = 12.30 dBW/kg

#01_WLAN2.4GHz_802.11b 1Mbps_Bottom Face_0cm_Ch6;Ant 0

Communication System: 802.11b; Frequency: 2437 MHz;Duty Cycle: 1:1
Medium: MSL_2450_131003 Medium parameters used: f = 2437 MHz; σ = 2.001 S/m; ε_r = 53.956; ρ = 1000 kg/m^3
Ambient Temperature：23.6 ℃; Liquid Temperature：22.6 ℃

DASY5 Configuration:
- Probe: ES3DV3 - SN3071; ConvF(4.02, 4.02, 4.02); Calibrated: 2013/6/18;
- Sensor-Surface: 3mm (Mechanical Surface Detection)
- Electronics: DAE4 Sn1279; Calibrated: 2013/1/28
- Phantom: ELI v4.0; Type: QDOVA001BB; Serial: 1173
- Measurement SW: DASY52, Version 52.8 (6); SEMCAD X Version 14.6.9 (7117)

Configuration/Ch6/Area Scan (51x81x1): Interpolated grid: dx=1.200 mm, dy=1.200 mm
Maximum value of SAR (interpolated) = 0.162 W/kg

Configuration/Ch6/Zoom Scan (7x7x7)/Cube 0: Measurement grid: dx=5mm, dy=5mm, dz=5mm
Reference Value = 9.572 V/m; Power Drift = 0.09 dB
Peak SAR (extrapolated) = 0.293 W/kg
SAR(1 g) = 0.135 W/kg; SAR(10 g) = 0.067 W/kg
Maximum value of SAR (measured) = 0.173 W/kg

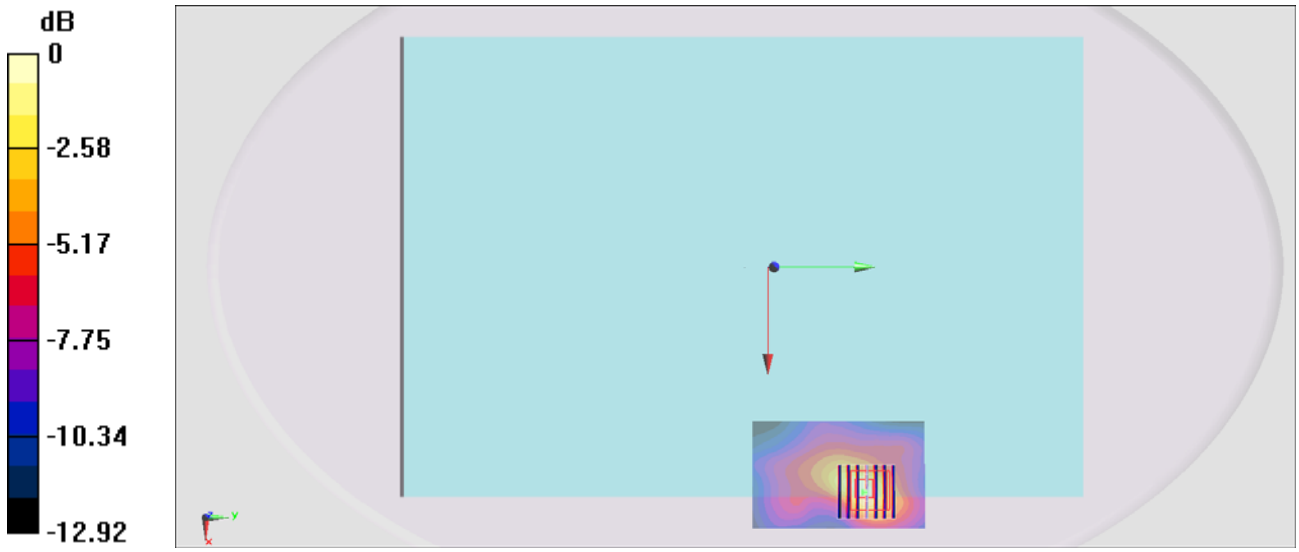

0 dB = 0.173 W/kg = -7.62 dBW/kg

#02_WLAN2.4GHz_802.11b 1Mbps_Edge 1_0cm_Ch6;Ant 0

Communication System: 802.11b; Frequency: 2437 MHz;Duty Cycle: 1:1
Medium: MSL_2450_131003 Medium parameters used: f = 2437 MHz; σ = 2.001 S/m; ε_r = 53.956; ρ = 1000 kg/m^3
Ambient Temperature：23.6 ℃； Liquid Temperature：22.6 ℃

DASY5 Configuration:
- Probe: ES3DV3 - SN3071; ConvF(4.02, 4.02, 4.02); Calibrated: 2013/6/18;
- Sensor-Surface: 3mm (Mechanical Surface Detection)
- Electronics: DAE4 Sn1279; Calibrated: 2013/1/28
- Phantom: ELI v4.0; Type: QDOVA001BB; Serial: 1173
- Measurement SW: DASY52, Version 52.8 (6); SEMCAD X Version 14.6.9 (7117)

Configuration/Ch6/Area Scan (51x81x1): Interpolated grid: dx=1.200 mm, dy=1.200 mm
Maximum value of SAR (interpolated) = 0.991 W/kg

Configuration/Ch6/Zoom Scan (7x7x7)/Cube 0: Measurement grid: dx=5mm, dy=5mm, dz=5mm
Reference Value = 21.765 V/m; Power Drift = -0.10 dB
Peak SAR (extrapolated) = 1.45 W/kg
SAR(1 g) = 0.655 W/kg; SAR(10 g) = 0.256 W/kg
Maximum value of SAR (measured) = 0.881 W/kg

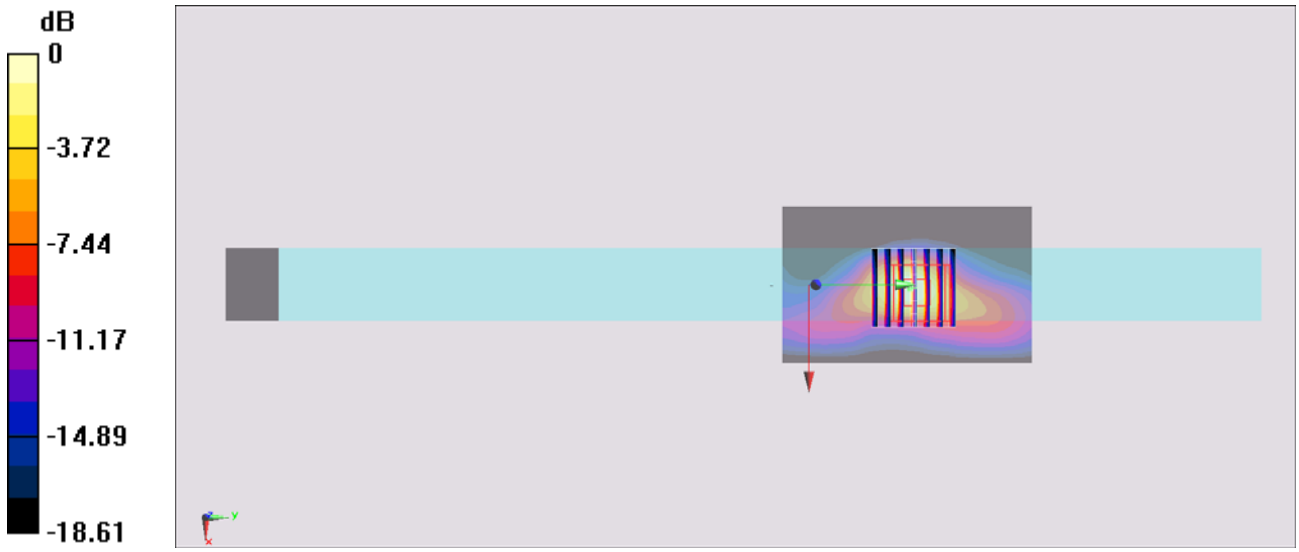

0 dB = 0.881 W/kg = -0.55 dBW/kg

#03_WLAN2.4GHz_802.11b 1Mbps_Bottom_0cm_Ch6;Ant 0

Communication System: 802.11b; Frequency: 2437 MHz;Duty Cycle: 1:1
Medium: MSL_2450_131003 Medium parameters used: f = 2437 MHz; σ = 2.001 S/m; ε_r = 53.956; ρ = 1000 kg/m^3
Ambient Temperature：23.6 ℃； Liquid Temperature：22.6 ℃

DASY5 Configuration:
- Probe: ES3DV3 - SN3071; ConvF(4.02, 4.02, 4.02); Calibrated: 2013/6/18;
- Sensor-Surface: 3mm (Mechanical Surface Detection)
- Electronics: DAE4 Sn1279; Calibrated: 2013/1/28
- Phantom: ELI v4.0; Type: QDOVA001BB; Serial: 1173
- Measurement SW: DASY52, Version 52.8 (6); SEMCAD X Version 14.6.9 (7117)

Configuration/Ch6/Area Scan (51x81x1): Interpolated grid: dx=1.200 mm, dy=1.200 mm
Maximum value of SAR (interpolated) = 0.463 W/kg

Configuration/Ch6/Zoom Scan (7x7x7)/Cube 0: Measurement grid: dx=5mm, dy=5mm, dz=5mm
Reference Value = 16.273 V/m; Power Drift = -0.02 dB
Peak SAR (extrapolated) = 0.783 W/kg
SAR(1 g) = 0.364 W/kg; SAR(10 g) = 0.153 W/kg
Maximum value of SAR (measured) = 0.492 W/kg

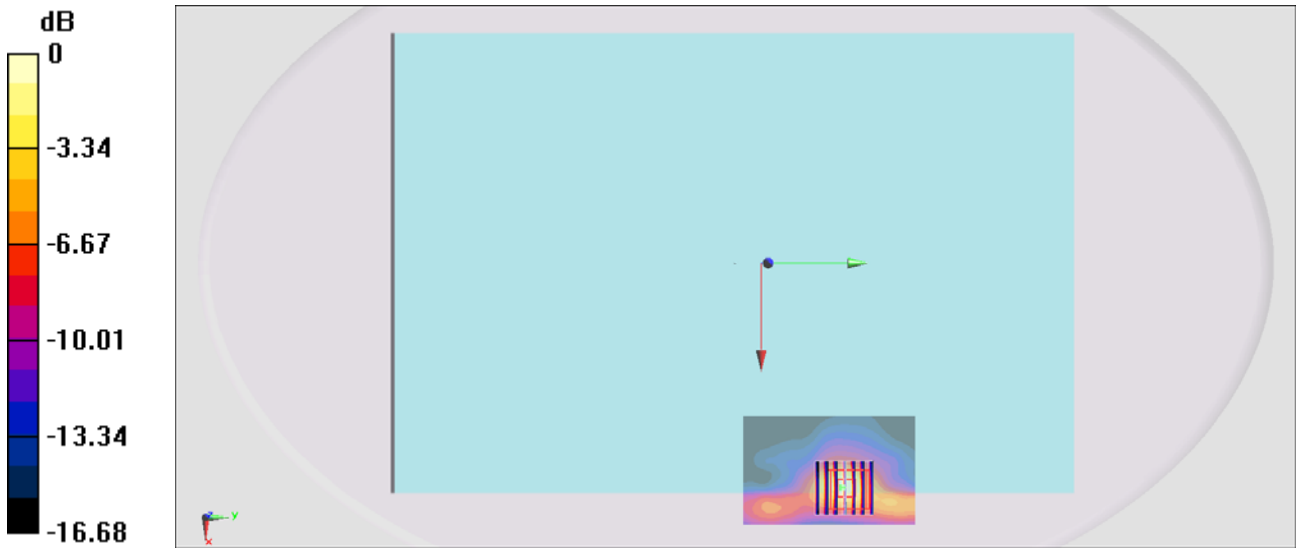

0 dB = 0.492 W/kg = -3.08 dBW/kg

#04_WLAN2.4GHz_802.11g 6Mbps_Edge 1_0cm_Ch6;Ant 0

Communication System: 802.11g; Frequency: 2437 MHz;Duty Cycle: 1:1
Medium: MSL_2450_131003 Medium parameters used: f = 2437 MHz; σ = 2.001 S/m; ε_r = 53.956; ρ = 1000 kg/m^3
Ambient Temperature：23.6 ℃； Liquid Temperature：22.6 ℃

DASY5 Configuration:
- Probe: ES3DV3 - SN3071; ConvF(4.02, 4.02, 4.02); Calibrated: 2013/6/18;
- Sensor-Surface: 3mm (Mechanical Surface Detection)
- Electronics: DAE4 Sn1279; Calibrated: 2013/1/28
- Phantom: ELI v4.0; Type: QDOVA001BB; Serial: 1173
- Measurement SW: DASY52, Version 52.8 (6); SEMCAD X Version 14.6.9 (7117)

Configuration/Ch6/Area Scan (51x81x1): Interpolated grid: dx=1.200 mm, dy=1.200 mm
Maximum value of SAR (interpolated) = 1.10 W/kg

Configuration/Ch6/Zoom Scan (7x7x7)/Cube 0: Measurement grid: dx=5mm, dy=5mm, dz=5mm
Reference Value = 23.007 V/m; Power Drift = -0.09 dB
Peak SAR (extrapolated) = 1.65 W/kg
SAR(1 g) = 0.738 W/kg; SAR(10 g) = 0.292 W/kg
Maximum value of SAR (measured) = 0.985 W/kg

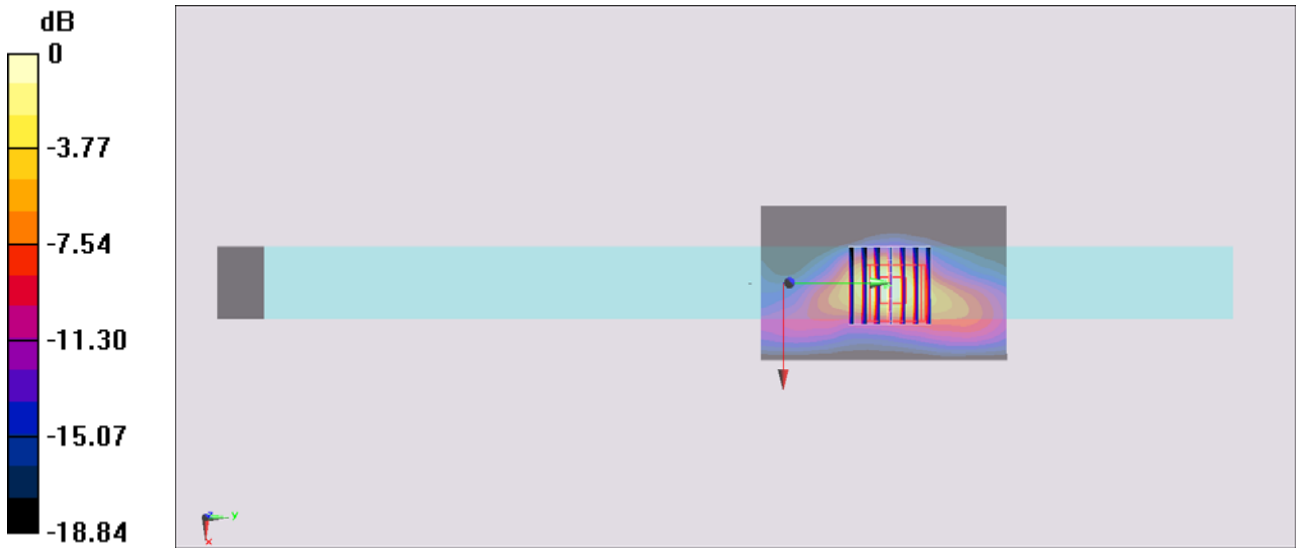

0 dB = 0.985 W/kg = -0.07 dBW/kg

#05_WLAN2.4GHz_802.11n-HT20 MCS0_Edge 1_0cm_Ch6;Ant 0

Communication System: 802.11n; Frequency: 2437 MHz;Duty Cycle: 1:1
Medium: MSL_2450_131003 Medium parameters used: f = 2437 MHz; σ = 2.001 S/m; ε_r = 53.956; ρ = 1000 kg/m^3
Ambient Temperature：23.6 ℃; Liquid Temperature：22.6 ℃

DASY5 Configuration:
- Probe: ES3DV3 - SN3071; ConvF(4.02, 4.02, 4.02); Calibrated: 2013/6/18;
- Sensor-Surface: 3mm (Mechanical Surface Detection)
- Electronics: DAE4 Sn1279; Calibrated: 2013/1/28
- Phantom: ELI v4.0; Type: QDOVA001BB; Serial: 1173
- Measurement SW: DASY52, Version 52.8 (6); SEMCAD X Version 14.6.9 (7117)

Configuration/Ch6/Area Scan (51x81x1): Interpolated grid: dx=1.200 mm, dy=1.200 mm
Maximum value of SAR (interpolated) = 1.20 W/kg

Configuration/Ch6/Zoom Scan (7x7x7)/Cube 0: Measurement grid: dx=5mm, dy=5mm, dz=5mm
Reference Value = 22.678 V/m; Power Drift = -0.13 dB
Peak SAR (extrapolated) = 1.74 W/kg
SAR(1 g) = 0.780 W/kg; SAR(10 g) = 0.306 W/kg
Maximum value of SAR (measured) = 1.04 W/kg

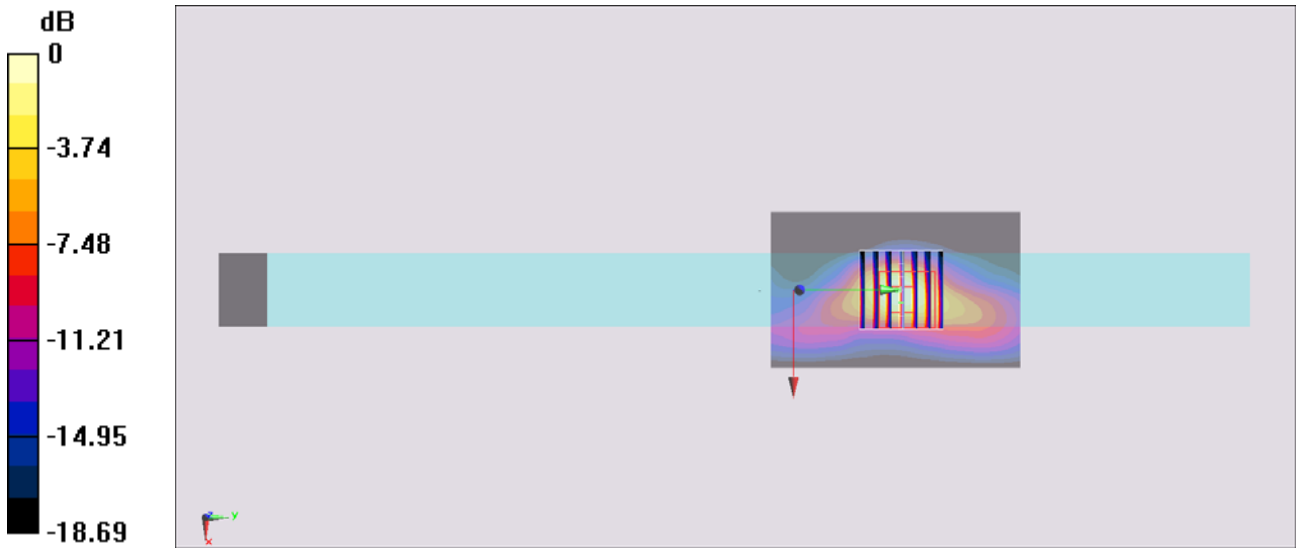

0 dB = 1.04 W/kg = 0.17 dBW/kg

#06_WLAN2.4GHz_802.11n-HT20 MCS0_Edge 1_0cm_Ch1;Ant 0

Communication System: 802.11n; Frequency: 2412 MHz;Duty Cycle: 1:1
Medium: MSL_2450_131003 Medium parameters used: f = 2412 MHz; σ = 1.963 S/m; ε_r = 54.025; ρ = 1000 kg/m^3
Ambient Temperature：23.6 ℃; Liquid Temperature：22.6 ℃

DASY5 Configuration:
- Probe: ES3DV3 - SN3071; ConvF(4.02, 4.02, 4.02); Calibrated: 2013/6/18;
- Sensor-Surface: 3mm (Mechanical Surface Detection)
- Electronics: DAE4 Sn1279; Calibrated: 2013/1/28
- Phantom: ELI v4.0; Type: QDOVA001BB; Serial: 1173
- Measurement SW: DASY52, Version 52.8 (6); SEMCAD X Version 14.6.9 (7117)

Configuration/Ch1/Area Scan (51x81x1): Interpolated grid: dx=1.200 mm, dy=1.200 mm
Maximum value of SAR (interpolated) = 0.979 W/kg

Configuration/Ch1/Zoom Scan (7x7x7)/Cube 0: Measurement grid: dx=5mm, dy=5mm, dz=5mm
Reference Value = 21.403 V/m; Power Drift = -0.08 dB
Peak SAR (extrapolated) = 1.40 W/kg
SAR(1 g) = 0.636 W/kg; SAR(10 g) = 0.253 W/kg
Maximum value of SAR (measured) = 0.841 W/kg

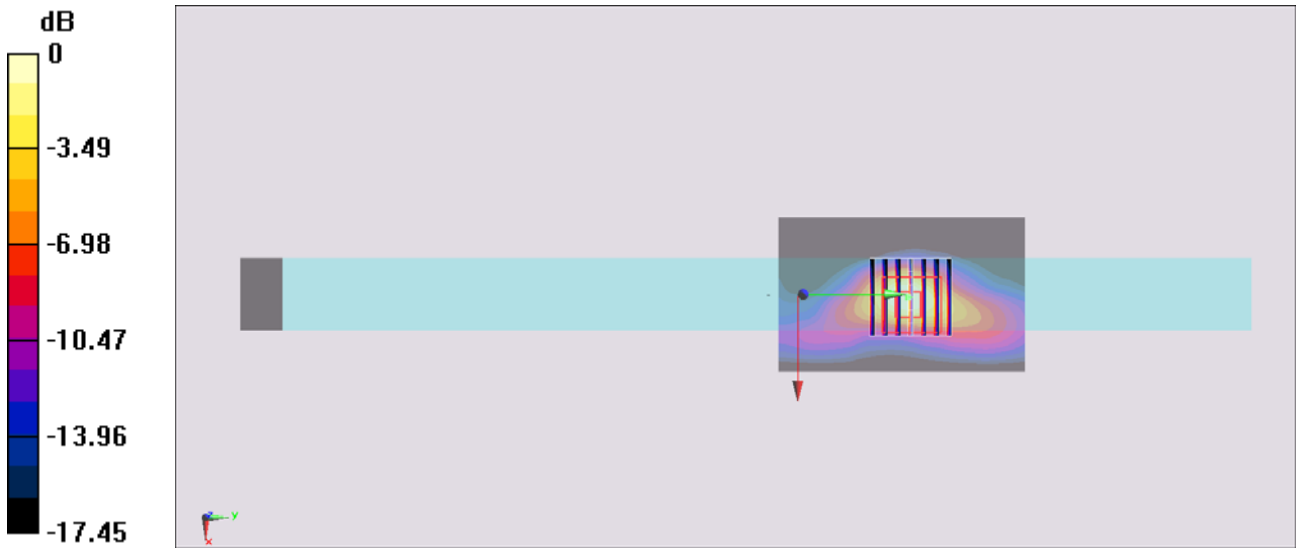

0 dB = 0.841 W/kg = -0.75 dBW/kg

#07_WLAN2.4GHz_802.11n-HT20 MCS0_Edge 1_0cm_Ch11;Ant 0

Communication System: 802.11n; Frequency: 2462 MHz;Duty Cycle: 1:1
Medium: MSL_2450_131003 Medium parameters used: f = 2462 MHz; σ = 2.037 S/m; ε_r = 53.921; ρ = 1000 kg/m^3
Ambient Temperature：23.6 ℃; Liquid Temperature：22.6 ℃

DASY5 Configuration:
- Probe: ES3DV3 - SN3071; ConvF(4.02, 4.02, 4.02); Calibrated: 2013/6/18;
- Sensor-Surface: 3mm (Mechanical Surface Detection)
- Electronics: DAE4 Sn1279; Calibrated: 2013/1/28
- Phantom: ELI v4.0; Type: QDOVA001BB; Serial: 1173
- Measurement SW: DASY52, Version 52.8 (6); SEMCAD X Version 14.6.9 (7117)

Configuration/Ch11/Area Scan (51x81x1): Interpolated grid: dx=1.200 mm, dy=1.200 mm
Maximum value of SAR (interpolated) = 0.937 W/kg

Configuration/Ch11/Zoom Scan (7x7x7)/Cube 0: Measurement grid: dx=5mm, dy=5mm, dz=5mm
Reference Value = 19.769 V/m; Power Drift = -0.04 dB
Peak SAR (extrapolated) = 1.33 W/kg
SAR(1 g) = 0.594 W/kg; SAR(10 g) = 0.233 W/kg
Maximum value of SAR (measured) = 0.804 W/kg

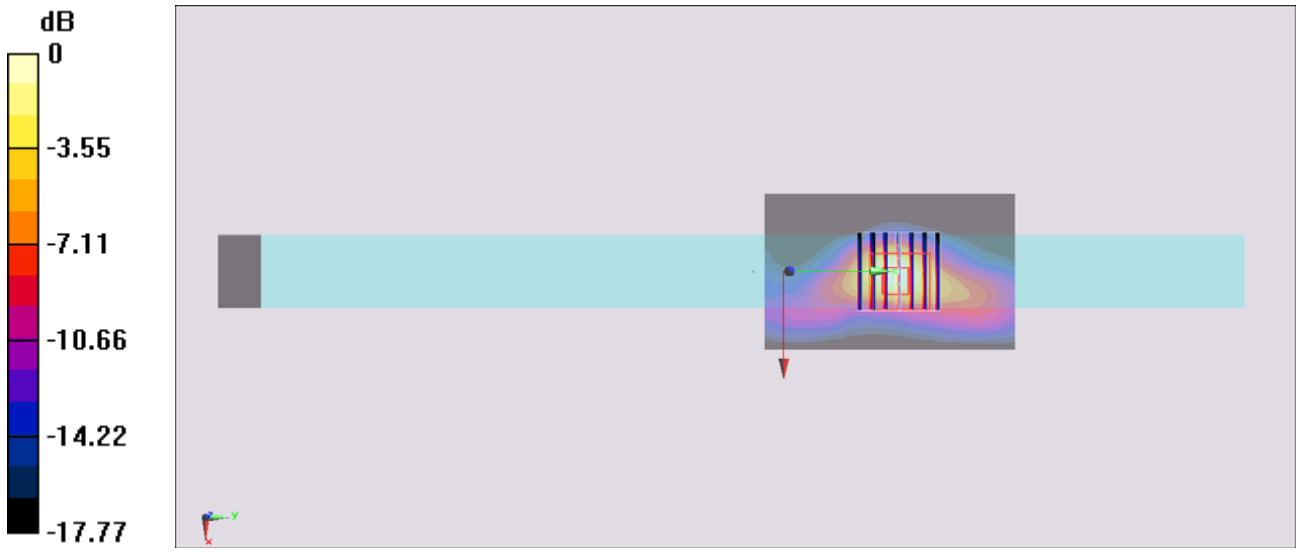

0 dB = 0.804 W/kg = -0.95 dBW/kg

#08_WLAN2.4GHz_802.11n-HT40 MCS0_Edge 1_0cm_Ch6;Ant 0

Communication System: 802.11n; Frequency: 2437 MHz;Duty Cycle: 1:1
Medium: MSL_2450_131003 Medium parameters used: f = 2437 MHz; σ = 2.001 S/m; ε_r = 53.956; ρ = 1000 kg/m^3
Ambient Temperature：23.6 ℃; Liquid Temperature：22.6 ℃

DASY5 Configuration:
- Probe: ES3DV3 - SN3071; ConvF(4.02, 4.02, 4.02); Calibrated: 2013/6/18;
- Sensor-Surface: 3mm (Mechanical Surface Detection)
- Electronics: DAE4 Sn1279; Calibrated: 2013/1/28
- Phantom: ELI v4.0; Type: QDOVA001BB; Serial: 1173
- Measurement SW: DASY52, Version 52.8 (6); SEMCAD X Version 14.6.9 (7117)

Configuration/Ch6/Area Scan (51x81x1): Interpolated grid: dx=1.200 mm, dy=1.200 mm
Maximum value of SAR (interpolated) = 0.790 W/kg

Configuration/Ch6/Zoom Scan (7x7x7)/Cube 0: Measurement grid: dx=5mm, dy=5mm, dz=5mm
Reference Value = 18.264 V/m; Power Drift = -0.03 dB
Peak SAR (extrapolated) = 1.01 W/kg
SAR(1 g) = 0.500 W/kg; SAR(10 g) = 0.186 W/kg
Maximum value of SAR (measured) = 0.712 W/kg

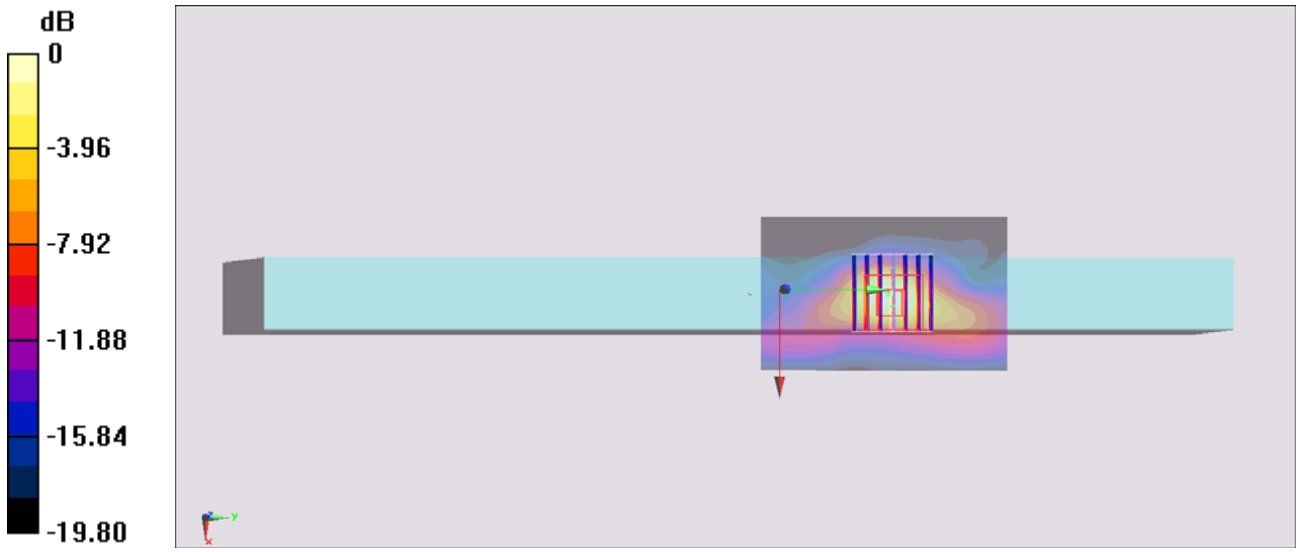

0 dB = 0.712 W/kg = -1.48 dBW/kg

#10_WLAN2.4GHz_802.11b 1Mbps_Bottom Face_0cm_Ch6;Ant 1

Communication System: 802.11b; Frequency: 2437 MHz;Duty Cycle: 1:1
Medium: MSL_2450_131003 Medium parameters used: f = 2437 MHz; σ = 2.001 S/m; ε_r = 53.956; ρ = 1000 kg/m^3
Ambient Temperature：23.6 ℃； Liquid Temperature：22.6 ℃

DASY5 Configuration:
- Probe: ES3DV3 - SN3071; ConvF(4.02, 4.02, 4.02); Calibrated: 2013/6/18;
- Sensor-Surface: 3mm (Mechanical Surface Detection)
- Electronics: DAE4 Sn1279; Calibrated: 2013/1/28
- Phantom: ELI v4.0; Type: QDOVA001BB; Serial: 1173
- Measurement SW: DASY52, Version 52.8 (6); SEMCAD X Version 14.6.9 (7117)

Configuration/Ch6/Area Scan (51x81x1): Interpolated grid: dx=1.200 mm, dy=1.200 mm
Maximum value of SAR (interpolated) = 0.0271 W/kg

Configuration/Ch6/Zoom Scan (7x7x7)/Cube 0: Measurement grid: dx=5mm, dy=5mm, dz=5mm
Reference Value = 3.720 V/m; Power Drift = 0.17 dB
Peak SAR (extrapolated) = 0.0440 W/kg
SAR(1 g) = 0.022 W/kg; SAR(10 g) = 0.015 W/kg
Maximum value of SAR (measured) = 0.0299 W/kg

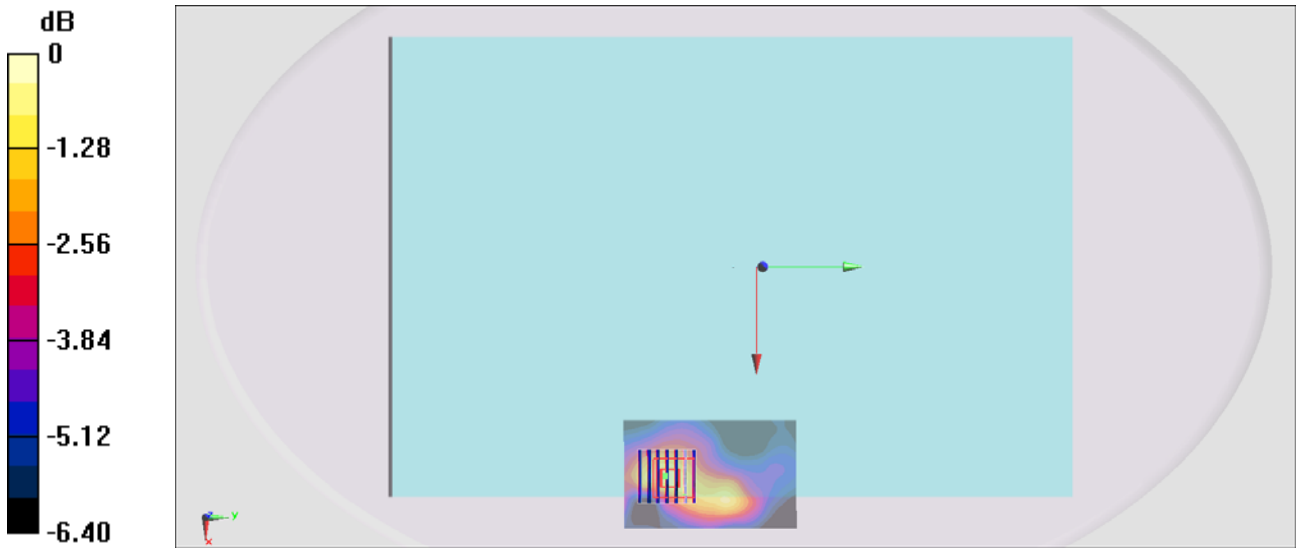

0 dB = 0.0299 W/kg = -15.24 dBW/kg

#11_WLAN2.4GHz_802.11b 1Mbps_Edge 1_0cm_Ch6;Ant 1

Communication System: 802.11b; Frequency: 2437 MHz;Duty Cycle: 1:1
Medium: MSL_2450_131003 Medium parameters used: f = 2437 MHz; σ = 2.001 S/m; ε_r = 53.956; ρ = 1000 kg/m^3
Ambient Temperature：23.6 ℃； Liquid Temperature：22.6 ℃

DASY5 Configuration:
- Probe: ES3DV3 - SN3071; ConvF(4.02, 4.02, 4.02); Calibrated: 2013/6/18;
- Sensor-Surface: 3mm (Mechanical Surface Detection)
- Electronics: DAE4 Sn1279; Calibrated: 2013/1/28
- Phantom: ELI v4.0; Type: QDOVA001BB; Serial: 1173
- Measurement SW: DASY52, Version 52.8 (6); SEMCAD X Version 14.6.9 (7117)

Configuration/Ch6/Area Scan (51x81x1): Interpolated grid: dx=1.200 mm, dy=1.200 mm
Maximum value of SAR (interpolated) = 0.383 W/kg

Configuration/Ch6/Zoom Scan (7x7x7)/Cube 0: Measurement grid: dx=5mm, dy=5mm, dz=5mm
Reference Value = 14.283 V/m; Power Drift = -0.04 dB
Peak SAR (extrapolated) = 0.636 W/kg
SAR(1 g) = 0.280 W/kg; SAR(10 g) = 0.109 W/kg
Maximum value of SAR (measured) = 0.383 W/kg

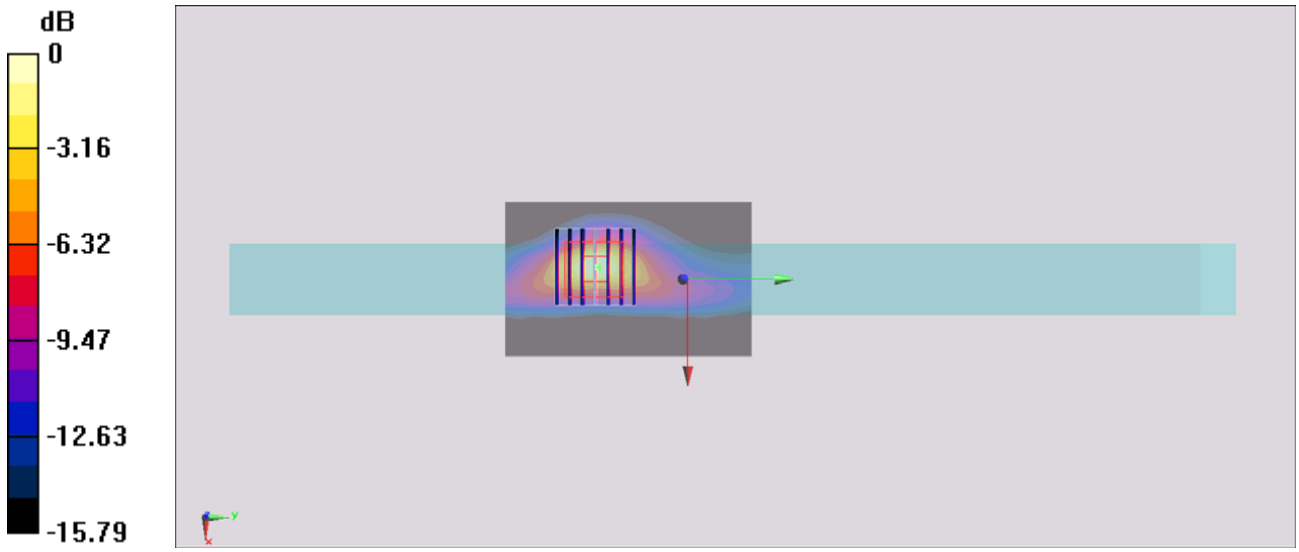

0 dB = 0.383 W/kg = -4.17 dBW/kg

#12_WLAN2.4GHz_802.11b 1Mbps_Bottom_0cm_Ch6;Ant 1

Communication System: 802.11b; Frequency: 2437 MHz;Duty Cycle: 1:1
Medium: MSL_2450_131003 Medium parameters used: f = 2437 MHz; σ = 2.001 S/m; ε_r = 53.956; ρ = 1000 kg/m^3
Ambient Temperature：23.6 ℃; Liquid Temperature：22.6 ℃

DASY5 Configuration:
- Probe: ES3DV3 - SN3071; ConvF(4.02, 4.02, 4.02); Calibrated: 2013/6/18;
- Sensor-Surface: 3mm (Mechanical Surface Detection)
- Electronics: DAE4 Sn1279; Calibrated: 2013/1/28
- Phantom: ELI v4.0; Type: QDOVA001BB; Serial: 1173
- Measurement SW: DASY52, Version 52.8 (6); SEMCAD X Version 14.6.9 (7117)

Configuration/Ch6/Area Scan (51x81x1): Interpolated grid: dx=1.200 mm, dy=1.200 mm
Maximum value of SAR (interpolated) = 0.150 W/kg

Configuration/Ch6/Zoom Scan (7x7x7)/Cube 0: Measurement grid: dx=5mm, dy=5mm, dz=5mm
Reference Value = 9.096 V/m; Power Drift = 0.07 dB
Peak SAR (extrapolated) = 0.254 W/kg
SAR(1 g) = 0.120 W/kg; SAR(10 g) = 0.055 W/kg
Maximum value of SAR (measured) = 0.155 W/kg

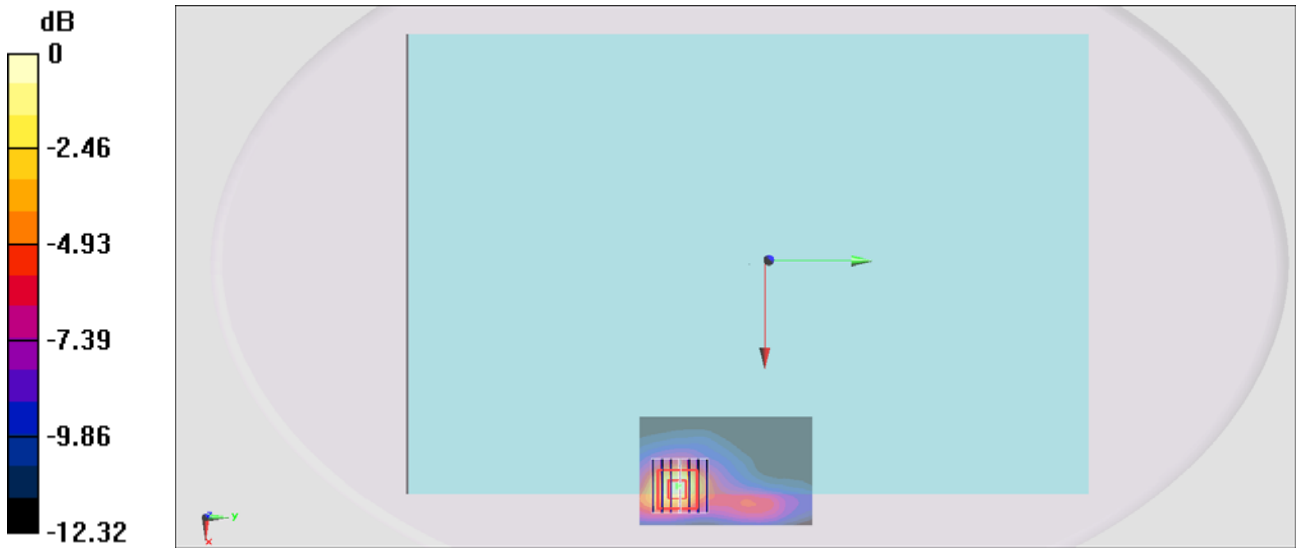

0 dB = 0.155 W/kg = -8.10 dBW/kg

#13_WLAN2.4GHz_802.11g 6Mbps_Edge 1_0cm_Ch6;Ant 1

Communication System: 802.11g; Frequency: 2437 MHz;Duty Cycle: 1:1
Medium: MSL_2450_131003 Medium parameters used: f = 2437 MHz; σ = 2.001 S/m; ε_r = 53.956; ρ = 1000 kg/m^3
Ambient Temperature：23.6 ℃; Liquid Temperature：22.6 ℃

DASY5 Configuration:
- Probe: ES3DV3 - SN3071; ConvF(4.02, 4.02, 4.02); Calibrated: 2013/6/18;
- Sensor-Surface: 3mm (Mechanical Surface Detection)
- Electronics: DAE4 Sn1279; Calibrated: 2013/1/28
- Phantom: ELI v4.0; Type: QDOVA001BB; Serial: 1173
- Measurement SW: DASY52, Version 52.8 (6); SEMCAD X Version 14.6.9 (7117)

Configuration/Ch6/Area Scan (51x81x1): Interpolated grid: dx=1.200 mm, dy=1.200 mm
Maximum value of SAR (interpolated) = 0.478 W/kg

Configuration/Ch6/Zoom Scan (7x7x7)/Cube 0: Measurement grid: dx=5mm, dy=5mm, dz=5mm
Reference Value = 15.944 V/m; Power Drift = -0.02 dB
Peak SAR (extrapolated) = 0.788 W/kg
SAR(1 g) = 0.347 W/kg; SAR(10 g) = 0.133 W/kg
Maximum value of SAR (measured) = 0.476 W/kg

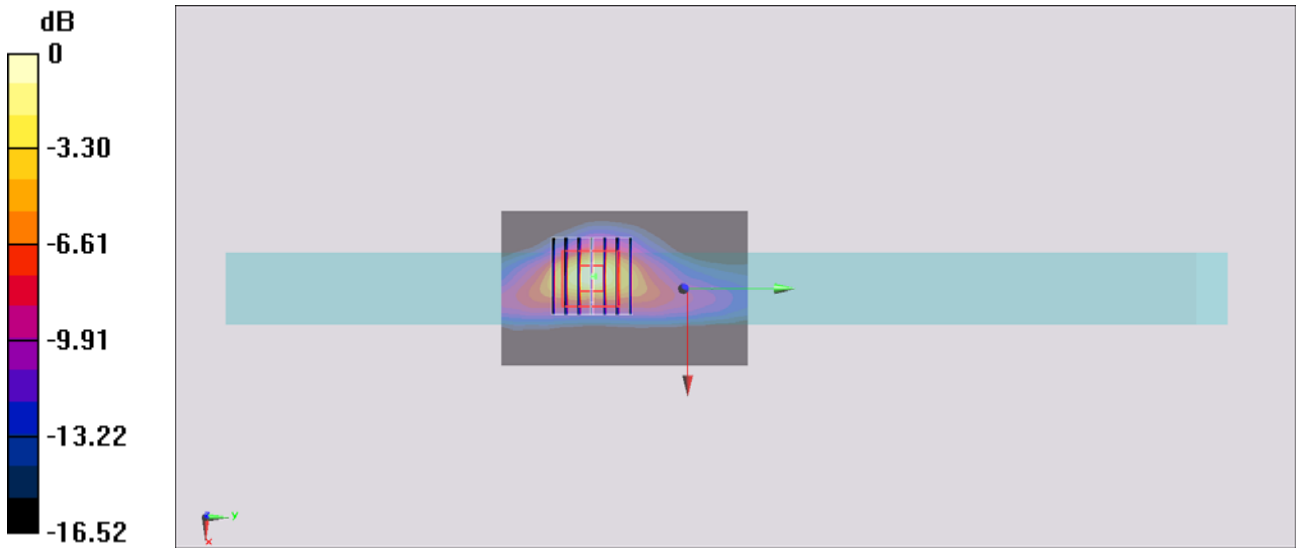

0 dB = 0.476 W/kg = -3.22 dBW/kg

#14_WLAN2.4GHz_802.11n-HT20 MCS0_Edge 1_0cm_Ch6;Ant 1

Communication System: 802.11n; Frequency: 2437 MHz;Duty Cycle: 1:1
Medium: MSL_2450_131003 Medium parameters used: f = 2437 MHz; σ = 2.001 S/m; ε_r = 53.956; ρ = 1000 kg/m^3
Ambient Temperature：23.6 ℃; Liquid Temperature：22.6 ℃

DASY5 Configuration:
- Probe: ES3DV3 - SN3071; ConvF(4.02, 4.02, 4.02); Calibrated: 2013/6/18;
- Sensor-Surface: 3mm (Mechanical Surface Detection)
- Electronics: DAE4 Sn1279; Calibrated: 2013/1/28
- Phantom: ELI v4.0; Type: QDOVA001BB; Serial: 1173
- Measurement SW: DASY52, Version 52.8 (6); SEMCAD X Version 14.6.9 (7117)

Configuration/Ch6/Area Scan (51x81x1): Interpolated grid: dx=1.200 mm, dy=1.200 mm
Maximum value of SAR (interpolated) = 0.520 W/kg

Configuration/Ch6/Zoom Scan (7x7x7)/Cube 0: Measurement grid: dx=5mm, dy=5mm, dz=5mm
Reference Value = 16.626 V/m; Power Drift = -0.01 dB
Peak SAR (extrapolated) = 0.851 W/kg
SAR(1 g) = 0.378 W/kg; SAR(10 g) = 0.145 W/kg
Maximum value of SAR (measured) = 0.518 W/kg

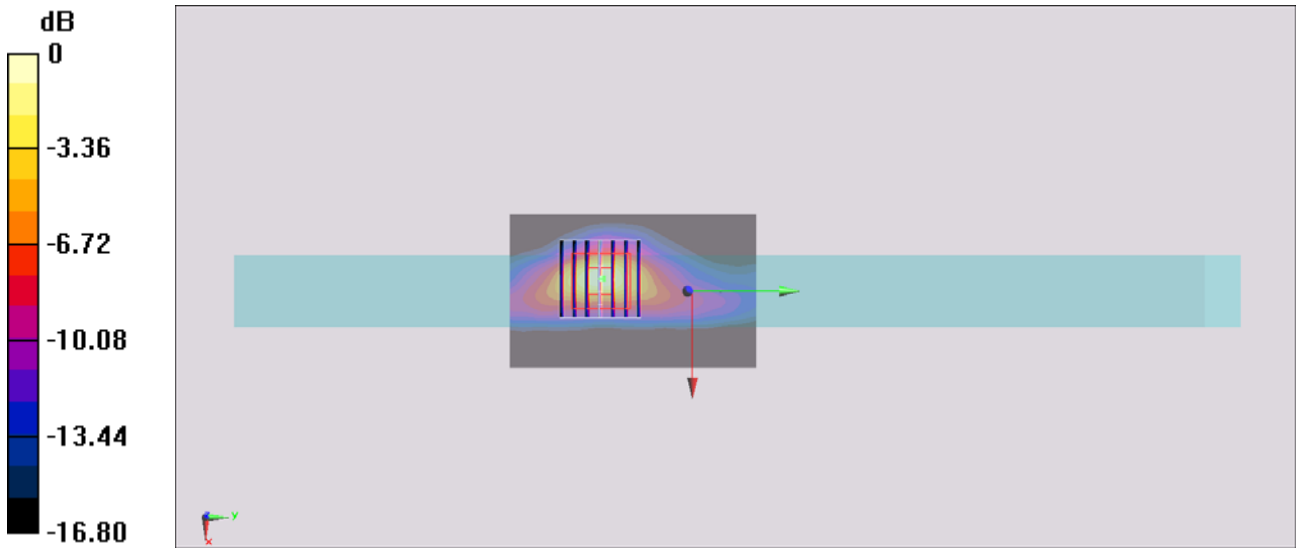

0 dB = 0.518 W/kg = -2.86 dBW/kg

Calibration Laboratory of
Schmid & Partner
Engineering AG
Zeughausstrasse 43, 8004 Zurich, Switzerland

S Schweizerischer Kalibrierdienst
C Service suisse d'étalonnage
Servizio svizzero di taratura
S Swiss Calibration Service

Accredited by the Swiss Accreditation Service (SAS)
The Swiss Accreditation Service is one of the signatories to the EA Multilateral Agreement for the recognition of calibration certificates

Accreditation No.: SCS 108

Client **Sporton-TW (Auden)**

Certificate No: D2450V2-736_Aug13

CALIBRATION CERTIFICATE

Object	D2450V2 - SN: 736
Calibration procedure(s)	QA CAL-05.v9 Calibration procedure for dipole validation kits above 700 MHz
Calibration date:	August 23, 2013

This calibration certificate documents the traceability to national standards, which realize the physical units of measurements (SI).
The measurements and the uncertainties with confidence probability are given on the following pages and are part of the certificate.

All calibrations have been conducted in the closed laboratory facility: environment temperature (22 ± 3)°C and humidity < 70%.

Calibration Equipment used (M&TE critical for calibration)

Primary Standards	ID #	Cal Date (Certificate No.)	Scheduled Calibration
Power meter EPM-442A	GB37480704	01-Nov-12 (No. 217-01640)	Oct-13
Power sensor HP 8481A	US37292783	01-Nov-12 (No. 217-01640)	Oct-13
Reference 20 dB Attenuator	SN: 5058 (20k)	04-Apr-13 (No. 217-01736)	Apr-14
Type-N mismatch combination	SN: 5047.3 / 06327	04-Apr-13 (No. 217-01739)	Apr-14
Reference Probe ES3DV3	SN: 3205	28-Dec-12 (No. ES3-3205_Dec12)	Dec-13
DAE4	SN: 601	25-Apr-13 (No. DAE4-601_Apr13)	Apr-14

Secondary Standards	ID #	Check Date (in house)	Scheduled Check
Power sensor HP 8481A	MY41092317	18-Oct-02 (in house check Oct-11)	In house check: Oct-13
RF generator R&S SMT-06	100005	04-Aug-99 (in house check Oct-11)	In house check: Oct-13
Network Analyzer HP 8753E	US37390585 S4206	18-Oct-01 (in house check Oct-12)	In house check: Oct-13

	Name	Function	Signature
Calibrated by:	Jeton Kastrati	Laboratory Technician	
Approved by:	Katja Pokovic	Technical Manager	

Issued: August 23, 2013

This calibration certificate shall not be reproduced except in full without written approval of the laboratory.

Glossary:

TSL	tissue simulating liquid
ConvF	sensitivity in TSL / NORM x,y,z
N/A	not applicable or not measured

Calibration is Performed According to the Following Standards:

a) IEEE Std 1528-2003, "IEEE Recommended Practice for Determining the Peak Spatial-Averaged Specific Absorption Rate (SAR) in the Human Head from Wireless Communications Devices: Measurement Techniques", December 2003
b) IEC 62209-1, "Procedure to measure the Specific Absorption Rate (SAR) for hand-held devices used in close proximity to the ear (frequency range of 300 MHz to 3 GHz)", February 2005
c) KDB 865664, "SAR Measurement Requirements for 100 MHz to 6 GHz"

Additional Documentation:

d) DASY4/5 System Handbook

Methods Applied and Interpretation of Parameters:

- *Measurement Conditions:* Further details are available from the Validation Report at the end of the certificate. All figures stated in the certificate are valid at the frequency indicated.
- *Antenna Parameters with TSL:* The dipole is mounted with the spacer to position its feed point exactly below the center marking of the flat phantom section, with the arms oriented parallel to the body axis.
- *Feed Point Impedance and Return Loss:* These parameters are measured with the dipole positioned under the liquid filled phantom. The impedance stated is transformed from the measurement at the SMA connector to the feed point. The Return Loss ensures low reflected power. No uncertainty required.
- *Electrical Delay:* One-way delay between the SMA connector and the antenna feed point. No uncertainty required.
- *SAR measured:* SAR measured at the stated antenna input power.
- *SAR normalized:* SAR as measured, normalized to an input power of 1 W at the antenna connector.
- *SAR for nominal TSL parameters:* The measured TSL parameters are used to calculate the nominal SAR result.

The reported uncertainty of measurement is stated as the standard uncertainty of measurement multiplied by the coverage factor k=2, which for a normal distribution corresponds to a coverage probability of approximately 95%.

Measurement Conditions

DASY system configuration, as far as not given on page 1.

DASY Version	DASY5	V52.8.7
Extrapolation	Advanced Extrapolation	
Phantom	Modular Flat Phantom	
Distance Dipole Center - TSL	10 mm	with Spacer
Zoom Scan Resolution	dx, dy, dz = 5 mm	
Frequency	2450 MHz ± 1 MHz	

Head TSL parameters

The following parameters and calculations were applied.

	Temperature	**Permittivity**	**Conductivity**
Nominal Head TSL parameters	22.0 °C	39.2	1.80 mho/m
Measured Head TSL parameters	(22.0 ± 0.2) °C	37.8 ± 6 %	1.80 mho/m ± 6 %
Head TSL temperature change during test	< 0.5 °C	----	----

SAR result with Head TSL

SAR averaged over 1 cm^3 (1 g) of Head TSL	Condition	
SAR measured	250 mW input power	13.4 W/kg
SAR for nominal Head TSL parameters	normalized to 1W	**53.2 W/kg ± 17.0 % (k=2)**

SAR averaged over 10 cm^3 (10 g) of Head TSL	condition	
SAR measured	250 mW input power	6.23 W/kg
SAR for nominal Head TSL parameters	normalized to 1W	**24.8 W/kg ± 16.5 % (k=2)**

Body TSL parameters

The following parameters and calculations were applied.

	Temperature	**Permittivity**	**Conductivity**
Nominal Body TSL parameters	22.0 °C	52.7	1.95 mho/m
Measured Body TSL parameters	(22.0 ± 0.2) °C	50.6 ± 6 %	2.03 mho/m ± 6 %
Body TSL temperature change during test	< 0.5 °C	----	----

SAR result with Body TSL

SAR averaged over 1 cm^3 (1 g) of Body TSL	Condition	
SAR measured	250 mW input power	13.2 W/kg
SAR for nominal Body TSL parameters	normalized to 1W	**51.3 W/kg ± 17.0 % (k=2)**

SAR averaged over 10 cm^3 (10 g) of Body TSL	condition	
SAR measured	250 mW input power	6.12 W/kg
SAR for nominal Body TSL parameters	normalized to 1W	**24.1 W/kg ± 16.5 % (k=2)**

Appendix

Antenna Parameters with Head TSL

Impedance, transformed to feed point	54.4 Ω + 1.8 jΩ
Return Loss	- 26.8 dB

Antenna Parameters with Body TSL

Impedance, transformed to feed point	51.6 Ω + 4.2 jΩ
Return Loss	- 27.0 dB

General Antenna Parameters and Design

Electrical Delay (one direction)	1.157 ns

After long term use with 100W radiated power, only a slight warming of the dipole near the feedpoint can be measured.

The dipole is made of standard semirigid coaxial cable. The center conductor of the feeding line is directly connected to the second arm of the dipole. The antenna is therefore short-circuited for DC-signals. On some of the dipoles, small end caps are added to the dipole arms in order to improve matching when loaded according to the position as explained in the "Measurement Conditions" paragraph. The SAR data are not affected by this change. The overall dipole length is still according to the Standard.
No excessive force must be applied to the dipole arms, because they might bend or the soldered connections near the feedpoint may be damaged.

Additional EUT Data

Manufactured by	SPEAG
Manufactured on	August 26, 2003

DASY5 Validation Report for Head TSL

Date: 22.08.2013

Test Laboratory: SPEAG, Zurich, Switzerland

DUT: Dipole 2450 MHz; Type: D2450V2; Serial: D2450V2 - SN: 736

Communication System: UID 0 - CW ; Frequency: 2450 MHz
Medium parameters used: f = 2450 MHz; σ = 1.8 S/m; ε_r = 37.8; ρ = 1000 kg/m^3
Phantom section: Flat Section
Measurement Standard: DASY5 (IEEE/IEC/ANSI C63.19-2007)

DASY52 Configuration:

- Probe: ES3DV3 - SN3205; ConvF(4.52, 4.52, 4.52); Calibrated: 28.12.2012;
- Sensor-Surface: 3mm (Mechanical Surface Detection)
- Electronics: DAE4 Sn601; Calibrated: 25.04.2013
- Phantom: Flat Phantom 5.0 (front); Type: QD000P50AA; Serial: 1001
- DASY52 52.8.7(1137); SEMCAD X 14.6.10(7164)

Dipole Calibration for Head Tissue/Pin=250 mW, d=10mm/Zoom Scan (7x7x7)/Cube 0:

Measurement grid: dx=5mm, dy=5mm, dz=5mm
Reference Value = 100.5 V/m; Power Drift = 0.05 dB
Peak SAR (extrapolated) = 28.0 W/kg
SAR(1 g) = 13.4 W/kg; SAR(10 g) = 6.23 W/kg
Maximum value of SAR (measured) = 17.0 W/kg

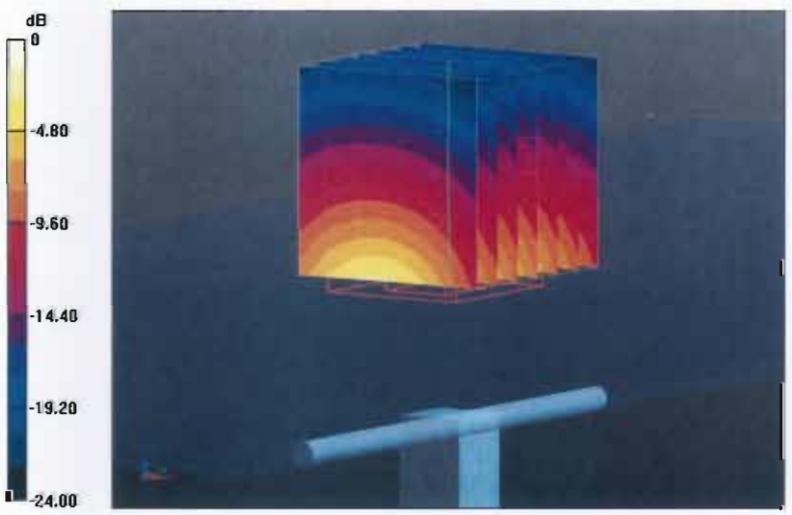

0 dB = 17.0 W/kg = 12.30 dBW/kg

Impedance Measurement Plot for Head TSL

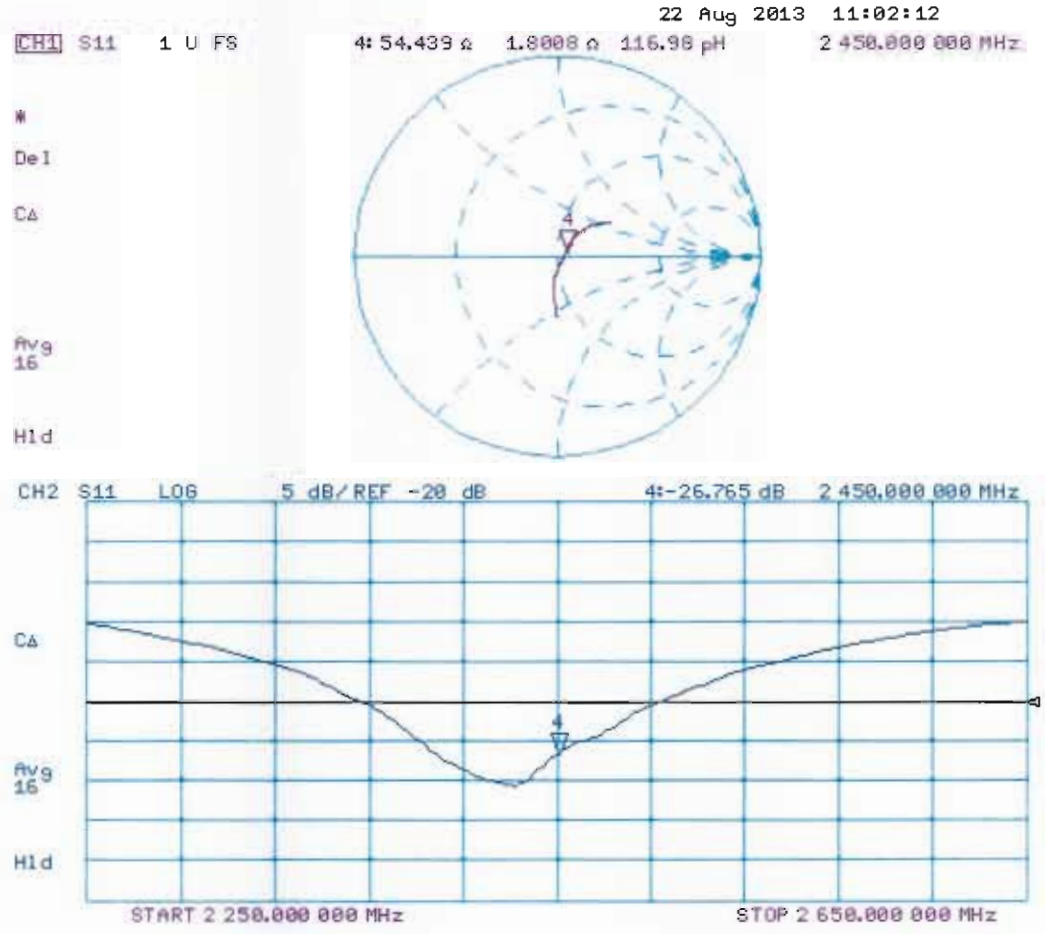

DASY5 Validation Report for Body TSL

Date: 23.08.2013

Test Laboratory: SPEAG, Zurich, Switzerland

DUT: Dipole 2450 MHz; Type: D2450V2; Serial: D2450V2 - SN: 736

Communication System: UID 0 - CW ; Frequency: 2450 MHz
Medium parameters used: f = 2450 MHz; σ = 2.03 S/m; ε_r = 50.6; ρ = 1000 kg/m^3
Phantom section: Flat Section
Measurement Standard: DASY5 (IEEE/IEC/ANSI C63.19-2007)

DASY52 Configuration:

- Probe: ES3DV3 - SN3205; ConvF(4.42, 4.42, 4.42); Calibrated: 28.12.2012;
- Sensor-Surface: 3mm (Mechanical Surface Detection)
- Electronics: DAE4 Sn601; Calibrated: 25.04.2013
- Phantom: Flat Phantom 5.0 (back); Type: QD000P50AA; Serial: 1002
- DASY52 52.8.7(1137); SEMCAD X 14.6.10(7164)

Dipole Calibration for Body Tissue/Pin=250 mW, d=10mm/Zoom Scan (7x7x7)/Cube 0:

Measurement grid: dx=5mm, dy=5mm, dz=5mm
Reference Value = 95.103 V/m; Power Drift = 0.05 dB
Peak SAR (extrapolated) = 27.8 W/kg
SAR(1 g) = 13.2 W/kg; SAR(10 g) = 6.12 W/kg
Maximum value of SAR (measured) = 17.2 W/kg

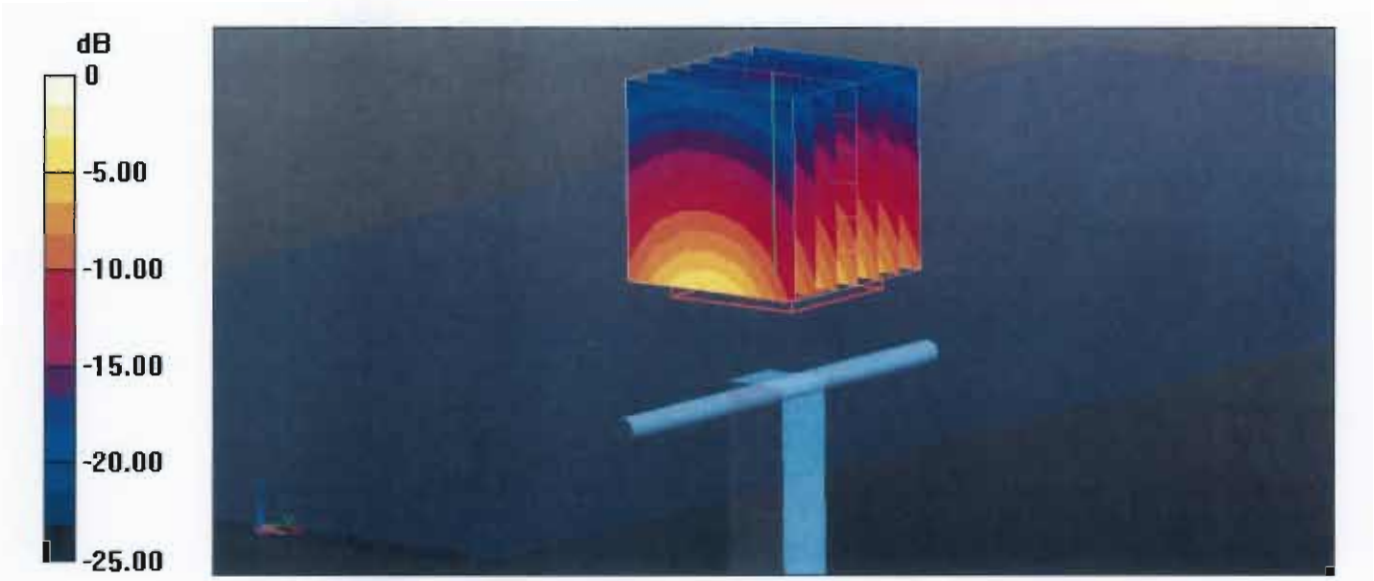

0 dB = 17.2 W/kg = 12.36 dBW/kg

Impedance Measurement Plot for Body TSL

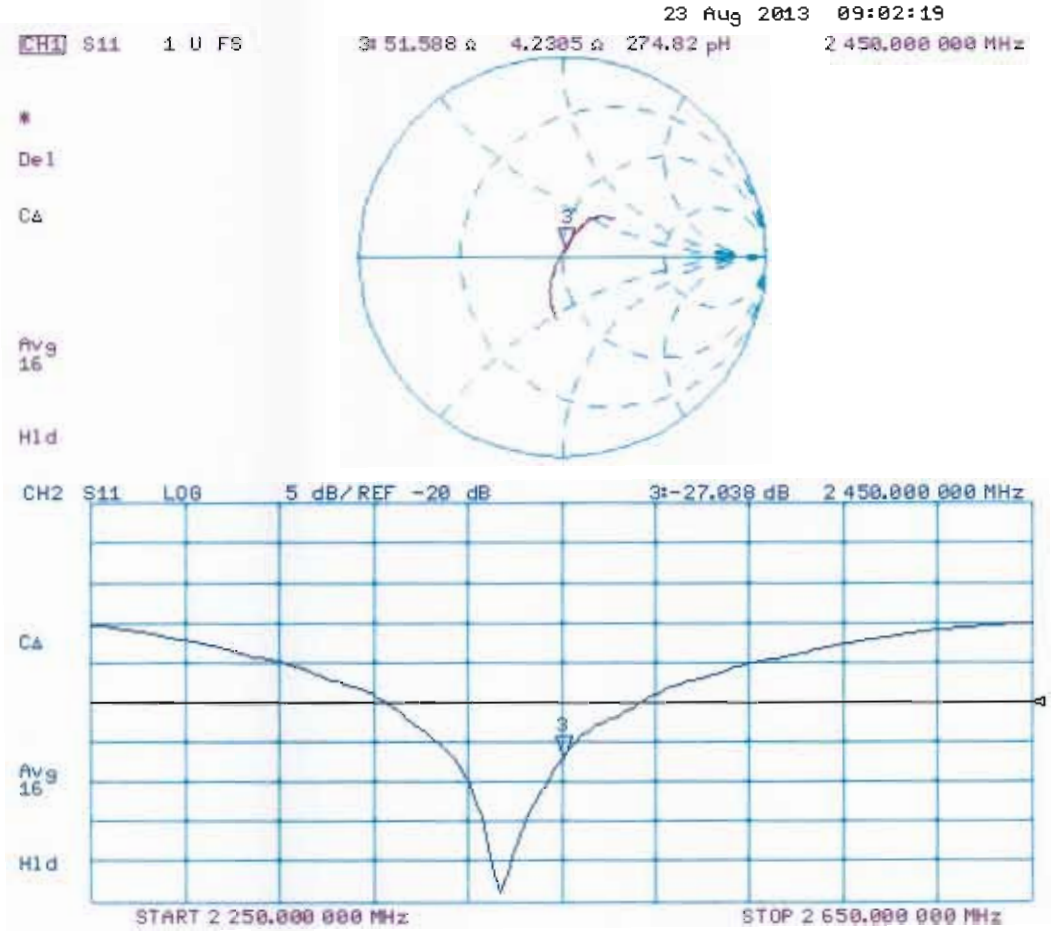

Calibration Laboratory of
Schmid & Partner
Engineering AG
Zeughausstrasse 43, 8004 Zurich, Switzerland

S Schweizerischer Kalibrierdienst
C Service suisse d'étalonnage
Servizio svizzero di taratura
S Swiss Calibration Service

Accredited by the Swiss Accreditation Service (SAS)
The Swiss Accreditation Service is one of the signatories to the EA Multilateral Agreement for the recognition of calibration certificates

Accreditation No.: SCS 108

Client **Sporton (Auden)**

Certificate No: DAE4-1279_Jan13

CALIBRATION CERTIFICATE

Object	DAE4 - SD 000 D04 BJ - SN: 1279
Calibration procedure(s)	QA CAL-06.v25 Calibration procedure for the data acquisition electronics (DAE)
Calibration date:	January 28, 2013

This calibration certificate documents the traceability to national standards, which realize the physical units of measurements (SI).
The measurements and the uncertainties with confidence probability are given on the following pages and are part of the certificate.

All calibrations have been conducted in the closed laboratory facility: environment temperature (22 ± 3)°C and humidity < 70%.

Calibration Equipment used (M&TE critical for calibration)

Primary Standards	ID #	Cal Date (Certificate No.)	Scheduled Calibration
Keithley Multimeter Type 2001	SN: 0810278	02-Oct-12 (No:12728)	Oct-13
Secondary Standards	**ID #**	**Check Date (in house)**	**Scheduled Check**
Auto DAE Calibration Unit	SE UWS 053 AA 1001	07-Jan-13 (in house check)	In house check: Jan-14
Calibrator Box V2.1	SE UMS 006 AA 1002	07-Jan-13 (in house check)	In house check: Jan-14

	Name	Function	Signature
Calibrated by:	R.Mayoraz	Technician	R. Mayoraz
Approved by:	Fin Bomholt	Deputy Technical Manager	F. Bomholt

Issued: January 28, 2013

This calibration certificate shall not be reproduced except in full without written approval of the laboratory.

Glossary

DAE	data acquisition electronics
Connector angle	information used in DASY system to align probe sensor X to the robot coordinate system.

Methods Applied and Interpretation of Parameters

- *DC Voltage Measurement:* Calibration Factor assessed for use in DASY system by comparison with a calibrated instrument traceable to national standards. The figure given corresponds to the full scale range of the voltmeter in the respective range.
- *Connector angle*: The angle of the connector is assessed measuring the angle mechanically by a tool inserted. Uncertainty is not required.
- The following parameters as documented in the Appendix contain technical information as a result from the performance test and require no uncertainty.
  - *DC Voltage Measurement Linearity:* Verification of the Linearity at +10% and -10% of the nominal calibration voltage. Influence of offset voltage is included in this measurement.
  - *Common mode sensitivity:* Influence of a positive or negative common mode voltage on the differential measurement.
  - *Channel separation:* Influence of a voltage on the neighbor channels not subject to an input voltage.
  - *AD Converter Values with inputs shorted:* Values on the internal AD converter corresponding to zero input voltage
  - *Input Offset Measurement*: Output voltage and statistical results over a large number of zero voltage measurements.
  - *Input Offset Current:* Typical value for information; Maximum channel input offset current, not considering the input resistance.
  - *Input resistance:* Typical value for information: DAE input resistance at the connector, during internal auto-zeroing and during measurement.
  - *Low Battery Alarm Voltage:* Typical value for information. Below this voltage, a battery alarm signal is generated.
  - *Power consumption:* Typical value for information. Supply currents in various operating modes.

DC Voltage Measurement

A/D - Converter Resolution nominal

High Range:	1LSB =	6.1μV ,	full range =	-100...+300 mV
Low Range:	1LSB =	61nV ,	full range =	-1.....+3mV

DASY measurement parameters: Auto Zero Time: 3 sec; Measuring time: 3 sec

Calibration Factors	X	Y	Z
High Range	405.158 ± 0.02% (k=2)	404.952 ± 0.02% (k=2)	404.290 ± 0.02% (k=2)
Low Range	3.98094 ± 1.55% (k=2)	3.97626 ± 1.55% (k=2)	4.00118 ± 1.55% (k=2)

Connector Angle

Connector Angle to be used in DASY system	333.5 ° ± 1 °

Appendix

1. DC Voltage Linearity

High Range		Reading (μV)	Difference (μV)	Error (%)
Channel X	+ Input	199996.47	1.09	0.00
Channel X	+ Input	20003.76	2.93	0.01
Channel X	- Input	-19999.36	0.88	-0.00
Channel Y	+ Input	199994.58	-0.65	-0.00
Channel Y	+ Input	20001.07	0.39	0.00
Channel Y	- Input	-20001.20	-0.68	0.00
Channel Z	+ Input	199998.63	3.51	0.00
Channel Z	+ Input	20002.19	1.53	0.01
Channel Z	- Input	-20001.69	-1.19	0.01

Low Range		Reading (μV)	Difference (μV)	Error (%)
Channel X	+ Input	2001.94	0.86	0.04
Channel X	+ Input	200.87	-0.55	-0.27
Channel X	- Input	-198.32	0.30	-0.15
Channel Y	+ Input	2001.04	0.08	0.00
Channel Y	+ Input	201.54	0.20	0.10
Channel Y	- Input	-198.41	0.21	-0.10
Channel Z	+ Input	2000.79	-0.09	-0.00
Channel Z	+ Input	200.22	-0.99	-0.49
Channel Z	- Input	-199.65	-0.88	0.44

2. Common mode sensitivity

DASY measurement parameters: Auto Zero Time: 3 sec; Measuring time: 3 sec

	Common mode Input Voltage (mV)	High Range Average Reading (μV)	Low Range Average Reading (μV)
Channel X	200	18.03	16.81
	- 200	-15.22	-17.01
Channel Y	200	8.11	8.20
	- 200	-9.46	-9.57
Channel Z	200	-1.17	-1.31
	- 200	-0.74	-0.94

3. Channel separation

DASY measurement parameters: Auto Zero Time: 3 sec; Measuring time: 3 sec

	Input Voltage (mV)	Channel X (μV)	Channel Y (μV)	Channel Z (μV)
Channel X	200	-	2.26	-3.75
Channel Y	200	8.26	-	3.07
Channel Z	200	9.62	5.76	-

4. AD-Converter Values with inputs shorted

DASY measurement parameters: Auto Zero Time: 3 sec; Measuring time: 3 sec

	High Range (LSB)	Low Range (LSB)
Channel X	15672	15869
Channel Y	16456	16271
Channel Z	15940	17304

5. Input Offset Measurement

DASY measurement parameters: Auto Zero Time: 3 sec; Measuring time: 3 sec
Input 10MΩ

	Average (μV)	min. Offset (μV)	max. Offset (μV)	Std. Deviation (μV)
Channel X	3.57	2.24	4.78	0.51
Channel Y	-1.43	-3.30	0.43	0.71
Channel Z	0.74	-0.47	2.10	0.53

6. Input Offset Current

Nominal Input circuitry offset current on all channels: <25fA

7. Input Resistance (Typical values for information)

	Zeroing (kOhm)	Measuring (MOhm)
Channel X	200	200
Channel Y	200	200
Channel Z	200	200

8. Low Battery Alarm Voltage (Typical values for information)

Typical values	Alarm Level (VDC)
Supply (+ Vcc)	+7.9
Supply (- Vcc)	-7.6

9. Power Consumption (Typical values for information)

Typical values	Switched off (mA)	Stand by (mA)	Transmitting (mA)
Supply (+ Vcc)	+0.01	+6	+14
Supply (- Vcc)	–0.01	-8	-9

Calibration Laboratory of
Schmid & Partner
Engineering AG
Zeughausstrasse 43, 8004 Zurich, Switzerland

S Schweizerischer Kalibrierdienst
C Service suisse d'étalonnage
S Servizio svizzero di taratura
Swiss Calibration Service

Accredited by the Swiss Accreditation Service (SAS)
The Swiss Accreditation Service is one of the signatories to the EA Multilateral Agreement for the recognition of calibration certificates

Accreditation No.: SCS 108

Client **Auden**

Certificate No: **ES3-3071_Jun13**

CALIBRATION CERTIFICATE

Object	ES3DV3 - SN:3071
Calibration procedure(s)	QA CAL-01.v8, QA CAL-23.v4, QA CAL-25.v4 Calibration procedure for dosimetric E-field probes
Calibration date:	June 18, 2013

This calibration certificate documents the traceability to national standards, which realize the physical units of measurements (SI).
The measurements and the uncertainties with confidence probability are given on the following pages and are part of the certificate.

All calibrations have been conducted in the closed laboratory facility: environment temperature (22 ± 3)°C and humidity < 70%.

Calibration Equipment used (M&TE critical for calibration)

Primary Standards	ID	Cal Date (Certificate No.)	Scheduled Calibration
Power meter E4419B	GB41293874	04-Apr-13 (No. 217-01733)	Apr-14
Power sensor E4412A	MY41498087	04-Apr-13 (No. 217-01733)	Apr-14
Reference 3 dB Attenuator	SN: S5054 (3c)	04-Apr-13 (No. 217-01737)	Apr-14
Reference 20 dB Attenuator	SN: S5277 (20x)	04-Apr-13 (No. 217-01735)	Apr-14
Reference 30 dB Attenuator	SN: S5129 (30b)	04-Apr-13 (No. 217-01738)	Apr-14
Reference Probe ES3DV2	SN: 3013	28-Dec-12 (No. ES3-3013_Dec12)	Dec-13
DAE4	SN: 660	31-Jan-13 (No. DAE4-660_Jan13)	Jan-14
Secondary Standards	ID	Check Date (in house)	Scheduled Check
RF generator HP 8648C	US3642U01700	4-Aug-99 (in house check Apr-13)	In house check: Apr-15
Network Analyzer HP 8753E	US37390585	18-Oct-01 (in house check Oct-12)	In house check: Oct-13

	Name	Function	Signature
Calibrated by:	Israe El-Naouq	Laboratory Technician	Israe El-Naouq
Approved by:	Katja Pokovic	Technical Manager	

Issued: June 19, 2013

This calibration certificate shall not be reproduced except in full without written approval of the laboratory.

Glossary:

TSL	tissue simulating liquid
NORMx,y,z	sensitivity in free space
ConvF	sensitivity in TSL / NORMx,y,z
DCP	diode compression point
CF	crest factor (1/duty_cycle) of the RF signal
A, B, C, D	modulation dependent linearization parameters
Polarization φ	φ rotation around probe axis
Polarization ϑ	ϑ rotation around an axis that is in the plane normal to probe axis (at measurement center), i.e., ϑ = 0 is normal to probe axis

Calibration is Performed According to the Following Standards:

a) IEEE Std 1528-2003, "IEEE Recommended Practice for Determining the Peak Spatial-Averaged Specific Absorption Rate (SAR) in the Human Head from Wireless Communications Devices: Measurement Techniques", December 2003
b) IEC 62209-1, "Procedure to measure the Specific Absorption Rate (SAR) for hand-held devices used in close proximity to the ear (frequency range of 300 MHz to 3 GHz)", February 2005

Methods Applied and Interpretation of Parameters:

- *NORMx,y,z:* Assessed for E-field polarization ϑ = 0 (f ≤ 900 MHz in TEM-cell; f > 1800 MHz: R22 waveguide). NORMx,y,z are only intermediate values, i.e., the uncertainties of NORMx,y,z does not affect the E^2-field uncertainty inside TSL (see below *ConvF*).
- *NORM(f)x,y,z = NORMx,y,z * frequency_response* (see Frequency Response Chart). This linearization is implemented in DASY4 software versions later than 4.2. The uncertainty of the frequency response is included in the stated uncertainty of *ConvF*.
- *DCPx,y,z:* DCP are numerical linearization parameters assessed based on the data of power sweep with CW signal (no uncertainty required). DCP does not depend on frequency nor media.
- *PAR:* PAR is the Peak to Average Ratio that is not calibrated but determined based on the signal characteristics
- *Ax,y,z; Bx,y,z; Cx,y,z; Dx,y,z; VRx,y,z: A, B, C, D* are numerical linearization parameters assessed based on the data of power sweep for specific modulation signal. The parameters do not depend on frequency nor media. *VR* is the maximum calibration range expressed in RMS voltage across the diode.
- *ConvF and Boundary Effect Parameters:* Assessed in flat phantom using E-field (or Temperature Transfer Standard for f ≤ 800 MHz) and inside waveguide using analytical field distributions based on power measurements for f > 800 MHz. The same setups are used for assessment of the parameters applied for boundary compensation (alpha, depth) of which typical uncertainty values are given. These parameters are used in DASY4 software to improve probe accuracy close to the boundary. The sensitivity in TSL corresponds to *NORMx,y,z * ConvF* whereby the uncertainty corresponds to that given for *ConvF*. A frequency dependent *ConvF* is used in DASY version 4.4 and higher which allows extending the validity from ± 50 MHz to ± 100 MHz.
- *Spherical isotropy (3D deviation from isotropy)*: in a field of low gradients realized using a flat phantom exposed by a patch antenna.
- *Sensor Offset*: The sensor offset corresponds to the offset of virtual measurement center from the probe tip (on probe axis). No tolerance required.

Probe ES3DV3

SN:3071

Manufactured: December 14, 2004
Calibrated: June 18, 2013

Calibrated for DASY/EASY Systems
(Note: non-compatible with DASY2 system!)

DASY/EASY - Parameters of Probe: ES3DV3 - SN:3071

Basic Calibration Parameters

	Sensor X	Sensor Y	Sensor Z	Unc (k=2)
Norm ($\mu V/(V/m)^2$)[A]	1.12	1.21	0.96	± 10.1 %
DCP (mV)[B]	100.7	101.8	101.2	

Modulation Calibration Parameters

UID	Communication System Name		A dB	B dB√μV	C	D dB	VR mV	Unc[E] (k=2)
0	CW	X	0.0	0.0	1.0	0.00	195.2	±3.5 %
		Y	0.0	0.0	1.0		157.1	
		Z	0.0	0.0	1.0		184.5	

The reported uncertainty of measurement is stated as the standard uncertainty of measurement multiplied by the coverage factor k=2, which for a normal distribution corresponds to a coverage probability of approximately 95%.

[A] The uncertainties of NormX,Y,Z do not affect the E^2-field uncertainty inside TSL (see Pages 5 and 6).
[B] Numerical linearization parameter: uncertainty not required.
[E] Uncertainty is determined using the max. deviation from linear response applying rectangular distribution and is expressed for the square of the field value.

DASY/EASY - Parameters of Probe: ES3DV3 - SN:3071

Calibration Parameter Determined in Head Tissue Simulating Media

f (MHz) [C]	Relative Permittivity [F]	Conductivity (S/m) [F]	ConvF X	ConvF Y	ConvF Z	Alpha	Depth (mm)	Unct. (k=2)
750	41.9	0.89	6.10	6.10	6.10	0.54	1.41	± 12.0 %
835	41.5	0.90	5.88	5.88	5.88	0.45	1.50	± 12.0 %
900	41.5	0.97	5.74	5.74	5.74	0.36	1.75	± 12.0 %
1450	40.5	1.20	5.03	5.03	5.03	0.26	2.25	± 12.0 %
1750	40.1	1.37	4.97	4.97	4.97	0.43	1.66	± 12.0 %
1900	40.0	1.40	4.74	4.74	4.74	0.52	1.51	± 12.0 %
2000	40.0	1.40	4.83	4.83	4.83	0.80	1.12	± 12.0 %
2450	39.2	1.80	4.18	4.18	4.18	0.67	1.28	± 12.0 %

[C] Frequency validity of ± 100 MHz only applies for DASY v4.4 and higher (see Page 2), else it is restricted to ± 50 MHz. The uncertainty is the RSS of the ConvF uncertainty at calibration frequency and the uncertainty for the indicated frequency band.
[F] At frequencies below 3 GHz, the validity of tissue parameters (ε and σ) can be relaxed to ± 10% if liquid compensation formula is applied to measured SAR values. At frequencies above 3 GHz, the validity of tissue parameters (ε and σ) is restricted to ± 5%. The uncertainty is the RSS of the ConvF uncertainty for indicated target tissue parameters.

DASY/EASY - Parameters of Probe: ES3DV3 - SN:3071

Calibration Parameter Determined in Body Tissue Simulating Media

f (MHz) [C]	Relative Permittivity [F]	Conductivity (S/m) [F]	ConvF X	ConvF Y	ConvF Z	Alpha	Depth (mm)	Unct. (k=2)
750	55.5	0.96	5.88	5.88	5.88	0.44	1.53	± 12.0 %
835	55.2	0.97	5.80	5.80	5.80	0.70	1.26	± 12.0 %
900	55.0	1.05	5.74	5.74	5.74	0.54	1.45	± 12.0 %
1450	54.0	1.30	5.06	5.06	5.06	0.25	2.87	± 12.0 %
1750	53.4	1.49	4.49	4.49	4.49	0.35	3.00	± 12.0 %
1900	53.3	1.52	4.29	4.29	4.29	0.34	2.45	± 12.0 %
2000	53.3	1.52	4.33	4.33	4.33	0.39	2.22	± 12.0 %
2450	52.7	1.95	4.02	4.02	4.02	0.80	1.20	± 12.0 %

[C] Frequency validity of ± 100 MHz only applies for DASY v4.4 and higher (see Page 2), else it is restricted to ± 50 MHz. The uncertainty is the RSS of the ConvF uncertainty at calibration frequency and the uncertainty for the indicated frequency band.
[F] At frequencies below 3 GHz, the validity of tissue parameters (ε and σ) can be relaxed to ± 10% if liquid compensation formula is applied to measured SAR values. At frequencies above 3 GHz, the validity of tissue parameters (ε and σ) is restricted to ± 5%. The uncertainty is the RSS of the ConvF uncertainty for indicated target tissue parameters.

Frequency Response of E-Field

(TEM-Cell:ifi110 EXX, Waveguide: R22)

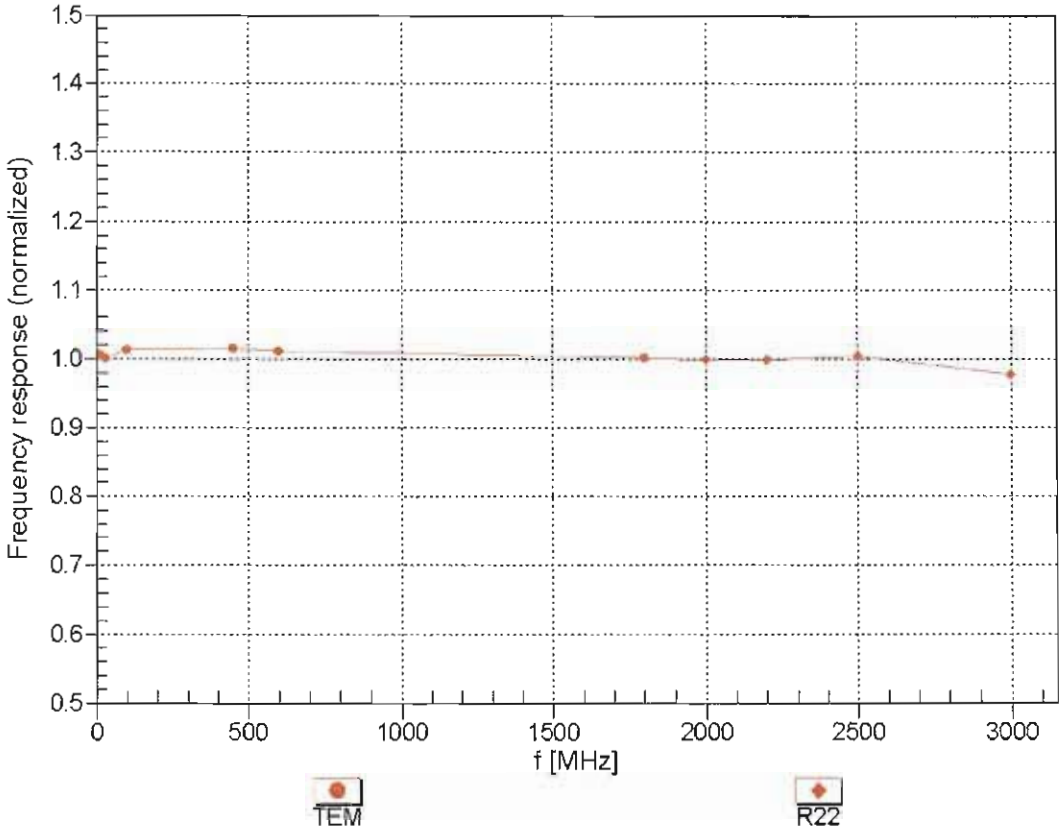

Uncertainty of Frequency Response of E-field: ± 6.3% (k=2)

Receiving Pattern (ϕ), ϑ = 0°

f=600 MHz,TEM

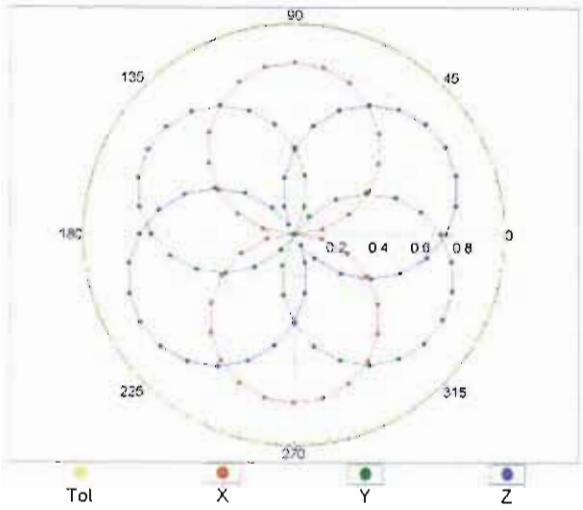

f=1800 MHz,R22

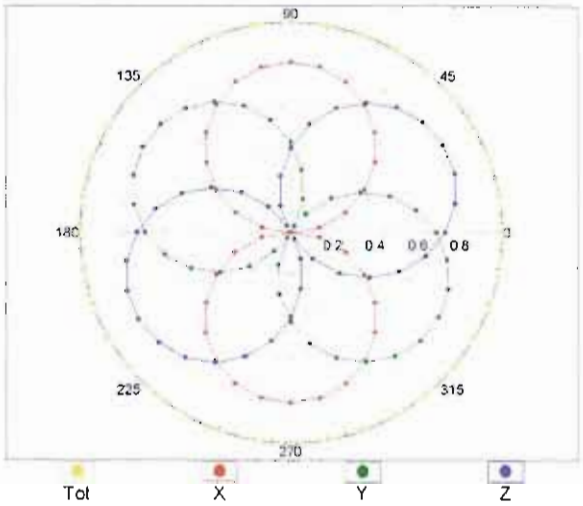

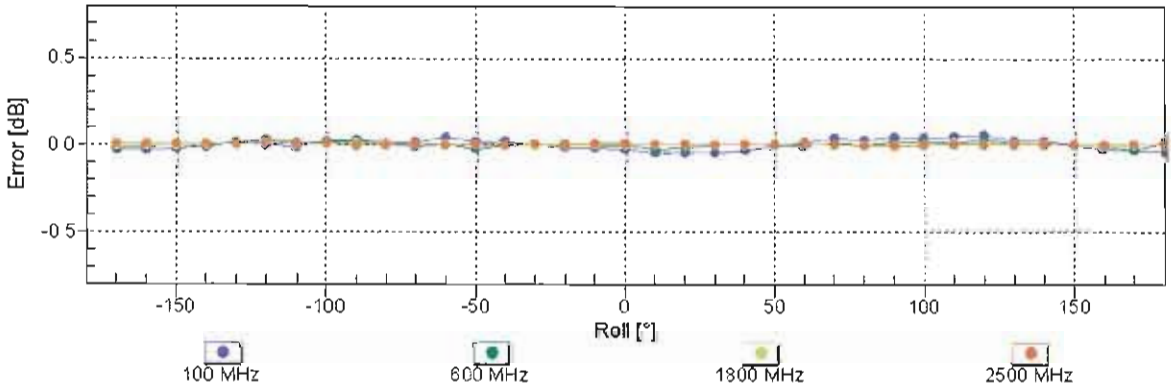

Uncertainty of Axial Isotropy Assessment: ± 0.5% (k=2)

Dynamic Range f(SAR_{head})
(TEM cell , f = 900 MHz)

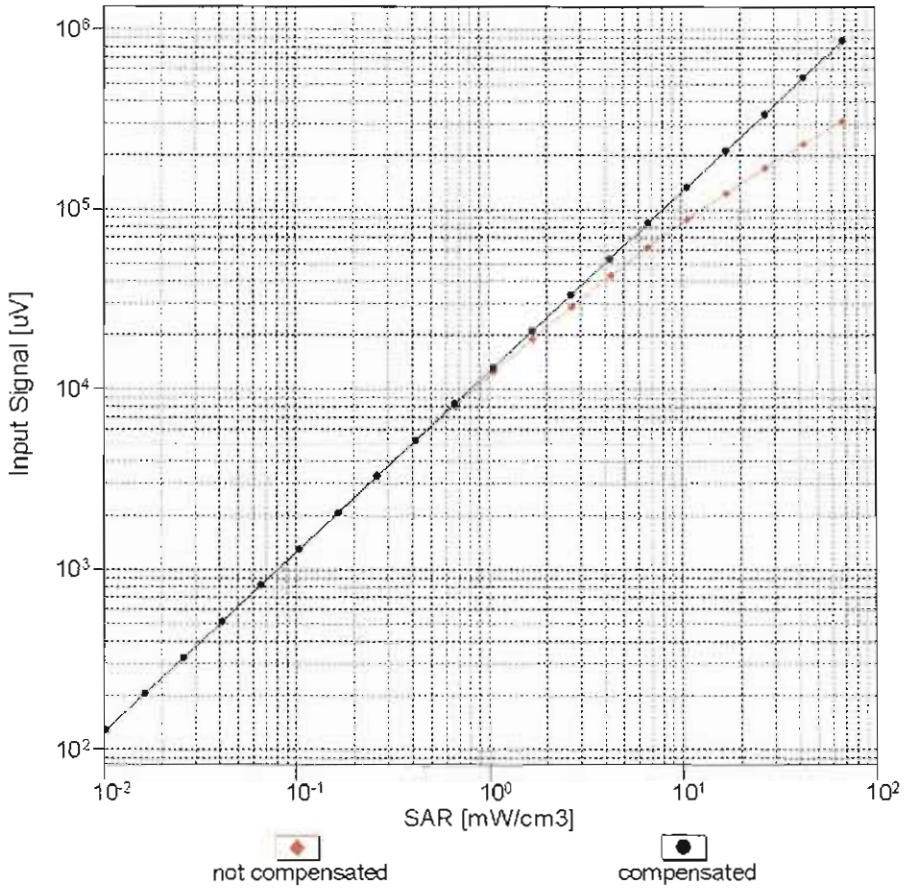

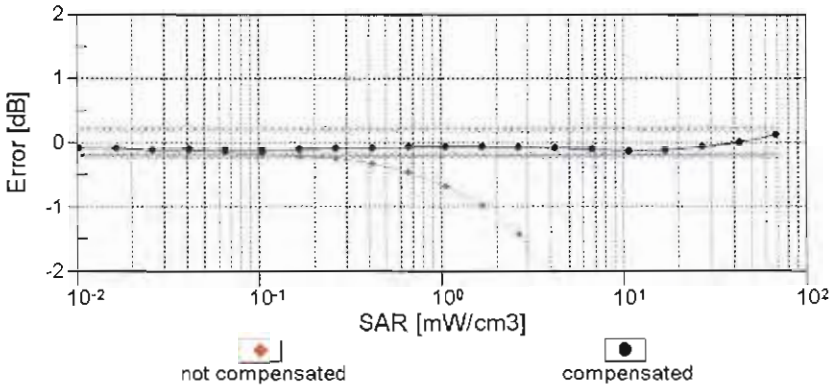

Uncertainty of Linearity Assessment: ± 0.6% (k=2)

Conversion Factor Assessment

f = 900 MHz,WGLS R9 (H_convF)

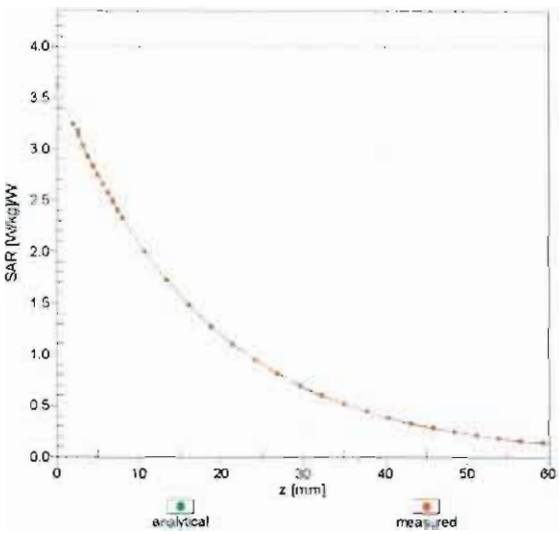

f = 1900 MHz,WGLS R22 (H_convF)

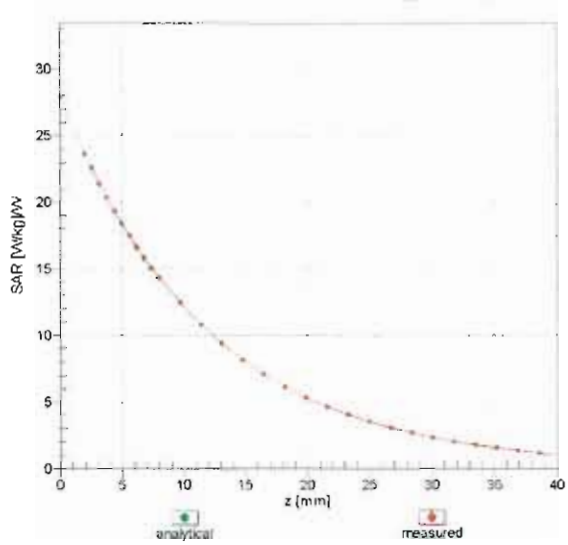

Deviation from Isotropy in Liquid

Error (ϕ, ϑ), f = 900 MHz

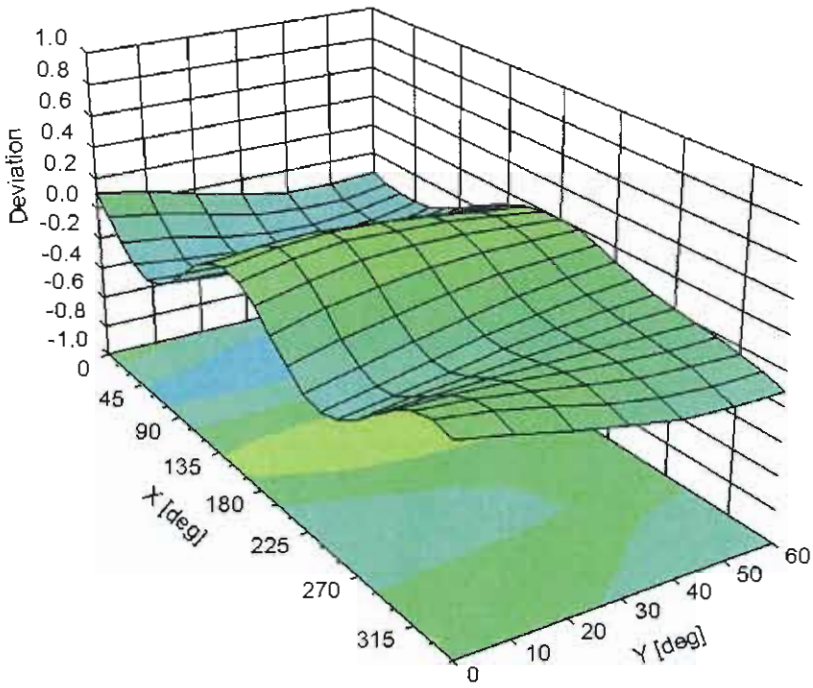

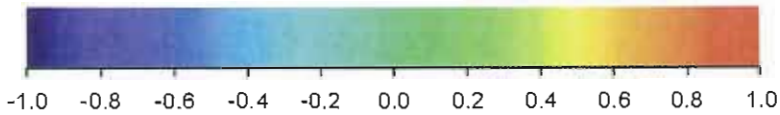

Uncertainty of Spherical Isotropy Assessment: ± 2.6% (k=2)

DASY/EASY - Parameters of Probe: ES3DV3 - SN:3071

Other Probe Parameters

Sensor Arrangement	Triangular
Connector Angle (°)	-120.5
Mechanical Surface Detection Mode	enabled
Optical Surface Detection Mode	disabled
Probe Overall Length	337 mm
Probe Body Diameter	10 mm
Tip Length	10 mm
Tip Diameter	4 mm
Probe Tip to Sensor X Calibration Point	2 mm
Probe Tip to Sensor Y Calibration Point	2 mm
Probe Tip to Sensor Z Calibration Point	2 mm
Recommended Measurement Distance from Surface	3 mm