SONY

5-009-934-**11** (1)

Wireless Microphone Package

Operating Instructions

Before operating the unit, please read this manual thoroughly and retain it for future reference.

UWP-D21/D22/D26
UTX-B40
UTX-M40
UTX-P40
URX-P40

© 2019 Sony Corporation

Table of Contents

Configuration of the Packages 3
UWP-D21 3
UWP-D22 4
UWP-D26 5
Models available separately..... 6
Features 7
UWP-D21 7
UWP-D22 7
UWP-D26 7
Name and Function of Parts.....8
Body-pack transmitter (UTX-B40)..... 8
Hand-held microphone (UTX-M40)..... 9
Plug-on transmitter (UTX-P40)..... 11
Portable diversity tuner (URX-P40) 12
Power Supply.....14
Inserting the batteries..... 14
Supplying power from a USB connector.... 16
Attaching Accessories.....17
Attaching accessories to the body-pack transmitter (UTX-B40)..... 17
Attaching accessories to the hand-held microphone (UTX-M40)..... 18
Attaching accessories to the plug-on transmitter (UTX-P40) 18
Attaching accessories to the portable diversity tuner (URX-P40) 18
Operation 19
If noise is generated..... 20
Tuner Settings 20
Menu structure and operation 20
Setting the receive channel 21
Searching for available channels within a group (Clear Channel Scan) 21
Searching for active channels within a group (Active Channel Scan) 22
Adjusting the monitor audio level 22
Configuration menu 23
Transmitter Settings 26
Menu structure and operation 26
Setting the transmit channel..... 27
Configuration menu 28
System Configuration Example 31
Error Messages 32
Troubleshooting.....33
Important Notes on Use.....35
Usage and storage 35
Cleaning 35
Specifications.....35
Transmitter (UTX-B40/M40/P40)..... 35
Tuner..... 37

Configuration of the Packages

This manual is for the UWP-D21/D22/D26 Wireless Microphone Packages. The contents of each package are described below.

Note

Some of the packages may not be available in certain countries or areas. In addition, the U90 model can only be used in the USA.
The use of U90 transmitters requires a license and is subject to restrictions on frequency selection and channel spacing. For details, consult your Sony dealer.

UWP-D21

The package consists of a body-pack transmitter (UTX-B40), a portable diversity tuner (URX-P40), and their accessories. When used in conjunction with a compact camcorder, a mobile system for ENG (Electronic News Gathering) or EFP (Electronic Field Production) applications can be constructed.

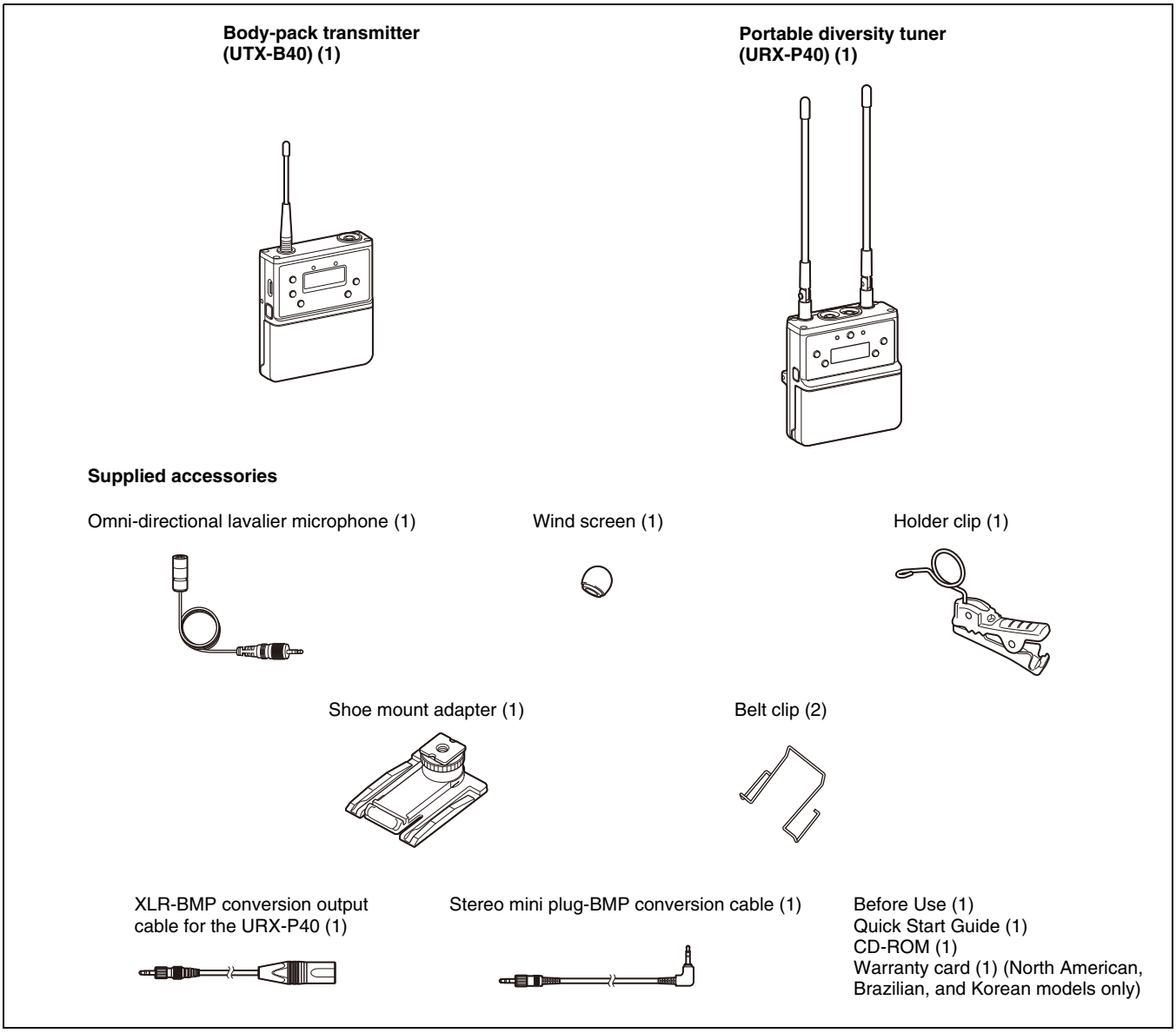

UWP-D22

The package consists of a hand-held microphone (UTX-M40), a portable diversity tuner (URX-P40), and their accessories. When used in conjunction with a compact camcorder, a mobile system for ENG (Electronic News Gathering) or EFP (Electronic Field Production) applications can be constructed.

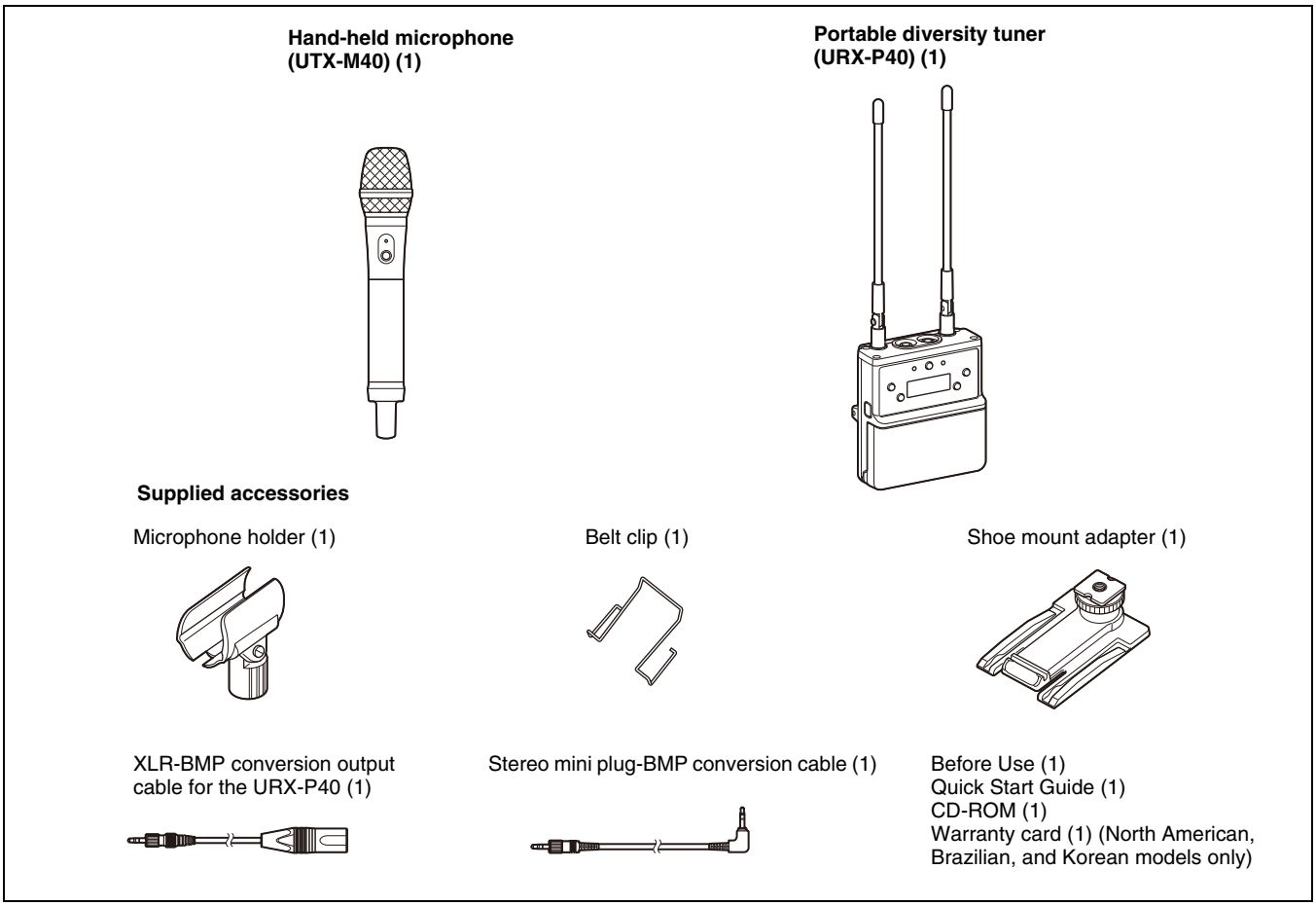

UWP-D26

The UWP-D26 consists of a plug-on transmitter (UTX-P40), a body-pack transmitter (UTX-B40), a portable diversity tuner (URX-P40), and their accessories. When used in conjunction with a compact camcorder, a mobile system for ENG (Electronic News Gathering) or EFP (Electronic Field Production) applications can be constructed.

Plug-on transmitter (UTX-P40) (1)

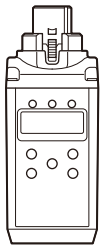

Body-pack transmitter (UTX-B40) (1)

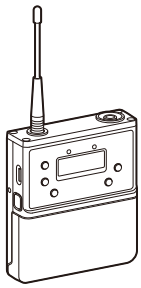

Portable diversity tuner (URX-P40) (1)

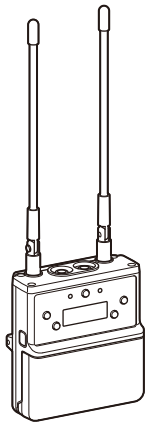

Supplied accessories

Omni-directional lavalier microphone (1)

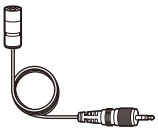

Wind screen (1)

Holder clip (1)

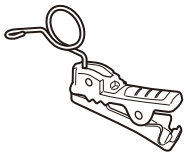

Soft case (1)

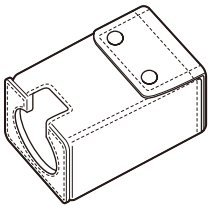

Shoe mount adapter (1)

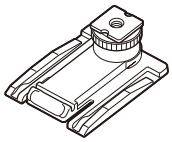

Belt clip (2)

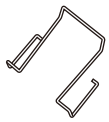

Stereo mini plug-BMP conversion cable (1)

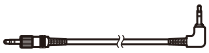

XLR-BMP conversion output cable for the URX-P40 (1)

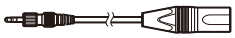

Before Use (1)
Quick Start Guide (1)
CD-ROM (1)
Warranty card (1) (North American, Brazilian, and Korean models only)

Models available separately

The transmitter and tuner in each package are available for purchase separately. The components provided with each product are given below.

UTX-B40

- Body-pack transmitter (UTX-B40) (1)
- Omni-directional lavalier microphone (1)
- Wind screen (1)
- Holder clip (1)
- Belt clip (1)
- Before Use (1)
- CD-ROM (1)
- Warranty card (1) (North American, Brazilian, and Korean models only)

UTX-M40

- Hand-held microphone (UTX-M40) (1)
- Microphone holder (1)
- Before Use (1)
- CD-ROM (1)
- Warranty card (1) (North American, Brazilian, and Korean models only)

UTX-P40

- Plug-on transmitter (UTX-P40) (1)
- Soft case (1)
- Before Use (1)
- CD-ROM (1)
- Warranty card (1) (North American, Brazilian, and Korean models only)

URX-P40

- Portable diversity tuner (URX-P40) (1)
- Shoe mount adapter (1)
- Belt clip (1)
- XLR-BMP conversion output cable for the URX-P40 (1)
- Stereo mini plug-BMP conversion cable (1)
- Before Use (1)
- CD-ROM (1)
- Warranty card (1) (North American, Brazilian, and Korean models only)

Features

The UWP-D21/D22/D26 (UWP-D series) Wireless Microphone Packages comprise a transmitter (body-pack transmitter (UTX-B40), hand-held microphone (UTX-M40), or plug-on transmitter (UTX-P40)) and a receiver (portable diversity tuner (URX-P40)). In combination with a compact camcorder or interchangeable-lens digital camera, the packages can be used for various purposes, such as ENG (Electronic News Gathering), EFP (Electronic Field Production), sports events, and weddings.

The features of each package are described below.

UWP-D21

- High quality sound with Sony Digital Audio Processing
- NFC SYNC function for quick and easy secure channel setting
- True diversity for stable signal reception
- Wide frequency coverage (excluding J, E, and KR models)
- Auto gain mode volume control
- +15 dB gain volume boost mode for off-mic audio
- Line input available
- Channel memory function for fast switching between two receiver frequencies
- Transmitter frequency sent to receiver
- Headphone output for monitoring
- Monitor mode for using a receiver as an ear monitor
- Variable muting function
- Compatibility with Sony WL-800/UWP/UWP-D series
- Output level control for receiver
- High visibility OLED display (indoor/outdoor use)
- USB for power supply
- Digital audio interface support using SMAD-P5 Multi-Interface Shoe Adapter (option)*

* For details on cameras that support this function, visit the Sony website.

UWP-D22

- High quality sound with Sony Digital Audio Processing
- NFC SYNC function for quick and easy secure channel setting
- True diversity for stable signal reception
- Wide frequency coverage (excluding J, E, and KR models)
- Interchangeable head for wide choice of microphone capsule
- Auto gain mode volume control
- +15 dB gain volume boost mode for off-mic audio
- Channel memory function for fast switching between two receiver frequencies
- Transmitter frequency sent to receiver
- Headphone output for monitoring
- Monitor mode for using a receiver as an ear monitor
- Variable muting function
- Compatibility with Sony WL-800/UWP/UWP-D series
- Output level control for receiver
- High visibility OLED display (indoor/outdoor use)
- USB connector for power supply (URX-P40 only)
- Digital audio interface support using SMAD-P5 Multi-Interface Shoe Adapter (option)*

* For details on cameras that support this function, visit the Sony website.

UWP-D26

- High quality sound with Sony Digital Audio Processing
- NFC SYNC function for quick and easy secure channel setting
- True diversity for stable signal reception
- Wide frequency coverage (excluding E and KR models)
- Auto gain mode volume control
- +15 dB gain volume boost mode for off-mic audio
- Line input available
- +48V power supply (plug-on transmitter)
- Channel memory function for fast switching between two receiver frequencies
- Transmitter frequency sent to receiver
- Headphone output for monitoring
- Monitor mode for using a receiver as an ear monitor
- Variable muting function
- Compatibility with Sony WL-800/UWP series
- Output level control for receiver
- High visibility OLED display (indoor/outdoor use)
- USB for power supply
- Digital audio interface support using SMAD-P5 Multi-Interface Shoe Adapter (option)*

* For details on cameras that support this function, visit the Sony website.

Name and Function of Parts

Body-pack transmitter (UTX-B40)

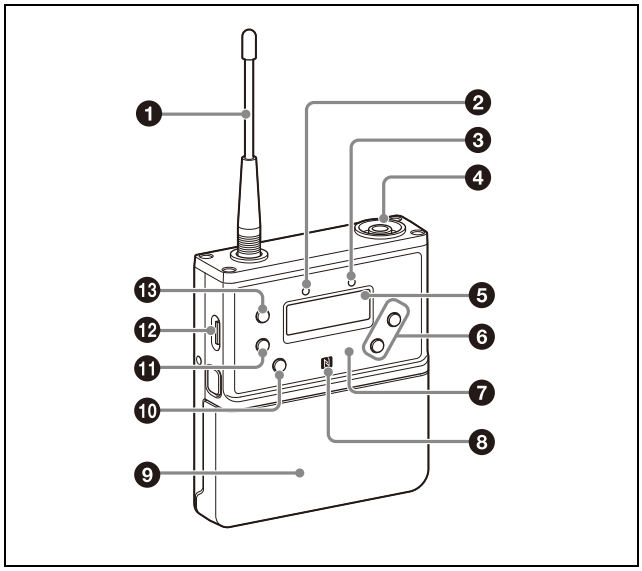

❶ Antenna

❷ POWER indicator

Displays the battery level.

Indicator display	Status
On (green)	Sufficient battery level
Flashing (green)	Battery is getting low
Off	Supply OFF

❸ AUDIO (audio input level) indicator

Turns on or off according to the audio input level as follows.
On (red): Audio input level is too high. If the sound is distorted, adjust the attenuation level to decrease the audio input level *(page 28)*.
On (green): Audio input level is appropriate.
Off: There is no audio input or the input level is too low.
Flashing (orange): Audio is muted (i.e., disabled).

❹ Audio input connector (BMP type)

Connect to the supplied lavalier microphone.

Notes

- When the audio input level is set to MIC, a voltage for the lavalier microphone power supply is applied to the audio input connector. Special electrical wiring is used inside the audio input connector for this purpose.
- If a lavalier microphone other than the one supplied is connected, the proper performance may not be obtained.

❺ Display section

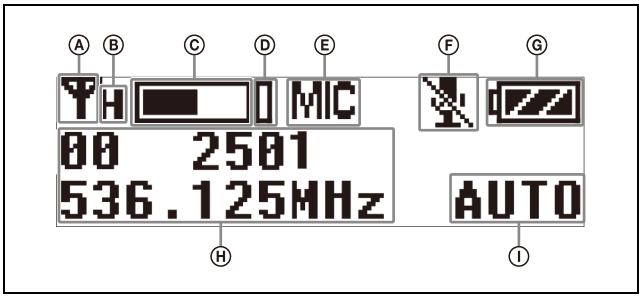

Ⓐ RF transmission indicator

Displays the current transmission status.

: Transmitting
– : Transmission stopped

Ⓑ RF transmission power indicator

Indicates the current transmission power setting. You can change the setting with the RF transmission power setting function.

For details on the RF transmission power setting function, see "Setting the transmit output level (RF POWER)" (page 29).

Ⓒ Audio input level meter

Displays the audio input level.

Ⓓ Peak indicator

Lights up when the signal is 3 dB below the level at which distortion begins as a warning of excessive input level.

Ⓔ Input level indicator

Displays the input level status.
MIC: Microphone input
LINE: Line input

Ⓕ Muting status indicator

Displays an icon when the muting function is on.

For details about the muting function, see "Setting the operation of the audio muting function (MUTE SETTING) (UTX-B40/P40 only)" (page 29).

Ⓖ Battery level indicator

Displays the battery level. "USB" is displayed when power is supplied from the USB connector.

For details, see "Battery level indicator" (page 16).

Ⓗ Menu display section

Displays various functions. Press the + or – button to switch functions.

For details, see "Configuration menu" (page 23).

Ⓘ Gain mode indicator

Displays the gain mode setting.

For details, see "Setting the audio gain (GAIN MODE)" (page 28).

❻ + or – button

Selects functions or values shown on the display.

❼ Infrared detector

Receives the frequency and compander mode set on the tuner.

❽ N-Mark

Receives the frequency and compander mode set on the tuner. It also notifies the tuner about the frequency and compander mode set on the transmitter.

❾ Battery compartment

Accepts two AA batteries (alkaline, nickel metal hydride, or lithium batteries).

For details on how to insert batteries, see "Power Supply" (page 14).

❿ MUTE button

Turns the muting function on/off. You can change the muting function on/off control method in the configuration menu.

For details about switching the muting function on/off, see "Setting the operation of the audio muting function (MUTE SETTING) (UTX-B40/P40 only)" (page 29).

⓫ SET button

Adjusts displayed function settings and enters the displayed value.
Holding down the SET button while turning on the power turns the transmitter on without transmitting a signal (transmission stopped mode).

⓬ USB connector (Type C)

Connect to a commercially available USB portable power supply.
When a USB portable power supply is connected while the power is turned on, the unit automatically operates with power supplied by the USB portable power supply.

⓭ POWER button

Turns the power on/off.

Function	Operation
Supply ON	Press button for one second or longer
Supply OFF	Press button until the indicator turns off

Hand-held microphone (UTX-M40)

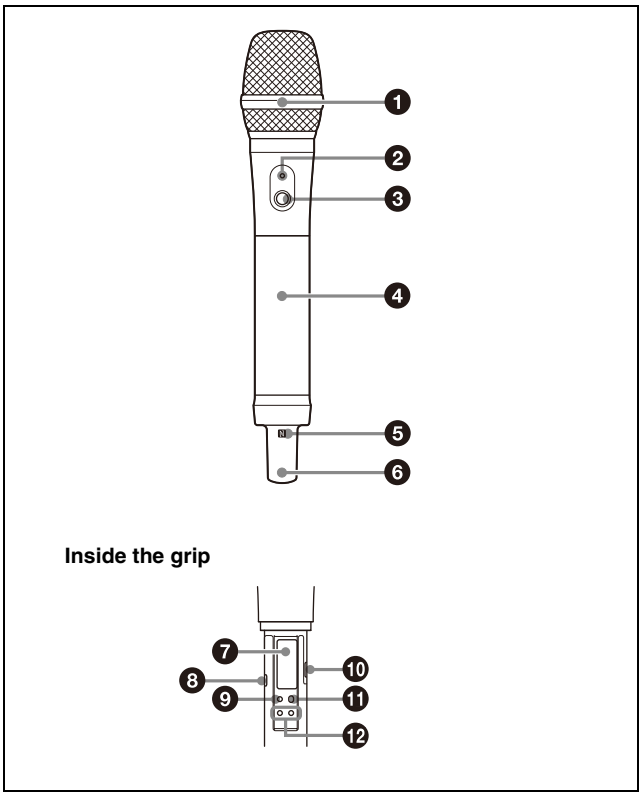

❶ Microphone unit

The standard-equipped microphone unit can be interchanged with another microphone unit having a diameter of 31.3 mm and a pitch of 1.0 mm.

For details on attaching and removing the microphone unit, see "Replacing the microphone unit" (page 18).

❷ POWER indicator

Displays the battery level and audio muting (i.e., audio enabled or disabled) status.

Indicator display	Status
On (green)	Sufficient battery level
Flashing (green)	Battery is getting low
Off	Supply OFF
Flashing (orange)	Audio is muted (i.e., disabled)

❸ POWER/MUTE button

Turns the power on/off. You also use this button to turn the muting function on/off.

Function	Operation
Supply ON	Press button for one second or longer
Supply OFF	Press button until the indicator turns off
Muting ON	Press button
Muting OFF	

You can disable the power supply operation of the POWER/MUTE button and change the muting function on/off control method from the configuration menu.

For details, see "Setting the operation of the audio muting function (POWER/MUTE) (UTX-M40 only)" (page 29).

❹ Battery compartment

Accepts two AA batteries (alkaline, nickel metal hydride, or lithium batteries).

For details on how to insert batteries, see "Power Supply" (page 14).

❺ N-Mark

Receives the frequency and compander mode set on the tuner. It also notifies the tuner about the frequency and compander mode set on the transmitter.

❻ Antenna section

❼ Display section

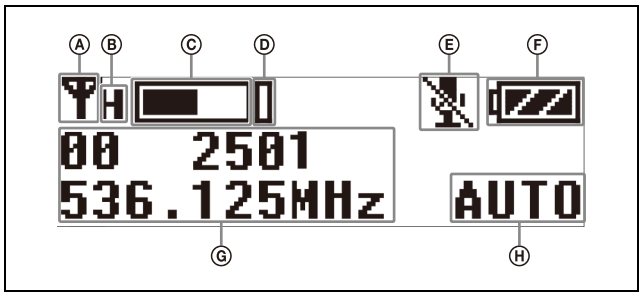

Ⓐ RF transmission indicator

Displays the current transmission status.

- : Transmitting
- – : Transmission stopped

Ⓑ RF transmission power indicator

Indicates the current transmission power setting. You can change the setting with the RF transmission power setting function.

For details on the RF transmission power setting function, see "Setting the transmit output level (RF POWER)" (page 29).

Ⓒ Audio input level meter

Displays the audio input level.

Ⓓ Peak indicator

Lights up when the signal is 3 dB below the level at which distortion begins as a warning of excessive input level.

Ⓔ Muting status indicator

Displays an icon when the muting function is on.

For details about the muting function, see "Setting the operation of the audio muting function (POWER/MUTE) (UTX-M40 only)" (page 29).

Ⓕ Battery level indicator

Displays the battery level.

For details, see "Battery level indicator" (page 16).

Ⓖ Menu display section

Displays various functions. Press the + or – button to switch functions.

For details, see "Configuration menu" (page 23).

Ⓗ Gain mode indicator

Displays the gain mode setting.

For details, see "Setting the audio gain (GAIN MODE)" (page 28).

❽ Infrared detector

Receives the frequency and compander mode set on the tuner.

❾ SET button

Adjusts displayed function settings and enters the displayed value.
Holding down the SET button while turning on the power turns the transmitter on without transmitting a signal (transmission stopped mode).

❿ USB connector (Type C)

For use by service personnel.

⓫ POWER button

Turns the power on/off.

⓬ + or – button

Selects functions or values shown on the display.

Plug-on transmitter (UTX-P40)

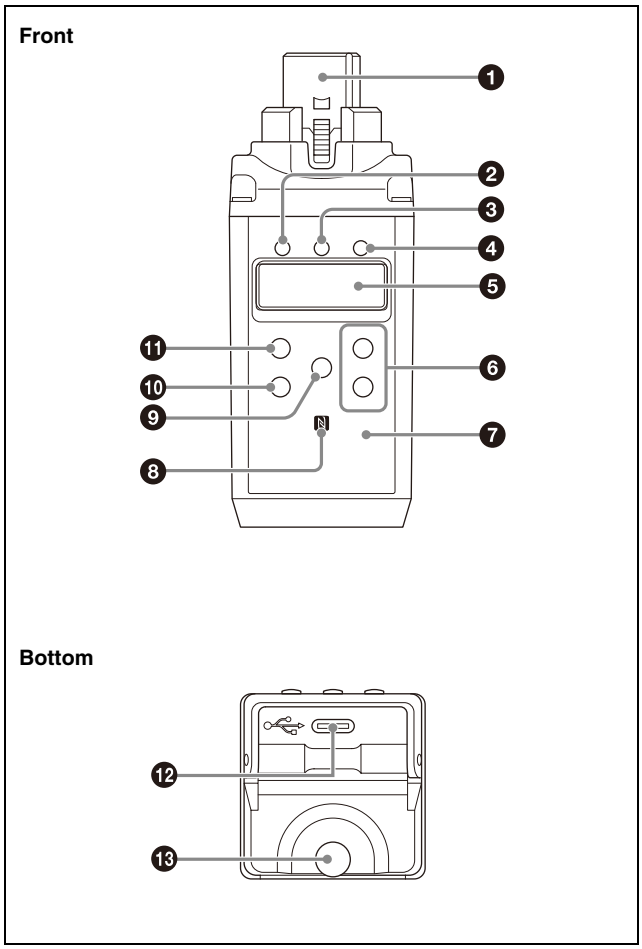

❶ Audio input connector (XLR type)

Connect to a microphone or the line output of an audio mixer or other device.

❷ +48V (+48 V supply) indicator

Lights up when the unit is set to MIC input and is supplying power to the connected microphone.

❸ POWER indicator

Displays the battery level.

Indicator display	Status
On (green)	Sufficient battery level
Flashing (green)	Battery is getting low
Off	Supply OFF

❹ AUDIO (audio input level) indicator

Turns on or off according to the audio input level as follows.
On (red): Audio input level is too high. If the sound is distorted, adjust the attenuation level to decrease the audio input level *(page 28)*.
On (green): Audio input level is appropriate.
Off: There is no audio input or the input level is too low.
Flashing (orange): Audio is muted (i.e., disabled).

❺ Display section

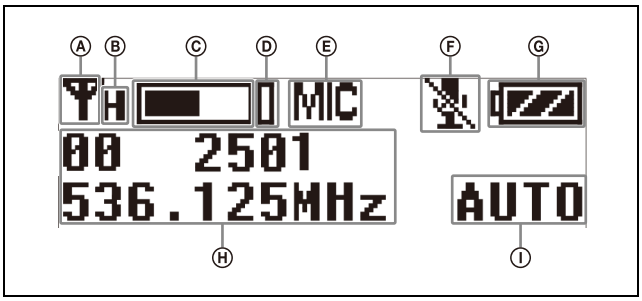

Ⓐ RF transmission indicator

Displays the current transmission status.

: Transmitting
– : Transmission stopped

Ⓑ RF transmission power indicator

Indicates the current transmission power setting. You can change the setting with the RF transmission power setting function.

For details on the RF transmission power setting function, see "Setting the transmit output level (RF POWER)" (page 29).

Ⓒ Audio input level meter

Displays the audio input level.

Ⓓ Peak indicator

Lights up when the signal is 3 dB below the level at which distortion begins as a warning of excessive input level.

Ⓔ Input level indicator

Displays the input level status.
MIC: Microphone input
LINE: Line input

Ⓕ Muting status indicator

Displays an icon when the muting function is on.

For details about the muting function, see "Setting the operation of the audio muting function (MUTE SETTING) (UTX-B40/P40 only)" (page 29).

Ⓖ Battery level indicator

Displays the battery level. "USB" is displayed when power is supplied from the USB connector.

For details, see "Battery level indicator" (page 16).

Ⓗ Menu display section

Displays various functions. Press the + or – button to switch functions.

For details, see "Configuration menu" (page 23).

Ⓘ Gain mode indicator

Displays the gain mode setting.

For details, see "Setting the audio gain (GAIN MODE)" (page 28).

❻ + or – button

Selects functions or values shown on the display.

❼ Infrared detector

Receives the frequency and compander mode set on the tuner.

❽ N-Mark

Receives the frequency and compander mode set on the tuner. It also notifies the tuner about the frequency and compander mode set on the transmitter.

❾ MUTE button

Turns the muting function on/off. You can change the muting function on/off control method in the configuration menu.

For details about switching the muting function on/off, see "Setting the operation of the audio muting function (MUTE SETTING) (UTX-B40/P40 only)" (page 29).

❿ SET button

Adjusts displayed function settings and enters the displayed value.
Holding down the SET button while turning on the power turns the transmitter on without transmitting a signal (transmission stopped mode).

⓫ POWER button

Turns the power on/off.

Function	Operation
Supply ON	Press button for one second or longer
Supply OFF	Press button until the indicator turns off

⓬ USB connector (Type C)

Connect to a commercially available USB portable power supply.
When a USB portable power supply is connected while the power is turned on, the unit automatically operates with power supplied by the USB portable power supply.

⓭ Battery compartment

Accepts two AA batteries (alkaline, nickel metal hydride, or lithium batteries).

For details on how to insert batteries, see "Power Supply" (page 14).

Portable diversity tuner (URX-P40)

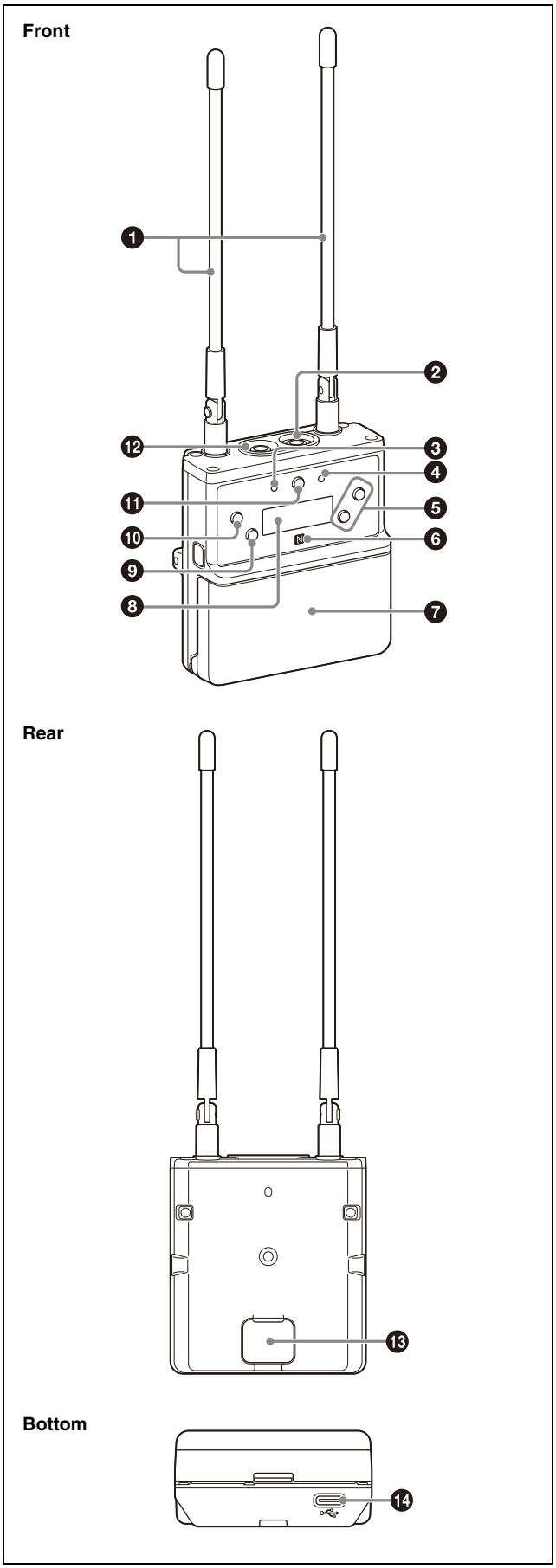

❶ Antenna

❷ PHONES (monitor) connector (3.5 mm diameter, stereo mini jack)

Connect to headphones to monitor the audio output.

Note

Do not connect headphones with a monaural mini jack. This may short-circuit the headphone outputs, resulting in distorted sound output.

❸ POWER indicator

Displays the battery level.

Indicator display	Status
On (green)	Sufficient battery level
Flashing (green)	Battery is getting low
Off	Supply OFF

❹ RF (radio frequency input) indicator

Displays the RF input level using the following colors.
On (green): Input level is 25 dBμ or more.
On (red): Input level is 15 dBμ to 25 dBμ.
Off: Input level is 15 dBμ or lower.

* 0 dBμ = 1 μV_{EMF}

❺ + or – button

Selects functions or values shown on the display.

❻ N-Mark

Sends the set frequency and compander mode to the transmitter. It also detects the tuner about the frequency and compander mode set on the transmitter.

❼ Battery compartment

Accepts two AA batteries (alkaline, nickel metal hydride, or lithium batteries).

For details on how to insert batteries, see "Power Supply" (page 14).

❽ Display section

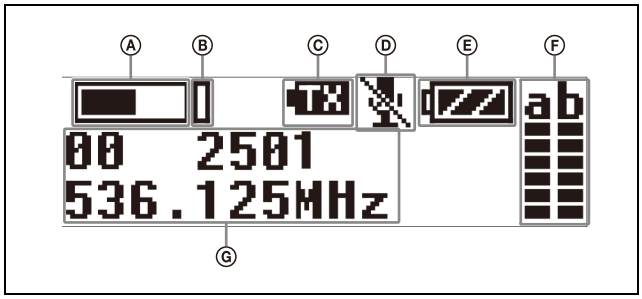

Ⓐ Audio input level meter

Displays the audio input level.

Ⓑ Peak indicator

Lights up when the signal is 3 dB below the level at which distortion begins as a warning of excessive input level.

Ⓒ Transmitter power warning indicator

Displays an icon when the remaining battery capacity of the transmitter being received is almost discharged.

Note

This function is enabled only when the transmitter is a UTX-B40/M40/P40.

Ⓓ Transmitter muting status indicator

Displays an icon when the muting function of the transmitter being received is on.

Note

This function is enabled only when the transmitter is a UTX-B40/M40/P40.

Ⓔ Battery level indicator

Displays the battery level. "USB" is displayed when power is supplied from the USB connector. "MI" is displayed when power is supplied from an SMAD-P5 (not supplied).

For details, see "Battery level indicator" (page 16).

Ⓕ RF level (reception level) indicator

Indicates the current reception level.

Ⓖ Menu display section

Displays various functions. Press the + or – button to switch functions.

For details, see "Configuration menu" (page 23).

❾ NFC SYNC (NFC communication) button

Press to start a channel scan and for NFC communication with the transmitter.

For details, see "Operation" (page 19).

❿ SET button

Adjusts displayed function settings and enters the displayed value.
Holding down the SET button while turning on the power turns the transmitter on without transmitting a signal (transmission stopped mode).

⓫ POWER button

Turns the power on/off.

Function	Operation
Supply ON	Press button for one second or longer
Supply OFF	Press button until the indicator turns off

⓬ OUTPUT (audio output) connector (3.5 mm diameter, stereo mini jack)

Connect one end of the supplied XLR-BMP conversion output cable for the URX-P40 or the stereo mini plug-BMP conversion cable here and the other end to the microphone input on a camcorder, mixer, or amplifier. If the microphone input connector on the connected device is a stereo mini jack, connect the straight (BMP) plug to the tuner and the L-shaped (stereo mini) plug to the microphone input connector on the device.

Note

To prevent damaging the tuner, do not apply a voltage to this connector from a microphone external power supply or other source.

⓭ Auxiliary connector

Used to connect external accessories.

⓮ USB connector (Type C)

Connect to a commercially available USB portable power supply.
When the power is turned on, the unit operates with power supplied by the USB portable power supply.

Power Supply

This section describes the power supply of each device.

Body-pack transmitter (UTX-B40) and plug-on transmitter (UTX-P40)

The unit operates using power supplied from two AA batteries (alkaline, nickel metal hydride, or lithium batteries) or from a supply connected to the USB connector. If power is supplied simultaneously from batteries and from a supply connected to the USB connector, power from the USB connector has precedence. For details about inserting batteries in each device and displaying the battery level, or supplying power from a supply connected to the USB connector, see the following sections.

Hand-held microphone (UTX-M40)

The unit operates from two AA batteries (alkaline, nickel metal hydride, or lithium batteries). For details about inserting batteries and displaying the battery level, see the following sections.

Portable diversity tuner (URX-P40)

The unit operates from two AA batteries (alkaline, nickel metal hydride, or lithium batteries), power supplied from a supply connected to the USB connector, or power supplied from the auxiliary connector. The power supply that has precedence when both AA battery power and an external power supply via the USB connector or auxiliary connector are available can be specified using the POWER SOURCE (external power selection) function. Under the factory default setting, the power supplied from inserted AA batteries has precedence. For details about inserting batteries and displaying the battery level, or supplying power from supply connected to the USB connector, see the following sections.

For details on the POWER SOURCE function setting, see "Selecting the preferred power supply (POWER SOURCE)" (page 25).

Note

The use of manganese batteries will result in poor performance. Do not use manganese batteries.

Inserting the batteries

Notes

- Always use sets of the same type of battery. Do not use batteries of different types or batteries with different charge level together.
- Replacing the batteries during operation may generate a large noise. Be sure to turn off the unit before replacing the batteries.

Body-pack transmitter (UTX-B40) / portable diversity tuner (URX-P40)

The following describes the procedure using illustrations for the body-pack transmitter (UTX-B40). Batteries can be inserted in the portable diversity tuner (URX-P40) in the same manner.

1 Press and hold the POWER button to turn the power off.

2 Press and hold the buttons on the left and right sides, and pull off the battery compartment.

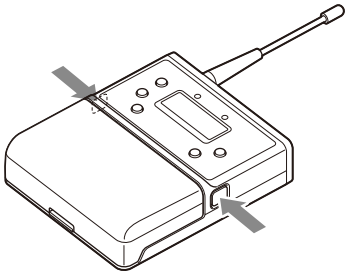

3 Open the battery compartment, insert two new AA batteries into the battery compartment with ⊕ and ⊖ polarities in the correct orientation, and reattach the compartment.

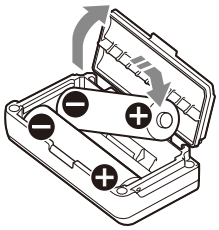

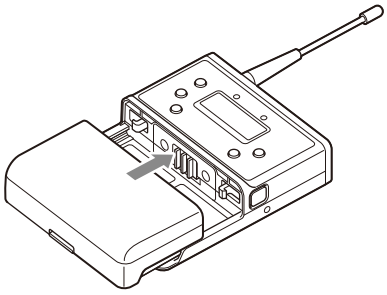

Make sure that the battery compartment is locked securely.

Hand-held microphone (UTX-M40)

1 Press and hold the POWER/MUTE button or POWER button to turn the power off.

Note

The button used to turn off power varies depending on the POWER/MUTE setting.

For details, see "Setting the operation of the audio muting function (POWER/MUTE) (UTX-M40 only)" (page 29).

2 Turn the grip in the direction of the arrow, and pull the grip down until the battery compartment is visible.

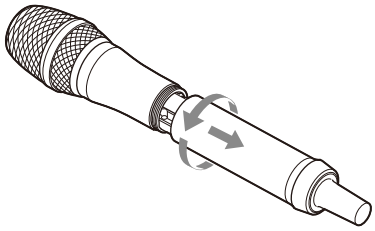

3 Insert two new AA batteries into the battery compartment with ⊕ and ⊖ polarities in the correct orientation.

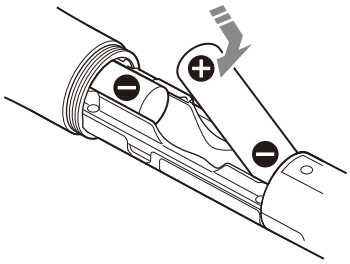

4 Close the grip, turning it in the reverse direction of step **2**.

Plug-on transmitter (UTX-P40)

1 Press and hold the POWER button to turn the power off.

2 Turn the battery compartment knob counterclockwise to open the cover.

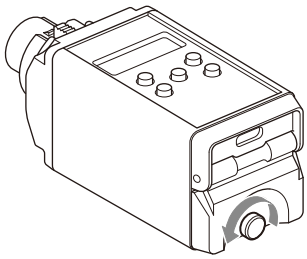

3 Insert two new AA batteries into the battery compartment with ⊕ and ⊖ polarities in the correct orientation.

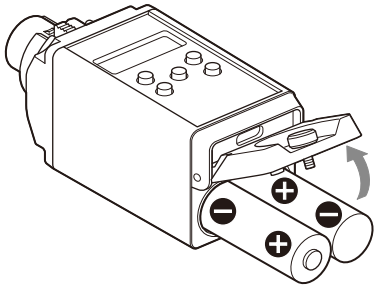

4 Close the battery compartment cover and turn the knob clockwise to lock the cover.

Check that the cover is fully closed before tightening the knob.

Battery level indicator

Press and hold the POWER button for 1 second or longer to display the battery level on the display.
Immediately replace both batteries with new batteries if the indicator starts flashing (indication 5 below). If using new alkaline batteries, use after checking the recommended time limits.

	Battery level indicator	Battery status
1	Lights	Good
2	Lights	Less than 70% charge remaining
3	Lights	Less than 40% charge remaining
4	Lights	Less than 20% charge remaining
5	Flashes	Almost empty

Notes

- When BATTERY TYPE is set to TYPE1, the battery level is indicated based on the use of new LR6 (size AA) Sony alkaline batteries. The battery level may not be displayed correctly when different kinds of batteries, different brand of batteries, or old batteries are used. If using batteries other than size AA alkaline batteries, select the battery type using the BATTERY TYPE function.
- If you plan to use the transmitter continuously for a long period of time, it is recommended that you replace the batteries with brand new ones.
- Battery power is gradually consumed, even when the unit is turned off. Remove the batteries from the unit before prolonged periods of disuse.

For details on the BATTERY TYPE function setting, see "Setting the battery type (BATTERY TYPE)" (page 25).

Battery precautions

Batteries may leak or explode if mistreated. Be sure to follow these instructions.

- Insert batteries in the correct ⊕ and ⊖ polarity orientation.
- Always replace the two batteries together with new ones.
- Do not use different types of batteries or old and new ones together.
- Batteries cannot be charged with this unit.
- When not using the device for a long period of time, remove the batteries. If the batteries leak for any reason, consult your Sony service representative.

Supplying power from a USB connector

The transmitter (UTX-B40/P40) and tuner (URX-P40) can operate from a commercially available USB-output type AC adapter or portable power supply connected to the USB connector.
When supplying power using a USB-output type AC adapter or portable power supply, use a unit that satisfies the following conditions.

- Output connector: USB type C
- Rated voltage: 5 V
- Output current: 200 mA or higher

Displays "USB" when power is supplied from the USB connector.

Notes

- The UTX-M40 hand-held microphone cannot be supplied using a USB connector.
- Noise may occur in the audio depending on the AC adapter or portable power supply that is connected. In such cases, you can reduce the noise by distancing the unit or lavalier microphone from the AC adapter or portable power supply or otherwise altering their positions.
- If a USB Type C adapter (from a different connector type) or a cable that does not comply with the USB Type C standard is used, noise may occur or power may not be applied correctly. Always use cables that comply with the USB Type C standard.

Attaching Accessories

This section describes how to attach the supplied accessories to each device.

Attaching accessories to the body-pack transmitter (UTX-B40)

Connecting the microphone

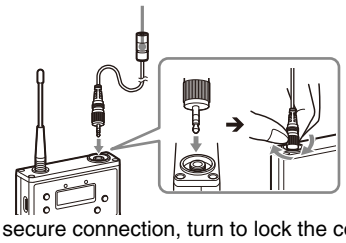

For a secure connection, turn to lock the connector.

Note

Be sure to attach or remove the microphone after turning off the transmitter.

Attaching the holder clip to the microphone

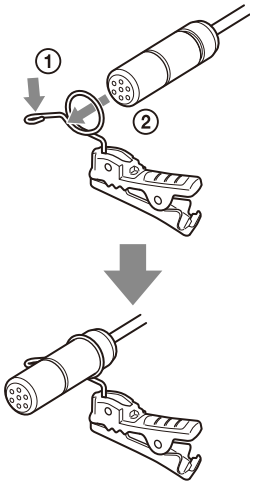

Push the end of the microphone holder to expand the ring opening (①), and insert the microphone (②). Align the groove on the base of the microphone with the ring, then release the clip to secure the microphone.

To secure the microphone cable

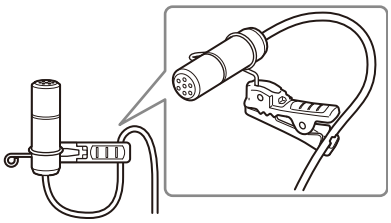

Insert the microphone cable through the clamp of the holder clip.

Attaching the wind screen to the microphone

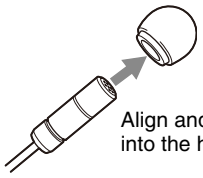

Align and insert the microphone into the hole in the wind screen.

Attaching a belt clip

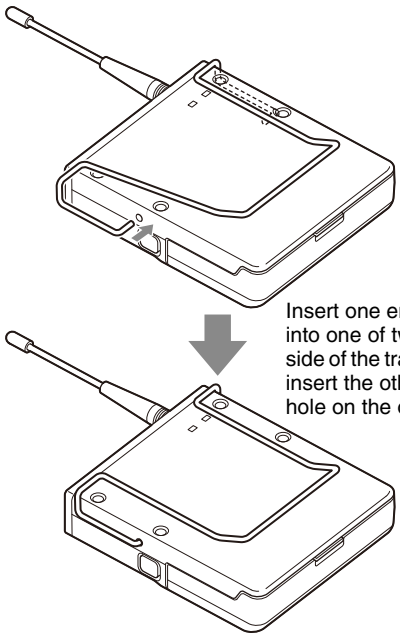

Insert one end of the belt clip into one of two holes on either side of the transmitter, and then insert the other end into the hole on the other side.

To remove a belt clip

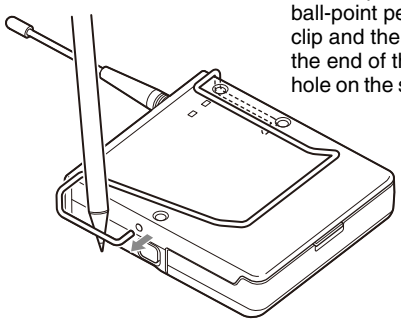

Insert a pointed object, such as a ball-point pen, between the belt clip and the transmitter, and pry the end of the belt clip from the hole on the side of the transmitter.

Attaching accessories to the hand-held microphone (UTX-M40)

Attaching the microphone holder

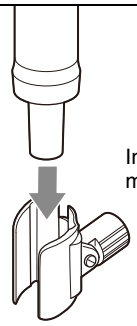

Replacing the microphone unit

Removing the microphone unit

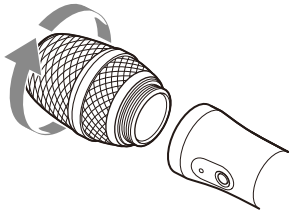

Turn the microphone unit in the direction of the arrow.

Attaching the microphone unit

Turn the microphone unit in the opposite direction from when you removed it, and make sure that the unit is securely attached to the microphone.

Attaching accessories to the plug-on transmitter (UTX-P40)

Attaching a microphone or cable

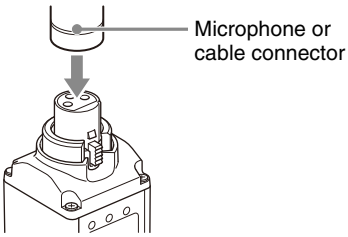

Push the microphone or cable connector (XLR-3-12C connector) into the audio input connector of the UTX-P40 until it clicks into place.

Disconnecting a microphone or cable

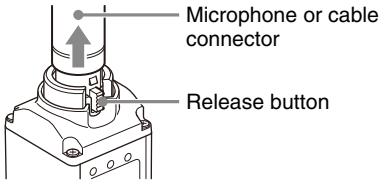

Press the release button firmly until the lock is fully released, and pull the microphone or cable out slowly.

Attaching accessories to the portable diversity tuner (URX-P40)

Connecting the conversion cable to the OUTPUT connector

Example: XLR-BMP conversion output cable for the URX-P40

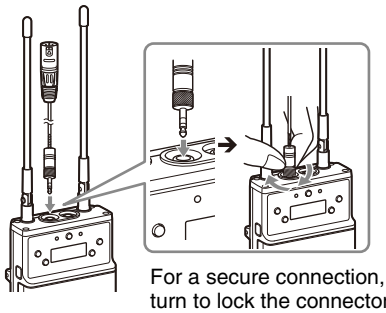

For a secure connection, turn to lock the connector.

Attaching a belt clip

See "Attaching a belt clip" (page 17).

Attaching the shoe mount adapter

Attach the belt clip before attaching the shoe mount adapter *(page 17)*.

Note

Attach belt clips upside-down if planning to attach the shoe mount adapter.

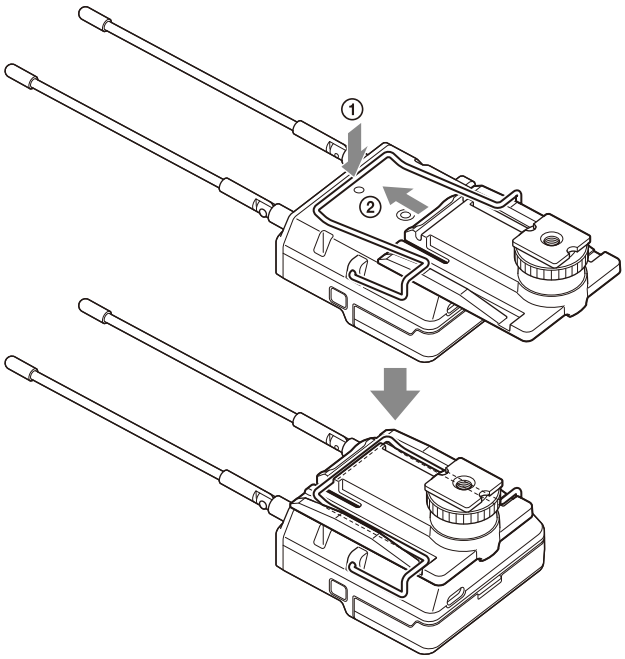

Push the bottom of the belt clip to make some space between the belt clip and the tuner (①), align the belt clip with the two vertical grooves on the shoe mount adapter, and insert the adapter in the direction of the arrow (②). Push the shoe mount adapter in fully until the belt clip fits into the horizontal groove on the adapter holds.

Note

If attaching a camcorder, bend the URX-P40 antenna down so that the antenna is not reflected on the display.

To remove the shoe mount adapter

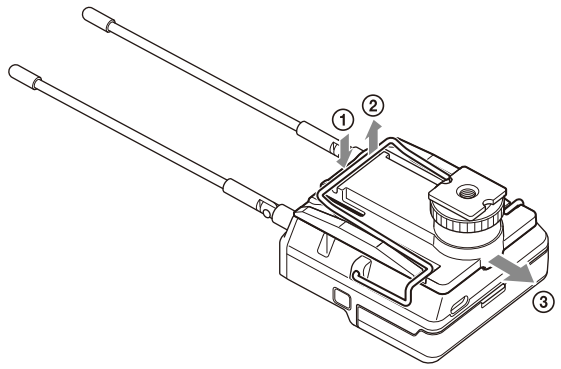

Push and hold the part labeled "PUSH" on the shoe mount adapter (①), and disengage the horizontal part of the belt clip from the horizontal groove on the shoe mount adapter (②). Then, push the shoe mount adapter in the direction of the arrow (③).

Operation

Procedure for UWP-D series devices (UTX-B40/M40/P40 and URX-P40)

1 Connect the tuner as required.

For details about example connections, see "System Configuration Example" (page 31).

2 Press and hold the POWER button for at least one second on the tuner to turn the power on.

Note

Some noise may occur when power is turned on. Accordingly, turn down the audio input level of devices connected to the tuner when turning the power on.

3 Press and hold the NFC SYNC button on the tuner for at least four seconds.

Clear Channel Scan starts searching for an available channel within the configured channel group.
When Clear Channel Scan finishes, the channel with the least noise and interference will be set.
When the channel is set, NFC communication starts automatically.

For details about how to set the group, see "Setting the receive channel" (page 21).

4 Place the N-Marks of both the tuner and transmitter in close proximity (approximately 5 mm).

At this time, make sure that the transmitter is turned on or that the battery level is sufficient and the transmitter is turned off.

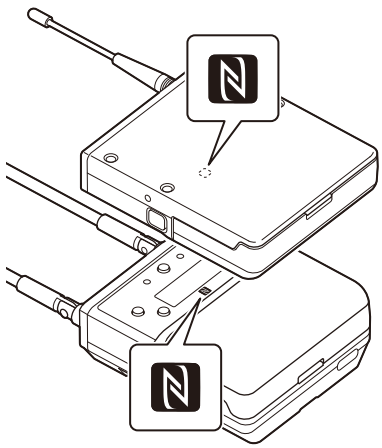

Example using a body-pack transmitter (UTX-B40). Similarly, place the N-Marks in close proximity when using other types of transmitters.

Information about the channel set on the tuner is sent to the transmitter, and then the transmit channel is set. "COMPLETE" is shown on the display of the transmitter and tuner, and the transmitter vibrates when setup is finished.
If the transmitter is turned off when NFC communication is initiated, the transmitter automatically turns on and starts transmitting.

Notes

- NFC communication lasts approximately 20 seconds. Perform step **4** within 20 seconds of performing step **3**. If 20 seconds have elapsed, you can reestablish NFC communication using the SYNC RX->TX menu on the tuner.
- Communications using NFC may be adversely affected, depending on the surrounding environment. If this occurs, use the SYNC RX->TX menu on the tuner to reestablish the link.
- If "COMPLETE" is shown on the display of the tuner but the transmitter does not vibrate, the setup may not be finished. If this occurs, use the SYNC RX->TX menu on the tuner to reestablish the link.

If noise is generated

Depending on the environment where the devices are installed, external noise or radio waves may disrupt transmission on certain channels. When selecting a channel under these circumstances, turn off the transmitter. Then, on the tuner, select a channel for which the RF indicator does not light up (i.e., a channel free from noise or radio wave interference). Set the same channel on the transmitter.

Note

To prevent interference or noise, take the following precautions.

- Do not use two or more transmitters on the same channels.
- When operating two or more UWP-D series packages simultaneously, set each package to a different channel within the same channel group.
- Keep the antennas on the tuner and transmitter separated by at least 3 meters (about 10 feet).
- When operating two or more UWP-D series packages simultaneously with different channel groups, make sure that they are at least 100 meters (330 feet) apart if they are used within clear sight of each other (actual distance may vary depending on the circumstances).

Tuner Settings

Menu structure and operation

Procedure for portable diversity tuner (URX-P40)

There are two menu display modes that can be selected according to the application.

Simple mode

This mode displays only the required settings for the tuner and audio output.
You can enable simple mode by setting MENU MODE (menu display mode) to SIMPLE.

Configuration menus

- GP/CH (group/channel) select
- PHONES (monitor audio) setting
- BAND (frequency band) select (Not available on Japanese and Korean models)
- CLR CH SCAN (clear channel scan) function
- OUTPUT LEVEL (audio output level) setting
- SYNC RX->TX (NFC communication) function
- SYNC TX->RX (NFC communication) function
- POWER LOCK (POWER button lock) function
- RUNNING TIME (accumulated running time) display
- MENU MODE (menu display mode) setting

Extended mode

This mode displays all configuration menus.
You can enable extended mode by setting MENU MODE (menu display mode) to ADVANCED.

Note

The existing settings configured in extended mode are active even when using simple mode.

Configuration menus

- GP/CH (group/channel) select
- PHONES (monitor audio) setting
- BAND (frequency band) select (Not available on Japanese and Korean models)
- CLR CH SCAN (clear channel scan) function
- OUTPUT LEVEL (audio output level) setting
- SYNC RX->TX (NFC communication) function
- SYNC TX->RX (NFC communication) function
- POWER LOCK (POWER button lock) function
- RUNNING TIME (accumulated running time) display
- MENU MODE (menu display mode) setting
- MONITOR MODE (monitor audio level screen lock) function
- CH MEMORY (store previous channel) function
- POWER SOURCE (external power selection) setting
- ACT CH SCAN (active channel scan) function
- COMPANDER (compander mode) setting
- BATTERY TYPE (battery type) setting
- DISPLAY MODE (display setting) function
- BRIGHTNESS (display brightness) setting
- FCT RESET (factory default setting) function

- VERSION (software version) display

Basic menu operation

The basic menu operation is the same in simple mode and extended mode.

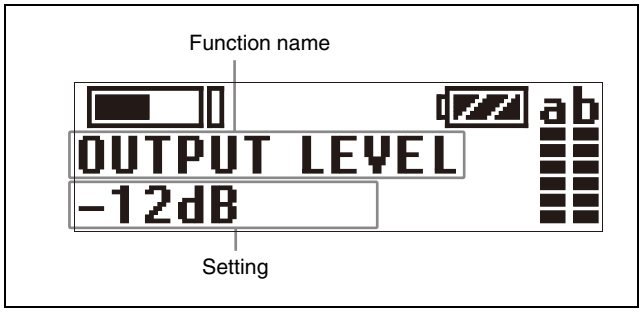

1 Press the + or – button to display the function to be set.

2 Press and hold the SET button until the setting starts flashing.

3 Press the + or – button to change the setting.

4 Press the SET button to enter the setting.

Note

If no operation is performed for 30 seconds, the display will turn off or will dim. Pressing any button will turn the display on again.

For details about display settings, see "Changing the display settings (DISPLAY MODE)" (page 25).

Setting the receive channel

Procedure for portable diversity tuner (URX-P40)

For details about the channel groups and channels that can be selected, refer to the "Frequency List" on the CD-ROM.

1 Use the + or – button to display the GP/CH menu.

2 Press and hold the SET button for one second or longer.

The channel group display starts flashing.

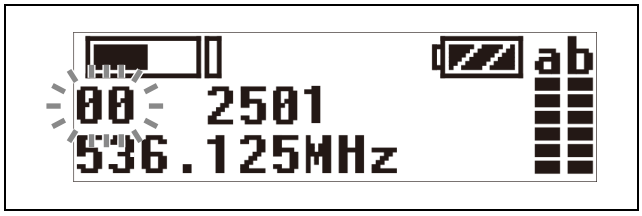

3 Use the + or – button to select the desired group name, then press the SET button.

The channel group is set, and the channel number display starts flashing.

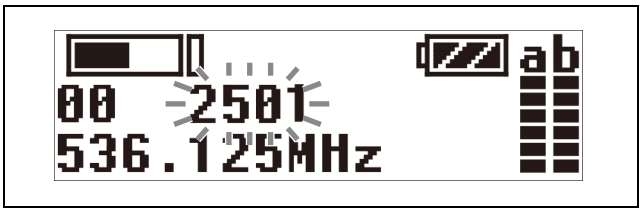

4 Use the + or – button to select the desired channel number, then press the SET button.

The displays stops flashing and the desired channel is set.

Notes

- If there is no user input within ten seconds after the channel group display or channel number display starts flashing, the displayed setting that is flashing is saved. The same applies when setting other parameters.
- The frequency indicator changes in response to the channel number.
- The tuner continues to receive, even when setting the receive channel.
- Do not remove the batteries while setting the receive channel. If they are removed, re-insert them and repeat the procedure from the beginning.
- Make sure that the same channel is set on the transmitter and tuner within the same system.

Searching for available channels within a group (Clear Channel Scan)

Procedure for portable diversity tuner (URX-P40)

You can search for available channels within the specified channel group.
Before performing this procedure, select the channel group.

For details, see "Setting the receive channel" (page 21).

1 Use the + or – button to display the CLR CH SCAN menu.

2 Press and hold the SET button for one second or longer.

Press and hold until the channel group and "+" display starts flashing.

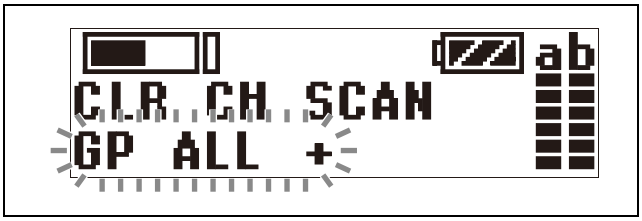

3 Press the + button.

The tuner starts to scan through the selected channel group. When available channels are found, the first channel number among the available channels starts flashing on the display.

To display the next available channel number
Press the + button.

To cancel searching
Press the – button. The display returns to the CLR CH SCAN menu.

4 Press the SET button when the desired channel number starts flashing.

The search for available channels finishes and the displayed channel is set.
Once a channel is confirmed, you can select whether to send the setting via NFC communication.

5 Select YES, and place the N-Marks of the transmitter and tuner in close proximity.

Information about the channel set on the tuner is sent to the transmitter, and then the transmit channel is set. If you do not want to set the transmitter channel, select NO or perform no action for ten seconds or longer to not send the setting to the transmitter.

To scan channels automatically

With the tuner power on, press and hold the NFC SYNC button for at least four seconds to automatically start a clear channel scan.

Searching for active channels within a group (Active Channel Scan)

Procedure for portable diversity tuner (URX-P40)
You can search for channels in use within the specified channel group. This is useful when using more than one tuner in combination with a single transmitter.
Before performing this procedure, select the channel group.

For details, see "Setting the receive channel" (page 21).

1 Use the + or – button to display the ACT CH SCAN menu.

2 Press and hold the SET button for one second or longer.

Press and hold until the channel group and "+" display starts flashing.

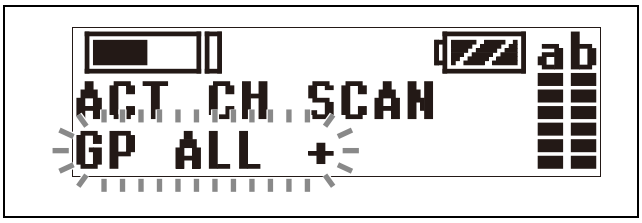

3 Press the + button.

The tuner starts to scan for active channels in the selected channel group. When active channels are found, the first channel number among the active channels starts flashing on the display.

To display the next active channel number
Press the + button.

To cancel searching
Press the – button. The display returns to the ACT CH SCAN menu.

4 Press the SET button when the desired channel number starts flashing.

The search for active channels finishes and the displayed channel is set.

Adjusting the monitor audio level

Procedure for portable diversity tuner (URX-P40)

You can set the monitor audio level within the range 1 to 16.

1 Use the + or – button to display the PHONES menu.

The current monitor audio level is displayed.

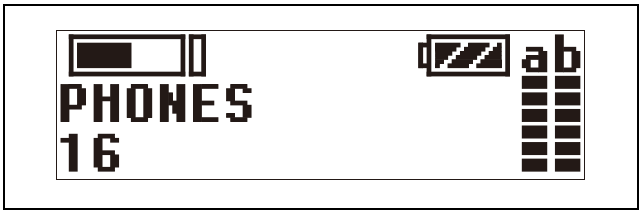

2 Press and hold the SET button for one second or longer.

Press and hold until the monitor audio level flashes.

3 Use the + or – button to set the desired monitor audio level, then press the SET button.

The setting value is stored. The setting is retained even after the power is turned off.

Configuration menu

Procedure for portable diversity tuner (URX-P40)
This section describes each function and configurable items.
Underlined entries indicate factory default settings.

Selecting group/channel (GP/CH)

The factory default setting varies depending on the model.

For details, see "Setting the receive channel" (page 21).

Adjusting the monitor audio level (PHONES)

Adjusts the monitor audio level for the headphones.
The factory default setting is 12.

For details, see "Adjusting the monitor audio level" (page 22).

Selecting the frequency band (BAND)

Selects the receive frequency band.

Note

This menu is not available on Japanese and Korean models. On these models, the frequency band cannot be selected.

For details about the groups and channels in each frequency band, refer to the "Frequency List" on the CD-ROM.

Searching for and selecting available channels (CLR CH SCAN)

Searches for available channels.

For details, see "Searching for available channels within a group (Clear Channel Scan)" (page 21).

Setting the audio output level (OUTPUT LEVEL)

Sets the audio output level. You can set the level in 3 dB increments in the range –12 dB to +12 dB. The factory default setting is 0 dB.

Note

The monitor output level does not change when you change the output level in the OUTPUT LEVEL menu. The monitor output level is adjusted separately.

For details about adjusting the monitor audio level, see "Adjusting the monitor audio level" (page 22).

Configuring transmitter settings via NFC communication (SYNC RX->TX)

Transfers the frequency and compander mode set on the tuner to a transmitter using NFC communication.

1 Use the + or – button to display the SYNC RX->TX menu.

2 Press and hold the SET button for one second or longer.

A confirmation screen appears.

3 Use the + or – button to display "YES," and press the SET button.

4 Place the N-Marks of both the tuner and transmitter in close proximity (approximately 5 mm).

At this time, make sure that the transmitter is turned on or that the battery level is sufficient and the transmitter is turned off.
The frequency and compander mode for use on the transmitter are set.

Notes

- NFC communication lasts approximately 20 seconds. Perform step **4** within 20 seconds of performing step **3**. After 20 seconds have elapsed, NFC communication automatically finishes and the GP/CH menu appears.
- During NFC communication, the signal from a wireless microphone cannot be received.

Reflecting transmitter settings on the tuner via NFC communication (SYNC TX->RX)

Accesses the frequency and compander mode set on the transmitter and reflects those settings on the tuner using NFC communication.

1 Use the + or – button to display the SYNC TX->RX menu.

2 Press and hold the SET button for one second or longer.

A confirmation screen appears.

3 Use the + or – button to display "YES," and press the SET button.

4 Place the N-Marks of both the tuner and transmitter in close proximity (approximately 5 mm).

At this time, make sure that the transmitter is turned on or that the battery level is sufficient and the transmitter is turned off.
The frequency and compander mode for use on the tuner are set.

Notes

- NFC communication lasts approximately 20 seconds. Perform step **4** within 20 seconds of performing step **3**. After 20 seconds have elapsed, NFC communication automatically finishes and the GP/CH menu appears.
- During NFC communication, the signal from a wireless microphone cannot be received.

Locking the POWER button (POWER LOCK)

You can lock the POWER button to prevent the power being turned off inadvertently during reception.
UNLOCK: Press and hold the POWER button to turn the power on/off.
LOCK: The power does not turn off, even after pressing the POWER button.

To release the lock state

To release the lock state, either set the POWER LOCK menu to UNLOCK or use the following procedure.

1 When the button is in the LOCK state, press and hold the POWER button.

A prompt appears asking you whether to release the lock state.

2 Use the + or – button to select YES, then press the SET button.

The lock state is released.

Note

If the batteries are removed and reinserted while the POWER button is set to LOCK, the power will turn on automatically but the lock state of the POWER button does not change.

Displaying the accumulated running time (RUNNING TIME)

Displays the accumulated running time of the tuner as a guide to total usage time.
The factory default setting is 00:00. Up to 99:99 can be displayed.

To reset the time display

1 Press and hold the SET button until the time display starts flashing.

2 Press the – button to display "00:00 CLR" and press the SET button.

Pressing the + button when "00:00 CLR" is displayed causes the time display to start flashing. You can press the SET button in this state to cancel the reset of the accumulated running time.

Setting the menu display mode (MENU MODE)

Sets the menu display mode.
SIMPLE: Displays only the required settings.
ADVANCED: Displays all settings.

Using monitor audio level mode (MONITOR MODE)

When this function is enabled, the display shows the monitor audio level screen (fixed). Using the + or – button changes the monitor audio level only.

1 Use the + or – button to display the MONITOR MODE menu.

2 Press and hold the SET button for one second or longer.

3 Use the + or – button to display "ON," and press the SET button.

Monitor audio level mode is activated, and is displayed.

To release monitor audio level mode

1 Press and hold the SET button, POWER button, or NFC SYNC button for one second or longer until "ESCAPE?" Is displayed.

2 Use the + or – button to display "YES," and press the SET button.

The lock state is released.

Notes

- This function is displayed in extended mode only.
- This function is released when the power is turned off. Reconfigure the setting after the power is turned on.

Switching to the previous channel (CH MEMORY)

You can switch to the previously set channel. This is useful when using one tuner in combination with two transmitters.
Set the channel you want to use beforehand.

For details about how to set the channel, see "Setting the receive channel" (page 21).

1 Use the + or – button to display the CH MEMORY menu.

2 Press and hold the SET button until "YES?" starts flashing.

3 Press the SET button.

The previously set channel and the currently set channel are displayed.

Use the + or – button to toggle between the channels.

To exit the CH MEMORY function

1. Press and hold the SET button until "CANCEL?" Is displayed.
2. Use the + or – button to display "YES," and press the SET button.

   The display returns to the CH MEMORY menu.

Notes

- This function is displayed in extended mode only.
- If this function is enabled with the factory default channel settings, two factory default channels are displayed.
- The NFC SYNC button is disabled while using this function. Disable this function first if you want to use the NFC SYNC button.
- When BAND is changed, the default channel in the new band is stored as the previously set channel.

Selecting the preferred power supply (POWER SOURCE)

Specifies whether the power supply from the batteries inserted in the unit or from an external USB portable power supply or accessory connected to the USB connector or auxiliary connector has precedence.
BATT -> EXT: Batteries inserted in the unit have precedence.
EXT -> BATT: Power supplied from a USB connector or externally connected sources have precedence.
BATT ONLY: Batteries inserted in the unit are used, and power supplied from the USB connector or auxiliary connector is not used even after the batteries are discharged.

Notes

- When BATT -> EXT or EXT -> BATT is specified and power from the preferred source is cut off, the power supply automatically switches to the other source. Therefore, when only one power supply is available, that power supply will be used regardless of the POWER SOURCE setting. There may be a brief interruption in the audio when the power supply switches.
- When power is supplied from both the USB connector and an external connection connector, select the supply from the USB connector.

Setting the frequency to an active channel (ACT CH SCAN)

Searches for channels already in use. This is useful when using more than one tuner in combination with a single transmitter.

Note

This function is displayed in extended mode only.

For details, see "Searching for active channels within a group (Active Channel Scan)" (page 22).

Setting the compander mode (COMPANDER)

Sets the operating mode of the compander.
UWP-D: High speech quality mode supported in combination with UWP-D series devices.
UWP: Mode supported in combination with Sony UWP-series transmitters.
WL800: Mode supported in combination with Sony 800-series transmitters.

Notes

- This function is displayed in extended mode only.
- No audio is output if the tone signal frequency is different due to the use of a combination of devices with different compander mode settings.

Setting the battery type (BATTERY TYPE)

You can set the type of battery being used in order to provide a more accurate battery level indication.

TYPE1: Recommended setting when using alkaline LR6 (size AA) batteries. Indicates the battery level based on the characteristics of new Sony alkaline LR6 (size AA) batteries.
TYPE2: Recommended setting when using rechargeable nickel metal hydride batteries.
TYPE3: Recommended setting when using lithium batteries.

Notes

- This function is displayed in extended mode only.
- The characteristics of batteries change according to battery type and environmental conditions. It is recommended that you understand the characteristics of batteries before using them.

Changing the display settings (DISPLAY MODE)

Changes the display mode of the OLED display when 30 seconds have elapsed without any button activity.
AUTO OFF: If no button operation is performed for 30 seconds, the display will turn off. Press a button to turn on the display again.
DIMMER: If no button operation is performed for 30 seconds, the display will dim. Press a button to turn on the display again.

Note

This function is displayed in extended mode only.

Setting the display brightness (BRIGHTNESS)

Adjusts the brightness of the OLED display using ten levels.
The configurable values are given below.
(Dark) **1 2 3 4 5 6 7 8 9 10** (Bright)

Note

This function is displayed in extended mode only.

Restoring factory default settings (FCT RESET)

Restores all parameters to their factory default settings. Press and hold the SET button. A prompt appears asking you whether to restore factory default settings. Press the + or – button to select YES, then press the SET button. The tuner parameters are restored to their factory default settings.

Notes

- This function is displayed in extended mode only.
- After a reset, the audio output level and monitor output level are also restored to their factory default settings. Note that this may cause the volume on connected devices and in headphones to suddenly change.

Displaying the software version (VERSION)

Displays the software version of the tuner.

Note

This function is displayed in extended mode only.

Transmitter Settings

Menu structure and operation

Procedure for all transmitters (UTX-B40/M40/P40)

There are three menu display modes that can be selected according to the application.

Simple mode

This mode displays only the required settings for transmitting audio.
You can enable simple mode by setting MENU MODE (menu display mode) to SIMPLE.

Configuration menus

- GP/CH (group/channel) select
- BAND (frequency band) select (Not available on Japanese and Korean models)
- ATTENUATOR (attenuator) setting
- GAIN MODE (audio gain) setting
- LCF (low-cut filter) setting
- INPUT LEVEL (audio input level) select (UTX-B40/P40 only)
- RF POWER (RF transmit output level) select
- +48V SUPPLY (+48 V power supply) setting (UTX-P40 only)
- POWER LOCK (POWER button lock) function
- RUNNING TIME (accumulated running time) display
- MENU MODE (menu display mode) setting

Note

The following configuration menus cannot be modified during transmission. Set these menus in transmission stopped mode.

- GP/CH (group/channel) select
- BAND (frequency band) select (Not available on Japanese and Korean models)
- RF POWER (RF transmit output level) select

Extended mode

This mode displays all configuration menus.
You can enable extended mode by setting MENU MODE (menu display mode) to ADVANCED.

Note

The existing settings configured in extended mode are active even when using simple mode.

Configuration menus

- GP/CH (group/channel) select
- BAND (frequency band) select (Not available on Japanese and Korean models)
- ATTENUATOR (attenuator) setting
- GAIN MODE (audio gain) setting
- LCF (low-cut filter) setting
- INPUT LEVEL (audio input level) select (UTX-B40/P40 only)

- RF POWER (RF transmit output level) select
- +48V SUPPLY (+48 V power supply) setting (UTX-P40 only)
- POWER LOCK (POWER button lock) function
- RUNNING TIME (accumulated running time) display
- MENU MODE (menu display mode) setting
- MUTE SETTING (audio muting setting) function (UTX-B40/P40 only)
- POWER/MUTE (power supply / audio muting) setting (UTX-M40 only)
- AUDIO PHASE (phase switching) setting (UTX-B40 only)
- COMPANDER (compander mode) setting
- OCUPNCY SENS (motion detection sensor mode) setting
- BATTERY TYPE (battery type) setting
- DISPLAY MODE (display setting) function
- BRIGHTNESS (display brightness) setting
- FCT RESET (factory default setting) function
- VERSION (software version) display

Note

The following configuration menus cannot be modified during transmission. Set these menus in transmission stopped mode.
- GP/CH (group/channel) select
- BAND (frequency band) select (Not available on Japanese and Korean models)
- RF POWER (RF transmit output level) select
- FCT RESET (factory default setting) function

Transmission stopped mode

This mode allows settings to be modified when RF transmission has stopped.
Use this mode to make settings without risk of interrupting other wireless traffic when setting channels and other settings.
With the power off, press and hold the SET button and press the POWER button or POWER/MUTE button for at least one second to turn the power on and to display the transmission stopped mode menu.
The following configuration menus can only be modified in transmission stopped mode.
- GP/CH (group/channel) select
- BAND (frequency band) select (Not available on Japanese and Korean models)
- RF POWER (RF transmit output level) select
- FCT RESET (factory default setting) function

Basic menu operation

The basic menu operation is the same in simple mode, extended mode, and transmission stopped mode.

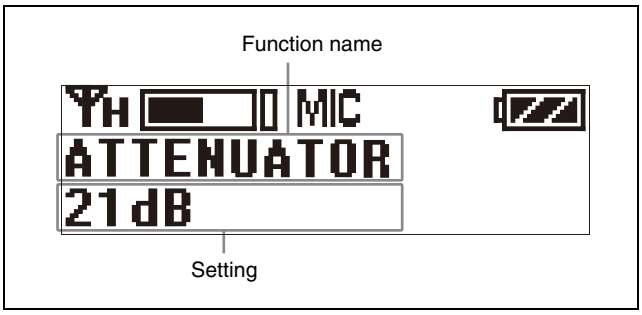

1 Press the + or – button to display the function to be set.

2 Press and hold the SET button until the setting starts flashing.

3 Press the + or – button to change the setting.

4 Press the SET button to enter the setting.

Note

If no operation is performed for 30 seconds, the display will turn off or will dim. Pressing any button will turn the display on again.

For details about display settings, see "Changing the display settings (DISPLAY MODE)" (page 30).

Setting the transmit channel

Procedure for all transmitters (UTX-B40/M40/P40)

For details about the channel groups and channels that can be selected, refer to the "Frequency List" on the CD-ROM.

1 Press and hold the SET button and press the POWER button or POWER/MUTE button to turn the power on.

2 Use the + or – button to display the GP/CH menu.

3 Press and hold the SET button for one second or longer.

Press and hold until the channel group display starts flashing.

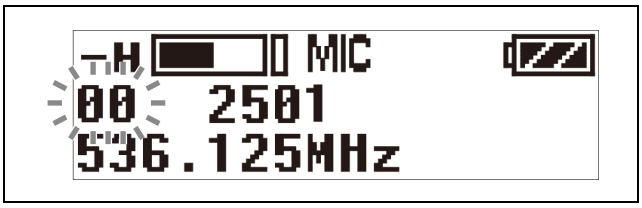

4 Use the + or – button to select the desired group name, then press the SET button.

The channel group is set, and the channel number display starts flashing.

5 Use the + or – button to select the desired channel number, then press the SET button.

The displays stops flashing and the desired channel is set.

Notes

- If there is no user input within ten seconds after the channel group display or channel number display starts flashing, the displayed setting that is flashing is saved. The same applies when setting other parameters.
- The frequency indicator changes in response to the channel number.
- Do not remove the batteries while making settings. If they are removed, re-insert them and repeat the procedure from the beginning.
- Make sure that the same channel is set on the transmitter and tuner within the same system.

Configuration menu

Procedure for all transmitters (UTX-B40/M40/P40)

This section describes each function and configurable items.
Underlined entries indicate factory default settings.

Selecting group/channel (GP/CH)

The factory default setting varies depending on the model.

For details, see "Setting the transmit channel" (page 27).

Note

This function can be modified in transmission stopped mode only.

Selecting the frequency band (BAND)

Selects the transmit frequency band.

Notes

- This function can be modified in transmission stopped mode only.
- This menu is not available on Japanese and Korean models. On these models, the frequency band cannot be selected.

For details about the groups and channels in each frequency band, refer to the "Frequency List" on the CD-ROM.

Adjusting the audio input attenuation level (ATTENUATOR)

You can set the audio input attenuation level in 3 dB increments to reduce noise distortion.
The factory default setting is 9 dB on the UTX-B40, and 0 dB on the UTX-M40/P40.

Notes

- On the UTX-B40/P40, "---" is displayed if INPUT LEVEL is set to LINE and GAIN MODE is set to AUTO GAIN, and the attenuation level cannot be modified (fixed).
- If the attenuation level is set too high, the noise level may increase. Set the level as close as possible to 0 dB if using a lavalier microphone attached to your torso.

Setting the audio gain (GAIN MODE)

AUTO GAIN: Sets the gain high, and uses a limiter to help prevent distortion.
NORMAL: Enables adjustment of the attenuation level. The attenuator can be adjusted to match the connected microphone.
15dB BOOST: Boosts the gain by 15 dB for when the microphone is not near the person's mouth and the audio level is insufficient.

Notes

- On the UTX-B40/P40, "---" is displayed if INPUT LEVEL is set to LINE, and the audio gain cannot be modified.
- When GAIN MODE is set to AUTO GAIN, the ATTENUATOR setting cannot be modified.
- Changing the GAIN MODE setting may cause the volume on devices connected to the tuner and in headphones to suddenly change.

Setting the low-cut filter (LCF)

You can set the low-cut filter to reduce noise caused by wind.
You can set the cutoff frequency to OFF/LOW/MID/HIGH.
OFF: No filtering
LOW: 100 Hz cutoff frequency
MID: 150 Hz cutoff frequency
HIGH: 200 Hz cutoff frequency

Switching the audio input level (INPUT LEVEL) (UTX-B40/P40 only)

Sets the input level according to the audio input device. You can switch between MIC and LINE. The factory default setting is MIC.

Notes

- Do not switch this function to "MIC" when the audio input source is an audio mixer or other line level device. If an excessive audio level is input, it may cause noise distortion or damage the playback/recording equipment.

- "---" is displayed for ATTENUATOR and GAIN MODE if INPUT LEVEL is set to LINE, and the settings cannot be modified.

Setting the transmit output level (RF POWER)

Set the transmitted RF power to HIGH or LOW. The transmit power level varies depending on the model.

Note

This function can be modified in transmission stopped mode only.

Setting the microphone drive power supply (+48V SUPPLY) (UTX-P40 only)

You can supply power from the transmitter when using a microphone that requires an external power supply.
When set to ON, power is supplied to the connected microphone and the +48 V indicator lights.
The factory default setting is OFF.

Locking the POWER button (POWER LOCK)

You can lock the POWER button to prevent the power being turned off inadvertently during transmission.
UNLOCK: Press and hold the POWER button to turn the power on/off.
LOCK: The power does not turn off, even after pressing the POWER button.

To release the lock state

To release the lock state, either set the POWER LOCK menu to UNLOCK or use the following procedure.

1. When the button is in the LOCK state, press and hold the POWER button.

   A prompt appears asking you whether to release the lock state.

2. Use the + or – button to select YES, then press the SET button.

   The power turns off.

Note

If the batteries are removed and reinserted while the POWER button is set to LOCK, the power will turn on automatically but the lock state of the POWER button does not change.

Displaying the accumulated running time (RUNNING TIME)

Displays the accumulated running time of the transmitter as a guide to total usage time.
The factory default setting is 00:00. Up to 99:99 can be displayed.

To reset the time display

1. Press and hold the SET button until the time display starts flashing.

2. Press the – button to display "00:00 CLR" and press the SET button.

   Pressing the + button when "00:00 CLR" is displayed causes the time display to start flashing. You can press the SET button in this state to cancel the reset of the accumulated running time.

Setting the menu display mode (MENU MODE)

Sets the menu display mode.
SIMPLE: Displays only the required settings.
ADVANCED: Displays all settings.

Setting the operation of the audio muting function (MUTE SETTING) (UTX-B40/P40 only)

Pressing the MUTE button while transmitting mutes the audio so that audio from the tuner is not output.
This function sets whether the audio is muted for various operations of the MUTE button.
MUTE(ALT): Audio is muted when the MUTE button is pressed. Pressing the MUTE button again restores the audio output.
MUTE HOLD: Audio is muted while the MUTE button is pressed, and audio is output when the MUTE button is released.
PTT HOLD: Audio is output while the MUTE button is pressed, and audio is muted when the MUTE button is released.
DISABLE: Audio is muted regardless of the MUTE button operation.

Setting the operation of the audio muting function (POWER/MUTE) (UTX-M40 only)

Pressing the POWER/MUTE button while transmitting mutes the audio so that audio from the tuner is not output.
This function sets whether the audio is muted for various operations of the POWER/MUTE button and whether the power is turned on/off using the POWER/MUTE button.
POWER/MUTE: Audio is muted when the POWER/MUTE button is pressed. Pressing the POWER/MUTE button again restores the audio output. The power can be turned on/off by pressing and holding the POWER/MUTE button for one second or longer.
MUTE(ALT): Audio is muted when the POWER/MUTE button is pressed. Pressing the POWER/MUTE button again restores the audio output. The power cannot be turned on/off using the POWER/MUTE button.
MUTE HOLD: Audio is muted while the POWER/MUTE button is pressed, and audio is output when the POWER/MUTE button is released. The power cannot be turned on/off using the POWER/MUTE button.

PTT HOLD: Audio is output while the POWER/MUTE button is pressed, and audio is muted when the POWER/MUTE button is released. The power cannot be turned on/off using the POWER/MUTE button.
DISABLE: Audio is muted regardless of the POWER/MUTE button operation. Also, the power cannot be turned on/off.

Switching the phase of the microphone (AUDIO PHASE) (UTX-B40 only)

You can switch the phase of a connected microphone (excluding the supplied lavalier microphone) to output audio in reverse phase.
NORMAL: Phase is not reversed. Set to NORMAL when the supplied lavalier microphone is connected.
INVERT: Reverses the phase within the transmitter.

Note

This function is displayed in extended mode only.

Setting the compander mode (COMPANDER)

Sets the operating mode of the compander.
UWP-D: High speech quality mode supported in combination with UWP-D series devices.
UWP: Mode supported in combination with Sony UWP-series tuners.
WL800: Mode supported in combination with Sony 800-series tuners.

Notes

- This function is displayed in extended mode only.
- No audio is output if the tone signal frequency is different due to the use of a combination of devices with different compander mode settings.

Setting motion detection sensor mode (OCUPNCY SENS)

Sets whether to enable motion detection sensor mode using ultrasonic sound.
When set to ON, a high-cut filter is activated to reduce noise.
The factory default setting is OFF.

Setting the battery type (BATTERY TYPE)

You can set the type of battery being used in order to provide a more accurate battery level indication.

TYPE1: Recommended setting when using alkaline LR6 (size AA) batteries. Indicates the battery level based on the characteristics of new Sony alkaline LR6 (size AA) batteries.
TYPE2: Recommended setting when using rechargeable nickel metal hydride batteries.
TYPE3: Recommended setting when using lithium batteries.

Notes

- This function is displayed in extended mode only.
- The characteristics of batteries change according to battery type and environmental conditions. It is recommended that you understand the characteristics of batteries before using them.

Changing the display settings (DISPLAY MODE)

Changes the display mode of the OLED display when 30 seconds have elapsed without any button activity.
AUTO OFF: If no button operation is performed for 30 seconds, the display will turn off. Press a button to turn on the display again.
DIMMER: If no button operation is performed for 30 seconds, the display will dim. Press a button to turn on the display again.

Note

This function is displayed in extended mode only.

Setting the display brightness (BRIGHTNESS)

Adjusts the brightness of the OLED display using ten levels.
The configurable values are given below.
(Dark) **1 2 3 4 5 6 7 8 9 10** (Bright)

Note

This function is displayed in extended mode only.

Restoring factory default settings (FCT RESET)

Restores all parameters to their factory default settings. Press and hold the SET button. A prompt appears asking you whether to restore factory default settings. Press the + or – button to select YES, then press the SET button. The transmitter parameters are restored to their factory default settings.

Notes

- This function can be used in transmission stopped mode only.
- After a reset, the audio input level is also restored to its factory default setting. Note that this may cause the volume on devices connected to the tuner and in headphones to suddenly change.

Displaying the software version (VERSION)

Displays the software version of the transmitter.

Note

This function is displayed in extended mode only.

System Configuration Example

The following is a configuration example for use with UWP-D series devices.

Sample configuration for ENG (Electronic News Gathering) or EFP (Electronic Field Production) with a camcorder

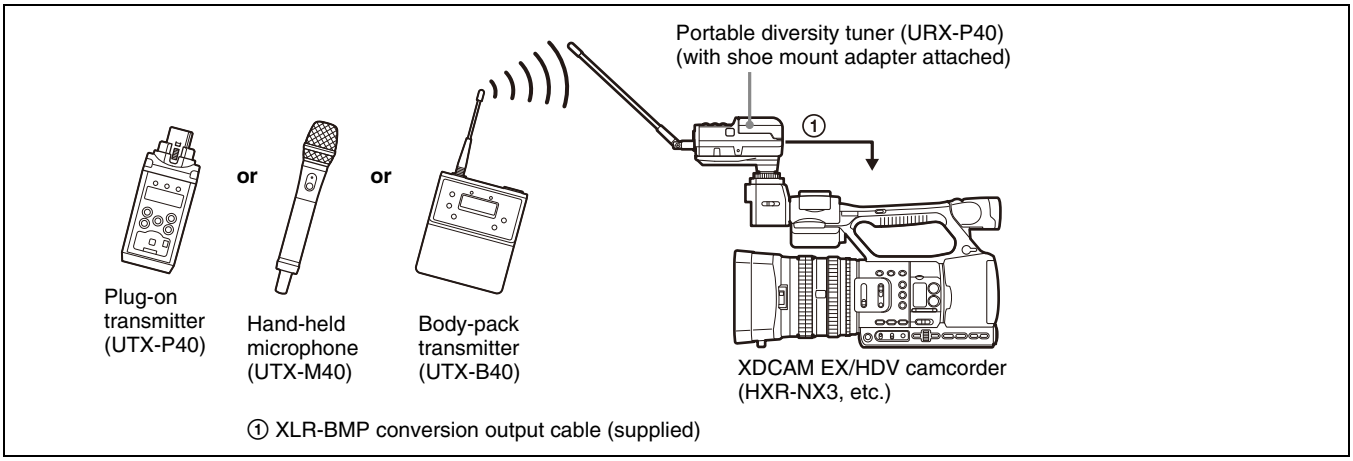

Error Messages

When a problem occurs, one of the following error messages may appear on the display.

Message	Meaning	Solution
EEP ERROR	An error has occurred in the backup memory data.	Contact your point of purchase or Sony service representative.
PLL ERROR	An error occurred in the PLL synthesizer circuit.	Restart the unit. If the message persists, contact your point of purchase or Sony service representative.
NO TONE	Audio signal output has been muted, because a tone signal different from the compander mode configured on the tuner was received.	Configure the appropriate compander mode based on the transmitters you are using *"Setting the compander mode (COMPANDER)" (page 25)*. When operating in conjunction with UWP-D series transmitters (UTX-B40, UTX-M40, etc.), set the tuner and the transmitters to the same compander mode.

Troubleshooting

If you have any problem, use the following checklist before asking for repairs. If the problem persists, contact your point of purchase or Sony service representative.

Symptom	Cause	Solution
The unit does not turn on.	The ⊕ and ⊖ polarity orientation of the batteries is incorrect.	Insert the batteries with the correct polarity orientation.
	The batteries are getting low.	Replace the batteries with new ones.
	The battery terminals are dirty.	Clean the ⊕ and ⊖ terminals, and the battery compartment terminals[4] with a cotton swab.
	Batteries are not inserted despite POWER SOURCE being set to BATT ONLY.[3]	Insert batteries, or change the POWER SOURCE setting.
The unit does not turn off.	The POWER/MUTE button is locked.[5]	Release the locked status in the POWER LOCK menu.
	The unit is set so that power cannot be turned on/off using the POWER/MUTE button.[6]	Set the POWER/MUTE menu to POWER/MUTE, or turn the unit off using the POWER button.
The batteries become drained quickly.	The batteries are getting low.	Replace the batteries with new ones.
	Manganese batteries are being used.	Use alkaline batteries. The battery life of a manganese battery is less than half that of an alkaline battery.
	The device is being used under cold conditions.	The batteries drain quickly under cold conditions.
The channel cannot be changed.[1]	The unit is not in transmission stopped mode.	Turn off the unit, and then turn it on again while holding down the SET button to switch to transmission stopped mode.
There is no sound.	The channel setting on the transmitter is different from that on the tuner.	Use the same channel setting on both the transmitter and tuner.
	The transmitter is not transmitting signals, or the transmission output is weak.	Confirm that the transmitter is turned on. Alternatively, reduce the distance between the transmitter and tuner.
	The transmitter is set to line level input.[2]	Switch to microphone input.
	The compander mode setting on the transmitter is different from that on the tuner.	Use the same compander mode setting on both the transmitter and tuner.
	The transmitter is muted.[1]	Press the POWER/MUTE button on the transmitter to release the muted state.
		The MUTE SETTING menu (POWER/MUTE menu on the UTX-M40) is set to PTT HOLD. Change the setting.
The sound is weak.	The attenuation level on the transmitter is too high.	The input level of the transmitter is low. Set the attenuation of the transmitter to an appropriate level.
	The volume on the amplifier or mixer is low.	Adjust the volume to an appropriate level.
	The transmitter is set to line level input.[2]	Switch to microphone input.
	The compander mode setting on the transmitter is different from that on the tuner.	Use the same compander mode setting on both the transmitter and tuner.
The sound is distorted.	The attenuation level on the transmitter is too low or is set to 0.	The input level is extremely high. Set the attenuation on the transmitter so that the audio is not distorted.
	The GAIN MODE menu of the transmitter is set to 15dB BOOST.	The input level is extremely high. Change the GAIN MODE setting so that the sound is not distorted.
	The channel setting on the transmitter is different from that on the tuner.	Use the same channel setting on both the transmitter and tuner.
	Headphones with a monaural mini jack are being used.[3]	Use headphones with a stereo mini jack.

Symptom	Cause	Solution
The attenuator cannot be set.	The GAIN MODE menu is set to AUTO GAIN, or the INPUT LEVEL menu is set to LINE.	Change the GAIN MODE menu and INPUT LEVEL menu settings.
There is sound interruption or noise.	The channel setting on the transmitter is different from that on the tuner.	Use the same channel setting on both the transmitter and tuner.
	Two or more transmitters are set to the same channel.	Two or more transmitters cannot be used on the same channel. Refer to the frequency list stored on the supplied CD-ROM, and reconfigure the channel on each transmitter.
	The transmitters are not set to the channels within the same channel group.	The channel plan is set so that no signal interference occurs when two or more transmitters are used simultaneously. Set each transmitter to a different channel within the same channel group.
	Adjacent channels are being used.	Use the channels separated by at least two channels (250 kHz).
The RF indicator on the tuner lights up even when the transmitter is off.	Jamming radio waves are being received.	Set the channel on the tuner to a channel for which the RF indicator does not light, or use the Clear Channel Scan function to switch to a channel without interference. Then, set the transmitter to the same channel as the tuner. If using two or more transmitters, change to a channel group that is not affected.
The transmitter channel cannot be set with infrared transmission.[1]	The infrared receptor on the transmitter is too far from the infrared transmission port on the tuner.	Reduce the distance between the infrared receptor on the transmitter and the infrared transmission port on the tuner to within about 20 cm (8 in.).
	Interference from infrared communications between other devices or from direct sunlight is present.	The transmitting distance is reduced when interference from strong sunlight, for example, is present. Place the transmitter and tuner as close to each other as possible.
The transmitter channel cannot be set via NFC communication.	The N-Marks of both units are not facing each other, or they are too far apart. Or there may be some metallic object between the N-Marks.	Place the N-Marks approximately 5 mm from each other. Make sure there are no metallic or other objects near them.
	The grip is open.[6]	

1) Body-pack transmitter (UTX-B40) / hand-held microphone (UTX-M40) / plug-on transmitter (UTX-P40) only
2) Body-pack transmitter (UTX-B40) / plug-on transmitter (UTX-P40) only
3) Portable diversity tuner (URX-P40) only
4) Body-pack transmitter (UTX-B40) / portable diversity tuner (URX-P40) only
5) Body-pack transmitter (UTX-B40) / plug-on transmitter (UTX-P40) / portable diversity tuner (URX-P40) only
6) Hand-held microphone (UTX-M40) only

Important Notes on Use

The NFC communication function is used only for communication between a transmitter and a tuner. It cannot be used for communication with other devices.

Usage and storage

- Operating the UWP-D series devices near electrical equipment (motors, transformers, or dimmers) may cause interference due to electromagnetic induction. Keep the devices as far from such equipment as possible.
- The presence of lighting equipment may produce electrical interference over a wide frequency range. In this case, interference may fluctuate with the position of the tuner antenna and position of the transmitter. Position the devices so that interference is minimized.
- To avoid degradation of the signal to noise ratio, do not use UWP-D devices in noisy places or in locations subject to vibration, such as the following:
  – Near electrical equipment, such as motors, transformers, or dimmers
  – Near air conditioning equipment or places subject to direct air flow from an air conditioner
  – Near PA (public address) loudspeakers
  – Near equipment that might knock against the tuner
  Keep devices as far from such equipment as possible or use buffering material.

Cleaning

Clean the surface and the connectors of devices with a dry, soft cloth. Never use thinners, benzene, alcohol, or any other chemicals, since these may mar the finish.

To prevent electromagnetic interference
Some channels may be unable to be used due to noise generated due to the effects of external noise and/or radio interference. In this case, it is recommended to stop transmitting (turn the power off) or change to another frequency (change channel).

To prevent electromagnetic interference from portable communication devices
The use of portable telephones and other communication devices near the devices may result in malfunction and interference with audio signals. It is recommended that portable communication equipment near the devices be turned off.

Specifications

The N-Mark is a trademark or registered trademark of NFC Forum, Inc. in the United States and in other countries.

Design and specifications are subject to change without notice.

Notes
- Always verify that the unit is operating properly before use. SONY WILL NOT BE LIABLE FOR DAMAGES OF ANY KIND INCLUDING, BUT NOT LIMITED TO, COMPENSATION OR REIMBURSEMENT ON ACCOUNT OF THE LOSS OF PRESENT OR PROSPECTIVE PROFITS DUE TO FAILURE OF THIS UNIT, EITHER DURING THE WARRANTY PERIOD OR AFTER EXPIRATION OF THE WARRANTY, OR FOR ANY OTHER REASON WHATSOEVER.
- SONY WILL NOT BE LIABLE FOR CLAIMS OF ANY KIND MADE BY USERS OF THIS UNIT OR MADE BY THIRD PARTIES.
- SONY WILL NOT BE LIABLE FOR THE TERMINATION OR DISCONTINUATION OF ANY SERVICES RELATED TO THIS UNIT THAT MAY RESULT DUE TO CIRCUMSTANCES OF ANY KIND.

Transmitter (UTX-B40/M40/P40)

Items common to all transmitters

Oscillator type Crystal-controlled PLL synthesizer
Carrier frequencies
14UC model: 470 MHz to 542 MHz
25UC model: 536 MHz to 608 MHz
90U model: 941.625 MHz to 951.875 MHz, 953.000 MHz to 956.125 MHz, and 956.625 MHz to 959.625 MHz
21CE model: 470 MHz to 542 MHz
33CE model: 566 MHz to 630 MHz
42CE model: 638 MHz to 694 MHz
42LA model: 638 MHz to 698 MHz
38CN model: 710 MHz to 782 MHz
KR model: 925 MHz to 937.5 MHz
E model: 794 MHz to 806 MHz
Preemphasis 50 µs
Reference frequency deviation
±5 kHz (–60 dBV, 1 kHz input)
Distortion 0.9% or less (–60 dBV, 1 kHz input)
Signal-to-noise ratio
60 dB (–60 dBV, 1 kHz input)
102 dB (GAIN MODE set to AUTO GAIN, max.)
96 dB (GAIN MODE set to NORMAL, max.)

Voice delay 0.35 ms
Tone signal frequency
In UWP-D compander mode: 32.382 kHz
In UWP compander mode: 32 kHz
In WL800 compander mode: 32.768 kHz
Supply voltage 3.0 V DC (two LR6/AA size alkaline batteries)
5.0 V DC (supplied from USB connector)
Operating temperature
0 °C to 50 °C (32 °F to 122 °F)
Storage temperature
–20 °C to +55 °C (–4 °F to +131 °F)

Body-pack transmitter (UTX-B40)

Antenna 1/4 λ wavelength wire antenna
Audio input connector
3.5 mm diameter mini jack
Reference audio input level
–60 dBV (MIC input, GAIN MODE set to NORMAL, 0 dB attenuation)
RF output level 30 mW/5 mW selectable (UC, U, CE, LA, CN models)
10 mW/2 mW selectable (E, KR models)
Frequency response
40 Hz to 18 kHz
Attenuation 0 dB to 27 dB (3 dB steps)
Indicators POWER, AUDIO/MUTE
Battery life (measured with two Sony LR6/AA size alkaline batteries at 25 °C (77 °F), DISPLAY MODE set to AUTO OFF)
Approx. 8 hours with output power of 30 mW (UC, U, CE, LA, CN models)
Approx. 10 hours with output power of 10 mW (E, KR models)
Dimensions

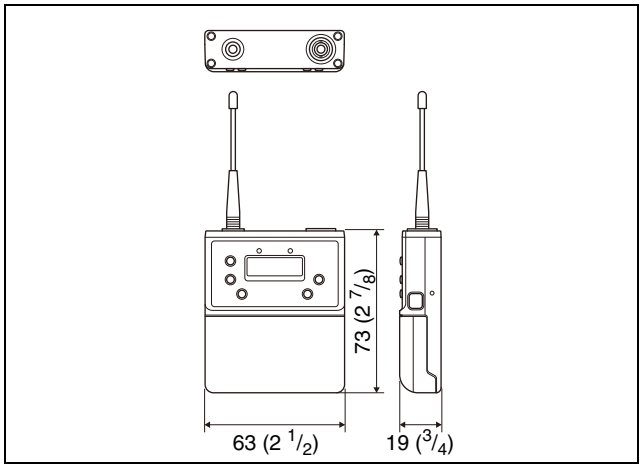

63 × 73 × 19 mm (2 $^{1}/_{2}$ × 2 $^{7}/_{8}$ × $^{3}/_{4}$ in.)
(width / height / depth)
(excluding antenna)

Mass Approx. 83 g (2.9 oz)
(excluding batteries)

Lavalier microphone (ECM-V1BMP)

Type Electret condenser microphone
Frequency response
40 Hz to 20,000 Hz
Directivity Omni-directional
Sensitivity –43.0 dB ±3 dB
(0 dB = 1 V/Pa, at 1 kHz)
Operating temperature
0 °C to 50 °C (32 °F to 122 °F)
Storage temperature
–20 °C to +55 °C (–4 °F to +131 °F)
Cable 2.3 mm diameter, 2-conductor shielded cable, 1.2 m (3.9 feet) long
Dimensions ø6.8 × 19.5 mm ($^{9}/_{32}$ × $^{25}/_{32}$ in.)
(without cable and connector)
Mass Approx. 16.2 g (0.57 oz)

Hand-held microphone (UTX-M40)

Microphone unit
Dynamic
Directivity Unidirectional
Antenna 1/4 λ wavelength wire antenna
Reference audio input level
–55 dBV (GAIN MODE set to NORMAL, 0 dB attenuation)
RF output level 30 mW/5 mW selectable (UC, U, CE, LA, CN models)
10 mW/2 mW selectable (E, KR models)
Frequency response
70 Hz to 18 kHz
Attenuation 0 dB to 21 dB (3 dB steps)
Indicator POWER/MUTE
Battery life (measured with two Sony LR6/AA size alkaline batteries at 25 °C (77 °F), DISPLAY MODE set to AUTO OFF)
Approx. 8 hours with output power of 30 mW (UC, U, CE, LA, CN models)
Approx. 10 hours with output power of 10 mW (E, KR models)
Dimensions

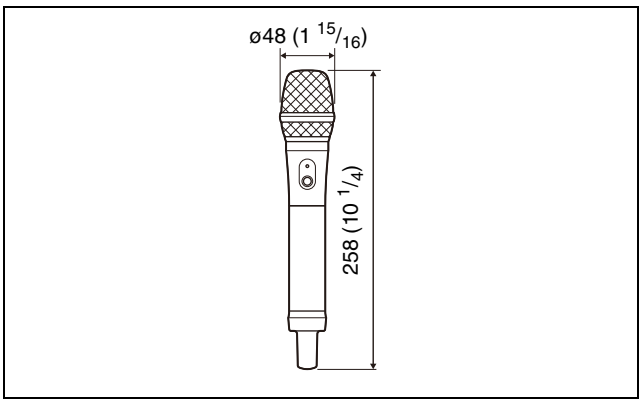

ø48 × 258 mm (1 $^{15}/_{16}$ × 10 $^{1}/_{4}$ in.)
(diameter / length)

Mass Approx. 255 g (9.0 oz) (excluding batteries)

Plug-on transmitter (UTX-P40)

Reference audio input level
–60 dBV (MIC input, GAIN MODE set to NORMAL, 0 dB attenuation)
RF output level
40 mW/5 mW selectable (UC, U, LA models)
30 mW/5 mW selectable (CE, CN models)
10 mW/2 mW selectable (E, KR models)
Frequency response
50 Hz to 18 kHz
Attenuation 0 dB to 48 dB (3 dB steps)
Audio input connector
XLR-3-11C type (female)
Indicators POWER, AUDIO/MUTE, +48V
Battery life (measured with two Sony LR6/AA size alkaline batteries at 25 °C (77 °F), DISPLAY MODE set to AUTO OFF)
During +48V OFF:
Approx. 7 hours with output power of 40 mW (UC, U, LA models)
Approx. 8 hours with output power of 30 mW (CE, CN models)
Approx. 10 hours with output power of 10 mW (E, KR models)
During +48V ON and ECM-673 connection:
Approx. 6 hours with output power of 40 mW (UC, U, LA models)
Approx. 6 hours with output power of 30 mW (CE, CN models)
Approx. 7 hours with output power of 10 mW (E, KR models)
Dimensions

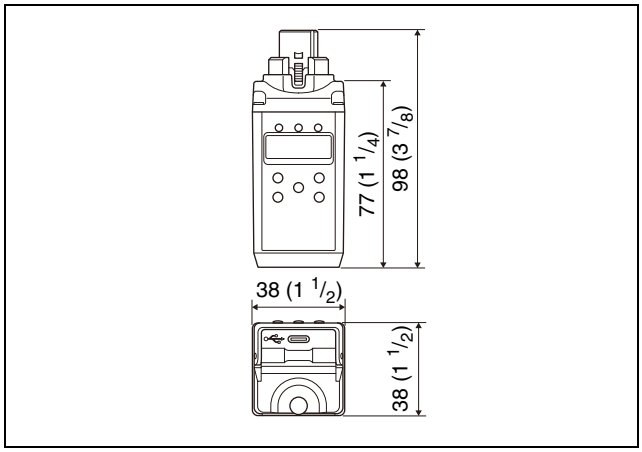

38 × 98 × 38 mm (1 1/2 × 3 7/8 × 1 1/2 in.) (width / height / depth) (including the audio input connector)
Mass Approx. 139 g (4.9 oz) (excluding batteries)

Tuner

Portable diversity tuner (URX-P40)

Antenna 1/4 λ wavelength wire antenna (angle-adjustable)
Audio output level
–60 dBV (3.5 mm diameter mini jack, analog output)
–20 dBFS (external connection, digital output)
–50 dBFS (external connection, analog output)
Audio output connector
3.5 mm diameter mini jack, external connection
Headphone output level
5 mW (16 Ω)
Reception method
True diversity method
Local oscillator Crystal-controlled PLL synthesizer
Receive frequencies
14UC model: 470 MHz to 542 MHz
25UC model: 536 MHz to 608 MHz
90U model: 941.625 MHz to 951.875 MHz, 953.000 MHz to 956.125 MHz, and 956.625 MHz to 959.625 MHz
21CE model: 470 MHz to 542 MHz
33CE model: 566 MHz to 630 MHz
42CE model: 638 MHz to 694 MHz
42LA model: 638 MHz to 698 MHz
38CN model: 710 MHz to 782 MHz
KR model: 925 MHz to 937.5 MHz
E model: 794 MHz to 806 MHz
Signal-to-noise ratio
60 dB (1 kHz sine wave, 5 kHz modulation)
Voice delay 0.35 ms (analog output)
0.24 ms (digital output)
Deemphasis 50 µs
Reference frequency deviation
±5 kHz
Frequency response
40 Hz to 18 kHz
Distortion 0.9% or less (1 kHz sine wave, 5 kHz modulation)
Tone signal In UWP-D compander mode: 32.382 kHz
In UWP compander mode: 32 kHz
In WL800 compander mode: 32.768 kHz
Indicators POWER, RF
Operating temperature
0 °C to 50 °C (32 °F to 122 °F)
Storage temperature
–20 °C to +55 °C (–4 °F to +131 °F)
Supply voltage 3.0 V DC (two LR6/AA size alkaline batteries)
5.0 V DC (supplied from USB connector)

Battery life Approx. 6 hours (measured with two Sony LR6/AA size alkaline batteries at 25 °C (77 °F), DISPLAY MODE set to AUTO OFF)

Dimensions

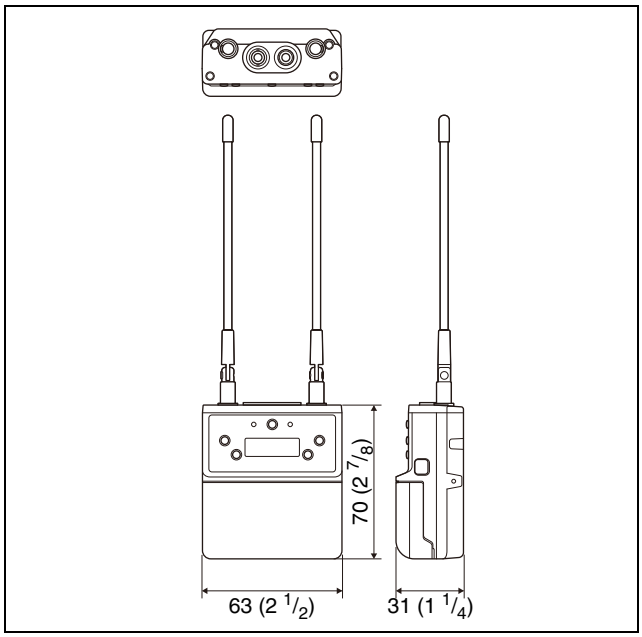

63 × 70 × 31 mm (2 1/2 × 2 7/8 × 1 1/4 in.) (width / height / depth) (excluding antenna)

Mass Approx. 131 g (4.6 oz) (excluding batteries)

http://www.sony.net/

Sony Corporation