SONY

5-055-692-**11**(1)

AV RECEIVER

Operating Instructions	EN
Mode d'emploi	FR
Manual de instrucciones	ES

Owner's Record

The model and serial numbers are located on the bottom of the unit.
Record the serial number in the space provided below.
Refer to these numbers whenever you call upon your Sony dealer regarding this product.

Model No. XAV-3600

Serial No. _____

To cancel the demonstration (Demo) display, see page 6.

Pour annuler l'affichage de démonstration (Démo), reportez-vous à la page 7.

Para cancelar la pantalla de demostración (Demostración), consulte la página 7.

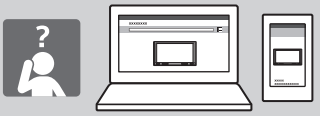

XAV-3600(UC)

https://rd1.sony.net/help/ev/xav-ax32/h_zz/

* 5 0 5 5 6 9 2 1 1 * (1)

XAV-3600

Warning

For safety, be sure to install this unit in the dashboard of the car as the rear side of the unit becomes hot during use.
For details, see "Connection/Installation" (page 9).

FOR CUSTOMERS IN CANADA (INCLUDING IN THE PROVINCE OF QUEBEC) ALL INSTRUCTIONS AND STATEMENTS WHICH ARE NECESSARY FOR CANADIAN CUSTOMERS ARE PROVIDED IN ENGLISH AND FRENCH. OTHER INSTRUCTIONS AND STATEMENTS NOT PROVIDED IN ENGLISH AND FRENCH ARE NOT FOR CANADIAN CUSTOMERS (INCLUDING IN THE PROVINCE OF QUEBEC).

The nameplate indicating operating voltage, etc., is located on the bottom of the chassis.

WARNING

To prevent fire or shock hazard, do not expose the unit to rain or moisture.

To avoid electrical shock, do not open the cabinet. Refer servicing to qualified personnel only.

This equipment has been tested and found to comply with the limits for a Class B digital device, pursuant to Part 15 of the FCC Rules. These limits are designed to provide reasonable protection against harmful interference in a residential installation. This equipment generates, uses, and can radiate radio frequency energy and, if not installed and used in accordance with the instructions, may cause harmful interference to radio communications. However, there is no guarantee that interference will not occur in a particular installation. If this equipment does cause harmful interference to radio or television reception, which can be determined by turning the equipment off and on, the user is encouraged to try to correct the interference by one or more of the following measures:
– Reorient or relocate the receiving antenna.
– Increase the separation between the equipment and receiver.
– Connect the equipment into an outlet on a circuit different from that to which the receiver is connected.
– Consult the dealer or an experienced radio/TV technician for help.

You are cautioned that any changes or modifications not expressly approved in this manual could void your authority to operate this equipment.

This device complies with part 15 of FCC Rules and Innovation, Science and Economic Development Canada's licence-exempt RSS(s). Operation is subject to the following two conditions:
(1) This device may not cause harmful interference, and (2) this device must accept any interference received, including interference that may cause undesired operation.

This transmitter must not be co-located or operated in conjunction with any other antenna or transmitter.

This equipment complies with FCC/ISED radiation exposure limits set forth for an uncontrolled environment and meets the FCC radio frequency (RF) Exposure Guidelines and RSS-102 of the ISED radio frequency (RF) Exposure rules as this equipment has very low levels of RF energy.

If you have any questions about this product:
Visit: https://www.sony.com/electronics/support
Contact: Sony Customer Information Service Center at 1-800-222-7669
Supplier's Declaration of Conformity
Trade Name: SONY
Model: XAV-3600
Responsible Party: Sony Electronics Inc.
Address: 16535 Via Esprillo, San Diego, CA 92127 U.S.A.
Telephone Number: 858-942-2230
This device complies with part 15 of the FCC rules. Operation is subject to the following two conditions:
(1) This device may not cause harmful interference, and (2) this device must accept any interference received, including interference that may cause undesired operation.

Warning if your car's ignition has no ACC position
Do not install this unit in a car that has no ACC position. The display of the unit does not turn off even after turning the ignition off, and this causes battery drain.

Disclaimer regarding services offered by third parties
Services offered by third parties may be changed, suspended, or terminated without prior notice. Sony does not bear any responsibility in these sorts of situations.

About function update of the unit
For the latest functions, refer to "Help Guide" on the website.
The QR code and URL can be found on the front cover.

Important notice

Caution

IN NO EVENT SHALL SONY BE LIABLE FOR ANY INCIDENTAL, INDIRECT OR CONSEQUENTIAL DAMAGES OR OTHER DAMAGES INCLUDING, WITHOUT LIMITATION, LOSS OF PROFITS, LOSS OF REVENUE, LOSS OF DATA, LOSS OF USE OF THE PRODUCT OR ANY ASSOCIATED EQUIPMENT, DOWNTIME, AND PURCHASER'S TIME RELATED TO OR ARISING OUT OF THE USE OF THIS PRODUCT, ITS HARDWARE AND/OR ITS SOFTWARE.

Dear customer, this product includes a radio transmitter.
Please check your vehicle operation manual or contact the manufacturer of your vehicle or your vehicle dealer, before you install this product into your vehicle.

Emergency calls

This BLUETOOTH car handsfree and the electronic device connected to the handsfree operate using radio signals, cellular, and landline networks as well as user-programmed function, which cannot guarantee connection under all conditions. Therefore do not rely solely upon any electronic device for essential communications (such as medical emergencies).

On BLUETOOTH communication

- Microwaves emitting from a BLUETOOTH device may affect the operation of electronic medical devices. Turn off this unit and other BLUETOOTH devices in the following locations, as it may cause an accident.
  - where inflammable gas is present, in a hospital, train, airplane, or petrol station
  - near automatic doors or a fire alarm
- This unit supports security capabilities that comply with the BLUETOOTH standard to provide a secure connection when the BLUETOOTH wireless technology is used, but security may not be enough depending on the setting. Be careful when communicating using BLUETOOTH wireless technology.
- We do not take any responsibility for the leakage of information during BLUETOOTH communication.

If you have any questions or problems concerning your unit that are not covered in this manual, consult your nearest Sony dealer.

Guide to Parts and Controls

Main Unit

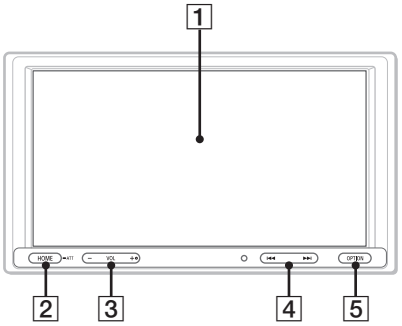

The VOL (volume) + button has a tactile dot.

1 **Display/touch screen**

2 **HOME**
Displays the HOME screen (page 4).

ATT (attenuate)
Press and hold for 1 second to attenuate the sound.
To cancel, press and hold again, or press VOL +.

3 **VOL (volume) +/–**

4 **⏮/⏭ (previous/next)**
Functions differently depending on the selected source:
– [Radio]: select a preset station.
– [USB]/[Bluetooth]: move to the previous/next file.
Press and hold to:
– [Radio]: tune into a station automatically (SEEK+/SEEK–).
– [USB]/[Bluetooth]: fast-reverse/fast-forward.

5 **OPTION**
Displays the OPTION screen (page 4).

Screen Displays

Playback screen:

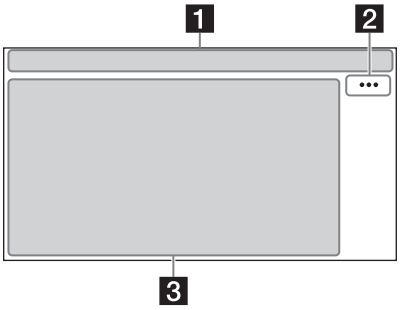

HOME screen:

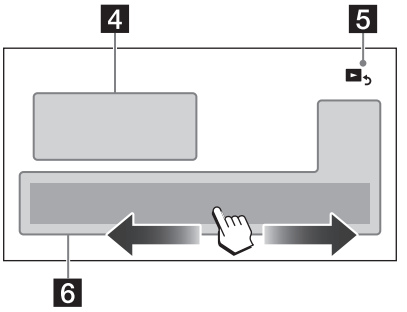

OPTION screen:

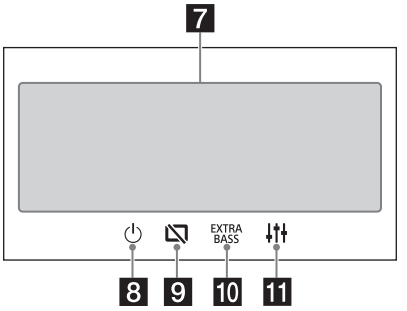

1 Status indication

ATT	Lights up when the sound is attenuated.
	Lights up when the Bluetooth® signal is on. Flashes when the connection is in progress.
	Lights up when the audio device is playable by enabling the A2DP (Advanced Audio Distribution Profile).
	Lights up when handsfree calling is available by enabling the HFP (Handsfree Profile).
	Indicates the signal strength status of the connected mobile phone.
	Indicates the remaining battery status of the connected mobile phone.

2 ••• (source option)
Opens the source option menu. The available items differ depending on the source.

3 Application specific area
Displays playback controls/indications or show the unit's status. Displayed items differ depending on the source.

4 Clock
Displays the time which are set on the Date/Time setting.

5 (return to the playback screen)
Switches from the HOME screen to the playback screen.

6 Sources and Settings select keys
Changes the source or make various settings. Flick to select the setting icon and other icons. Touch the source icon you want to select.

Radio	Bluetooth	Phone
USB	WebLink*	HDMI
Rear Camera	Settings	

* WebLink icon appears when the smartphone is connected.

7 Sound select keys
Changes the sound.

8 (standby)
Turns the unit in standby mode (USB charging is still available). To resume, press any buttons.

9 (monitor off)
Turns off the monitor. When the monitor is turned off, touch any part of the display to turn it back on.

10 EXTRA BASS (EXTRA BASS)
Changes the EXTRA BASS setting.

11 (EQ10/Subwoofer)
Changes the EQ10/Subwoofer setting.

Pairing with a BLUETOOTH Device

When connecting a BLUETOOTH device for the first time, mutual registration (called “pairing”) is required. Pairing enables this unit and other devices to recognize each other.

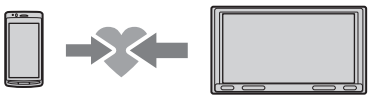

1. **Press HOME, then touch [Settings] → [Bluetooth] → [Bluetooth Connection] → [ON] → [Pairing].**
   flashes while the unit is in pairing standby mode.
2. **Perform pairing on the BLUETOOTH device so it detects this unit.**
3. **Select your model name shown on the display of the BLUETOOTH device*.**
   When pairing is made, stays lit.

   * If passkey input is required on the BLUETOOTH device, input [0000].

Canceling the Demonstration Mode

1. **Press HOME, then touch [Settings].**
2. **Touch [General], then touch [Demo] to set to [OFF].**
3. **To exit the setup menu, touch (back) twice.**

Updating the Firmware

To update the firmware, visit the support site, then follow the online instructions.
URL: https://www.sony.com/am/support

Note
During the update, do not remove the USB device.

Additional Information

Precautions

Note on safety
Comply with your local traffic rules, laws, and regulations.

About iPhone

- **Compatible iPhone models:**
  iPhone 14 Pro Max, iPhone 14 Pro, iPhone 14 Plus, iPhone 14, iPhone SE (3rd generation), iPhone 13 Pro Max, iPhone 13 Pro, iPhone 13, iPhone 13 mini, iPhone 12 Pro Max, iPhone 12 Pro, iPhone 12, iPhone 12 mini, iPhone SE (2nd generation), iPhone 11 Pro Max, iPhone 11 Pro, iPhone 11, iPhone XS Max, iPhone XS, iPhone XR, iPhone X, iPhone 8 Plus, iPhone 8, iPhone 7 Plus, iPhone 7, iPhone SE, iPhone 6s Plus, iPhone 6s, iPhone 6 Plus, iPhone 6, iPhone 5s
- Use of the Made for Apple badge means that an accessory has been designed to connect specifically to the Apple product(s) identified in the badge, and has been certified by the developer to meet Apple performance standards. Apple is not responsible for the operation of this device or its compliance with safety and regulatory standards.
  Please note that the use of this accessory with an Apple product may affect wireless performance.

Notice on license

This product contains software that Sony uses under a licensing agreement with the owner of its copyright. We are obligated to announce the contents of the agreement to customers under requirement by the owner of copyright for the software.
For details on software licenses, select [Settings] → [General] → [Open Source Licenses].

If you have any questions or problems concerning your unit that are not covered in this Operating Instructions, consult your nearest Sony dealer.

Specifications

AUDIO POWER SPECIFICATIONS

CTA2006 Standard
Continuous Power Output:
20 W RMS × 4 Channels at 4 Ω and ≤ 1% THD+N
Signal to Noise:
80 dBA reference 1 Watt RMS

Monitor section

Display type: Wide LCD color monitor
Dimensions: 17.1 cm/ 6.75 in
System: TFT active matrix
Number of pixels:
1 152 000 pixels (800 × 3 (RGB) × 480)
Color system:
PAL/NTSC automatic select for CAMERA IN terminal

Radio section

FM
Tuning range: 87.5 MHz – 107.9 MHz
Usable sensitivity: 7 dBf
Signal-to-noise ratio: 70 dB (mono)
Separation at 1 kHz: 45 dB

AM
Tuning range: 530 kHz – 1 710 kHz
Sensitivity: 32 µV

USB player section

Interface: USB (Hi-speed)
Maximum current: 1.5 A

HDMI section*

Input format: 480p, 576p, 720p

* HDMI output is not available.

Wireless communication

Communication System:
BLUETOOTH Standard version 3.0
Output:
BLUETOOTH Standard Power Class 2 (Max. Conducted +1 dBm)
Maximum communication range*1:
Line of sight approx. 10 m (33 ft)
Frequency band:
2.4 GHz band (2.400 0 GHz – 2.483 5 GHz)
Modulation method: FHSS

Compatible BLUETOOTH Profiles*2:
A2DP (Advanced Audio Distribution Profile) 1.3
AVRCP (Audio Video Remote Control Profile) 1.3
HFP (Handsfree Profile) 1.6
PBAP (Phone Book Access Profile) 1.1
Corresponding codec: SBC, AAC

*1 The actual range will vary depending on factors such as obstacles between devices, magnetic fields around a microwave oven, static electricity, reception sensitivity, antenna (aerial) performance, operating system, software application, etc.
*2 BLUETOOTH standard profiles indicate the purpose of BLUETOOTH communication between devices.

Power amplifier section

Outputs: Speaker outputs
Speaker impedance: 4 Ω – 8 Ω
Maximum power output: 55 W × 4 (at 4 Ω)

General

Power requirements: 12 V DC car battery (negative ground (earth))
Rated current consumption: 10 A
Dimensions:
Approx. 178 mm × 100 mm × 139 mm (7 1/8 in × 4 in × 5 1/2 in) (w/h/d)
Mounting dimensions:
Approx. 182 mm × 111 mm × 120 mm (7 1/4 in × 4 3/8 in × 4 3/4 in) (w/h/d)
Mass: Approx. 1.0 kg (2 lb 4 oz)
Package contents:
Main unit (1)
Parts for installation and connections (1 set)

Ask the dealer for detailed information.

Design and specifications are subject to change without notice.

Copyrights

The Bluetooth® word mark and logos are registered trademarks owned by Bluetooth SIG, Inc. and any use of such marks by Sony Group Corporation and its subsidiaries is under license. Other trademarks and trade names are those of their respective owners.

Windows Media is either a registered trademark or trademark of Microsoft Corporation in the United States and/or other countries.

This product is protected by certain intellectual property rights of Microsoft Corporation. Use or distribution of such technology outside of this product is prohibited without a license from Microsoft or an authorized Microsoft subsidiary.

Apple and iPhone are trademarks of Apple Inc., registered in the U.S. and other countries.

WebLink is a registered trademark of Abalta Technologies, Inc. in the U.S. and a trademark in the other countries.

The terms HDMI, HDMI High-Definition Multimedia Interface, HDMI Trade dress and the HDMI Logos are trademarks or registered trademarks of HDMI Licensing Administrator, Inc.

All other trademarks are trademarks of their respective owners.

Connection/Installation

Cautions

- Do not install this unit in a car that has no ACC position. The display of the unit does not turn off even after turning the ignition off, and this causes battery drain.
- **Run all ground (earth) leads to a common ground (earth) point.**
- Do not get the leads trapped under a screw or caught in moving parts (e.g., seat railing).
- Before making connections, turn the car ignition off to avoid short circuits.
- Connect the **yellow** and **red** power supply leads only after all other leads have been connected.
- Be sure to insulate any loose unconnected leads with electrical tape for safety.
- Choose the installation location carefully so that the unit will not interfere with normal driving operations.
- Avoid installing the unit in areas subject to dust, dirt, excessive vibration, or high temperature, such as in direct sunlight or near heater ducts.
- Use only the supplied mounting hardware for a safe and secure installation.

Note on the power supply lead (yellow)
When connecting this unit in combination with other stereo components, the amperage rating of the car circuit to which the unit is connected must be higher than the sum of each component's fuse amperage rating.

Note on installing in cars with a start-stop system
The unit may restart when starting the engine from start-stop. In this case, turn off the start-stop system of your car.

Note on installing in cars with electric parking brake system
For cars with electric parking brakes, some related functions (such as video blocking function) may not work properly.

Mounting angle adjustment

Adjust the mounting angle to less than 30°.

Parts List for Installation

① **Power supply leads (1)**

② **Mounting screw (5 × max. 9 mm (7/32 × max. 3/8 in)) (4)**

③ **Microphone (1)**

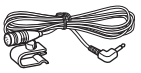

④ **Flat-mount base (1)**

⑤ **Double-sided tape (1)**

⑥ **Cable for steering wheel remote input (RC-SR1) (1)**

⑦ **Cable tie (1)**

This parts list does not include all the package contents.

Connection

- To prevent short circuits, insulate leads with a cover or tape.
- Note that the unit may be damaged if it is connected incorrectly or by short circuits at the leads.

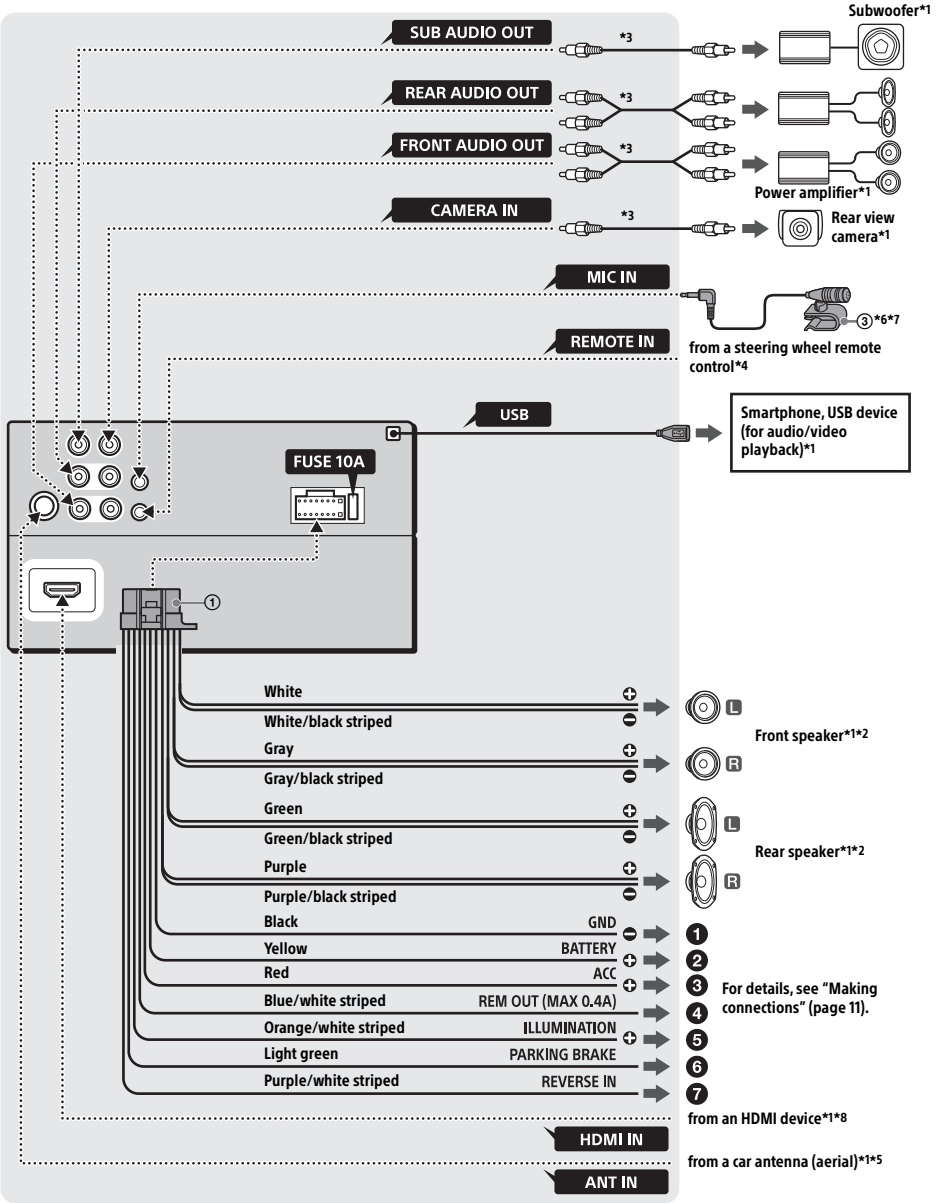

*1 Not supplied
*2 Speaker impedance: 4 Ω to 8 Ω × 4
*3 RCA pin cord (not supplied)
*4 Depending on the type of car, use an adaptor for the steering wheel remote control (not supplied).
For details on using the steering wheel remote control, see "Using the steering wheel remote control" (page 12).
*5 Depending on the type of car, use an adaptor (not supplied) if the antenna (aerial) connector does not fit.
*6 Whether in use or not, route the microphone input cord so it does not interfere with driving operations. Secure the cord with a clamp, etc., if it is installed around your feet.
*7 For details on installing the microphone, see "Installing the microphone" (page 12).
*8 For details on using an HDMI device, see "Using an HDMI device" (page 13).

Making connections

❶ **To a common ground (earth) point**
First connect the black ground (earth) lead then connect the yellow and red power supply leads.

❷ **To the +12 V power terminal which is energized at all times**
Be sure to first connect the black ground (earth) lead to a common ground (earth) point.

❸ **To the +12 V power terminal which is energized when the ignition switch is set to the accessory position**
Be sure to first connect the black ground (earth) lead to a common ground (earth) point.

❹ **To the power antenna (aerial) control lead or the power supply lead of the antenna (aerial) booster**
It is not necessary to connect this lead if there is no power antenna (aerial) or antenna (aerial) booster, or with a manually-operated telescopic antenna (aerial).
To AMP REMOTE IN of an optional power amplifier
This connection is only for amplifiers and a power antenna (aerial). Connecting any other system may damage the unit.

Note
It will take about 10 seconds to shut down the output of REM OUT after the unit is turned off.

❺ **To a car's illumination signal**
Be sure to first connect the black ground (earth) lead to a common ground (earth) point.

❻ **To the parking brake switch lead**
The mounting position of the parking brake switch lead depends on your car.
Be sure to connect the parking brake lead (light green) of the power supply leads ① to the parking brake switch lead.

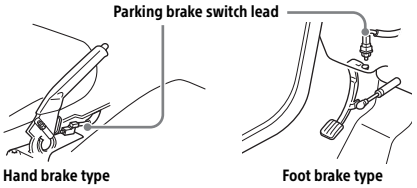

❼ **To the +12 V power terminal of the car's rear lamp lead (only when connecting the rear view camera)**

Rear View Camera Connection

Installation of a rear view camera (not supplied) is required before use.

Memory hold connection

When the yellow power supply lead is connected, power will always be supplied to the memory circuit even when the ignition switch is turned off.

Speaker connection

- Before connecting the speakers, turn the unit off.
- Use speakers with an impedance of 4 Ω to 8 Ω and with adequate power handling capacities to avoid damage.

Installing the microphone

To capture your voice during handsfree calling, you need to install the microphone ③.

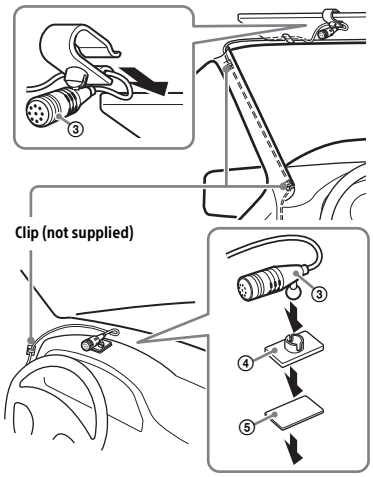

Cautions

- It is extremely dangerous if the cord becomes wound around the steering column or gearstick. Be sure to keep it and other parts from interfering with your driving operations.
- If airbags or any other shock-absorbing equipment are in your car, contact the store where you purchased this unit or the car dealer before installation.

Notes

- When mounting on the dashboard, remove the visor clip carefully from the microphone ③, then attach the flat-mount base ④ to the microphone ③.
- Before attaching the double-sided tape ⑤, clean the surface of the dashboard with a dry cloth.

Using the steering wheel remote control

When using the steering wheel remote control

Installation of the connection cable RC-SR1 ⑥ is required before use.

1 **To enable the steering wheel remote control, select [General] → [Steering Control] → [Custom] → 🔧 to make the registration.**
When the registration is complete, the steering wheel remote control becomes available.

Notes on installing the connection cable RC-SR1 ⑥

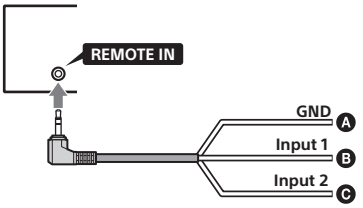

Ⓐ Black
Ⓑ Green
Ⓒ Brown

- Before installing, turn on the car ignition then check that the steering wheel control buttons are working correctly.
- Refer to the support site for details then connect each lead properly to the appropriate leads. Making an improper connection may damage the unit.
  URL: https://www.sony.com/am/support
- Consulting the dealer or an experienced technician for help is recommended.

When using an adaptor for the steering wheel remote control

Depending on the type of car, use an adaptor for the steering wheel remote control (not supplied).

1 **Set [Steering Control] in [General] to [Preset].**
The adaptor for the steering wheel remote control is enabled.

Using an HDMI device

Installation of an HDMI cable (not supplied) is required before use.

1 Connect an HDMI cable to the HDMI terminal at the back panel of the unit.

2 Pass the cable tie ⑦ through the cable holder, then tie the cable tie ⑦ around the HDMI cable.

The HDMI cable is secured to the unit.

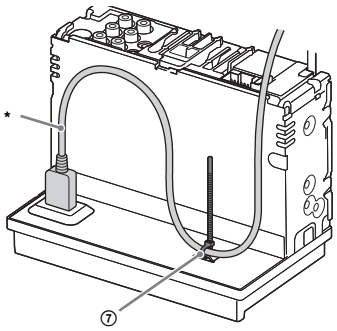

* HDMI cable (not supplied)

3 Connect the installed HDMI cable to an HDMI device.

4 Press HOME, then touch [HDMI].

The HDMI device connected will be mirrored to this unit.

Installation

Mounting the unit in a Japanese car

You may not be able to install this unit in some Japanese cars. In such a case, consult your Sony dealer.

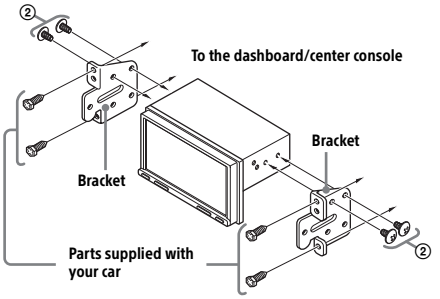

When mounting this unit to the preinstalled brackets of your car, use the mounting screws ② in the appropriate screw holes based on your car: T for TOYOTA and N for NISSAN.

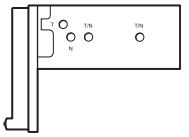

Note

To prevent a malfunction, install only with the mounting screws ②.

Fuse replacement

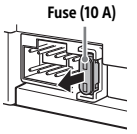

When replacing the fuse, be sure to use one matching the amperage rating stated on the original fuse. If the fuse blows, check the power connection and replace the fuse. If the fuse blows again after replacement, there may be an internal malfunction. In such a case, consult your nearest Sony dealer.

If you have any questions/problems regarding this product, try the following:

1. **Read Troubleshooting in Help Guide (online manual).**
2. **Please contact (U.S.A. only);**
   Call **1-800-222-7669**
   URL **https://www.SONY.com**

Made for iPhone

Conçu pour iPhone

HDMI™ HIGH-DEFINITION MULTIMEDIA INTERFACE

Bluetooth®

©2024 Sony Corporation Printed in Thailand

https://www.sony.net/