SONY

4-573-332-**11**(1)

AV Center

Operating Instructions GB

Manual de instrucciones ES

To cancel the demonstration (Demo) display, see page 19.
For the connection/installation, see page 28.

Para cancelar la pantalla de demostración (Demostración), consulte la página 19.
Para la conexión/instalación, consulte la página 29.

* 4 5 7 3 3 3 2 1 1 * (1)

XAV-V750BT

For safety, be sure to install this unit in the dashboard of the car as the rear side of the unit becomes hot during use.
For details, see "Connection/Installation" (page 28).

The nameplate indicating operating voltage, etc., is located on the bottom of the chassis.

Warning

To prevent fire or shock hazard, do not expose the unit to rain or moisture.

To avoid electrical shock, do not open the cabinet. Refer servicing to qualified personnel only.

Complies with IDA Standards DB00353

(For Singapore models only)

Disposal of waste batteries and electrical and electronic equipment (applicable in the European Union and other European countries with separate collection systems)

Note on the lithium battery
Do not expose the battery to excessive heat such as direct sunlight, fire or the like.

Warning if your car's ignition has no ACC position
After turning the ignition off, be sure to press and hold HOME on the unit until the display disappears.
Otherwise, the display does not turn off and this causes battery drain.

Disclaimer regarding services offered by third parties
Services offered by third parties may be changed, suspended, or terminated without prior notice. Sony does not bear any responsibility in these sorts of situations.

FOR THE CUSTOMERS IN THE USA. NOT APPLICABLE IN CANADA, INCLUDING IN THE PROVINCE OF QUEBEC.

POUR LES CLIENTS AUX ÉTATS-UNIS. NON APPLICABLE AU CANADA, Y COMPRIS LA PROVINCE DE QUÉBEC.
This equipment has been tested and found to comply with the limits for a Class B digital device, pursuant to Part 15 of the FCC Rules. These limits are designed to provide reasonable protection against harmful interference in a residential installation. This equipment generates, uses, and can radiate radio frequency energy and, if not installed and used in accordance with the instructions, may cause harmful interference to radio communications. However, there is no guarantee that interference will not occur in a particular installation. If this equipment does cause harmful interference to radio or television reception, which can be determined by turning the equipment off and on, the user is encouraged to try to correct the interference by one or more of the following measures:
– Reorient or relocate the receiving antenna.
– Increase the separation between the equipment and receiver.
– Connect the equipment into an outlet on a circuit different from that to which the receiver is connected.
– Consult the dealer or an experienced radio/TV technician for help.

You are cautioned that any changes or modifications not expressly approved in this manual could void your authority to operate this equipment.

This device complies with Part 15 of the FCC Rules and Industry Canada's licence-exempt RSSs. Operation is subject to the following two conditions:
(1) This device may not cause interference; and
(2) This device must accept any interference, including Interference that may cause undesired operation of the device.

This transmitter must not be co-located or operated in conjunction with any other antenna or transmitter.

This equipment complies with FCC/IC radiation exposure limits set forth for an uncontrolled environment and meets the FCC radio frequency (RF) Exposure Guidelines and RSS-102 of the IC radio frequency (RF) Exposure rules. This equipment has very low levels of RF energy that is deemed to comply without maximum permissive exposure evaluation (MPE). But it is desirable that it should be installed and operated keeping the radiator at least 20 cm or more away from person's body.

Important notice

Caution

IN NO EVENT SHALL SONY BE LIABLE FOR ANY INCIDENTAL, INDIRECT OR CONSEQUENTIAL DAMAGES OR OTHER DAMAGES INCLUDING, WITHOUT LIMITATION, LOSS OF PROFITS, LOSS OF REVENUE, LOSS OF DATA, LOSS OF USE OF THE PRODUCT OR ANY ASSOCIATED EQUIPMENT, DOWNTIME, AND PURCHASER'S TIME RELATED TO OR ARISING OUT OF THE USE OF THIS PRODUCT, ITS HARDWARE AND/OR ITS SOFTWARE.

Dear customer, this product includes a radio transmitter.
Please check your vehicle operation manual or contact the manufacturer of your vehicle or your vehicle dealer, before you install this product into your vehicle.

Emergency calls

This BLUETOOTH car handsfree and the electronic device connected to the handsfree operate using radio signals, cellular, and landline networks as well as user-programmed function, which cannot guarantee connection under all conditions. Therefore do not rely solely upon any electronic device for essential communications (such as medical emergencies).

On BLUETOOTH communication

- Microwaves emitting from a BLUETOOTH device may affect the operation of electronic medical devices. Turn off this unit and other BLUETOOTH devices in the following locations, as it may cause an accident.
  - where inflammable gas is present, in a hospital, train, airplane, or petrol station
  - near automatic doors or a fire alarm
- This unit supports security capabilities that comply with the BLUETOOTH standard to provide a secure connection when the BLUETOOTH wireless technology is used, but security may not be enough depending on the setting. Be careful when communicating using BLUETOOTH wireless technology.
- We do not take any responsibility for the leakage of information during BLUETOOTH communication.

If you have any questions or problems concerning your unit that are not covered in this manual, consult your nearest Sony dealer.

Table of Contents

Warning 2
Guide to Parts and Controls 5

Getting Started

Resetting the Unit 7
Performing Initial Settings 7
Setting the Clock 7
Preparing a BLUETOOTH Device. 8
Connecting a USB Device 9
Connecting Other Portable Audio/
Video Devices 9
Connecting Rear View Camera 9

Listening to the Radio

Listening to the Radio. 10
Using Radio Data System (RDS) 11

Playback

Playing a USB Device 11
Playing a BLUETOOTH Device. 12
Searching and Playing Tracks. 12
Other Settings During Playback. 13

Handsfree Calling (via BLUETOOTH only)

Receiving a Call 13
Making a Call 13
Available Operations During a Call 14

Useful Functions

SongPal with Android Smartphone 15
Using Siri Eyes Free 16

Settings

Basic Setting Operation 17
General Settings 17
Sound Settings 18
Screen Settings 19
Visual Settings 19

Additional Information

Precautions 19
Maintenance 22
Specifications 22
Troubleshooting 24

Connection/Installation

Cautions 28
Parts List for Installation 28
Connection 29
Installation 32

Guide to Parts and Controls

Main unit

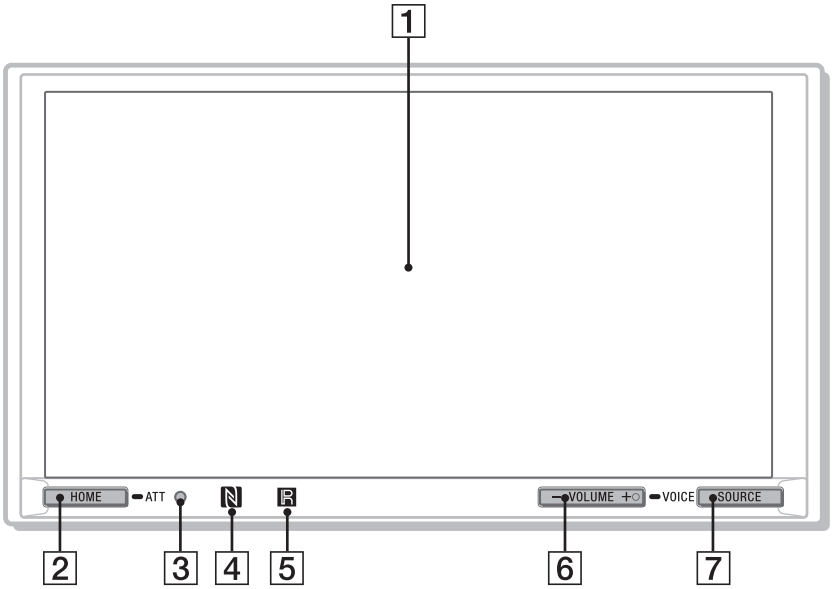

The VOLUME + button has a tactile dot.

1 **Display/touch panel**

2 **HOME**
Turn on the power.
Open the HOME menu.
Press to pause playback when the iPod/USB source is selected.
To resume playback, touch ▶.
Press and hold for more than 2 seconds to turn off the unit. When the unit is turned off, remote commander operation is not available.

ATT (attenuate)
Press and hold for 1 second (less than 2 seconds) to attenuate the sound.
To cancel, press and hold again, or press VOLUME +.

3 **Reset button**

4 **N-Mark**
Make Bluetooth® connection when touched with Android™ smartphone.

5 **Receptor for the remote commander**

6 **VOLUME +/–**

7 **SOURCE**
Change the source.
To turn the source off, press repeatedly to select [OFF].

VOICE
Press and hold to activate the voice command function.
To assign the DSPL function to this button, select [DSPL] in [SOURCE Key Func.] (page 18).

DSPL (display)
Press and hold to open the display menu.
The monitor off function can be set on the display menu.
When the monitor off function is activated and the monitor is turned off, touch anywhere on the display to turn it back on.

RM-X170 remote commander

The remote commander can be used to operate the audio controls. For menu operations, use the touch panel.

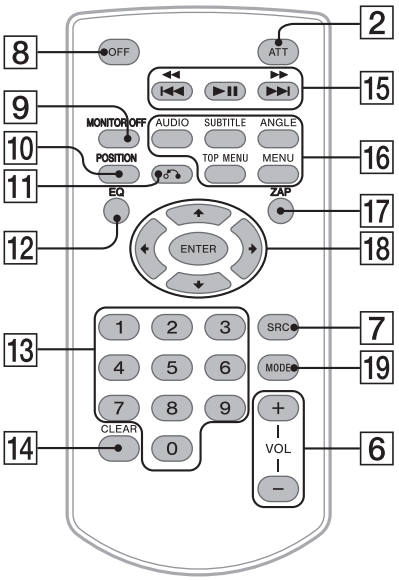

8 **OFF**
Turn the source off.
Press and hold for 2 seconds to turn off the power and display.

9 **MONITOR OFF**
Turn off the monitor and button illumination.
To turn back on, press again.

10 **POSITION**
This button is not supported.

11 **(return)**
Return to the previous display.

12 **EQ (equalizer)**
Select an equalizer curve.

13 **Number buttons (0 – 9)**

14 **CLEAR**

15 **▶II (play/pause)**
I◀◀/▶▶I (previous/next)
◀◀/▶▶ (fast-reverse/fast-forward)

16 **DVD playback setting buttons**
These buttons are not supported.

17 **ZAP (ZAPPIN™) (page 10)**

18 **←/↑/↓/→**
Select a setup item, etc.
ENTER
Enter the selected item.

19 **MODE**
Select the radio band.

Remove the insulation film before use.

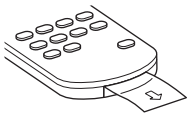

Screen displays

Playback screen:

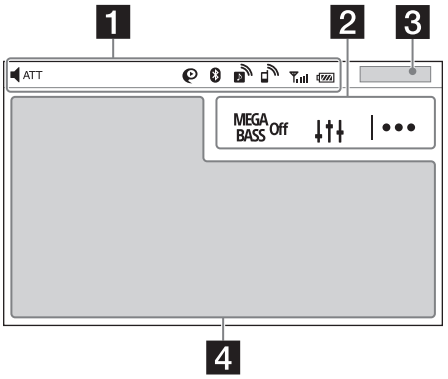

Home screen:

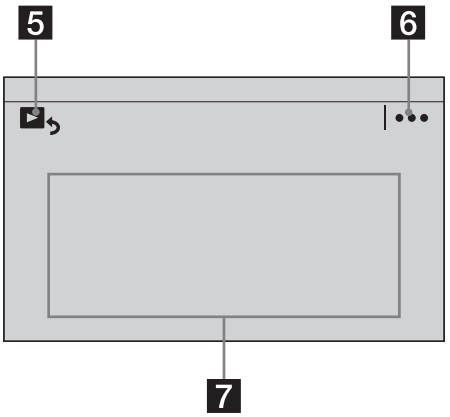

1 Status indication

ATT	Lights up when the sound is attenuated.
	Lights up when the "SongPal" connection is established between this unit and your Android smartphone.
	Lights up when the BLUETOOTH signal is on. Flashes when the connection is in progress.
	Lights up when the audio device is playable by enabling the A2DP (Advanced Audio Distribution Profile).
	Lights up when handsfree calling is available by enabling the HFP (Handsfree Profile).
	Indicates the signal strength status of the connected cellular phone.
	Indicates the remaining battery status of the connected cellular phone.

2 MEGA BASS Off (Mega Bass)
Touch to select the Mega Bass setting: [1], [2], [Off].
(sound setting menu)
Access the sound setting menu directly (page 18).
(option)
Open the option menu. The available items differ depending on the source.

3 Clock (page 7)
When the AUX or Rear Camera source is selected, the clock is not displayed.

4 Application specific area
Display playback controls/indications or show the unit's status. Displayed items differ depending on the source.

5 (return to the playback screen)
Switch from the HOME screen to the playback screen.

6 (option)
Open the option menu. The available items differ depending on the source.

7 Sources and Settings select keys
Change the source or make various settings.

Getting Started

Resetting the Unit

You must reset the unit before operating the unit for the first time, after replacing the car battery, or changing connections.

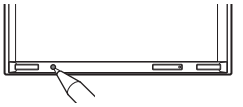

Note
Pressing the reset button will erase the clock setting and some stored contents.

Performing Initial Settings

After resetting, the initial setting display appears.

1 Touch [Language], then set the display language.

2 Touch [Output Color System], then set the color system.

3 Touch [Tuner Step], then set the FM/AM tuning step.

4 After setting the FM/AM tuning step, touch [OK].
The startup caution appears.

5 Touch [OK].
The setting is complete.

This setting can be further configured in the setting menu (page 17).

Setting the Clock

1 Press HOME, then touch [Settings].

2 Touch , then touch [Clock Adjust].
The setting display appears.

3 Touch ▲/▼ to set the hour and minute.

4 After setting the hour and minute, touch [Set].
The setting is complete and the clock starts.

Preparing a BLUETOOTH Device

You can enjoy music or perform handsfree calling depending on the BLUETOOTH compatible device such as smartphones, cellular phones, and audio devices (hereafter "BLUETOOTH device" if not otherwise specified). For details on connecting, refer to the operating instructions supplied with the device.
Before connecting the device, turn down the volume of this unit; otherwise, a loud sound may result.

Connecting with a smartphone by One touch (NFC)

By touching the N-Mark on the unit with an NFC* compatible smartphone, the unit is paired and connected with the smartphone automatically.

* NFC (Near Field Communication) is a technology enabling short-range wireless communication between various devices, such as mobile phones and IC tags. Thanks to the NFC function, data communication can be achieved easily just by touching the relevant symbol or designated location on NFC compatible devices.

For a smartphone with Android OS 4.0 or lower installed, downloading of the app "NFC Easy Connect" available at Google Play™ is required. The app may not be downloadable in some countries/regions.

1 **Activate the NFC function on the smartphone.**
For details, refer to the operating instructions supplied with the smartphone.

2 **Touch the N-Mark part of the unit with the N-Mark part of the smartphone.**

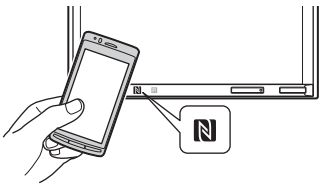

Make sure that ᛒ lights up on the status bar of the unit.

To disconnect by One touch

Touch the N-Mark part of the unit with the N-Mark part of the smartphone again.

Notes
- When making the connection, handle the smartphone carefully to prevent scratches.
- One touch connection is not possible when the unit is already connected to another NFC compatible device. In this case, disconnect the other device, and make a connection with the smartphone again.

Pairing and connecting with a BLUETOOTH device

When connecting a BLUETOOTH device for the first time, mutual registration (called "pairing") is required. Pairing enables this unit and other devices to recognize each other.

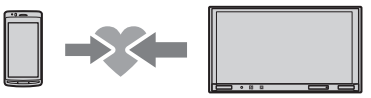

1 **Place the BLUETOOTH device within 1 m (3 ft) of this unit.**

2 **Press HOME, then touch [Settings].**

3 **Touch ⊟.**

4 **Touch [Bluetooth Connection], then set the signal to [ON].**
The BLUETOOTH signal is turned on and ᛒ lights up on the status bar of the unit.

5 **Touch [Pairing].**
ᛒ flashes while the unit is in pairing standby mode.

6 **Perform pairing on the BLUETOOTH device so it detects this unit.**

7 **Select [XAV-V750BT] shown in the display of the BLUETOOTH device.**
If your model name does not appear, repeat from step 5.

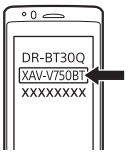

8 **If passkey* input is required on the BLUETOOTH device, input [0000].**

* Passkey may be called "passcode," "PIN code," "PIN number," "password," etc., depending on the BLUETOOTH device.

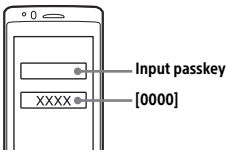

When pairing is made, ᛒ stays lit.

9 Select this unit on the BLUETOOTH device to establish the BLUETOOTH connection.
or lights up when the connection is made.

Note
While connecting to a BLUETOOTH device, this unit cannot be detected by another device. To enable detection, enter the pairing mode and search for this unit from another device.

To start playback
For details, see "Playing a BLUETOOTH Device" (page 12).

To cancel pairing
Perform step 5 to cancel the pairing mode after this unit and the BLUETOOTH devices are paired.

Connecting with a paired BLUETOOTH device

To use a paired device, connection with this unit is required. Some paired devices will connect automatically.

1 Press HOME, then touch [Settings].

2 Touch [Bluetooth Connection], then touch [ON].
Make sure that lights up on the status bar of the unit.

3 Activate the BLUETOOTH function on the BLUETOOTH device.

4 Operate the BLUETOOTH device to connect to this unit.
or lights up on the status bar.

To connect the last-connected device from this unit
When the ignition is turned to on with the BLUETOOTH signal activated, this unit searches for the last-connected BLUETOOTH device, and connection is made automatically.
If it does not work, touch [Reconnect] to search for the last-paired device again. If the problem is not solved, follow the pairing procedure.

Note
While streaming BLUETOOTH audio, you cannot connect from this unit to the cellular phone. Connect from the cellular phone to this unit instead.

To install the microphone
For details, see "Installing the microphone" (page 31).

Connecting a USB Device

1 Turn down the volume on the unit.

2 Connect the USB device to the unit.
To connect an iPod/iPhone, use the USB connection cable for iPod (not supplied).

Connecting Other Portable Audio/Video Devices

1 Turn off the portable audio/video device.

2 Turn down the volume on the unit.

3 Connect the portable audio/video device to the AUX input jack on the unit with a connecting cord (not supplied).

4 Press HOME, then touch [AUX].

To match the volume level of the connected device to other sources
Start playback of the portable audio/video device at a moderate volume and set your usual listening volume on the unit:
Touch I•••, then set [Input Level] between –10 and +15.

To set to the device type manually
Touch I•••, then set [AUX Input] to [Audio], [Video], or [Auto].

Connecting Rear View Camera

By connecting the optional rear view camera to the CAMERA IN terminal, you can display the picture from the rear view camera. For details, see "Connection/Installation" (page 28).

Listening to the Radio

To listen to the radio, press HOME then touch [Tuner].

Reception controls/indications

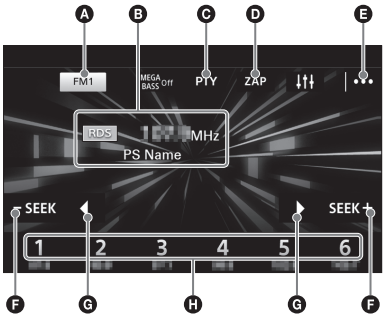

A Current band
Opens the band list.

B Current frequency, program service name*, RDS indication*

* During RDS reception.

C PTY (program types) (FM only)
Opens the PTY list (page 11).

D ZAP (ZAPPIN)
Helps to find a desired station by listening to preset stations for a few seconds.

E |••• (option)
Opens the option menu.

F –SEEK/SEEK+
Tunes in automatically.

G ◄/►
Tunes in manually.
Touch and hold to continuously skip frequencies.

H Preset numbers (1 to 6)
Selects a preset station.
Touch and hold to store the current frequency in that preset.

Storing automatically (BTM)

1 Select the desired band (FM1, FM2, FM3, AM1, or AM2).

2 Touch |•••.

3 Touch [BTM], then [Search].
The unit stores stations in order of frequency on the preset numbers (1 to 6).

Tuning

1 Touch the current band.
The band list appears.

2 Touch the desired band (FM1, FM2, FM3, AM1, or AM2).

3 Perform tuning.

To tune automatically
Touch –SEEK/SEEK+.
Scanning stops when the unit receives a station.

To tune manually
Touch and hold ◄/► to locate the approximate frequency, then touch ◄/► repeatedly to fine adjust to the desired frequency.

Storing manually

1 While receiving the station that you want to store, press and hold the desired preset number (1 to 6).

Receiving stored stations

1 Select the band, then touch the desired preset number (1 to 6).

Searching for the desired station from preset stations (Tuner Preset ZAPPIN)

Tuner Preset ZAPPIN helps you to find a desired station by listening to preset stations for a few seconds.

1 During radio reception, touch [ZAP].
Tuner Preset ZAPPIN starts, and subsequent stations are received in sequence.

2 Touch [ZAP] again when the desired station is received.

Using Radio Data System (RDS)

Selecting program types (PTY)

1 **During FM reception, touch [PTY].**
To scroll the list, touch ▲/▼.

2 **Touch the desired program type.**
The unit searches for a station broadcasting the selected program type.

To close the PTY list
Touch ⮌.

Type of programs

News (News), **Current Affairs** (Current Affairs), **Information** (Information), **Sport** (Sports), **Education** (Education), **Drama** (Drama), **Cultures** (Culture), **Science** (Science), **Varied Speech** (Varied), **Pop Music** (Pop Music), **Rock Music** (Rock Music), **Easy Listening** (M.O.R. Music), **Light Classics M** (Light classical), **Serious Classics** (Serious classical), **Other Music** (Other Music), **Weather & Metr** (Weather), **Finance** (Finance), **Children's Progs** (Children's program), **Social Affairs** (Social Affairs), **Religion** (Religion), **Phone In** (Phone In), **Travel & Touring** (Travel), **Leisure & Hobby** (Leisure), **Jazz Music** (Jazz Music), **Country Music** (Country Music), **National Music** (National Music), **Oldies Music** (Oldies Music), **Folk Music** (Folk Music), **Documentary** (Documentary)

Setting clock time (CT)

The CT data from the RDS transmission sets the clock.

1 **Set [Clock Time] to [ON] in [General Settings] (page 17).**

Playback

Playing a USB Device

In these Operating Instructions, "iPod" is used as a general reference for the iPod functions on the iPod and iPhone, unless otherwise specified by the text or illustrations.

For details on the compatibility of your iPod, see "About iPod" (page 21) or visit the support site on the back cover.

MSC (Mass Storage Class) and MTP (Media Transfer Protocol) type USB devices (such as a USB flash drive, digital media player, Android smartphone) compliant with the USB standard can be used. Depending on the digital media player or Android smartphone, setting the USB connection mode to MTP is required.

Notes
- For details on the compatibility of your USB device, visit the support site on the back cover.
- Playback of the following files is not supported.
  MP3/WMA/AAC/FLAC:
  – copyright-protected files
  – DRM (Digital Rights Management) files
  – Multi-channel audio files
  MP3/WMA/AAC:
  – lossless compression files
  WAV:
  – Multi-channel audio files

1 **Connect the USB device to the USB port.**
Playback starts.
If a device is already connected, press HOME then touch [iPod/USB] to start playback.

2 **Adjust the volume on this unit.**

To stop playback
Press OFF, or press SOURCE repeatedly until [OFF] appears.

To remove the device
Stop playback, then remove the device.

Caution for iPhone
When you connect an iPhone via USB, the phone call volume is controlled by the iPhone, not the unit. Do not inadvertently increase the volume on the unit during a call, as a sudden loud sound may result when the call ends.

Playing a BLUETOOTH Device

You can play contents on a connected device that supports BLUETOOTH A2DP (Advanced Audio Distribution Profile).

1 **Make a BLUETOOTH connection with the audio device (page 9).**

2 **Press HOME, then touch [BT Audio].**

3 **Operate the audio device to start playback.**

4 **Adjust the volume on this unit.**

Notes
- Depending on the audio device, information such as title, track number/time, and playback status may not be displayed on this unit.
- Even if the source is changed on this unit, playback of the audio device does not stop.

To match the volume level of the BLUETOOTH device to other sources
You can reduce the volume level differences between this unit and the BLUETOOTH device: During playback, touch |•••, then set [Input Level] between –10 and +15.

Searching and Playing Tracks

Repeat play and shuffle play

1 **During playback, touch ⊂ (repeat) or ⊃ (shuffle) repeatedly until the desired play mode appears.**
Playback in the selected play mode may take time to start.

Available play modes differ depending on the selected sound source.

Direct search play

1 **During USB playback, press the number buttons on the remote commander to enter an item (e.g., track) number, then press ENTER on the remote commander.**
Playback starts from the beginning of the selected point.

Searching for a file from the list screen

1 **During USB playback, touch ⮌.**
The list screen from the currently played item appears.

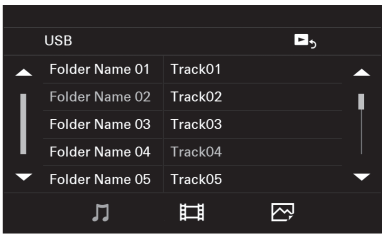

Furthermore, touch ♫ (audio), 🎞 (video), or 🖼 (photo) to list up by file type.

2 **Touch the desired item.**
Playback starts.

Other Settings During Playback

Further settings are available in each source by touching |•••. The available items differ depending on the source.

Rotate
Turns the photo to the left or right: (left), (right).
(Available only when the photo file is played.)

Picture EQ
Adjusts the picture quality to suit the interior brightness of the car: [Dynamic], [Standard], [Theater], [Sepia].
(Available only when the parking brake is applied, and iPod/USB or AUX source is selected).

Aspect
Selects an aspect ratio for the screen of the unit. (Available only when the parking brake is applied, and iPod/USB or AUX source is selected).
Normal
Displays a picture in the 4:3 aspect ratio (regular picture).
Wide
Displays a picture in the 4:3 aspect ratio enlarged to the left and right edges of the screen with overflowing parts of the top and bottom cut off to fill the screen.
Full
Displays a picture in the 16:9 aspect ratio.
Zoom
Displays a picture in the 4:3 aspect ratio enlarged to the left and right edges of the screen.

Handsfree Calling (via BLUETOOTH only)

To use a cellular phone, connect it with this unit. For details, see "Preparing a BLUETOOTH Device" (page 8).

Receiving a Call

1 **Touch when a call is received.**
The phone call starts.

Note
The ringtone and talker's voice are output only from the front speakers.

To reject/end a call
Touch .

Making a Call

1 **Press HOME, then touch [Phone].**

2 **Touch one of the call icons on the BLUETOOTH phone display.**

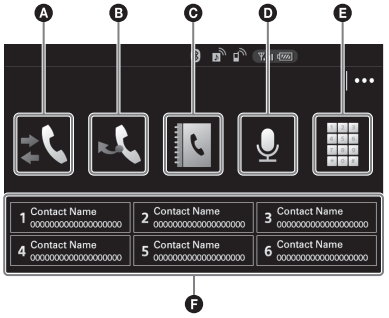

A **(call history)*1**
Select a contact from the call history list. The unit stores the last 20 calls.

B **(redial)**
Make a call automatically to the last contact you made.

C **(phonebook)*1**
Select a contact from the name list/number list in the phonebook. To search the desired contact in alphabetical order from the name list, touch .

D **(voice command)*2*3**
Say a voice tag stored on the cellular phone.

E **(phone number input)**
Enter the phone number.

F **Preset numbers (1 to 6)**
Select the stored contact.
To store the contact, see "Presetting phone numbers" (page 14).

*1 The cellular phone needs to support PBAP (Phone Book Access Profile).
*2 Do not use the voice command function on the cellular phone while it is connected to this unit.
*3 Voice command may not work depending on the recognition specification of the cellular phone. For details, visit the support site on the back cover.

3 Touch .
The phone call starts.

Presetting phone numbers

You can store up to 6 contacts in the preset list.

1 **In the phone screen, select a phone number that you want to store in the preset dial from the phonebook.**
The confirmation display appears.

2 **Touch [Preset], then the desired preset number (1 to 6).**
The contact is stored to the selected preset number.

Available Operations During a Call

To adjust the ringtone volume
Press VOLUME+/– while receiving a call.

To adjust the talker's voice volume
Press VOLUME+/– during a call.

To adjust the volume for the other party (Mic gain adjustment)
During a handsfree call, touch I•••, then set [MIC Gain] to [Low], [Middle] or [High].

To switch between handsfree mode and handheld mode
During a call, touch to switch the phone call audio between the unit and cellular phone.

Note
Depending on the cellular phone, this operation may not be available.

To answer an incoming call automatically
Touch I•••, then set [Auto Answer] to [ON].

Useful Functions

SongPal with Android Smartphone

Downloading the "SongPal" application (version 3.0 or later) is required from Google Play.

Notes

- For your safety, follow your local traffic laws and regulations, and do not operate the application while driving.
- Connecting an Android smartphone while "SongPal" is installed to this unit allows you to receive notifications of your SMS or calendar, etc. through the car speakers and control the unit by voice command.
- What you can control with "SongPal" varies depending on the connected device.
- To make use of "SongPal" features, see the details on your Android smartphone.
- Display images of the "SongPal" application used in this Operating Instruction may differ with the actual ones.
- Messages of the "SongPal" application that appear on this unit and your Android smartphone may differ.
- For further details on "SongPal," visit the following URL: http://rd1.sony.net/help/speaker/songpal/

Establishing the SongPal connection

1 Make the BLUETOOTH connection with Android smartphone (page 9).

2 Launch the "SongPal" application.

3 Press HOME, then touch [Settings].

4 Touch ⊞, then set [SongPal] to [Connect].
Connection to Android smartphone starts.
For details on the operations on an Android smartphone, see the help section of the application.

If the device number appears
Make sure that the number is displayed (e.g., 123456), then select "Yes" on the Android smartphone.

To terminate connection
Set [SongPal] to [Disconnect] in [General Settings].

Selecting the source or application

You can select a source or application not only on your Android smartphone but also on this unit by operating the Android smartphone.

1 **Show the source list of this unit on your Android smartphone.**
For details, refer to the operating instructions supplied with the Android smartphone.

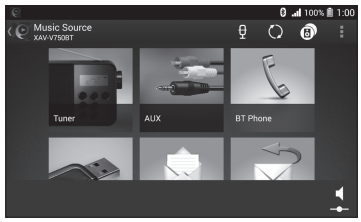

2 **Touch the desired source.**

Announcement of various information by voice guide

When SMS, Twitter/Facebook/Calendar notifications, etc., are received, they are automatically announced through the car speakers.

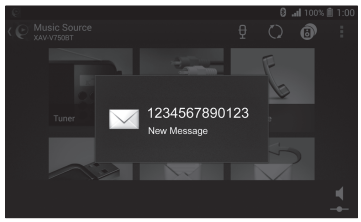

For details on settings, refer to the help section of the application.

Activating voice recognition

By registering applications, you can control an application by voice command. For details, refer to the help section of the application.

To activate voice recognition

1 **Press and hold VOICE to activate voice recognition.**

2 **Say the desired voice command into the microphone when [Say Source or App] appears on the Android smartphone.**

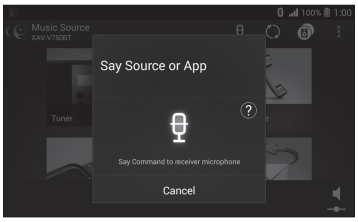

Notes

- To use this function, assign the VOICE (voice command) function to this button by selecting [Voice] in [SOURCE Key Func.] (page 18).
- Voice recognition may not be available in some cases.
- Voice recognition may not work properly depending on the performance of the connected Android smartphone.
- Operate under conditions where noise such as engine sound is minimized during voice recognition.

Replying a message of SMS

You can reply a message by voice recognition.

1 **Activate voice recognition, then input "Reply (Reply)".**
The message input display appears on the "SongPal" application.

2 **Input a reply message by voice recognition.**
The list of message candidates appears on the "SongPal" application.

3 **Touch ▲/▼ to select the desired message, then touch [Enter].**
The message is sent out.

Using Siri Eyes Free

Siri Eyes Free allows you to use an iPhone handsfree by simply speaking into the microphone. This function requires you to connect an iPhone to the unit via BLUETOOTH. Availability is limited to iPhone 4s or later. Make sure that your iPhone is running the latest iOS version.
You must complete BLUETOOTH registration and connection configurations for the iPhone with the unit in advance. For details, see "Preparing a BLUETOOTH Device" (page 8).

1 **Activate the Siri function on the iPhone.**
For details, refer to the operating instructions supplied with the iPhone.

2 **Press and hold SOURCE.**
The voice command display appears.

3 **After the iPhone beeps, speak into the microphone.**
The iPhone beeps again, then Siri starts responding.

To deactivate Siri Eyes Free

Touch [Close].

Notes

- The iPhone may not recognize your voice depending on usage conditions. (For example, if you are in a moving car.)
- Siri Eyes Free may not function properly, or the response time may lag in locations where iPhone signals are difficult to receive.
- Depending on the iPhone's operating condition, Siri Eyes Free may not function properly, or may quit.
- If you play a track with an iPhone using the BLUETOOTH audio connection, when the track starts playback via BLUETOOTH, Siri Eyes Free automatically quits and the unit switches to the BLUETOOTH audio source.
- When Siri Eyes Free is activated during audio playback, the unit may switch to the BLUETOOTH audio source even if you do not specify a track to play.
- When connecting the iPhone to the USB port, Siri Eyes Free may not function properly, or may quit.
- When connecting the iPhone to the unit via USB, do not activate Siri with the iPhone. Siri Eyes Free may not function properly, or may quit.
- There is no audio sound while Siri Eyes Free is activated.

Settings

Basic Setting Operation

You can set items in the following setup categories:
General Settings,
Sound Settings,
Screen Settings,
Visual Settings

1 **Press HOME, then touch [Settings].**

2 **Touch one of the setup category icons.**
The items that can be set differ depending on the source and settings.

3 **Touch ▲/▼ to select the desired item.**

To return to the previous display
Touch .

To switch to the playback screen
Touch .

General Settings

Language
Selects the display language: [English], [Español], [Русский].

Time Format
Changes the time format: [12-hour], [24-hour].

Clock Time
Sets the clock time by the RDS data: [OFF], [ON].

Clock Adjust
Sets the clock time manually.
(Available only when [Clock Time] is set to [OFF].)

Beep
Activates the operation sound: [OFF], [ON].

Dimmer
Dims the display: [OFF], [Auto], [ON].
([Auto] is available only when the illumination control lead is connected, and works when the head light is turned on.)

Dimmer Level
Adjusts the brightness level when the dimmer is activated: –5 to +5.

Touch Panel Adjust
Adjusts the touch panel calibration if the touching position does not correspond with the proper item.

Output Color System
Changes the color system according to the connected monitor (SECAM is not supported): [NTSC], [PAL].
(Available only when no source is selected.)

Camera Input
Selects the image from the rear view camera: [Normal], [Reverse] (mirror image), [OFF].

Steering Control
Selects the input mode for the connected remote control. To prevent a malfunction, be sure to match the input mode with the connected remote control before use.
Custom
Input mode for the steering wheel remote control (Automatically selected when [User Defined] is complete.).
Preset
Input mode for the wired remote control excluding the steering wheel remote control.

User Defined
The steering button panel appears.
❶ Press and hold the button you want to assign to the steering wheel.
The button on the panel lights up (standby).
❷ Press and hold the button on the steering wheel you want to assign the function to.
The button on the panel changes to blue (registration complete).
❸ To register other functions, repeat steps ❶ and ❷.
(Available only when [Steering Control] is set to [Custom].)

Notes
- While making settings, only button operation on the unit is available. For safety, park your car before making this setting.
- If an error occurs while registering, all the registered information is cleared. Restart registration from the beginning.
- This function may not be available on some vehicles. For details on the compatibility of your vehicle, visit the support site on the back cover.

Bluetooth Connection
Activates the BLUETOOTH signal: [OFF], [ON], [Pairing] (enters into pairing standby mode).

Bluetooth Device Info
Displays the information of the device connected to the unit by touching [Open]. (Available only when [Bluetooth Connection] is set to [ON].)

Bluetooth Reset
Initializes all BLUETOOTH-related settings such as pairing information, call history, preset dial, history of connected BLUETOOTH devices, etc.

SongPal
Establishes or terminates the "SongPal" function (connection): [Connect], [Disconnect].

SOURCE Key Func.
Assigns the voice command function or the display menu to the SOURCE button: [Voice], [DSPL].

Rear View Camera
Adjusts the length and/or position of the marker lines on the picture from the rear view camera by touching [Line Edit].

Tuner Step
Sets the FM/AM tuning step of your country: [9kHz/50kHz], [10kHz/100kHz], [10kHz/200kHz].

♪Sound Settings

Mega Bass
Reinforces bass sound in synchronization with the volume level: [1], [2], [OFF].

EQ5/Subwoofer
Selects an equalizer curve and adjusts the subwoofer level.
EQ5
Selects the equalizer curve: [Regueton], [Salsa], [Electronica], [R&B], [Pop], [Rock], [Hip-Hop], [Jazz], [Dance], [Custom], [OFF].
[Custom] adjusts the equalizer curve: –8 to +8.
Subwoofer
Adjusts the volume level of the subwoofer: [OFF], –10 to +10.

Balance/Fader
Adjusts the balance/fader level.
Balance
Adjusts the sound balance between the left and right speakers: L15 to R15.
Fader
Adjust the sound balance between the front and rear speakers: Front 15 to Rear 15.

Crossover
Adjusts the cut-off frequency and subwoofer phase.
High Pass Filter
Selects the cut-off frequency of the front/rear speakers: [63Hz], [100Hz], [120Hz], [150Hz], [180Hz], [OFF].
Low Pass Filter
Selects the cut-off frequency of the subwoofer: [OFF], [55Hz], [85Hz], [120Hz], [160Hz].
Subwoofer Phase
Selects the subwoofer phase: [Normal], [Reverse].

Screen Settings

Demo
Activates the demonstration: [OFF], [ON].

Wallpaper
Changes the basis color of the background by touching the desired color.

Visual Settings

Available only when no source is selected.

Monitor Type
Selects an aspect ratio suitable for the unit and connected monitor.
16:9
Displays a wide picture. Suitable when connecting to a wide-screen monitor or a monitor with a wide mode function.
Letterbox
Displays a wide picture with bands on the upper and lower positions of the screen. Suitable when connecting to a 4:3 screen monitor.
Pan Scan
Displays a wide picture on the entire screen and automatically cuts off the portions that do not fit.

Additional Information

Precautions

- Cool off the unit beforehand if your car has been parked in direct sunlight.
- Power antenna (aerial) extends automatically.

To maintain high sound quality

Do not splash liquid onto the unit.

Notes on safety

- Comply with your local traffic rules, laws, and regulations.
- While driving
  – Do not watch or operate the unit, as it may lead to distraction and cause an accident. Park your car in a safe place to watch or operate the unit.
  – Do not use the setup feature or any other function which could divert your attention from the road.
  – When backing up your car, be sure to look back and watch the surroundings carefully for your safety, even if the rear view camera is connected. Do not depend on the rear view camera exclusively.
- While operating
  – Do not insert your hands, fingers, or foreign objects into the unit, as it may cause injury or damage to the unit.
  – Keep small articles out of the reach of children.
  – Be sure to fasten seatbelts to avoid injury in the event of sudden movement of the car.

Preventing an accident
Pictures appear only after you park the car and set the parking brake.
If the car starts moving during video playback, the following caution is displayed and you cannot watch the video.

[Video blocked for your safety.]

The monitor connected to the REAR VIDEO OUT is active while the car is in motion.
You cannot watch the video, but you can hear audio.

Do not operate the unit or watch the monitor while driving.

Notes on LCD panel

- Do not get the LCD panel wet or expose it to liquids. This may cause a malfunction.

- Do not press down hard on the LCD panel as doing so can distort the picture or cause a malfunction (i.e., the picture may become unclear, or the LCD panel may be damaged).
- Do not touch the panel with objects other than with your finger, as it may damage or break the LCD panel.
- Clean the LCD panel with a dry soft cloth. Do not use solvents such as benzine, thinner, commercially available cleaners, or antistatic spray.
- Do not use this unit outside the temperature range 0 – 40 °C (32 – 104 °F).
- If your car was parked in a cold or hot place, the picture may not be clear. However, the monitor is not damaged, and the picture will become clear after the temperature in your car becomes normal.
- Some stationary blue, red, or green dots may appear on the monitor. These are called "bright spots," and can happen with any LCD. The LCD panel is precision-manufactured with more than 99.99% of its segments functional. However, it is possible that a small percentage (typically 0.01%) of the segments may not light up properly. This will not, however, interfere with your viewing.

Playback order of audio/video files

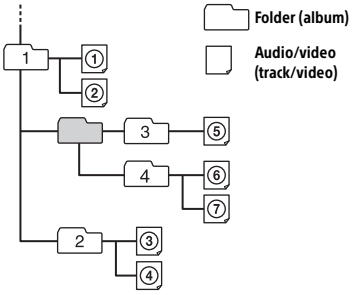

About WMA files

WMA*1 files meeting the following requirements can be played. Playback is not guaranteed for all WMA files meeting the requirements.

Codec

- Media File format: ASF file format
- File extension: .wma
- Bit rate: 48 to 192 kbps (Supports variable bit rate (VBR))*2
- Sampling frequency*3: 44.1 kHz

About MP3 files

MP3 files meeting the following requirements can be played. Playback is not guaranteed for all MP3 files meeting the requirements.

Codec

- Media File format: MP3 (MPEG-1 Layer3) file format
- File extension: .mp3
- Bit rate: 48 to 192 kbps (Supports variable bit rate (VBR))*2
- Sampling frequency*3: 32, 44.1, 48 kHz

About AAC files

AAC files meeting the following requirements can be played. Playback is not guaranteed for all AAC files meeting the requirements.

Codec

- Media File format: AAC-LC supporting ADTS/RAW/ADIF
- File extension: .m4a
- Bit rate: 40 to 320 kbps (Supports variable bit rate (VBR)/constant bit rate (CBR))*2
- Sampling frequency*3: 8 to 48 kHz
- Bit per sample (Quantization bit): 16 bits
- Channel: Mono, Stereo

About FLAC files

FLAC files meeting the following requirements can be played. Playback is not guaranteed for all FLAC files meeting the requirements.

Codec

- File extension: .flac
- Sampling frequency*3*4: 8 to 96 kHz
- Bit per sample (Quantization bit)*4: 8, 12, 16, 20, 24 bits
- Channel: Mono, Stereo (excluding 5.1 ch file)

About WAV files

WAV files meeting the following requirements can be played. Playback is not guaranteed for all WAV files meeting the requirements.

Codec

- File extension: .wav
- Bit rate: 16 kbps to 1.536 Mbps (Supports variable bit rate (VBR)/constant bit rate (CBR))*2
- Sampling frequency*3: 8 to 48 kHz
- Bit per sample (Quantization bit): 16, 24 bits
- Channel: Mono, Stereo

About Xvid files

Xvid files meeting the following requirements can be played. Playback is not guaranteed for all Xvid files meeting the requirements.

Codec

- Media File format: Xvid file format
- File extension: .avi
- Video codec: MPEG-4 Advanced Simple Profile
- Audio codec: MP3 (MPEG-1 Layer3)
- Bit rate: Max. 8 Mbps
- Frame rate: Max. 30 fps (30p/60i)
- Resolution: Max. 720 × 576*5

About MPEG-4 files

MPEG-4 files meeting the following requirements can be played. Playback is not guaranteed for all MPEG-4 files meeting the requirements.

Codec

- Media File format: MP4 file format
- File extension: .mp4
- Video codec: MPEG-4 Simple Profile
- Audio codec: AAC
- Bit rate: Max. 4 Mbps
- Frame rate: Max. 30 fps (30p/60i)
- Resolution: Max. 720 × 576*5

About JPEG files

JPEG*6 files meeting the following requirements can be played. Playback is not guaranteed for all JPEG files meeting the requirements.

Codec

- Media File format: Compatible with DCF 2.0/Exif 2.21 file format
- File extension: .jpg
- Profile: Baseline Profile
- Number of pixels: Max. 6,048 × 4,032 pixels (24,000,000 pixels)

*1 Copyright protected WMA files cannot be played back.
*2 Non-standard bit rates or non-guaranteed bit rates are included depending on the sampling frequency.
*3 Sampling frequency may not correspond to all encoders.
*4 High-resolution audio contents will be down-converted during playback.
*5 These numbers indicate the maximum resolution of playable video and do not indicate the player's display resolution. The display resolution is 800 × 480.
*6 Some photo files cannot be played back depending on their file formats.

About iPod

- You can connect to the following iPod models. Update your iPod devices to the latest software before use.

Compatible iPhone/iPod models

Compatible Model	Bluetooth®	USB
iPhone 6 Plus	○	○
iPhone 6	○	○
iPhone 5s	○	○
iPhone 5c	○	○
iPhone 5	○	○
iPhone 4s	○	○
iPhone 4	○	○
iPhone 3GS	○	○
iPod touch (5th generation)	○	○
iPod touch (4th generation)	○	○
iPod touch (3rd generation)		○
iPod classic		○
iPod nano (7th generation)		○
iPod nano (6th generation)		○
iPod nano (5th generation)		○

- "Made for iPod," and "Made for iPhone," mean that an electronic accessory has been designed to connect specifically to iPod or iPhone, respectively, and has been certified by the developer to meet Apple performance standards. Apple is not responsible for the operation of this device or its compliance with safety and regulatory standards. Please note that the use of this accessory with iPod or iPhone may affect wireless performance.

If you have any questions or problems concerning your unit that are not covered in this Operating Instructions, consult your nearest Sony dealer.

Maintenance

Replacing the lithium battery of the remote commander

Under normal conditions, the battery will last approximately 1 year. (The service life may be shorter depending on the conditions of use.)
When the battery becomes weak, the range of the remote commander becomes shorter.

CAUTION

Danger of explosion if battery is incorrectly replaced. Replaced only with the same or equivalent type.

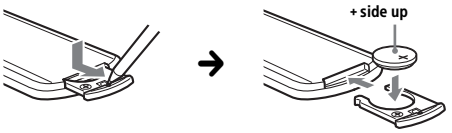

Notes on the lithium battery

- Keep the lithium battery out of the reach of children. Should the battery be swallowed, immediately consult a doctor.
- Wipe the battery with a dry cloth to ensure good contact.
- Be sure to observe the correct polarity when installing the battery.
- Do not hold the battery with metallic tweezers, otherwise a short-circuit may occur.

WARNING

Battery may explode if mistreated.
Do not recharge, disassemble, or dispose of in fire.

Specifications

Monitor section

Display type: Wide LCD color monitor
Dimensions: 6.95 in
System: TFT active matrix
Number of pixels:
1,152,000 pixels (800 × 3 (RGB) × 480)
Color system:
PAL/NTSC/SECAM/PAL-M automatic select

Tuner section

FM

Tuning range:
87.5 – 108.0 MHz (at 50 kHz step)
87.5 – 108.0 MHz (at 100 kHz step)
87.5 – 107.9 MHz (at 200 kHz step)
FM tuning step:
50 kHz/100 kHz/200 kHz switchable
Antenna (aerial) terminal:
External antenna (aerial) connector
Intermediate frequency: 150 kHz
Usable sensitivity: 10 dBf
Selectivity: 70 dB at 400 kHz
Signal-to-noise ratio: 70 dB (mono)
Separation at 1 kHz: 30 dB
Frequency response: 20 – 15,000 Hz

AM

Tuning range:
531 – 1,602 kHz (at 9 kHz step)
530 – 1,710 kHz (at 10 kHz step)
AM tuning step:
9 kHz/10 kHz switchable
Antenna (aerial) terminal:
External antenna (aerial) connector
Intermediate frequency:
9,267 kHz or 9,258 kHz/4.5 kHz (at 9 kHz step)
9,267.5 kHz or 9,257.5 kHz/5 kHz (at 10 kHz step)
Sensitivity: 44 µV

USB Player section

Interface: USB (Full-speed)
Maximum current: 1 A

Wireless Communication

Communication System:
BLUETOOTH Standard version 3.0
Output:
BLUETOOTH Standard Power Class 2
(Max. +4 dBm)
Maximum communication range:
Line of sight approx. 10 m (33 ft)*1
Frequency band:
2.4 GHz band (2.4000 – 2.4835 GHz)
Modulation method: FHSS
Compatible BLUETOOTH Profiles*2:
A2DP (Advanced Audio Distribution Profile) 1.2

AVRCP (Audio Video Remote Control Profile) 1.4
HFP (Handsfree Profile) 1.6
PBAP (Phone Book Access Profile)
OPP (Object Push Profile)
SPP (Serial Port Profile)
Corresponding codec: SBC (.sbc)

*1 The actual range will vary depending on factors such as obstacles between devices, magnetic fields around a microwave oven, static electricity, reception sensitivity, antenna (aerial)'s performance, operating system, software application, etc.
*2 BLUETOOTH standard profiles indicate the purpose of BLUETOOTH communication between devices.

Power amplifier section

Outputs: Speaker outputs
Speaker impedance: 4 – 8 ohms
Maximum power output: 55 W × 4 (at 4 ohms)

General

Outputs:
Video output terminal (REAR)
Audio output terminals (FRONT, REAR, SUB)
Power antenna (aerial)/Power amplifier control terminal (REM OUT)
Inputs:
Illumination control terminal
Steering control input terminal
Antenna (aerial) input terminal
Microphone input terminal
Parking brake control terminal
Reverse input terminal
Camera input terminal
AUX Audio/Video input terminal
USB port
Power requirements: 12 V DC car battery (negative ground (earth))
Rated current consumption: 10 A
Dimensions: Approx. 178 mm × 100 mm × 172.8 mm (7 1/8 in × 4 in × 6 7/8 in) (w/h/d)
Mounting dimensions:
Approx. 178 mm × 100 mm × 162 mm (7 1/8 in × 4 in × 6 1/2 in) (w/h/d)
Mass: Approx. 1.3 kg (2 lb 14 oz)
Package contents:
Main unit (1)
Parts for installation and connections (1 set)
Remote Commander (1): RM-X170
Microphone (1)
Optional accessories/equipment:
Mounting bracket: GMD-D100
Cable for steering wheel remote input: RC-SR1

Your dealer may not handle some of the above listed accessories. Please ask the dealer for detailed information.

Design and specifications are subject to change without notice.

Copyrights

The Bluetooth® word mark and logos are registered trademarks owned by Bluetooth SIG, Inc. and any use of such marks by Sony Corporation is under license. Other trademarks and trade names are those of their respective owners.

The N-Mark is a trademark or registered trademark of NFC Forum, Inc. in the United States and in other countries.

Windows Media is either a registered trademark or trademark of Microsoft Corporation in the United States and/or other countries.

This product is protected by certain intellectual property rights of Microsoft Corporation. Use or distribution of such technology outside of this product is prohibited without a license from Microsoft or an authorized Microsoft subsidiary.

iPhone, iPod, iPod classic, iPod nano, iPod touch, and Siri are trademarks of Apple Inc., registered in the U.S. and other countries. App Store is a service mark of Apple Inc.

MPEG Layer-3 audio coding technology and patents licensed from Fraunhofer IIS and Thomson.

Google, Google Play and Android are trademarks of Google Inc.

This product uses font data which is licensed to Sony owned by Monotype Imaging Inc.
Such font data shall be used solely in connection with this product.

All other trademarks are trademarks of their respective owners.

THIS PRODUCT IS LICENSED UNDER THE MPEG-4 VISUAL PATENT PORTFOLIO LICENSE FOR THE PERSONAL AND NON-COMMERCIAL USE OF A CONSUMER FOR DECODING VIDEO IN COMPLIANCE WITH THE MPEG-4 VISUAL STANDARD ("MPEG-4 VIDEO") THAT WAS ENCODED BY A CONSUMER ENGAGED IN A PERSONAL AND NONCOMMERCIAL ACTIVITY AND/OR WAS OBTAINED FROM A VIDEO PROVIDER LICENSED BY MPEG LA TO PROVIDE MPEG-4 VIDEO.
NO LICENSE IS GRANTED OR SHALL BE IMPLIED FOR ANY OTHER USE.
ADDITIONAL INFORMATION INCLUDING THAT RELATING TO PROMOTIONAL, INTERNAL AND COMMERCIAL USES AND LICENSING MAY BE OBTAINED FROM MPEG LA, LLC. SEE HTTP://WWW.MPEGLA.COM

libFLAC

Copyright (C) 2000-2009 Josh Coalson
Copyright (C) 2011-2013 Xiph.Org Foundation

Redistribution and use in source and binary forms, with or without modification, are permitted provided that the following conditions are met:

— Redistributions of source code must retain the above copyright notice, this list of conditions and the following disclaimer.

— Redistributions in binary form must reproduce the above copyright notice, this list of conditions and the following disclaimer in the documentation and/or other materials provided with the distribution.

— Neither the name of the Xiph.org Foundation nor the names of its contributors may be used to endorse or promote products derived from this software without specific prior written permission.

THIS SOFTWARE IS PROVIDED BY THE COPYRIGHT HOLDERS AND CONTRIBUTORS "AS IS" AND ANY EXPRESS OR IMPLIED WARRANTIES, INCLUDING, BUT NOT LIMITED TO, THE IMPLIED WARRANTIES OF MERCHANTABILITY AND FITNESS FOR A PARTICULAR PURPOSE ARE DISCLAIMED. IN NO EVENT SHALL THE FOUNDATION OR CONTRIBUTORS BE LIABLE FOR ANY DIRECT, INDIRECT, INCIDENTAL, SPECIAL, EXEMPLARY, OR CONSEQUENTIAL DAMAGES (INCLUDING, BUT NOT LIMITED TO, PROCUREMENT OF SUBSTITUTE GOODS OR SERVICES; LOSS OF USE, DATA, OR PROFITS; OR BUSINESS INTERRUPTION) HOWEVER CAUSED AND ON ANY THEORY OF LIABILITY, WHETHER IN CONTRACT, STRICT LIABILITY, OR TORT (INCLUDING NEGLIGENCE OR OTHERWISE) ARISING IN ANY WAY OUT OF THE USE OF THIS SOFTWARE, EVEN IF ADVISED OF THE POSSIBILITY OF SUCH DAMAGE.

Troubleshooting

The following checklist will help you remedy problems you may encounter with your unit.
Before going through the checklist below, check the connection and operating procedures.
For details on using the fuse and removing the unit from the dashboard, see "Connection/Installation" (page 28).
If the problem is not solved, visit the support site on the back cover.

General

No power is being supplied to the unit.
→ Check the fuse.
→ The connection is not correct.
  — Connect the yellow and red power supply leads.

There is no beep sound.
→ An optional power amplifier is connected and you are not using the built-in amplifier.

The contents of the memory have been erased.
→ The power supply lead or battery has been disconnected or it is not connected properly.

Stored stations and correct time are erased.
The fuse has blown.
The unit makes noise when the position of the ignition is switched.
→ The leads are not matched correctly with the car's accessory power connector.

The display disappears from/does not appear on the monitor.
→ The dimmer is set to [ON] (page 17).
→ The display disappears if you press and hold HOME.
  — Press HOME on the unit until the display appears.
→ The monitor off function is activated (page 5).
  — Touch anywhere on the display to turn the display back on.

The display does not respond to your touch correctly.
→ Touch one part of the display at a time. If two or more parts are touched simultaneously, the display will not operate correctly.
→ Calibrate the touch panel of the display (page 17).
→ Touch the pressure sensitive panel firmly.
→ The rear monitor cannot be operated. Icons displayed on the rear monitor are disabled.

Menu items cannot be selected.
→ Unavailable menu items are displayed in gray.

Radio reception

The stations cannot be received.
The sound is hampered by noise.
→ The connection is not correct.
  — Connect the REM OUT lead (blue/white striped) or accessory power supply lead (red) to the power supply lead of a car's antenna (aerial) booster (only when your car has built-in radio antenna (aerial) in the rear/side glass).
  — Check the connection of the car antenna (aerial).
  — If the auto antenna (aerial) will not extend, check the connection of the power antenna (aerial) control lead.
→ The tuning step setting has been erased.
  — Set the tuning step again (page 18).

Preset tuning is not possible.
→ The broadcast signal is too weak.

RDS

PTY displays [PTY not found.].
→ The current station is not RDS station.
→ RDS data has not been received.
→ The station does not specify the program type.

Picture

There is no picture/picture noise occurs.
→ A connection has not been made correctly.
→ Check the connection between this unit and other equipment and set the input selector of the equipment to the source corresponding to this unit.
→ Installation is not correct.
– Install the unit at an angle of less than 45° in a sturdy part of the car.
→ The parking cord (light green) is not connected to the parking brake switch cord, or the parking brake is not applied.

The picture does not fit in the screen.
→ The aspect ratio is fixed on the playback source.

There is no picture/picture noise occurs in the rear monitor.
→ A source/mode which is not connected is selected. If there is no input, no picture appears in the rear monitor.
→ The color system setting is incorrect.
– Set the color system to [PAL] or [NTSC] according to the connected monitor (page 17).
→ The picture of the rear view camera is displayed on this unit.
– No picture appears in the rear monitor if the picture of the rear view camera is displayed on this unit.

Sound

There is no sound/sound skips/sound cracks.
→ A connection has not been made correctly.
→ Check the connection between this unit and the connected equipment and set the input selector of the equipment to the source corresponding to this unit.
→ Installation is not correct.
– Install the unit at an angle of less than 45° in a sturdy part of the car.
→ The MP3 file sampling rate is not 32, 44.1, or 48 kHz.
→ The WMA file sampling rate is not 44.1 kHz.
→ The MP3 file bit rate is not 48 to 192 kbps.
→ The WMA file bit rate is not 48 to 192 kbps.
→ The unit is in pause/reverse/fast-forward mode.
→ The settings for the outputs are not made correctly.
→ The volume is too low.
→ The ATT function is activated.
→ The format is not supported.
– Check if the format is supported by this unit (page 20).

Sound is noisy.
→ Keep cords and cables away from each other.

USB playback

Items cannot be played via a USB hub.
→ Connect iPod/USB devices to this unit without USB hub.

Items cannot be played.
→ Reconnect the USB device.

The USB device takes longer to play.
→ The USB device contains large-sized files or files with a complicated tree structure.

The sound is intermittent.
→ The sound may be intermittent at a high bit rate.

Audio file cannot be played.
→ USB device formatted with file systems other than FAT16, FAT32, or exFAT are unsupported.*

* This unit supports FAT16, FAT32, and exFAT, but some USB device may not support all of these. For details, refer to the operating instructions of each USB device or contact the manufacturer.

NFC function

One touch connection (NFC) is not possible.
→ If the smartphone does not respond to the touch.
– Check that the NFC function of the smartphone is turned on.
– Move the N-Mark part of the smartphone closer to the N-Mark part on this unit.
– If the smartphone is in a case, remove it.
→ NFC receiving sensitivity depends on the device. If One touch connection with the smartphone fails several times, make BLUETOOTH connection manually.

BLUETOOTH function

The other BLUETOOTH device cannot detect this unit.
→ Set [Bluetooth Connection] to [ON] (page 17).
→ While connecting to a BLUETOOTH device, this unit cannot be detected by another device. Terminate the current connection and search for this unit from the other device. The disconnected device can be reconnected by selecting from the list of registered devices.

Connection is not possible.
→ Check the pairing and connection procedures in the manual of the other device, etc., and perform the operation again.

The name of the detected device does not appear.
→ Depending on the status of the other device, it may not be possible to obtain the name.

There is no ringtone.
→ Raise the volume while receiving a call.

The talker's voice volume is low.
→ Raise the volume during a call.

The other party says that the volume is too low or high.
→ Adjust the [MIC Gain] level (page 14).

Echo or noise occurs during call conversations.
→ Reduce the volume.
→ If ambient noise other than the phone call sound is loud, try reducing this noise.
— Shut the window if road noise is loud.
— Lower the air conditioner if the air conditioner is loud.

The phone sound quality is poor.
→ Phone sound quality depends on reception conditions of the cellular phone.
— Move your car to a place where you can enhance the cellular phone's signal if the reception is poor.

The volume of the connected BLUETOOTH device is low or high.
→ Volume level will differ depending on the BLUETOOTH device.
— Reduce the volume level differences between this unit and the BLUETOOTH device (page 12).

The sound skips during audio streaming or the BLUETOOTH connection fails.
→ Reduce the distance between the unit and the BLUETOOTH device.
→ If the BLUETOOTH device is stored in a case which interrupts the signal, remove the case while using the device.
→ Several BLUETOOTH devices or other devices (e.g. ham radio devices) which emit radio waves are used nearby.
— Turn off the other devices.
— Increase the distance between the unit and other devices.
→ Playback sound stops momentarily when this unit is connecting to a cellular phone. This is not a malfunction.

You cannot control the connected BLUETOOTH device during audio streaming.
→ Check that the connected BLUETOOTH device supports AVRCP.

Some functions do not work.
→ Check that the connecting device supports the functions in question.

A call is answered unintentionally.
→ The connecting phone is set to start a call automatically.
→ [Auto Answer] of this unit is set to [ON] (page 14).

Pairing failed due to time out.
→ Depending on the connecting device, the time limit for pairing may be short. Try completing the pairing within the time by setting a single digit passkey.

The BLUETOOTH function cannot be operated.
→ Exit the source by pressing and holding SOURCE for 1 second, then turn on the unit.

No sound is output from the car speakers during a handsfree call.
→ If the sound is output from the cellular phone, set the cellular phone to output the sound from the car speakers.

Siri Eyes Free is not activated.
→ Perform the handsfree registration for an iPhone that supports Siri Eyes Free.
→ Set the Siri function on the iPhone to on.
→ Cancel the BLUETOOTH connection with the iPhone and the unit, and reconnect.

SongPal operation

Application name is mismatched with the actual application in "SongPal."
→ Launch the application again from the "SongPal" application.

Error displays/messages

Hubs not supported.
→ USB hubs are not supported on this unit.

No Playable Data
→ The iPod has no playable data.
— Load music data/files into the iPod.
→ The USB device has no playable data.
— Load music data/files into the USB device.

Cannot play this content.
→ The currently selected content cannot be played back.
— Playback content will be skipped to the next one.

Overcurrent Caution on USB
→ The USB device is overloaded.
– Disconnect the USB device, then change the source by pressing the SOURCE button.
– Indicates that the USB device is out of order, or an unsupported device is connected.

USB device not supported
→ For details on the compatibility of your USB device, visit the support site on the back cover.

Device no response
→ The unit does not recognize the connected USB device.
– Reconnect the USB device.
– Check that the USB device is supported by the unit.

_ (underscore)
→ The character cannot be displayed with the unit.

For BLUETOOTH function

Bluetooth Connection Error
→ An error has occurred between this unit and the BLUETOOTH phone.
– Check that the BLUETOOTH signal is set to on for this unit or the BLUETOOTH phone.
– Try pairing again.
– Reconnect the BLUETOOTH phone.

Bluetooth device is not found.
→ The unit cannot detect a connectable BLUETOOTH device.
– Check the BLUETOOTH setting of the connecting device.
→ No device is in the list of registered BLUETOOTH devices.
– Perform pairing with a BLUETOOTH device (page 8).

Call Data Error
→ An error has occurred while accessing phonebook data via PBAP or call history from the BLUETOOTH phone.
– Reconnect the BLUETOOTH phone.

Data Listing Error
→ An error has occurred while displaying phonebook data via PBAP or call history from the BLUETOOTH phone.
– Reconnect the BLUETOOTH phone.

Handsfree device is not available.
→ A cellular phone is not connected.
– Connect a cellular phone (page 9).

For steering wheel remote control operation:

Please retry
→ An error occurs while registering and all the registered information is cleared.
– Restart registration from the beginning.

If these solutions do not help improve the situation, consult your nearest Sony dealer.

Connection/Installation

Cautions

- **Run all ground (earth) leads to a common ground (earth) point.**
- Do not get the leads trapped under a screw or caught in moving parts (e.g., seat railing).
- Before making connections, turn the car ignition off to avoid short circuits.
- Connect the **yellow** and **red** power supply leads only after all other leads have been connected.
- Be sure to insulate any loose unconnected leads with electrical tape for safety.

Precautions

- Choose the installation location carefully so that the unit will not interfere with normal driving operations.
- Avoid installing the unit in areas subject to dust, dirt, excessive vibration, or high temperature, such as in direct sunlight or near heater ducts.
- Use only the supplied mounting hardware for a safe and secure installation.

Note on the power supply lead (yellow)
When connecting this unit in combination with other stereo components, the amperage rating of the car circuit to which the unit is connected must be higher than the sum of each component's fuse amperage rating.

Mounting angle adjustment

Adjust the mounting angle to less than 45°.

Parts List for Installation

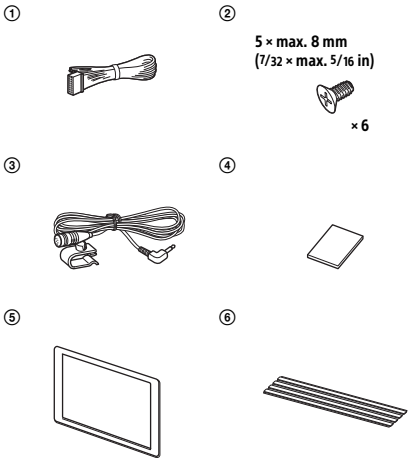

This parts list does not include all the package contents.

Connection

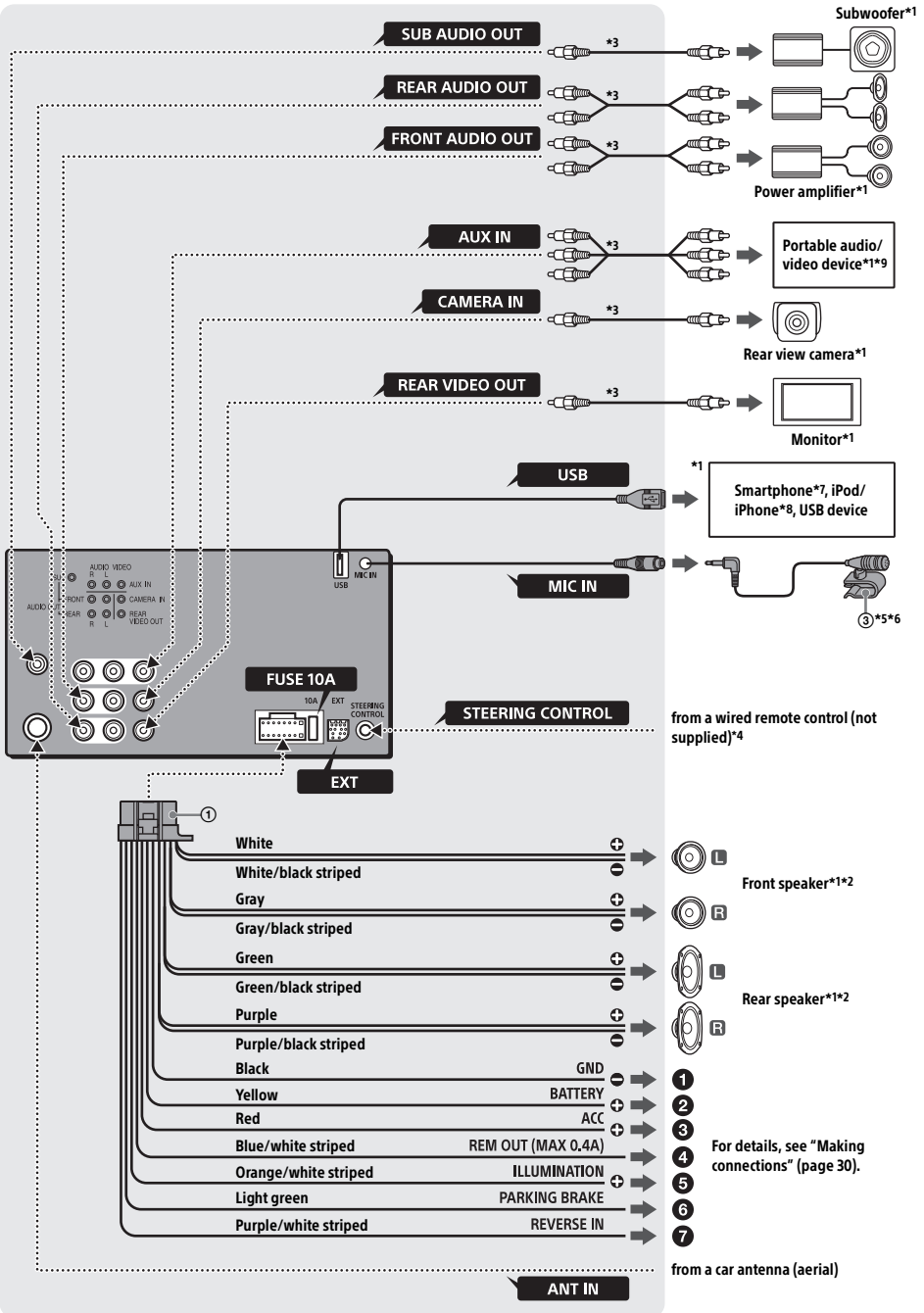
SUB AUDIO OUT
REAR AUDIO OUT
FRONT AUDIO OUT
AUX IN
CAMERA IN
REAR VIDEO OUT
USB
MIC IN
FUSE 10A
STEERING CONTROL
EXT
ANT IN
Subwoofer*1
Power amplifier*1
Portable audio/ video device*1*9
Rear view camera*1
Monitor*1
Smartphone*7, iPod/ iPhone*8, USB device
*5*6
from a wired remote control (not supplied)*4
White
White/black striped
Gray
Gray/black striped
Green
Green/black striped
Purple
Purple/black striped
Black GND
Yellow BATTERY
Red ACC
Blue/white striped REM OUT (MAX 0.4A)
Orange/white striped ILLUMINATION
Light green PARKING BRAKE
Purple/white striped REVERSE IN
Front speaker*1*2
Rear speaker*1*2
For details, see "Making connections" (page 30).
from a car antenna (aerial)

*1 Not supplied
*2 Speaker impedance: 4 – 8 Ω × 4
*3 RCA pin cord (not supplied)
*4 Depending on the type of car, use an adaptor for a wired remote control (not supplied).
For details on using the wired remote control, see "Using the wired remote control" (page 31).
*5 Whether in use or not, route the microphone input cord so it does not interfere with driving operations. Secure the cord with a clamp, etc., if it is installed around your feet.
*6 For details on installing the microphone, see "Installing the microphone" (page 31).
*7 To connect a smartphone to the main unit, an appropriate cable (not supplied) is required.
*8 To connect an iPod/iPhone, use the USB connection cable for iPod (not supplied).
*9 Such as a portable media player, game console, etc.

Making connections

❶ **To a common ground (earth) point**
First connect the black ground (earth) lead, then connect the yellow and red power supply leads.

❷ **To the +12 V power terminal which is energized at all times**
Be sure to first connect the black ground (earth) lead to a common ground (earth) point.

❸ **To the +12 V power terminal which is energized when the ignition switch is set to the accessory position**
If there is no accessory position, connect to the +12 V power (battery) terminal which is energized at all times.
Be sure to first connect the black ground (earth) lead to a common ground (earth) point.

❹ **To the power antenna (aerial) control lead or the power supply lead of the antenna (aerial) booster**
It is not necessary to connect this lead if there is no power antenna (aerial) or antenna (aerial) booster, or with a manually-operated telescopic antenna (aerial).
To AMP REMOTE IN of an optional power amplifier
This connection is only for amplifiers and a power antenna (aerial). Connecting any other system may damage the unit.

❺ **To a car's illumination signal**
Be sure to first connect the black ground (earth) lead to a common ground (earth) point.

❻ **To the parking brake switch cord**
The mounting position of the parking brake switch cord depends on your car.
Be sure to connect the parking brake lead (light green) of the power supply connection cable ① to the parking brake switch cord.

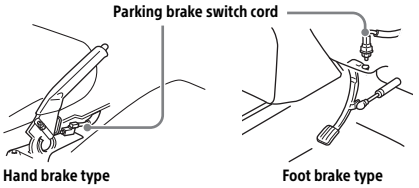

❼ **To the +12 V power terminal of the car's rear lamp lead (only when connecting the rear view camera)**

Memory hold connection

When the yellow power supply lead is connected, power will always be supplied to the memory circuit even when the ignition switch is turned off.

Speaker connection

- Before connecting the speakers, turn the unit off.
- Use speakers with an impedance of 4 to 8 ohms and with adequate power handling capacities to avoid damage.

Monitor connection

When installing a monitor for the rear seat, connect its parking brake switch cord to the ground (earth).

Installing the microphone

To capture your voice during handsfree calling, you need to install the microphone ③.

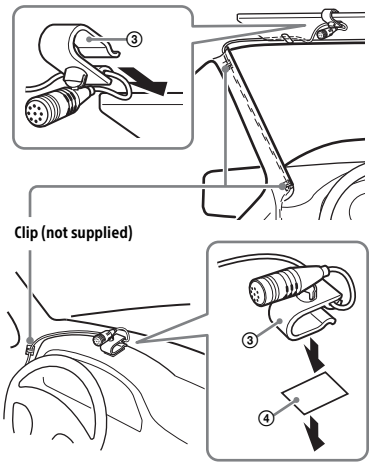

Cautions

- It is extremely dangerous if the cord becomes wound around the steering column or gearstick. Be sure to keep it and other parts from interfering with your driving operations.
- If airbags or any other shock-absorbing equipment are in your car, contact the store where you purchased this unit, or the car dealer, before installation.

Note

Before attaching the double-sided tape ④, clean the surface of the dashboard with a dry cloth.

Using the wired remote control

When using the steering wheel remote control

Installation of the connection cable RC-SR1 (not supplied) is required before use.

1 **To enable the steering wheel remote control, select [General Settings] → [User Defined] to make the registration (page 17).**
When the registration is complete, the steering wheel remote control becomes available.

Notes on installing the connection cable RC-SR1 (not supplied)

- Refer to the support sites on the back cover for details, then connect each lead properly to the appropriate leads. Making an improper connection may damage the unit.
- Consulting the dealer or an experienced technician for help is recommended.

When using the wired remote control

1 **To enable the wired remote control, set [Steering Control] in [General Settings] to [Preset] (page 17).**

Using the rearview camera

Installation of the rearview camera (not supplied) is required before use.
The image of a rearview camera connected to the CAMERA IN terminal is displayed when:

– the back lamp of your car lights up (or the shift lever is set to the R (reverse) position).
– you press HOME, then touch [Rear Camera].

Installation

Mounting the unit in the dashboard

For Japanese cars, see "Mounting the unit in a Japanese car" (page 32).

Mounting the unit with an installation kit (not supplied)

Before installing, make sure the catches on both sides of the bracket are bent inwards 3.5 mm (5/32 in).

1 Position the bracket inside the dashboard, then bend the claws outward for a tight fit.

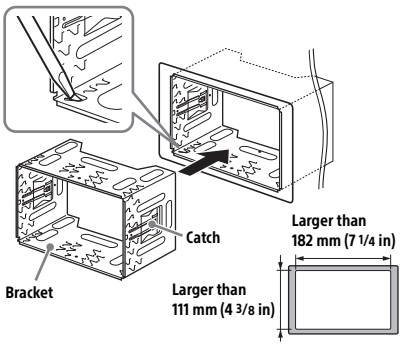

2 Mount the unit onto the bracket.

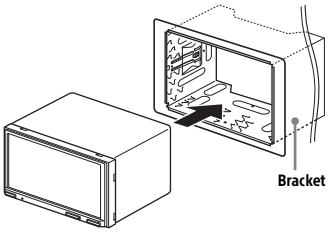

Note
If the catches are straight or bent outwards, the unit will not be installed securely and may spring out.

Mounting the unit in a Japanese car

You may not be able to install this unit in some Japanese cars. In such a case, consult your Sony dealer.

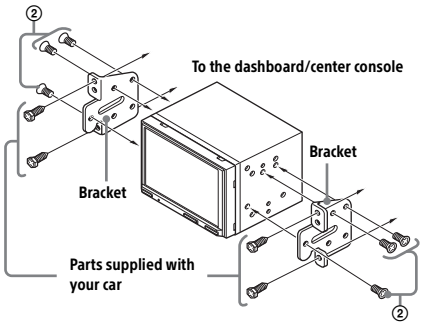

When mounting this unit to the preinstalled brackets of your car, use the supplied screws ② in the appropriate screw holes based on your car:
T for TOYOTA, M for MITSUBISHI and N for NISSAN.

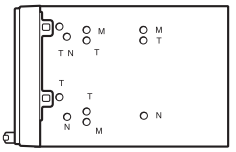

Note
To prevent a malfunction, install only with the supplied screws ②.

Resetting the unit

For details, see "Resetting the Unit" (page 7).

Fuse replacement

When replacing the fuse, be sure to use one matching the amperage rating stated on the original fuse. If the fuse blows, check the power connection and replace the fuse. If the fuse blows again after replacement, there may be an internal malfunction. In such a case, consult your nearest Sony dealer.

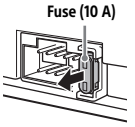

Support site

If you have any questions or for the latest support information on this product, please visit the web site below:

Sitio Web de soporte técnico en línea

Para resolver cualquier duda u obtener la información más reciente sobre el soporte técnico de este producto, visite el siguiente sitio Web:

Customers in Latin America/Clientes en Latinoamérica:

http://esupport.sony.com/ES/LA/

Customers in Asia Pacific/Clientes en Asia-Pacífico:

http://www.sony-asia.com/section/support
http://www.sony-asia.com/caraudio/

Made for iPod iPhone

http://www.sony.net/

©2016 Sony Corporation Printed in China