Audix Technology Corp.
No. 491, Zhongfu Rd., Linkou Dist.,
New Taipei City244,Taiwan

Tel: +886 2 26099301
Fax: +886 2 26099303

FCC 15.407 NII
DFS Test Report

for

Sony Group Corporation
1-7-1 Konan Minato-ku Tokyo, 108-0075 Japan

Product Name	**:**	**Digital Media Player**
Model Name	**:**	**YY1305B**
Brand	**:**	**SONY**
FCC ID	**:**	**AK8YY1305B**

Prepared by:	**:**	**AUDIX Technology Corporation,** **EMC Department**

Testing Laboratory
1724

The test report is based on a single evaluation of one sample of the above-mentioned products. It does not imply an assessment of the whole production and does not permit the use of the test lab logo.

This test report may be reproduced in full only. The document may only be updated by Audix Technology Corp. personnel. Any changes will be noted in the Document History section of the report.

Audix Technology Corp.
No. 491, Zhongfu Rd., Linkou Dist.,
New Taipei City244,Taiwan
Tel: +886 2 26099301
Fax: +886 2 26099303

TABLE OF CONTENTS

Description Page

TEST REPORT 3
1. REVISION RECORD OF TEST REPORT 4
2. SUMMARY OF TEST RESULTS 5
3. GENERAL INFORMATION 6
3.1. Description of Application 6
3.2. Description of EUT 7
3.3. Reference Test Guidance 8
3.4. Antenna Information 8
3.5. EUT Specifications Assessed in Current Report 9
3.6. Description of Key Components 9
3.7. Test Configuration 10
3.8. Tested Supporting System List 10
3.9. Description of Test Facility 10
3.10. Measurement Uncertainty 10
4. MEASUREMENT EQUIPMENTLIST 11
5. WORKING MODES AND REQUIREMENT TEST ITEM 12
5.1. Applicability of DFS Requirements Prior to Use of a Channel 12
5.2. Applicability of DFS Requirements during Normal Operation 12
6. DFS DETECTION THRESHOLOS AND RADAR TEST WAVEFORMS 13
6.1. Interference Threshold Value, Master or Client Incorporating In-Service Monitoring 13
6.2. Radar Test Waveform Minimum Step 13
6.3. Short Pulse Radar Test Waveforms 14
6.4. Long Pulse Radar Test Waveforms 15
6.5. Frequency Hopping Pulse Radar Test Waveforms 17
6.6. Conducted Calibration Setup 19
6.7. Radar Waveform Calibration Procedure 19
6.8. Calibration Deviation 19
6.9. Radar Waveform Calibration Result 20
7. TEST SETUP AND TEST RESULT 21
7.1. Test Setup 21
7.2. Channel Move Time, Channel Closing Transmission Time, Non-Occupancy Period, Non-Associated Client Beacon Measurement 23

APPENDIX A TEST PHOTOGRAPHS

This test report may be reproduced in full only. The document may only be updated by Audix Technology Corp. personnel. Any changes will be noted in the Document History section of the report.

Audix Technology Corp.
No. 491, Zhongfu Rd., Linkou Dist.,
New Taipei City244,Taiwan

Tel: +886 2 26099301
Fax: +886 2 26099303

TEST REPORT

Applicant	:	Sony Group Corporation
Manufacturer	:	Sony Group Corporation
EUT Description		
(1) Product	:	Digital Media Player
(2) Model	:	YY1305B
(3) Brand	:	SONY
(4) Power Supply	:	DC 5V by Charging or DC 3.8V by Lithium Battery

Applicable Standards:

Title 47 FCC CFR Part 15 Subpart E

Audix Technology Corp. tested the equipment mentioned in accordance with the requirements set forth in the above standards. Test results indicate that the equipment tested is capable of demonstrating compliance with the requirements as documented within this report.
Audix Technology Corp. does not assume responsibility for any conclusions and generalizations drawn from the test results with regard to other specimens and samples.

Date of Report: 2026. 10. 15

Reviewed by: Annie Yu (Annie Yu/Section Manager)

Approved by: Johnny Hsueh (Johnny Hsueh/Deputy Manager)

This test report may be reproduced in full only. The document may only be updated by Audix Technology Corp. personnel. Any changes will be noted in the Document History section of the report.

Audix Technology Corp.
No. 491, Zhongfu Rd., Linkou Dist.,
New Taipei City244,Taiwan

Tel: +886 2 26099301
Fax: +886 2 26099303

1. REVISION RECORD OF TEST REPORT

Edition No.	Issued Date	Revision Summary	Report Number
0	2026. 10. 15	Original Report	EM-F260324

This test report may be reproduced in full only. The document may only be updated by Audix Technology Corp. personnel. Any changes will be noted in the Document History section of the report.

Audix Technology Corp.
No. 491, Zhongfu Rd., Linkou Dist.,
New Taipei City244,Taiwan
Tel: +886 2 26099301
Fax: +886 2 26099303

2. SUMMARY OF TEST RESULTS

Description	Results
Channel Availability Check Time	**N/A**
Channel Move Time	**PASS**
Non-Occupancy Period	**PASS**
Non-Associated Client Beacon	**PASS**
Channel Closing Transmission Time	**PASS**
U-NII Detection Bandwidth	**N/A**
N/A is an abbreviation for Not Applicable, sine the product is client without radar detection function Note: The uncertainties value is not used in determining the result.	

This test report may be reproduced in full only. The document may only be updated by Audix Technology Corp. personnel. Any changes will be noted in the Document History section of the report.

Audix Technology Corp.
No. 491, Zhongfu Rd., Linkou Dist.,
New Taipei City244,Taiwan
Tel: +886 2 26099301
Fax: +886 2 26099303

3. GENERAL INFORMATION

The EUT's information described in this section are all provided by the applicant.

3.1. Description of Application

Applicant	Sony Group Corporation 1-7-1 Konan Minato-ku Tokyo, 108-0075 Japan
Manufacturer	Sony Group Corporation 1-7-1 Konan Minato-ku Tokyo, 108-0075 Japan
Product	Digital Media Player
Brand	SONY
Model	YY1305B

This test report may be reproduced in full only. The document may only be updated by Audix Technology Corp. personnel. Any changes will be noted in the Document History section of the report.

Audix Technology Corp.
No. 491, Zhongfu Rd., Linkou Dist.,
New Taipei City244,Taiwan
Tel: +886 2 26099301
Fax: +886 2 26099303

3.2. Description of EUT

<table>
<tr><td>Test Model</td><td>YY1305B</td></tr>
<tr><td>Serial Number</td><td>N/A</td></tr>
<tr><td>Software Version</td><td>N/A</td></tr>
<tr><td>Power Rating</td><td>DC 5V by Charging or DC 3.8V by Lithium Battery</td></tr>
<tr><td>RF Features</td><td>WLAN: 802.11 a/b/g/n/ac/ax
Bluetooth: BT and BLE</td></tr>
<tr><td>Transmit Type</td><td>
<table>
<tr><th colspan="2">2.4 GHz Bands</th></tr>
<tr><td>802.11b</td><td>1T1R</td></tr>
<tr><td>802.11g</td><td>1T1R</td></tr>
<tr><td>802.11n-HT20/40</td><td>1T1R</td></tr>
<tr><td>802.11ax-HE20/40</td><td>1T1R</td></tr>
<tr><td>BT/BLE</td><td>1T1R</td></tr>
<tr><th colspan="2">U-NII Bands</th></tr>
<tr><td>802.11a</td><td>1T1R</td></tr>
<tr><td>802.11n-HT20/40</td><td>1T1R</td></tr>
<tr><td>802.11ac-VHT20/40/80/160</td><td>1T1R</td></tr>
<tr><td>802.11ax-HE20/40/80/160</td><td>1T1R</td></tr>
<tr><th colspan="2">WLAN 6E Bands</th></tr>
<tr><td>802.11ax-HE20/40/80/160</td><td>1T1R</td></tr>
</table>
</td></tr>
<tr><td>Device Category</td><td>☐Outdoor Access Point
☐Fixed point-to-point Access Point
☐Indoor Access Point
■Mobile and Portable client device</td></tr>
<tr><td>Sample Status</td><td>Trial sample</td></tr>
<tr><td>Test Sample</td><td>
<table>
<tr><th>Sample No.</th><th>Test Item</th><th>Firmware</th></tr>
<tr><td>02</td><td>DFS</td><td>N/A</td></tr>
</table>
</td></tr>
<tr><td>Date of Receipt</td><td>2026. 05. 29</td></tr>
<tr><td>Date of Test</td><td>2026. 10. 14 ~ 15</td></tr>
<tr><td>Interface Ports of EUT</td><td>• USB-C Port x 1
• Micro SD Slot x 1
• 3.5mm headphone jack x 1
• 4.4mm headphone jack x1</td></tr>
<tr><td>Accessories Supplied</td><td>• USB-C Cable: Detached, 0.5m</td></tr>
</table>

Note: Pursuant ISO 17025:2017 section 7.8.2, Audix Technology Corp. does not assume responsibility for all EUT's information including RF features, transmit type, antenna information…etc are provided by customer.

This test report may be reproduced in full only. The document may only be updated by Audix Technology Corp. personnel. Any changes will be noted in the Document History section of the report.

Audix Technology Corp.
No. 491, Zhongfu Rd., Linkou Dist.,
New Taipei City244,Taiwan
Tel: +886 2 26099301
Fax: +886 2 26099303

3.3. Reference Test Guidance

KDB 905462 D02 U-NII DFS Compliance Procedures New Rules v02
KDB 905462 D03 U-NII Clients Without Radar Detection New Rules v01r02

3.4. Antenna Information

No.	Manufacture	Antenna Model	Antenna Type	Frequency (MHz)	Max Gain(dBi)
1	PEGATRON & INPAQ	YY1305B	PIFA	2400-2500	3.13
				5150-5250	0.10
				5250-5350	0.10
				5470-5725	0.20
				5725-5850	0.81
				5925-6425	1.25
				6425-6525	0.87
				6525-6875	1.15
				6875-7125	0.49

Note: The antenna is compliance with FCC Part 15 Section § 15.203 requirement.

This test report may be reproduced in full only. The document may only be updated by Audix Technology Corp. personnel. Any changes will be noted in the Document History section of the report.

Audix Technology Corp.
No. 491, Zhongfu Rd., Linkou Dist.,
New Taipei City244,Taiwan
Tel: +886 2 26099301
Fax: +886 2 26099303

3.5. EUT Specifications Assessed in Current Report

Mode	U-NII Band	Fundamental Range (MHz)	Channel Number
802.11a	2A	5260-5320	4
	2C	5500-5720	9
802.11n-HT20 802.11ac-VHT20 802.11ax-HE20	2A	5260-5320	4
	2C	5500-5720	9
802.11n-HT40 802.11ac-VHT40 802.11ax-HE40	2A	5270-5310	2
	2C	5510-5710	4
802.11ac-VHT80 802.11ax-HE80	2A	5290	1
	2C	5530-5690	2
802.11ac-VHT160 802.11ax-HE160	2A	5250	1
Remark: U-NII Band 2A and 2C (DFS Function, Slave/no In service monitor, no Ad-Hoc mode)			

Mode	Modulation	Data Rate (Mbps)
802.11a	OFDM (BPSK/QPSK/16QAM/64QAM)	Up to 54
802.11n-HT20		Up to 72.2
802.11n-HT40		Up to 150
802.11ac-VHT20	OFDM (BPSK/QPSK/16QAM/64QAM/256QAM)	Up to 86.7
802.11ac-VHT40		Up to 200
802.11ac-VHT80		Up to 433.3
802.11ac-VHT160		Up to 866.7
802.11ax-HE20	OFDMA (BPSK/ QPSK/ 16QAM/ 64QAM/ 256QAM/ 1024QAM)	Up to 143.5
802.11ax-HE40		Up to 287
802.11ax-HE80		Up to 600.5
802.11ax-HE160		Up to 1201

3.6. Description of Key Components

None

This test report may be reproduced in full only. The document may only be updated by Audix Technology Corp. personnel. Any changes will be noted in the Document History section of the report.

Audix Technology Corp.
No. 491, Zhongfu Rd., Linkou Dist.,
New Taipei City244,Taiwan
Tel: +886 2 26099301
Fax: +886 2 26099303

3.7. Test Configuration

Item	Bandwidth	Test Frequency
Channel Move Time& Channel Closing Transmission Time	160MHz	5250MHz
Non-Occupancy Period & Non-associated Test	160MHz	5250MHz

3.8. Tested Supporting System List

Item	Manufacturer	Model	Remark
AP Server	ASUS	RT-AX88U	FCC ID: MSQ-RTAXHP00

3.9. Description of Test Facility

Name of Test Firm	Audix Technology Corporation / EMC Department No. 491, Zhongfu Rd., Linkou Dist., New Taipei City 244, Taiwan Tel: +886-2-26092133 Fax: +886-2-26099303 Website : www.audixtech.com Contact e-mail: attemc_report@audixtech.com
Accreditations	The laboratory is accredited by following organizations under ISO/IEC 17025:2017 (1) NVLAP(USA) NVLAP Lab Code 200077-0 (2) TAF(Taiwan) No. 1724
Test Facilities	FCC OET Designation Number under APEC MRA by NCC is : TW1724 ISED CAB Identifier Number under APEC TEL MRA by NCC is TW1724 (1) RF Test Room

3.10.Measurement Uncertainty

Test Item	Uncertainty
DFS Measurement	±0.5ms
Threshold	±0.33dB

This test report may be reproduced in full only. The document may only be updated by Audix Technology Corp. personnel. Any changes will be noted in the Document History section of the report.

Audix Technology Corp.
No. 491, Zhongfu Rd., Linkou Dist.,
New Taipei City244,Taiwan
Tel: +886 2 26099301
Fax: +886 2 26099303

4. MEASUREMENT EQUIPMENTLIST

Item	Type	Manufacturer	Model No.	Serial No.	Cal. Date	Cal. Interval
1.	Vector Signal Generation	R&S	SMU200A	104893	2026.05.29	1 Year
2.	Spectrum Analyzer	R&S	FSV30	101181	2026.07.01	1 Year
3.	Atteuator (10dB) X2	Worken	WK0602-10	0120A02208001S	N.C.R	N.C.R
4.	Atteuator (30dB) X2	Worken	WK0602-30	0120A02208002S	N.C.R	N.C.R
5.	Digital Thermo-Hygro Meter	iMax	HTC-1	RF-03	2026.04.08	1 Year

This test report may be reproduced in full only. The document may only be updated by Audix Technology Corp. personnel. Any changes will be noted in the Document History section of the report.

Audix Technology Corp.
No. 491, Zhongfu Rd., Linkou Dist.,
New Taipei City244,Taiwan
Tel: +886 2 26099301
Fax: +886 2 26099303

5. WORKING MODES AND REQUIREMENT TEST ITEM

5.1. Applicability of DFS Requirements Prior to Use of a Channel

Requirement	Operational Mode		
	Master	Client Without Radar Detection	Client With Radar Detection
Non-Occupancy Period	Yes	Not required	Yes
DFS Detection Threshold	Yes	Not required	Yes
Channel Availability Check Time	Yes	Not required	Not required
U-NII Detection Bandwidth	Yes	Not required	Yes

5.2. Applicability of DFS Requirements during Normal Operation

Requirement	Operational Mode	
	Master Device or Client with Radar Detection	Client Without Radar Detection
DFS Detection Threshold	Yes	Not required
Channel Closing Transmission Time	Yes	Yes
Channel Move Time	Yes	Yes
U-NII Detection Bandwidth	Yes	Not required

Additional requirements for devices with multiple bandwidth modes	Operational Mode	
	Master Device or Client with Radar Detection	Client Without Radar Detection
U-NII Detection Bandwidth and Statistical Performance Check	All BW modes must be tested	Not required
Channel Move Time and Channel Closing Transmission Time	Test using widest BW mode available	Test using the widest BW mode available for the link
All other tests	Any single BW mode	Not required

This test report may be reproduced in full only. The document may only be updated by Audix Technology Corp. personnel. Any changes will be noted in the Document History section of the report.

Audix Technology Corp.
No. 491, Zhongfu Rd., Linkou Dist.,
New Taipei City244,Taiwan
Tel: +886 2 26099301
Fax: +886 2 26099303

6. DFS DETECTION THRESHOLOS AND RADAR TEST WAVEFORMS

6.1. Interference Threshold Value, Master or Client Incorporating In-Service Monitoring

Maximum Transmit Power	Value (See Notes 1 and 2)
≥ 200 milliwatt	-64dBm
< 200 milliwatt	-62dBm

Note 1: This is the level at the input of the receiver assuming a 0 dBi receive antenna.

Note 2: Throughout these test procedures an additional 1 dB has been added to the amplitude of the test transmission waveforms to account for variations in measurement equipment. This will ensure that the test signal is at or above the detection threshold level to trigger a DFS response.

The radar Detection Threshold, lowest antenna gain is the parameter of interference radar DFS detection threshold.

6.2. Radar Test Waveform Minimum Step

Step intervals of 0.1 microsecond for Pulse Width, 1 microsecond for PRI, 1MHz for chirp width and 1 for the number of pulses will be utilized for the random determination of specific test waveforms.

This test report may be reproduced in full only. The document may only be updated by Audix Technology Corp. personnel. Any changes will be noted in the Document History section of the report.

Audix Technology Corp.
No. 491, Zhongfu Rd., Linkou Dist.,
New Taipei City244,Taiwan

Tel: +886 2 26099301
Fax: +886 2 26099303

6.3. Short Pulse Radar Test Waveforms

Radar Type	Pulse Width (µsec)	PRI (µsec)	Number of Pulse	Minimum Percentage of Successful Detection	Minimum number of Trials
0	1	1428	18	See Note 1	See Note 1
1A	1	15 unique PRI in KDB 905462 D02 Table 5a	$Roundup\left\{\left(\frac{1}{360}\right)\times\left(\frac{19\times10^6}{PRI}\right)\right\}$	60%	15
1B	1	15 unique PRI within 518-3066, Excluding 1A PRI		60%	15
2	1-5	150-230	23-29	60%	30
3	6-10	200-500	16-18	60%	30
4	11-20	200-500	12-16	60%	30
Aggregate (Radar Types 1-4)				80%	120
Note 1: Short Pulse Radar Type 0 should be used for the detection bandwidth test, channel move time, and channel closing time tests.					

A minimum of 30 unique waveforms are required for each of the short pulse radar types 2 through 4. For short pulse radar type 1, the same waveform is used a minimum of 30 times. If more than 30 waveforms are used for short pulse radar types 2 through 4, then each additional waveform must also be unique and not repeated from the previous waveforms. The aggregate is the average of the percentage of successful detections of short pulse radar types 1-4.

FCC Radar Types (1~4) System Diagram

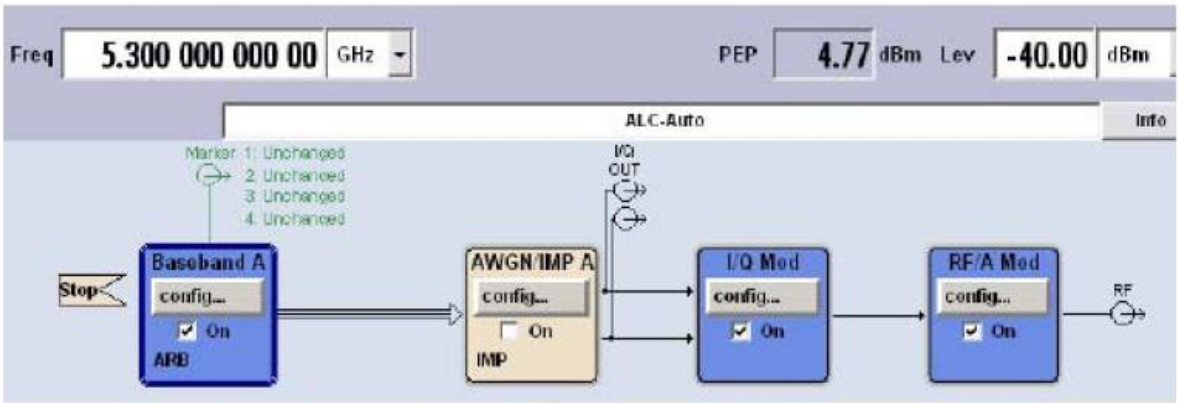

Used R&S SMU200A (Vector SG with two ARB)
B11: Base-band Generator with ARB (16M samples) and Digital Modulation
B13: Base-band Main Module
B106: frequency range (100 kHz to 6 GHz)
For selecting the waveform parameters from within the bounds of the signal type, system was random selection using uniform distribution.

This test report may be reproduced in full only. The document may only be updated by Audix Technology Corp. personnel. Any changes will be noted in the Document History section of the report.

Audix Technology Corp.
No. 491, Zhongfu Rd., Linkou Dist.,
New Taipei City244,Taiwan
Tel: +886 2 26099301
Fax: +886 2 26099303

6.4. Long Pulse Radar Test Waveforms

Radar Type	Pulse Width (µsec)	Chirp Width (MHz)	PRI (µsec)	Number of Pulse Per Burst	Number of Bursts	Minimum Percentage of Successful Detection	Minimum of Trials
5	50-100	5-20	1000-2000	1-3	8-20	80%	30

The parameters for this waveform are randomly chosen. Thirty unique waveforms are required for the Long Pulse radar test signal. If more 30 waveforms are used for the Long Pulse radar test signal, then each additional waveform must also be unique and not repeated from the previous waveforms. Each waveform is defined as following:

(1) The transmission period for the Long Pulse Radar test signal is 12 seconds.

(2) There are a total of 8 to 20 Bursts in the 12 second period, with the number of Bursts being randomly chosen. This number is Burst_Count.

(3) Each Burst consists of 1 to 3 pulses, with the number of pulses being randomly chosen. Each Burst within the 12 second sequence may have a different number of pulses.

(4) The pulse width is between 50 and 100 microseconds, with the pulse width being randomly chosen. Each pulse within a Burst will have the some pulse width. Pulses in different Bursts may have different pulse widths.

(5) Each pulse has a linear FM chirp between 5 and 20MHz, with the chirp width being randomly chosen. Each pulse within a Burst will have the same chirp width. Pulses in different Burst may have different chirp widths. The chirp is centered on the pulse. For example, with a radar frequency of 5300MHz and a 20MHz chirped signal, the chirp starts at 5290MHz and ends at 5310MHz.

(6) If more than one pulse is present in a Burst, the time between the pulses will be between 1000 and 2000 microseconds, with the time being randomly chosen. If three pulses are present in a Burst, the time between the first and second pulses is chosen independently of the time between the second and third pulses.

(7) The 12 second transmission period is divided into even intervals. The number of intervals is equal to Burst_Count. Each interval is of length (12000000/Burst_Count) microseconds. Each interval contains one Burst. The start time for the Burst, relative to the beginning of the interval, is between 1 and [(12000000/Burst_Count)-(Total Burst length)+(One Random PRI interval)] microseconds, with the start time being randomly chosen. The step interval for the start time is 1 microsecond. The start time for each Burst is chosen independently.

This test report may be reproduced in full only. The document may only be updated by Audix Technology Corp. personnel. Any changes will be noted in the Document History section of the report.

Audix Technology Corp.
No. 491, Zhongfu Rd., Linkou Dist.,
New Taipei City244,Taiwan
Tel: +886 2 26099301
Fax: +886 2 26099303

A representative example of a Long Pulse radar test waveform:

(1) The total test signal length is 12 seconds.

(2) 8 Bursts are randomly generated for the Burst_Count.

(3) Burst 1 has 2 randomly generated pulses.

(4) The pulse width (for both pulses) is randomly selected to be 75 microseconds.

(5) The PRI is randomly selected to be at 1213 microseconds.

(6) Bursts 2 through 8 are generated using steps 3-5.

(7) Each Burst is contained in even intervals of 1500000 microseconds. The starting location for Pulse 1. Burst 1 is randomly generated (1 to 1500000 minus the total Burst 1 length + 1 random PRI interval) at the 325001 microsecond step. Bursts 2 through 8 randomly fall in successive 1500000 microsecond intervals (i.e. Burst 2 falls in the 1500001-3000000 microsecond range).

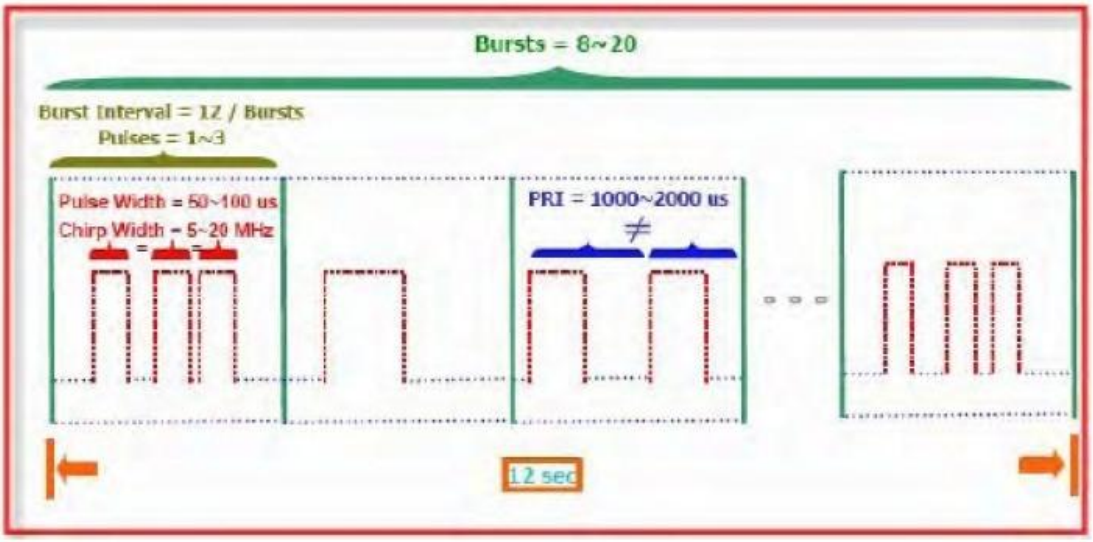

This test report may be reproduced in full only. The document may only be updated by Audix Technology Corp. personnel. Any changes will be noted in the Document History section of the report.

Audix Technology Corp.
No. 491, Zhongfu Rd., Linkou Dist.,
New Taipei City244,Taiwan

Tel: +886 2 26099301
Fax: +886 2 26099303

FCC Radar Types (5) System Diagram

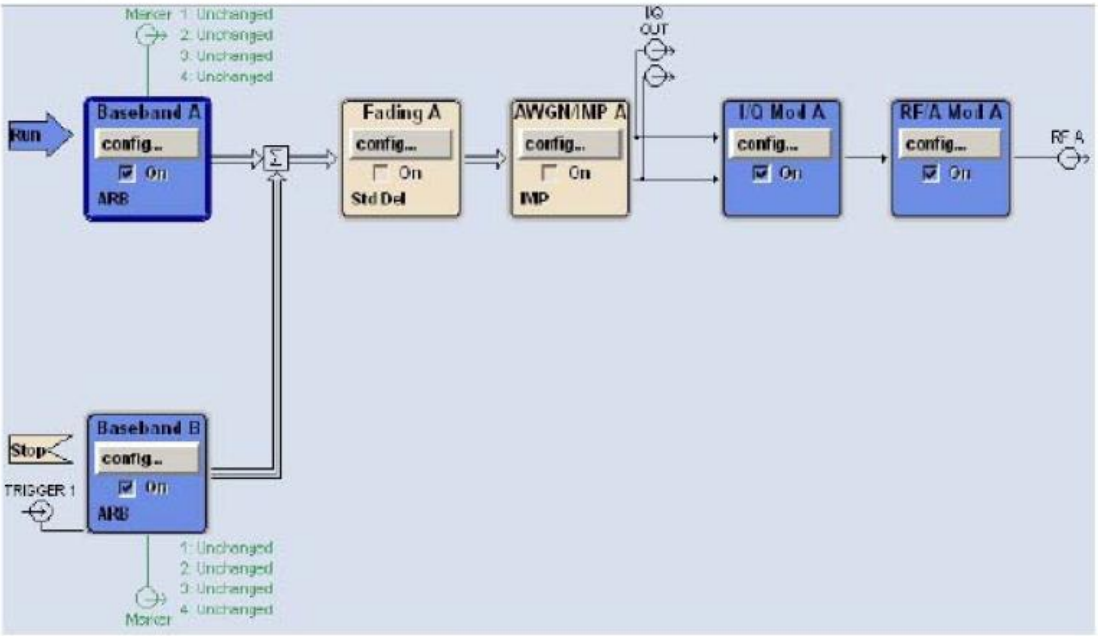

Used R&S SMU200A (Vector SG with two ARB)

Path A/Path B Two B11: Base-band Generator with ARB (16M samples) and Digital Modulation

B13: Base-band Main Module

B106: frequency range (100 kHz to 6 GHz)

For selecting the waveform parameters from within the bounds of the signal type, system was random selection using uniform distribution.

6.5. Frequency Hopping Pulse Radar Test Waveforms

Radar Type	Pulse Width (µsec)	PRI (µsec)	Pulses Per Hop	Hopping Rate (kHz)	Hopping Sequence Length (ms)	Minimum Percentage of Successful Detection	Minimum of Trials
6	1	333	9	0.333	300	70%	30

For the Frequency Hopping Radar Type, the same Burst parameters are used for each waveform. The hopping sequence is different for each waveform and a 100-length segment is selected from the hopping sequence defined by the following algorithm:

The first frequency in a hopping sequence is selected randomly from the group of 475 integer frequencies form 5250-5274MHz. Next, the frequency that was just chosen is removed from the group and a frequency is randomly selected from the remaining 474 frequencies in the group. This process continues until all 475 frequencies are chosen for the set. For selection of random frequency, the frequencies remaining within the group are always treated as equally likely.

This test report may be reproduced in full only. The document may only be updated by Audix Technology Corp. personnel. Any changes will be noted in the Document History section of the report.

Audix Technology Corp.
No. 491, Zhongfu Rd., Linkou Dist.,
New Taipei City244,Taiwan

Tel: +886 2 26099301
Fax: +886 2 26099303

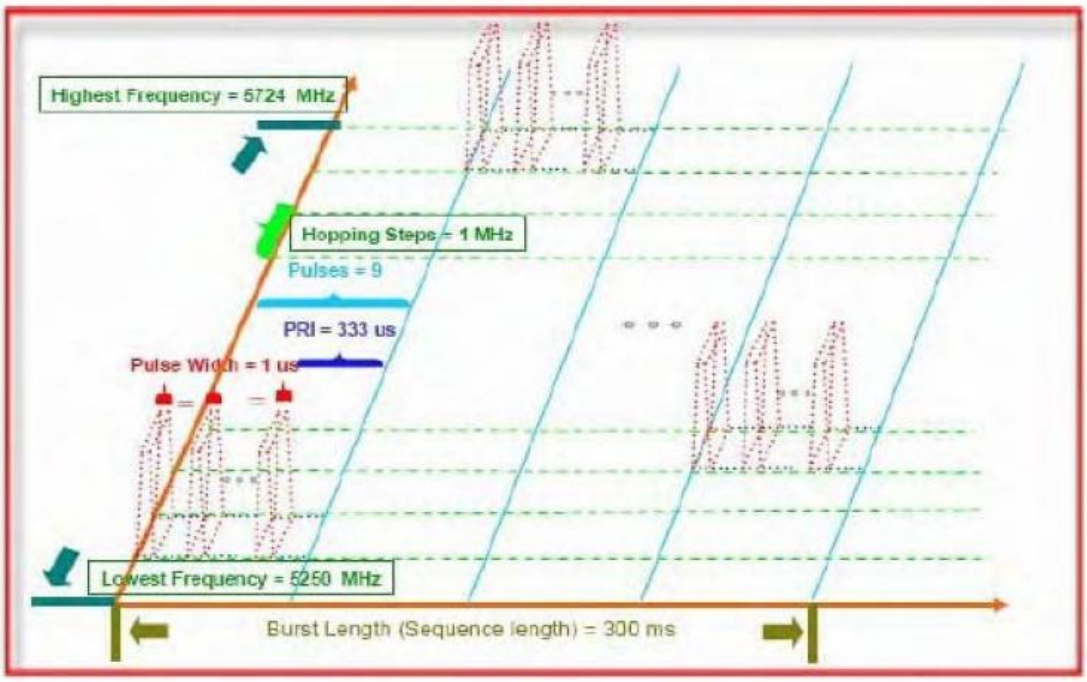

FCC Radar Types (6) System Diagram

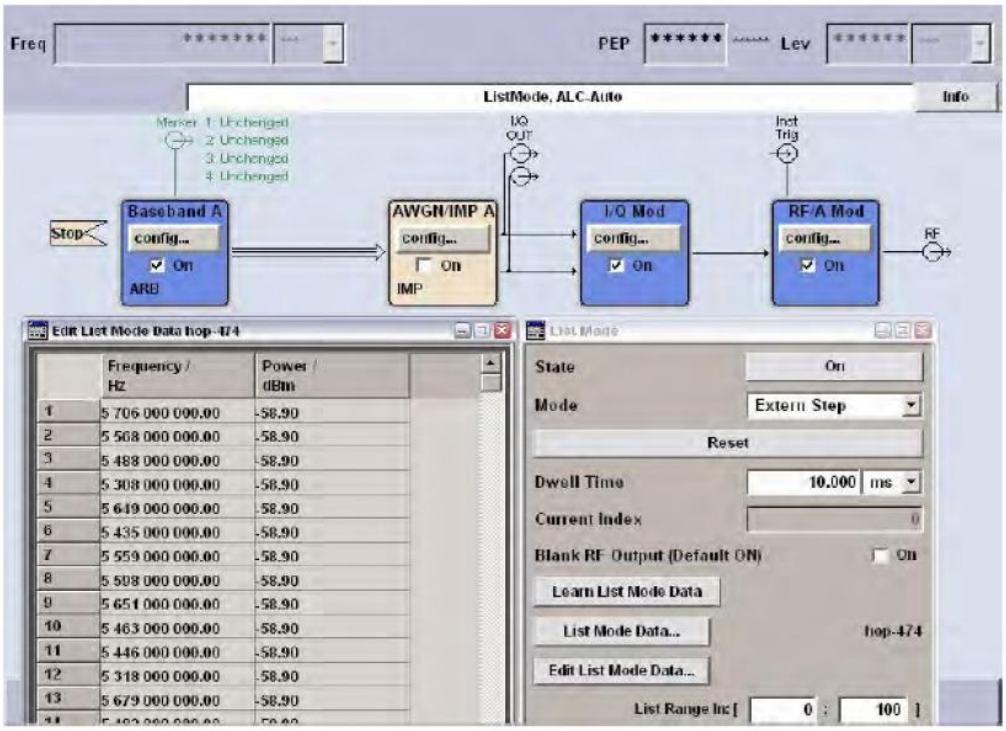

Used R&S SMU200A (Vector SG with two ARB)
B11: Base-band Generator with ARB (16M samples) and Digital Modulation
B13: Base-band Main Module
B106: frequency range (100 kHz to 6 GHz)
For selecting the waveform parameters from within the bounds of the signal type, system was random selection using uniform distribution.

This test report may be reproduced in full only. The document may only be updated by Audix Technology Corp. personnel. Any changes will be noted in the Document History section of the report.

Audix Technology Corp.
No. 491, Zhongfu Rd., Linkou Dist.,
New Taipei City244,Taiwan

Tel: +886 2 26099301
Fax: +886 2 26099303

6.6. Conducted Calibration Setup

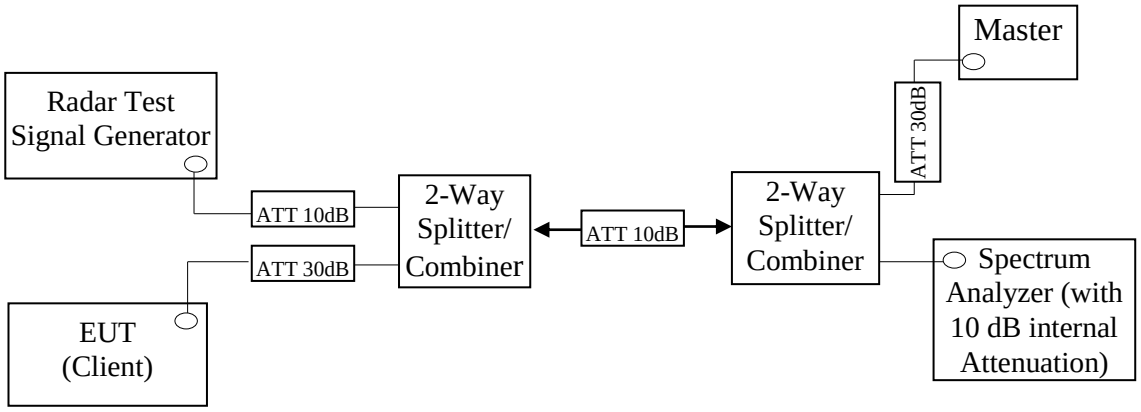

6.7. Radar Waveform Calibration Procedure

The measured frequency is 5250MHz. The radar signal was the same as transmitted channels, and injected into the antenna port of AP (master) or Client Device with Radar Detection, measured the channel closing transmission time and channel move time. The calibrated conducted detection threshold level is set to -62dBm. The tested level is lower than required level hence it provides margin to the limit.

6.8. Calibration Deviation

There is no deviation with the original standard.

This test report may be reproduced in full only. The document may only be updated by Audix Technology Corp. personnel. Any changes will be noted in the Document History section of the report.

Audix Technology Corp.
No. 491, Zhongfu Rd., Linkou Dist.,
New Taipei City244,Taiwan

Tel: +886 2 26099301
Fax: +886 2 26099303

6.9. Radar Waveform Calibration Result

DFS detection threshold level and the burst of pulses on the Channel frequency

Test Date	2026/10/14	Temp./Hum.	24℃/51%

160MHz

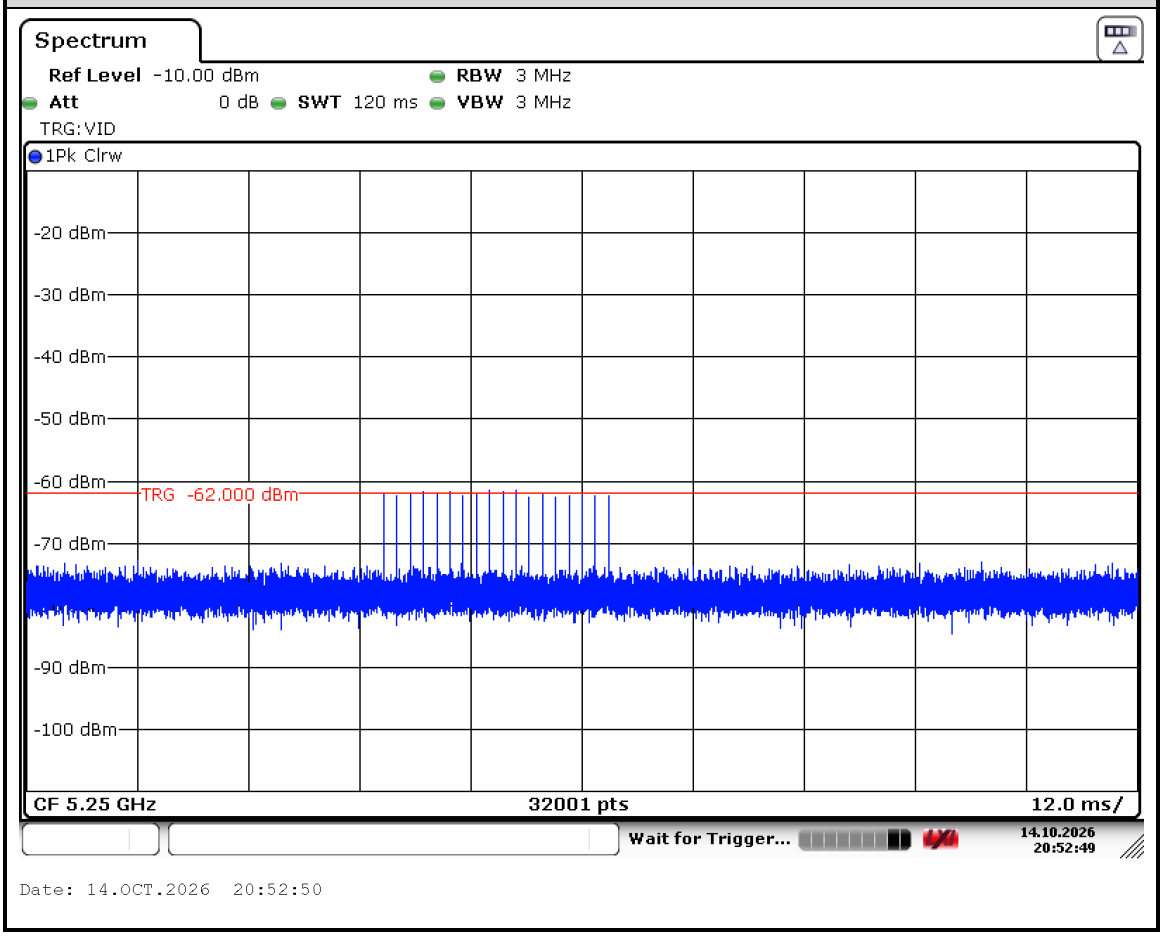

This test report may be reproduced in full only. The document may only be updated by Audix Technology Corp. personnel. Any changes will be noted in the Document History section of the report.

Audix Technology Corp.
No. 491, Zhongfu Rd., Linkou Dist.,
New Taipei City244,Taiwan

Tel: +886 2 26099301
Fax: +886 2 26099303

7. TEST SETUP AND TEST RESULT

7.1. Test Setup

7.1.1. Test Setup Diagram

Following is the test setup for generated the radar waveforms and used to monitor U-NII device.

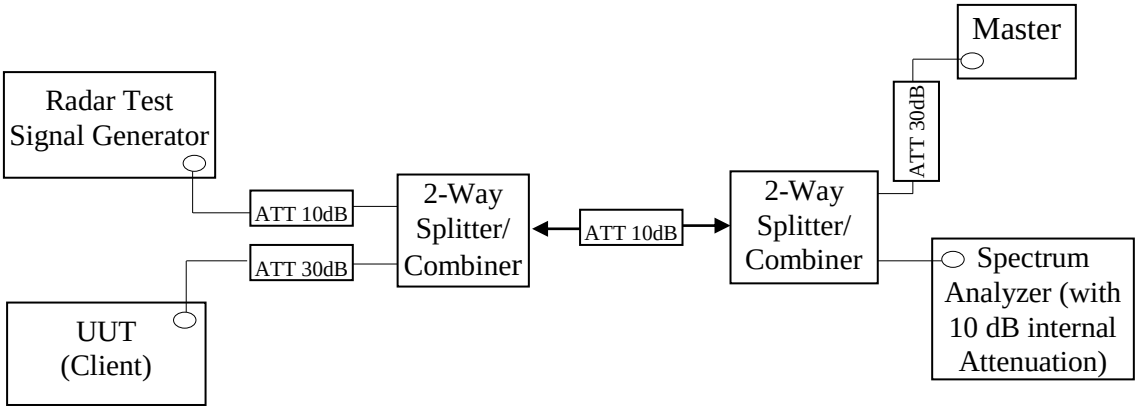

7.1.2. Test Setup Operation

System testing was performed with the designated MPEG test file that streams full motion video from the Access Point to Client in full motion video mode using the media player with the V2.61 Codec package. This file is used by IP and Frame based systems for loading the test channel during the in-service compliance testing of the U-NII device.
The waveform parameters from within the bounds of the signal type are selected randomly using uniform distribution.
A spectrum analyzer is used as a monitor to verify that the EUT has vacated the Channel within the (Channel Closing Transmission Time and Channel Move Time, and does not transmit on a Channel during the Non-Occupancy Period after the detection and Channel move. It is also used to monitor EUT transmissions during the Channel Availability Check Time.

This test report may be reproduced in full only. The document may only be updated by Audix Technology Corp. personnel. Any changes will be noted in the Document History section of the report.

Audix Technology Corp.
No. 491, Zhongfu Rd., Linkou Dist.,
New Taipei City244,Taiwan

Tel: +886 2 26099301
Fax: +886 2 26099303

7.1.3. Test Setup for Data Traffic Plot

Test Date	2026/10/14	Temp./Hum.	24°C/51%

Test Mode: 802.11ax, 160MHz

TX 5250MHz

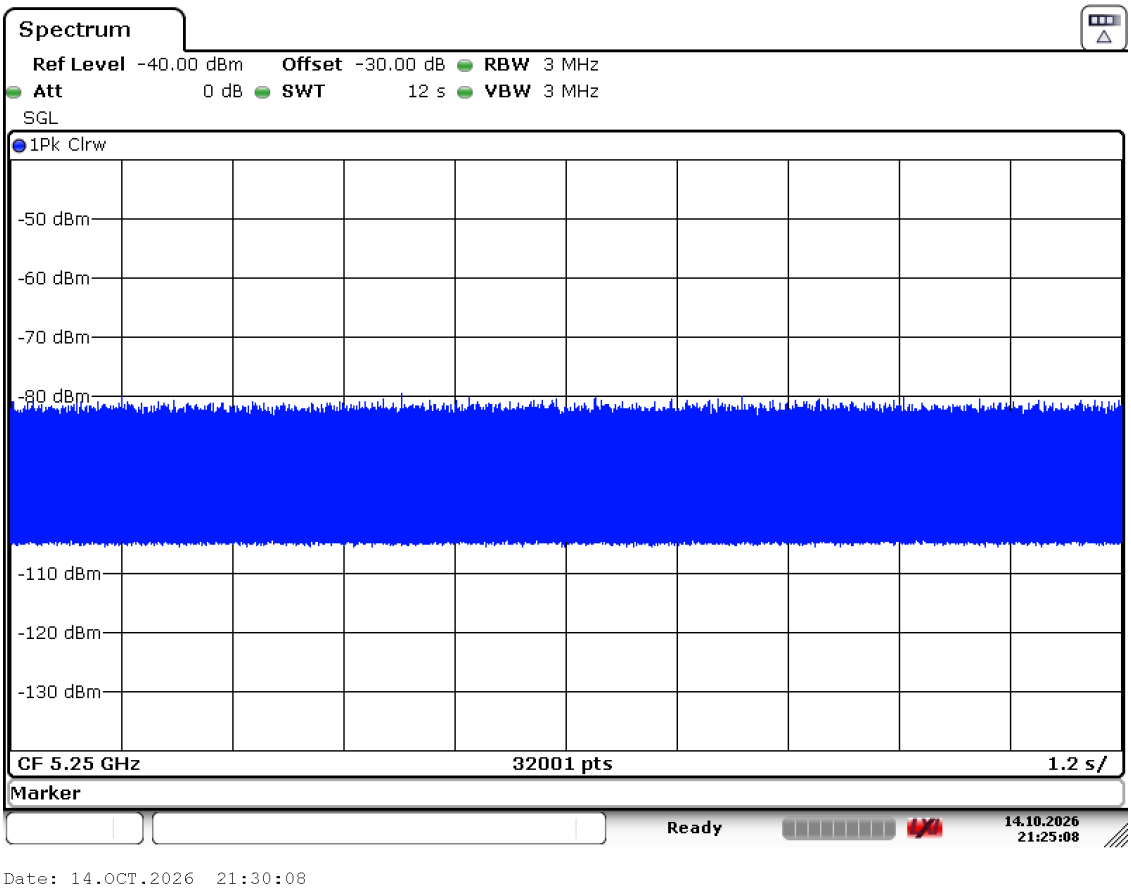

This test report may be reproduced in full only. The document may only be updated by Audix Technology Corp. personnel. Any changes will be noted in the Document History section of the report.

Audix Technology Corp.
No. 491, Zhongfu Rd., Linkou Dist.,
New Taipei City244,Taiwan
Tel: +886 2 26099301
Fax: +886 2 26099303

7.2. Channel Move Time, Channel Closing Transmission Time, Non-Occupancy Period, Non-Associated Client Beacon Measurement

7.2.1. Limit

Parameter	Value
Channel Move Time	10 seconds See Note 1.
Channel Closing Transmission Time	200 milliseconds + an aggregate of 60 milliseconds over remaining 10 second period. See Notes 1 and 2.
Non-Occupancy Period	Non-Occupancy Period time is 30 minute during which a Channel will not be utilized after a Radar Waveform is detected on that Channel
Non-Associated Client Beacon	The non-associated Client Beacon Test is during the 30 minutes observation time. The EUT should not make any transmissions in the DFS band after EUT power up.

Note 1: The instant that the Channel Move Time and the Channel Closing Transmission Time begins is as follows:

a. For the Short Pulse Radar Test Signals this instant is the end of the Burst.
b. For the Frequency Hopping radar Test Signal, this instant is the end of the last radar Burst generated.
c. For the Long Pulse Radar Test Signal this instant is the end of the 12 second period defining the Radar Waveform.

Note 2: The Channel Closing Transmission Time is comprised of 200 milliseconds starting at the beginning of the Channel Move Time plus any additional intermittent control signals required to facilitate a Channel move (an aggregate of 60 milliseconds) during the remainder of the 10 second period. The aggregate duration of control signals will not count quiet periods in between transmissions.

7.2.2. Test Procedures

- When a radar Burst with a level equal to the DFS Detection Threshold + 1dB is generated on the operating channel of the U-NII device. A U-NII device operating as a Client Device will associate with the Master of channel. Stream the MPEG test file from the Master Device to the Client Device on the selected channel for entire period of the test. At time to the radar waveform generator sends a Burst of pulses for each of the radar types at Detection Threshold + 1dB.
- Observe the transmissions of the EUT at the end of the radar Burst on the Operating channel. Measure and record the transmissions from the EUT during the observation time [Channel Move Time, Channel closing Time]. One 12 Second plot need to be reported for short Pulse Radar Types 0.
- Measure the EUT for more than 30 minutes following the channel close/move time to verify that the EUT does not resume only transmissions on this channel.

This test report may be reproduced in full only. The document may only be updated by Audix Technology Corp. personnel. Any changes will be noted in the Document History section of the report.

Audix Technology Corp.
No. 491, Zhongfu Rd., Linkou Dist.,
New Taipei City244,Taiwan

Tel: +886 2 26099301
Fax: +886 2 26099303

7.2.3. Test Result for Channel Closing Transmission Time& Channel Move Time

Test Date	2026/10/15	Temp./Hum.	22°C/56%
Test Mode	802.11ax, 160MHz	Frequency	TX 5250MHz
		Tested By	Harry Huang

Channel Closing Transmission Time	Channel move time < 10 S
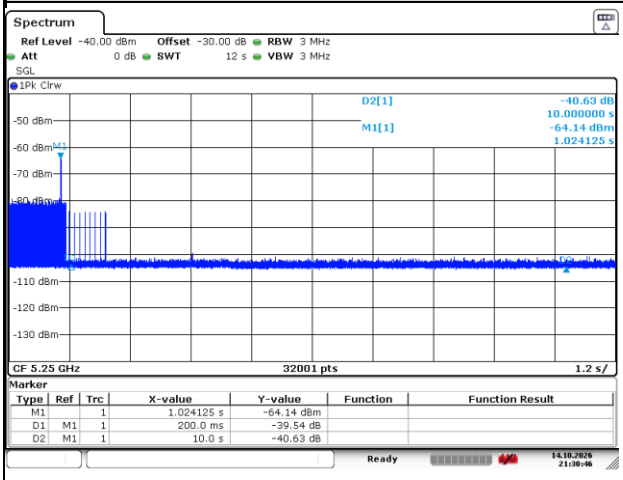	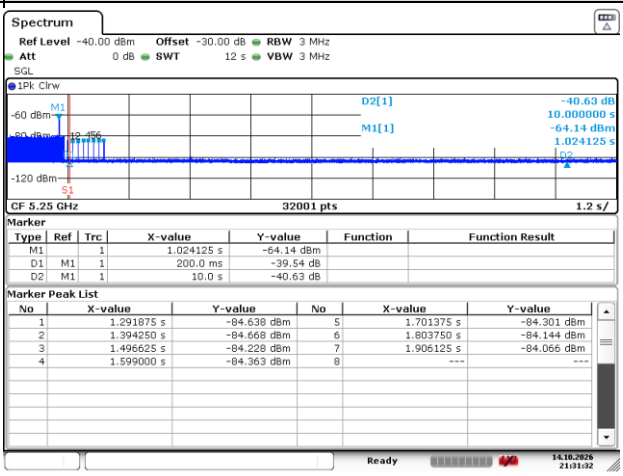

Channel Closing Transmission Time Calculated	
Sweep Time(S) sec	12
Sweep points (P)	32001
Number of Sweep points in 10 sec (N)	7
Channel Closing Transmission Time (C) ms	2.62
Detection Threshold Level (dBm)	-62.00

Channel closing time is calculated from C=N* dwell; where dwell is the occupancy time per sweep point calculated by the formula: dwell=S/P. N is the number of sweep points indicating transmission after S1; where S1 is the radar signal detected

This test report may be reproduced in full only. The document may only be updated by Audix Technology Corp. personnel. Any changes will be noted in the Document History section of the report.

Audix Technology Corp.
No. 491, Zhongfu Rd., Linkou Dist.,
New Taipei City244,Taiwan

Tel: +886 2 26099301
Fax: +886 2 26099303

7.2.4. Test Result for Non-Occupancy Period, Non-associated Test

Test Date	2026/10/14 ~ 15	Temp./Hum.	22 ~ 24°C/51 ~ 56%
Test Mode	802.11ax, 160MHz	Frequency	TX 5250MHz
		Tested By	Harry Huang

Non-Occupancy Period	Non-associated Test
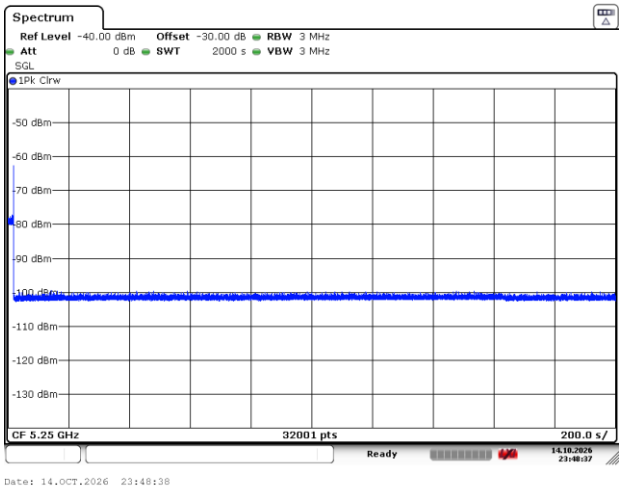	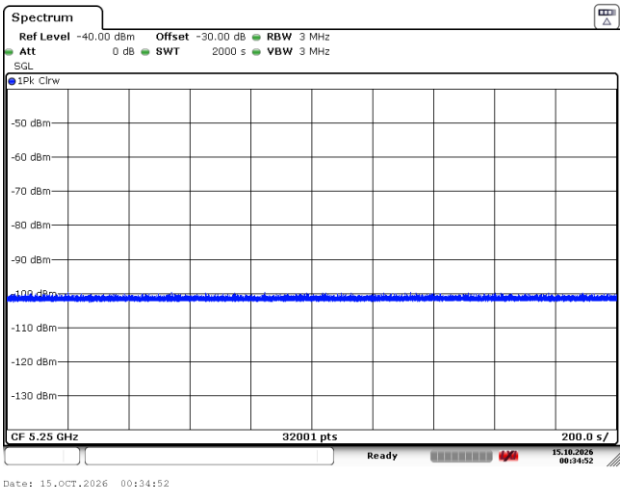

This test report may be reproduced in full only. The document may only be updated by Audix Technology Corp. personnel. Any changes will be noted in the Document History section of the report.

Audix Technology Corp.
No. 491, Zhongfu Rd., Linkou Dist.,
New Taipei City244,Taiwan

Tel: +886 2 26099301
Fax: +886 2 26099303

APPENDIX A

TEST PHOTOGRAPHS

(Model: YY1305B)

This test report may be reproduced in full only. The document may only be updated by Audix Technology Corp. personnel. Any changes will be noted in the Document History section of the report.