SAR TEST REPORT

Project No.	:	JB-Z1543
Client	:	Sony Group Corporation
Address	:	1-7-1 Konan Minato-ku Tokyo, 108-0075 Japan
Type of Equipment	:	Wireless Noise Canceling Stereo Headset
Model No.	:	YY3013
FCC ID	:	AK8YY3013
Regulation Applied	:	FCC 47 CFR 2.1093

SAR Limits :

Exposure Characteristics	SAR averaged over any 1 g of tissue
General Public Exposure	1.6 W/kg

The Highest Reported SAR :

RF Exposure Conditions	SAR
	Bluetooth
Body-Worn	0.087 W/kg

Test Result : Complied

Sample Receipt	:	April 8, 2026	
Testing	:	April 20, 2026 - April 22, 2026	(for conducted power measurements)
		April 27, 2026	(for SAR measurements)
Reported	:	May 29, 2026	

Reported by :

K. OHYAMA

Koji Ohyama
Technical Manager
EMC/ RF Test Laboratory Main Lab.
Design Technology Division
Sony Global Manufacturing & Operations Corporation

Approved Signatory :

Koji Hayama

Koji Hayama
Technical Manager
EMC/ RF Test Laboratory Main Lab.
Design Technology Division
Sony Global Manufacturing & Operations Corporation

Notice

* *These test results relate only to the items (combination equipment, test configuration, operation condition etc.) tested.*
* *This report shall not be reproduced except in full, without written approval of the laboratory.*
* *This report must not be used by the client to claim product endorsement by A2LA or any agency of the U.S. Government.*
* *Hereby certify that no party is subject to a denial of federal benefits pursuant to section 5301 of the Anti-Drug Abuse Act.*
* *All test results are traceable to the national and / or international standards.*
* *The testing in which "Non-accreditation" is displayed is outside the accreditation scopes in Sony Global Manufacturing & Operations Corporation EMC/ RF Test Laboratory.*

TESTING CERT #3203.01

Format No.:NV1-1-01 Version 5.0

REVISION HISTORY

Project No.	Revision	Page	Description	Issued date
JB-Z1543	Original	-	-	May 29, 2026

DISCLAIMER

This report includes the information provided by the customer as below;

- Cover page : Client and product related information
- Clause 1.1 : Description of Device Under Test (DUT)
- Clause 1.2 : Antenna Placement
- Clause 1.3 : Simultaneous Transmission Conditions
- Clause 1.4 : Nominal and Maximum Possible Power (Maximum Tune-up Tolerance Limit)

* The laboratory is not responsible for results affected by the above information.

Note(s)

☒-indicates that the listed condition, standard or equipment is applicable for this report.

☐-indicates that the listed condition, standard or equipment is not applicable for this report.

TABLE OF CONTENTS

1. General Information 4

1.1. Description of Device Under Test (DUT) 4

1.2. Antenna Placement 4

1.3. Nominal and Maximum Possible Power (Maximum Tune-up Tolerance Limit) 4

1.4. RF Exposure Conditions 5

1.5. RF Exposure Limits 5

1.6. SAR Test Exclusion 6

1.7. Test Specification, Methods and Procedures 7

1.8. Test Facilities and Accreditation 8

2. Test Set-up 9

2.1. Test Equipment and Measurement Software Lists 9

2.2. Measurement System Description 10

2.3. Measurement System Main Components 11

2.4. Tissue Simulating Liquids 14

2.5. SAR Measurement 15

2.6. Measurement Uncertainty 16

2.7. Dielectric Parameter Measurement of Tissue Simulating Liquids 18

2.8. System Check Measurement 20

3. Conducted Power Measurements 22

3.1. Conducted Power Measurement Results 22

4. SAR Measurement 23

4.1. SAR Measurement Results 24

Appendix A. Plots of SAR Measurement 25

Appendix B. Plots of System Check 27

Appendix C. Calibration Certificate 29

Appendix D. Photographs 62

1. General Information

1.1. Description of Device Under Test (DUT)

DUT Descriptions

Type of Equipment	Wireless Noise Canceling Stereo Headset
Model No.	YY3013
FCC ID	AK8YY3013
Test Sample Condition	☒ Prototype ☐ Pre-production ☐ Mass-production
	* Not for sale: The sample is equivalent to mass-production items. * No modification by the test lab.
Serial No.	1110478 (Demo)
Rating	DC 3.7 V (The EUT is supplied with the power from the internal battery) DC 5.0 V (The EUT is supplied with the power from the USB port) ☒ Not user accessible.
Body-Worn Accessories	n/a
Device Dimension (W x H x D)	See Appendix D
Device Category	Portable
Exposure Category	General population/ Uncontrolled environment

Wireless Technologies

Wireless Technologies	Frequency Bands	Operating Mode
Bluetooth	2.4 GHz	BR / EDR / LE

Radio Specification

Type of Equipment	Portable Transceiver
Antenna Type	Chip Antenna
Antenna Gain	+ 3.12 dBi

1.2. Antenna Placement

Antenna	Minimum Distance from Edges or Sides of DUT Platform (mm)					
	Front	Back	Left	Right	Top	Bottom
Bluetooth	2.6	26.6	15.6	41.3	30	26.1

* Please refer to Appendix D for more details.

1.3. Nominal and Maximum Possible Power (Maximum Tune-up Tolerance Limit)

Wireless Technologies	Mode	Band	Frequency Band (MHz)		Channel	Data Rate /MCS	Full Power (Burst Averaged)	Ant. Gain (dBi)	Effective Radiated Power (dBm) *1
			Lower	Higher			Max. Tune-up Limit (dBm)		
Bluetooth	BR	2.4 GHz	2402	2480	All	-	6.50	+3.12	+7.47
	EDR		2402	2480	All	-	5.50	+3.12	+6.47
	LE		2402	2480	All	-	3.00	+3.12	+3.97

*1 Effective Radiated Power (dBm) = Max. Tune-up Limit (dBm) + Ant. Gain (dBi) – 2.15 dB

1.4. RF Exposure Conditions

Wireless Technologies	RF Exposure Conditions	User-to-DUT Distance (mm)	Test Position	DUT-to-Ant. Distance (mm)	SAR to be Considered	Note(s)
Bluetooth	Body-Worn	0	Front	2.6	Yes	-
			Back	26.6	Yes	-
			Left	15.6	Yes	-
			Right	41.3	Yes	-
			Top	30	Yes	-
			Bottom	26.1	Yes	-

1.5. RF Exposure Limits

Human Exposure	General Population/ Uncontrolled Exposure	Occupational/ Controlled Exposure
Spatial Peak SAR (Head and Trunk) averaged over any 1 g of tissue	**1.6 W/kg***	8 W/kg
Spatial Average SAR (Whole Body) averaged over the whole body	0.08 W/kg	0.4 W/kg
Spatial Peak SAR (Limbs) averaged over any 10 g of tissue	4 W/kg	20 W/kg

* The limit(s) applied in this report.

1.6. SAR Test Exclusion

☒ SAR test exclusion is applied according to KDB 447498 D04.

The 1-g SAR test exclusion thresholds are based on SAR-based Exemption.

* SAR-based Exemption:

The SAR-based exemption formula of § 1.1307(b)(3)(i)(B) applies for single fixed, mobile, and portable RF sources with available maximum time-averaged power or effective radiated power (ERP), whichever is greater, of less than or equal to the threshold Pth (mW).

$$P_{\text{th}}\ (\text{mW}) = ERP_{20\ \text{cm}}\ (\text{mW}) = \begin{cases} 2040f & 0.3\ \text{GHz} \le f < 1.5\ \text{GHz} \\ 3060 & 1.5\ \text{GHz} \le f \le 6\ \text{GHz} \end{cases}$$

$$P_{\text{th}}\ (\text{mW}) = \begin{cases} ERP_{20\ \text{cm}}(d/20\ \text{cm})^x & d \le 20\ \text{cm} \\ ERP_{20\ \text{cm}} & 20\ \text{cm} < d \le 40\ \text{cm} \end{cases}$$

$$x = -\log_{10}\left(\frac{60}{ERP_{20\ \text{cm}}\sqrt{f}}\right)$$

where f is in GHz, d is the separation distance (cm).

Body-Worn SAR (1-g SAR) Test Exclusion as per KDB 447498 D04

Freq. Band	Freq. (MHz)	Test Position	DUT-to-Ant Distance (mm)	User-to-Ant Distance (mm)	Min. Test Sep. Distance (mm)	Max. Possible Power		ERP_{20cm} (mW)	P_{th} (mW)	SAR Required (> P_{th})	SAR Tested
						(dBm)	(mW)				
Bluetooth Classic	2450	Front	2.6	2.6	5	7.47	5.58	3060	2.7	Yes	Yes
	2450	Back	26.6	26.6	27	7.47	5.58	3060	67.8	No	No
	2450	Left	15.6	15.6	16	7.47	5.58	3060	25.1	No	No
	2450	Right	41.3	41.3	41	7.47	5.58	3060	150.2	No	No
	2450	Top	30	30	30	7.47	5.58	3060	82.9	No	No
	2450	Bottom	26.1	26.1	26	7.47	5.58	3060	63.1	No	No
Bluetooth LE	2450	Front	2.6	2.6	5	3.97	2.49	3060	2.7	No	Yes *1
	2450	Back	26.6	26.6	27	3.97	2.49	3060	67.8	No	No
	2450	Left	15.6	15.6	16	3.97	2.49	3060	25.1	No	No
	2450	Right	41.3	41.3	41	3.97	2.49	3060	150.2	No	No
	2450	Top	30	30	30	3.97	2.49	3060	82.9	No	No
	2450	Bottom	26.1	26.1	26	3.97	2.49	3060	63.1	No	No

*1 Tested because its maximum possible power is close to the exemption limit, or for the simultaneous transmission analysis

1.7. Test Specification, Methods and Procedures

Test Specification

☒	FCC 47 CFR 2.1093		Radiofrequency radiation exposure evaluation: portable devices

Test Methods

☒	IEEE Std 1528-2013		IEEE Recommended Practice for Determining the Peak Spatial-Average Specific Absorption Rate (SAR) in the Human Head from Wireless Communications Devices: Measurement Techniques
☒	IEC/IEEE 62209-1528: 2020		Measurement procedure for the assessment of specific absorption rate of human exposure to radio frequency fields from hand-held and body-mounted wireless communication devices –Part 1528: Human models, instrumentation, and procedures (Frequency range of 4 MHz to 10 GHz)
☐	KDB 248227 D01	v02r02	SAR Guidance for IEEE 802.11 (Wi-Fi) Transmitters
☐	KDB 447498 D01	v06	Mobile and Portable Devices RF Exposure Procedures and Equipment Authorization Policies
☐	KDB 447498 D02	v02r01	SAR Measurement Procedures for USB Dongle Transmitters
☒	KDB 447498 D04	v01	RF Exposure Procedures and Equipment Authorization Policies for Mobile and Portable Devices
☐	KDB 615223 D01	v01r01	802.16e/WiMax SAR Measurement Guidance
☐	KDB 616217 D04	v01r02	SAR Evaluation Considerations for Laptop, Notebook, Netbook and Tablet Computers
☐	KDB 648474 D03	v01r04	Evaluation and Approval Considerations for Handsets with Specific Wireless Charging Battery Covers
☐	KDB 648474 D04	v01r03	SAR Evaluation Considerations for Wireless Handsets
☒	KDB 865664 D01	v01r04	SAR Measurement Requirements for 100 MHz to 6 GHz
☐	KDB 941225 D01	v03r01	3G SAR Measurement Procedures
☐	KDB 941225 D05	v02r05	SAR Evaluation Considerations for LTE Devices
☐	KDB 941225 D06	v02r01	SAR Evaluation Procedures for Portable Devices with Wireless Router Capabilities
☐	KDB 941225 D07	v01r02	SAR Evaluation Procedures for UMPC Mini-Tablet Devices
☒	TCB Workshop (Oct. 2016)		RF Exposure Procedures; Bluetooth Duty Factor

Test Procedures

The SAR tests were performed according to the procedures of
Sony Global Manufacturing & Operations Corporation EMC/RF Test Laboratory,
the Document No. NV3-2 and NV3-16, available upon request.

☒ No deviation from the procedures

☐ Deviation from the procedures

☐ _____

References

[1] ICNIRP. Guidelines for limiting exposure to time-varying electric, magnetic, and electromagnetic fields (up to 300 GHz). Health Physics 74(4): 494-522, 1998.

[2] ICNIRP. Guidelines for limiting exposure to electromagnetic fields (100 kHz to 300 GHz). Health Physics 118(5): 483-524, 2020.

[3] American National Standards Institute (ANSI), "Safety Levels with Respect to Human Exposure to Radio Frequency Electromagnetic Fields, 3 kHz to 300 GHz," ANSI/IEEE C95.1-1992.

[4] Health Canada, "Limits of Human Exposure to Radiofrequency Electromagnetic Energy in the Frequency Range from 3 kHz to 300 GHz," Safety Code 6 (2015).

[5] Health Canada, "Notice: Localized human exposure limits for radiofrequency fields in the range of 6 GHz to 300 GHz," January 2021.

[6] European Council Recommendation 1999/519/EC of 12 July 1999 on the limitation of exposure of the general public to electromagnetic fields (0 Hz to 300 GHz) (Official Journal L 199 of 30 July 1999).

[7] REDCA Technical Guidance Note 20 (TGN 20), SAR Testing and Assessment Guidance, Version 6.5, October 2020.

[8] Australian Communications and Media Authority (ACMA), Radiocommunications Equipment (General) Rules 2021.

[9] Australian Radiation Protection and Nuclear Safety Agency (ARPANSA), "Standard for Limiting Exposure to Radiofrequency Fields – 100 kHz to 300 GHz, Radiation Protection Series S-1 (Rev. 1)," February 2021.

[10] Australian Radiation Protection and Nuclear Safety Agency (ARPANSA), RPS S-1 Advisory Note: Compliance of mobile or portable transmitting equipment (100 kHz to 300 GHz).

[11] Schmid & Partner Engineering AG (SPEAG), DASY52 System Handbook, April 2014.

[12] Schmid & Partner Engineering AG (SPEAG), DASY8 Module SAR System Handbook, September 2025.

[13] Schmid & Partner Engineering AG (SPEAG), DASY8 Module mmWave System Handbook, December 2022.

[14] Schmid & Partner Engineering AG (SPEAG), Safety Data Sheet, Doc No 772-SLAAx0yy-J, June 14, 2013.

[15] Schmid & Partner Engineering AG (SPEAG), Safety Data Sheet, Doc No 772-SLAAx1yy-I, October 18, 2013.

[16] Schmid & Partner Engineering AG (SPEAG), Safety Data Sheet, Doc No 772-SLAAx6yy-H, September 26, 2013.

[17] Schmid & Partner Engineering AG (SPEAG), Material Safety Data Sheet, Doc No 772-SLAAH502A-D, August 9, 2013.

[18] Schmid & Partner Engineering AG (SPEAG), Material Safety Data Sheet, Doc No 772-SLAAx4yy-J, August 9, 2013.

[19] Schmid & Partner Engineering AG (SPEAG), Material Safety Data Sheet, Doc No 772-SLAAHxU16B-C, June 9, 2015.

1.8. Test Facilities and Accreditation

Test Facilities

Test Facility Name	: Sony Global Manufacturing & Operations Corporation EMC/ RF Test Laboratory Main Lab.
Address	: 8-4 Shiomi Kisarazu-shi Chiba-ken, 292-0834, Japan
Shielded Room Used	: 4th Site Shielded Room 3

A2LA Accreditation

Certificate No.	: 3203.01
Expiration	: October 31, 2027

2. Test Set-up

2.1. Test Equipment and Measurement Software Lists

Table 2-1 Test Equipment List

Used	Control No.	Equipment Description	Model No.	Serial No.	Manufacturer	Cal. Int.	Last Cal.
☒	M5583	Robot	TX2-60L spe	F/24/0057614/A/002	Staubli	N/A	N/A *1
☐	W0082	Twin SAM Phantom	Twin SAM	TP-1325	SPEAG	N/A	N/A *1
☐	W0127	Twin SAM Phantom	Twin SAM	TP-1852	SPEAG	N/A	N/A *1
☒	W0119	ELI Phantom	ELI V5.0	1259	SPEAG	N/A	N/A *1
☒	WA0052	E-Field Probe	EX3DV4	7452	SPEAG	1Y	2026.03.20
☒	W0095	Data Acquisition Electronics	DAE4	482	SPEAG	1Y	2025.07.31
☒	WA0026	System Validation Dipole	D2450V2	936	SPEAG	1Y	2025.06.18
☒	W0121	Vector Reflectometer	DAKS_VNA R140	0111013	Copper Mountain Technologies	1Y	2025.10.03
☒	WA0029	Dielectric Probe	DAKS-3.5	1034	SPEAG	1Y	2025.08.11
☒	M1037	Signal Generator	N5173B	MY53270166	Agilent	1Y	2025.11.06
☒	M5582	Power Amp	RAMP01M22GA	00652106320	RF Lambda	N/A	N/A *1
☒	W0104	Power Sensor	U2021XA	MY54040006	Agilent	1Y	2025.11.06
☒	W0105	Power Sensor	U2021XA	MY54080005	Agilent	1Y	2025.11.06
☒	W0120	Directional Coupler	4226-20	-	narda	1Y	2025.10.10
☒	W0117	Attenuator	8493B 3 dB	MY39260857	Agilent	1Y	2025.10.05
☒	M5692	Attenuator	Coaxial Fixed 10 dB Attenuator	6610.19.AA	HUBER+SUHNER	1Y	2025.10.05
☒	W0148	Attenuator	AT-103 3 dB	980711	Hirose	1Y	2025.10.05
☐	WC0022	RF Cable	SUCOFLEX 106	503094/6	HUBER+SUHNER	1Y	2025.10.05
☒	WC0017	RF Cable	SUCOFLEX 104	253269/4	HUBER+SUHNER	1Y	2025.10.05
☒	WC0024	RF Cable	SUCOFLEX 126E	MY1150/26E	HUBER+SUHNER	1Y	2025.10.05
☒	CA5069	RF Cable	SUCOFLEX 104	35533/4	HUBER+SUHNER	1Y	2025.10.05
☒	CA5071	RF Cable	SUCOFLEX 104	37196/4	HUBER+SUHNER	1Y	2025.10.05
☐	M5313	Thermometer	608-H2	83132796	testo	2Y	2025.10.10
☒	M5062	Thermometer	0560 6220	39515563/802	testo	1Y	2025.10.09
☐	W0113	Water Thermometer	735-1	02788580	testo	1Y	Under Cal.
☒	W0116	Water Thermometer	735-1	02788596	testo	1Y	2025.05.20

Note(s):
* The calibration is valid until the end of the expiration month.
* 1 In-house verification is conducted periodically.

Table 2-2 Measurement Software List

Used	Control No.	Software Description	Model No.	Ver.	Manufacturer
☒	SW-5033	SAR measurement software	DASY8 Module SAR	V17.0.4.7034	SPEAG
☒	SW-0403	Dielectric measurement software	DAK	2.6.0.5	SPEAG
☒	SW-0406	SAR measurement spreadsheet	-	2.00	Main Lab.
☒	SW-5035	Power measurement software	Keysight BenchVue	2024	Keysight

2.2. Measurement System Description

The DASY8 system for SAR measurements consists of the following items:

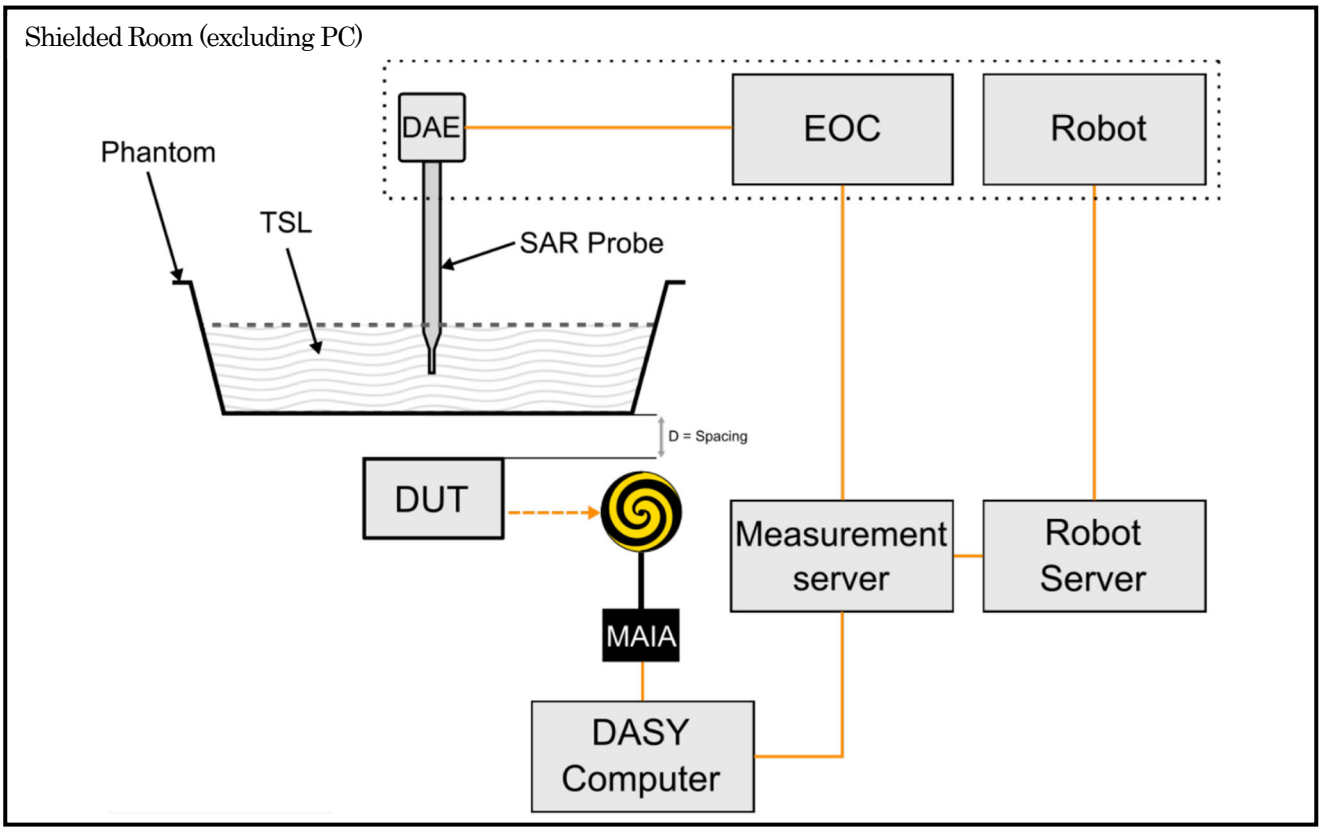

Figure 2-1 SAR Measurement System Description

- 6-axis robotic arm (Stäubli TX2-60L) for positioning the probe.
- Mounting Platform for keeping the phantoms at a fixed location relative to the robot.
- Measurement Server for handling all time-critical tasks, such as measurement data acquisition and supervision of safety features.
- EOC (Electrical to Optical Converter) for converting the optical signal from the DAE to electrical before being transmitted to the measurement server.
- LB (Light-Beam unit) for probe alignment (measurement of the exact probe length and eccentricity).
- SAR probe (EX3DV4 probes) for measuring the E-field distribution in the phantom. The SAR distribution and the psSAR (peak spatial averaged SAR) are derived from the E-field measurement.
- SAR phantom that represents a physical model with an equivalent human anatomy. A Specific Anthropomorphic Mannequin (SAM) head is usually used for handheld devices, and a Flat phantom is used for body-worn devices.
- TSL (Tissue Simulating Liquid) representing the dielectric properties of used tissue, e.g. Head Simulating Liquid, HSL.
- DAE (Data Acquisition Electronics) for reading the probe voltages and transmitting it to the DASY8 PC.
- Device Holder for positioning the DUT beneath the phantom.
- MAIA (Modulation and Interference Analyzer) for confirming the accuracy of the probe linearization parameters.
- Control PC for running the DASY8 software to define/execute the measurements.
- System validation kits for system check/validation purposes.

2.3. Measurement System Main Components

Robot (Positioner)

Manufacturer	Staubli SA
Model No.	TX2-60L
Number of Axis	6
Reach at Wrist	920 mm
Repeatability	+/- 0.03 mm
Nominal Load Capacity	2 kg
Maximum Load Capacity	3.7 kg
Control Unit	CS9c
Weight	52.9 kg

E-Field Probe

Manufacturer	Schmid & Partner Engineering AG (SPEAG)
Model No.	EX3DV4
Construction	Symmetrical design with triangular core Built-in shielding against static charges PEEK enclosure material (resistant to organic solvents, e.g., DGBE)
Frequency	4 MHz to 10 GHz Linearity: ± 0.2 dB (30 MHz to 10 GHz)
Directivity	± 0.1 dB in TSL (rotation around probe axis) ± 0.3 dB in TSL (rotation normal to probe axis)
Dynamic Range	10 µW/g to > 100 mW/g Linearity: ± 0.2 dB (noise: typically < 1 µW/g)
Dimensions	Overall length: 337 mm (Tip length: 20 mm) Tip diameter: 2.5 mm (Body diameter: 12 mm) Typical distance from probe tip to dipole centers: 1 mm

Data Acquisition Electronics (DAE)

Manufacturer	Schmid & Partner Engineering AG (SPEAG)
Model No.	DAE4
Construction	High precision 3-channel differential voltmeter for use with SPEAG's field, SAR probes. Serial optical link for communication with the DASY8 measurement server. Two-step probe touch detector for mechanical surface detection and emergency robot stop.
Measurement Range	-100 to +300 mV (16-bit resolution and two range settings: 4 mV, 400 mV)
Input Offset Voltage	< 5 µV (with auto zero)
Input Resistance	200 MΩ
Input Bias Current	< 50 fA
Battery Power	> 10 hours of operation (with two 9.6 V NiMH batteries)
Dimensions (L x W x H)	60 x 60 x 68 mm

DASY8 Measurement Server

Manufacturer	Schmid & Partner Engineering AG (SPEAG)
Model No.	DASY8 Measurement Server
Description	The DASY8 measurement server establishes the connection between the DASY8 PC and the robot.

Phantoms (Twin SAM Phantom)

Manufacturer	Schmid & Partner Engineering AG (SPEAG)
Model No.	Twin SAM
Description	The shell corresponds to the specifications of the Specific Anthropomorphic Mannequin (SAM) phantom defined in IEC/IEEE 62209-1528. It enables the dosimetric evaluation of left and right hand phone usage as well as body mounted usage at the flat phantom region. A cover prevents evaporation of the liquid. Reference markings on the phantom allow the complete setup of all predefined phantom positions and measurement grids by teaching three points with the robot. Twin SAM V5.0 has the same shell geometry and is manufactured from the same material as Twin SAM V4.0, but has reinforced top structure.
Material	Vinylester, glass fiber reinforced (VE-GF)
Liquid Compatibility	Compatible with all SPEAG tissue simulating liquids (sugar and oil based)
Shell Thickness	2 ± 0.2 mm (6 ± 0.2 mm at ear point)
Dimensions	Length: 1000 mm Width: 500 mm Height: adjustable feet
Filling Volume	Approx. 25 liters
Support	SPEAG standard-size platform slot

Phantoms (ELI Phantom)

Manufacturer	Schmid & Partner Engineering AG (SPEAG)
Model No.	ELI V5.0
Description	Phantom for compliance testing of handheld and body-mounted wireless devices in the frequency range of 4 MHz to 10 GHz. ELI is fully compatible with the IEC/IEC 62209-1528 standard and all known tissue simulating liquids. ELI has been optimized regarding its performance and can be integrated into our standard phantom tables. A cover prevents evaporation of the liquid. Reference markings on the phantom allow installation of the complete setup, including all predefined phantom positions and measurement grids, by teaching three points. The phantom is compatible with all SPEAG dosimetric probes and dipoles. ELI V5.0 has the same shell geometry and is manufactured from the same material as ELI4, but has reinforced top structure.
Material	Vinylester, glass fiber reinforced (VE-GF)
Liquid Compatibility	Compatible with all SPEAG tissue simulating liquids (sugar and oil based)
Shell Thickness	2.0 ± 0.2 mm (bottom plate)
Dimensions	Major axis: 600 mm Minor axis: 400 mm
Filling Volume	Approx. 30 liters
Support	SPEAG standard-size platform slot

Device Holder (Mounting Device for Hand-Held Transmitters)

Manufacturer	Schmid & Partner Engineering AG (SPEAG)
Model No.	MD4HHTV5
Description	In combination with the Twin SAM or ELI Phantoms, the Mounting Device for Hand-Held Transmitters enables rotation of the mounted transmitter device to specified spherical coordinates. At the heads, the rotation axis is at the ear opening. Transmitter devices can be easily and accurately positioned according to IEC 62209-1, IEEE 1528, FCC, or other specifications. The device holder can be locked for positioning at different phantom sections (left head, right head, flat).
Material	Polyoxymethylene (POM)

Device Holder (Mounting Device Adaptor for Ultra Wide Transmitters)

Manufacturer	Schmid & Partner Engineering AG (SPEAG)
Model No.	MDA4WTV5
Description	An upgrade kit to Mounting Device to enable easy mounting of wider devices like big smart-phones, e-books, small tablets, etc. It holds devices with width up to 140mm.
Material	Polyoxymethylene (POM)

Device Holder (Mounting Device Adaptor for Laptops)

Manufacturer	Schmid & Partner Engineering AG (SPEAG)
Model No.	MDA4LAP
Description	A simple but effective and easy-to-use extension for the Mounting Device; facilitates testing of larger devices according to IEC 62209-2 (e.g., laptops, cameras, etc.); lightweight and fits easily on the upper part of the Mounting Device in place of the phone positioner. The extension is fully compatible with the Twin SAM, ELI Phantoms.
Material	Polyoxymethylene (POM), PET-G, Foam

System Validation Dipole Kits

Manufacturer	Schmid & Partner Engineering AG (SPEAG)		
Model No.	D-Series		
Construction	Symmetrical dipole with l/4 balun Enables measurement of feedpoint impedance with NWA Matched for use near flat phantoms filled with tissue simulating solutions		
Frequency	2450 MHz, 5100 to 5800 MHz, and 6500 MHz		
Return Loss	> 20 dB at specified validation position		
Power Capability	> 100 W (f < 1 GHz); > 40 W (f > 1 GHz)		
Accessories	Distance holder, tripod adaptor, tripod		
Dimensions	Product	Dipole length	Overall height
	D2450V2	52.0 mm	290.0 mm
	D5GHzV2	20.6 mm	300.0 mm
	D6.5GHzV2	15.5 mm	296.0 mm

2.4. Tissue Simulating Liquids

Recipes for tissue simulating liquids manufactured by SPEAG

Ingredients (% by weight)	Frequency (MHz)					
	1900 to 3800		3500 to 5800		600 to 6000 / 10000	
Used	☐	☐	☐	☐	☒	☐
Tissue Simulating Liquids	HBBL 1900-3800 V3	MBBL 1900-3800 V3	HBBL 3500-5800 V5	MBBL 3500-5800 V5	HBBL 600-10000 V6	MBBL 600-6000 V6
Tissue Type	Head	Body	Head	Body	Head	Body
H_2O	50 – 73 %		50 – 65 %	60 – 80 %	–	
Non-ionic detergents	25 – 50 %		–	–	–	
NaCl	0 – 2 %		0 – 1.5 %	0 – 1.5 %	–	
Preventol-D7	0.05 – 0.1 %		–	–	–	
Ethanediol	–		–	–	< 5.2 %	
Sodium Petroleum Sulfonate	–		–	–	< 2.9 %	
Hexylene Glycol	–		–	–	< 2.9 %	
Alkoxylated Alcohol	–		–	–	< 2.0 %	
Mineral Oil	–		10 – 30 %	–	< 20 %	
Emulsifiers	–		8 – 25 %	20 – 40 %	–	

For the SAR measurement, the phantom must be filled with tissue simulating liquid to a depth of at least 15 cm.

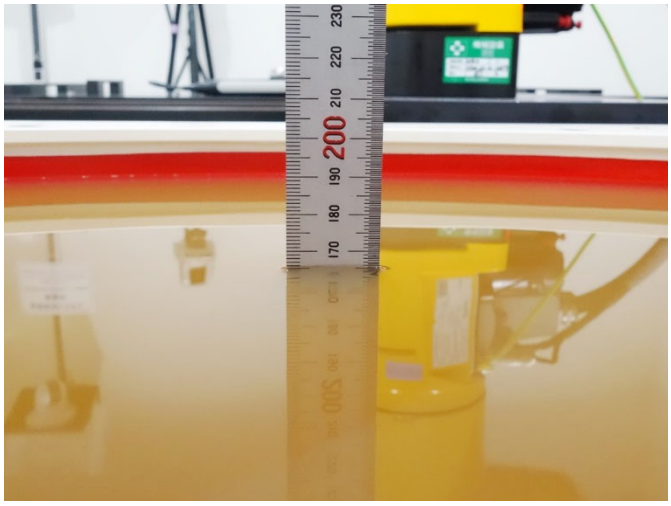

HBBL600-10000 V6

Figure 2-2 Photos: Liquid Depth (at the center of the flat phantom)

2.5. SAR Measurement

Step 1: Power Reference Measurement
Before an area scan and after the zoom scan, single point SAR measurements are performed at defined locations to estimate the SAR measurement drift due to device output power variations.

Step 2: Area Scan
An area scan is performed according to the requirements in Table 2-3.

Step 3: Zoom Scan
A zoom scan is performed according to the requirements in Table 2-3.

Step 4: Power Drift Measurement
Before an area scan and after the zoom scan, single point SAR measurements are performed at defined locations to estimate the SAR measurement drift due to device output power variations.

Table 2-3 Area Scan and Zoom Scan Parameters

			DUT Transmit Frequency being Tested		
			f ≤ 3 GHz	3 GHz < f ≤ 6 GHz	6 GHz < f ≤ 8.5 GHz
Maximum distance from closest measurement point (geometric center of probe sensors) to phantom surface			5 ± 1 mm	½ δ ln(2) ± 0.5 mm	½ δ ln(2) ± 0.5 mm
Maximum probe angle from probe axis to phantom surface normal at the measurement location			30° ± 1°	20° ± 1°	5° ± 1° (flat phantoms only) 20° ± 1° (other phantoms)
Maximum area scan spatial resolution: Δx_{Area}, Δy_{Area}			≤ 2 GHz: ≤ 15 mm 2 – 3 GHz: ≤ 12 mm	3 – 4 GHz: ≤ 12 mm 4 – 6 GHz: ≤ 10 mm	≤ 60 / f mm, or half of the corresponding zoom scan length, whichever is smaller
			When the x or y dimension of the test device, in the measurement plane orientation, is smaller than the above, the measurement resolution must be ≤ the corresponding x or y dimension of the test device with at least one measurement point on the test device.		
Maximum zoom scan spatial resolution: Δx_{Zoom}, Δy_{Zoom}			≤ 2 GHz: ≤ 8 mm 2 – 3 GHz: ≤ 5 mm	3 – 4 GHz: ≤ 5 mm 4 – 6 GHz: ≤ 4 mm	≤ 24 / f mm
Maximum zoom scan spatial resolution, normal to phantom surface	uniform grid: $\Delta z_{Zoom}(n)$		≤ 5 mm	3 – 4 GHz: ≤ 4 mm 4 – 5 GHz: ≤ 3 mm 5 – 6 GHz: ≤ 2 mm	≤ 10 / (f - 1) mm
	graded grid	$\Delta z_{Zoom}(1)$: between 1st two points closest to phantom surface	≤ 4 mm	3 – 4 GHz: ≤ 3 mm 4 – 5 GHz: ≤ 2.5 mm 5 – 6 GHz: ≤ 2 mm	≤ 12 / f mm
		$\Delta z_{Zoom}(n>1)$: between subsequent points	≤ 1.5 $\Delta z_{Zoom}(n-1)$		
Minimum zoom scan volume	x, y, z		≥ 30 mm	3 – 4 GHz: ≥ 28 mm 4 – 5 GHz: ≥ 25 mm 5 – 6 GHz: ≥ 22 mm	≥ 22 mm
Note: δ is the penetration depth of a plane-wave at normal incidence to the tissue medium.					

2.6. Measurement Uncertainty

☒ Table 2-4 DASY8 Uncertainty Budget for SAR Tests

For SAR Testing (IEC/IEEE 62209-1528:2020; SR3; DASY8, 0.3 GHz to 3 GHz)										
Symbol	Source of Uncertainty	Uncertainty of Xi			u(Xi)	Ci		Ciu(Xi)		Vi Veff
		Xi	Prob. Dist.	Div.		1g	10g	1g	10g	
Measurement System Errors										
CF	Probe Calibration	±11.0%	N (k=2)	2	±5.5%	1	1	±5.5%	±5.5%	∞
CF_{drift}	Probe Calibration Drift	±1.7%	R	1.73	±1.0%	1	1	±1.0%	±1.0%	∞
LIN	Probe Linearity	±4.7%	R	1.73	±2.7%	1	1	±2.7%	±2.7%	∞
BBS	Broadband Signal	±2.8%	R	1.73	±1.6%	1	1	±1.6%	±1.6%	∞
ISO	Probe Isotropy	±7.6%	R	1.73	±4.4%	1	1	±4.4%	±4.4%	∞
DAE	Other Probe + Electronic	±0.8%	N	1	±0.8%	1	1	±0.8%	±0.8%	∞
AMB	RF Ambient	±1.8%	N	1	±1.8%	1	1	±1.8%	±1.8%	∞
Δ_{xyz}	Probe Positioning	±0.006mm	N	1	±0.6%	0.14	0.14	±0.1%	±0.1%	∞
DAT	Data Processing	±1.2%	N	1	±1.2%	1	1	±1.2%	±1.2%	∞
Phantom and DUT Errors										
LIQ (σ)	Conductivity (meas.)	±2.5%	N	1	±2.5%	0.78	0.71	±2.0%	±1.8%	∞
LIQ (T_c)	Conductivity (temp.)	±3.3%	R	1.73	±1.9%	0.78	0.71	±1.5%	±1.4%	∞
EPS	Phantom Permittivity	±14.0%	R	1.73	±8.1%	0	0	±0.0%	±0.0%	∞
DIS	Distance DUT - TSL	±2.0%	N	1	±2.0%	2	2	±4.0%	±4.0%	∞
D_{xyz}	Positioning Repeatability	±1.0%	N	1	±1.0%	1	1	±1.0%	±1.0%	∞
H	Device Holder	±3.6%	N	1	±3.6%	1	1	±3.6%	±3.6%	7
MOD	DUT Modulation	±2.4%	R	1.73	±1.4%	1	1	±1.4%	±1.4%	∞
TAS	Time-averaged SAR	±1.7%	R	1.73	±1.0%	1	1	±1.0%	±1.0%	∞
RF_{drift}	DUT Drift	±2.9%	N	1	±2.9%	1	1	±2.9%	±2.9%	∞
Corrections to the SAR result										
C(ε', σ)	Deviation to Target	±1.9%	N	1	±1.9%	1	0.84	±1.9%	±1.6%	∞
C(R)	SAR Scaling	±0.0%	R	1.73	±0.0%	1	1	±0.0%	±0.0%	∞
u(ΔSAR)	Combined Standard Uncertainty			RSS				±10.8%	±10.7%	567
U	Expanded Uncertainty (95% conf. interval)			k=2				±21.6%	±21.4%	-

☒ Table 2-5 DASY8 Uncertainty Budget for SAR System Check

For SAR System Check (IEC/IEEE 62209-1528:2020; SR3; DASY8, 0.3 GHz to 6 GHz)										
Symbol	Source of Uncertainty	Uncertainty of Xi			u(Xi)	Ci		Ciu(Xi)		Vi Veff
		Xi	Prob. Dist.	Div.		1g	10g	1g	10g	
Measurement System Errors										
CF	Probe Calibration	±13.1%	N (k=2)	2	±6.6%	1	1	±6.6%	±6.6%	∞
CF_{drift}	Probe Calibration Drift	±1.7%	R	1.73	±1.0%	1	1	±1.0%	±1.0%	∞
LIN	Probe Linearity	±4.7%	R	1.73	±2.7%	1	1	±2.7%	±2.7%	∞
BBS	Broadband Signal	±0.0%	N (k=2)	2	±0.0%	1	1	±0.0%	±0.0%	∞
ISO	Probe Isotropy (axial)	±4.7%	R	1.73	±2.7%	1	1	±2.7%	±2.7%	∞
DAE	Other Probe + Electronic	±1.2%	N	1	±1.2%	1	1	±1.2%	±1.2%	∞
AMB	RF Ambient	±0.6%	N	1	±0.6%	1	1	±0.6%	±0.6%	∞
Δ_{xyz}	Probe Positioning	±0.005mm	N	1	±0.5%	0.29	0.29	±0.2%	±0.2%	∞
DAT	Data Processing	±0.6%	N	1	±0.6%	1	1	±0.6%	±0.6%	∞
Phantom and DUT Errors										
LIQ (σ)	Conductivity (meas.)	±2.5%	N	1	±2.5%	0.78	0.71	±2.0%	±1.8%	∞
LIQ (T_c)	Conductivity (temp.)	±3.4%	R	1.73	±1.9%	0.78	0.71	±1.5%	±1.4%	∞
EPS	Phantom Permittivity	±14.0%	R	1.73	±8.1%	0.25	0.25	±2.0%	±2.0%	∞
DIS	Distance DUT - TSL	±1.3%	N	1	±1.3%	2	2	±2.6%	±2.6%	∞
D_{xyz}	Positioning Repeatability	±1.2%	N	1	±1.2%	1	1	±1.2%	±1.2%	∞
MOD	DUT Modulation	±0.0%	R	1.73	±0.0%	1	1	±0.0%	±0.0%	∞
TAS	Time-averaged SAR	±0.0%	R	1.73	±0.0%	1	1	±0.0%	±0.0%	∞
VAL	Validation Antenna	±3.2%	N	1	±3.2%	1	1	±3.2%	±3.2%	∞
P_{in}	Accepted Power	±2.0%	N	1	±2.0%	1	1	±2.0%	±2.0%	∞
Corrections to the SAR result										
C(ε', σ)	Deviation to Target	±1.9%	N	1	±1.9%	1	0.84	±1.9%	±1.6%	∞
u(ΔSAR)	Combined Standard Uncertainty			RSS				±9.8%	±9.7%	∞
U	Expanded Uncertainty (95% conf. interval)			k =2				±19.7%	±19.5%	-

2.7. Dielectric Parameter Measurement of Tissue Simulating Liquids

The dielectric properties of the tissue simulating liquids used were verified within 24 hours before the SAR measurement.

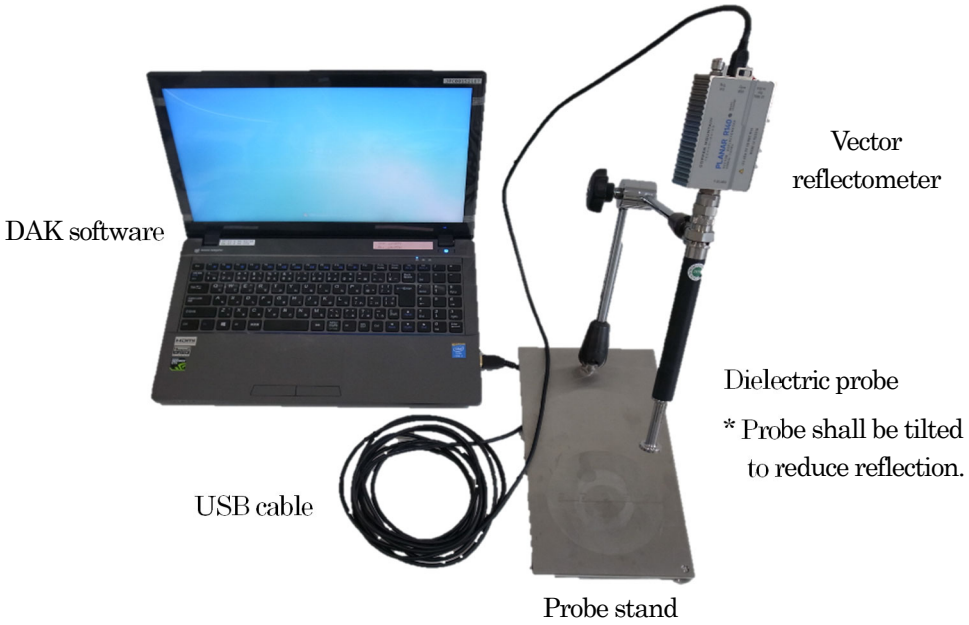

(a) Dielectric Parameter Measurement System

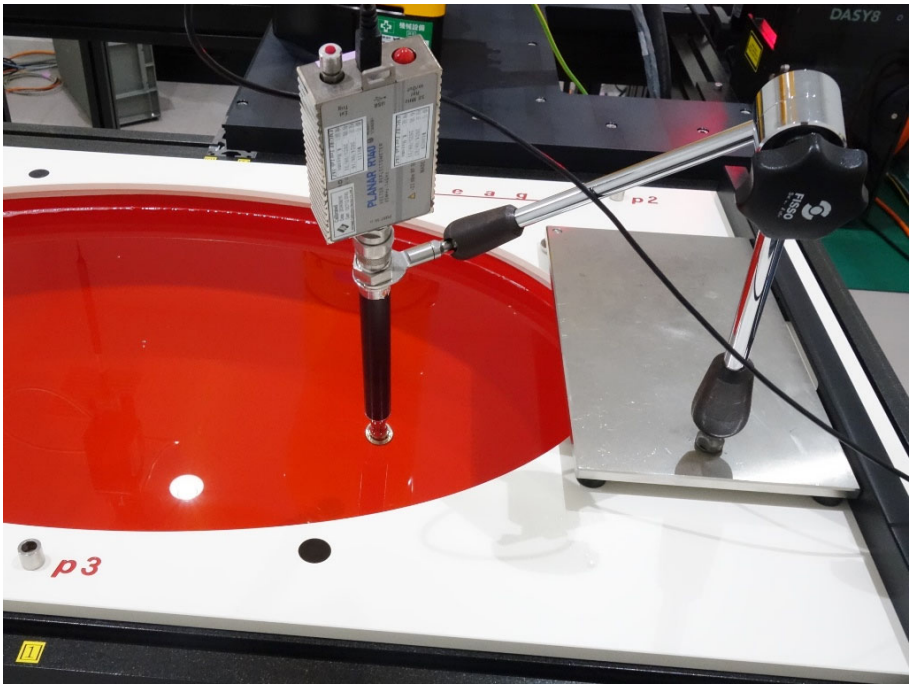

(b) Example Photo: Dielectric Parameter Measurement

Figure 2-3 Dielectric Parameter Measurement Set-up

4th Site Shielded Room 3

TSL	Freq. (MHz)	Param.	Target *1	Meas.	Dev. (%) *2	Date	Amb. Temp. (deg. C)	Rel. Hum. (%RH)	Liquid Temp. (deg. C)
HBBL 600-10000 V6	2402	ε_r	39.29	39.98	1.76	2026/04/27	21.6	60.1	20.0
		σ (S/m)	1.76	1.73	-1.70				
	2440	ε_r	39.22	39.92	1.78	2026/04/27	21.6	60.1	20.0
		σ (S/m)	1.79	1.76	-1.68				
	2441	ε_r	39.22	39.92	1.78	2026/04/27	21.6	60.1	20.0
		σ (S/m)	1.79	1.76	-1.68				
	2480	ε_r	39.16	39.86	1.79	2026/04/27	21.6	60.1	20.0
		σ (S/m)	1.83	1.80	-1.64				

*1 Target values are linearly interpolated between the values defined in IEEE Std 1528, when necessary.

*2 The deviation of measured values from target values must be within +/-5 %.

2.8. System Check Measurement

The system check was performed before each series of SAR measurements using the same probe calibration point and tissue-equivalent medium.

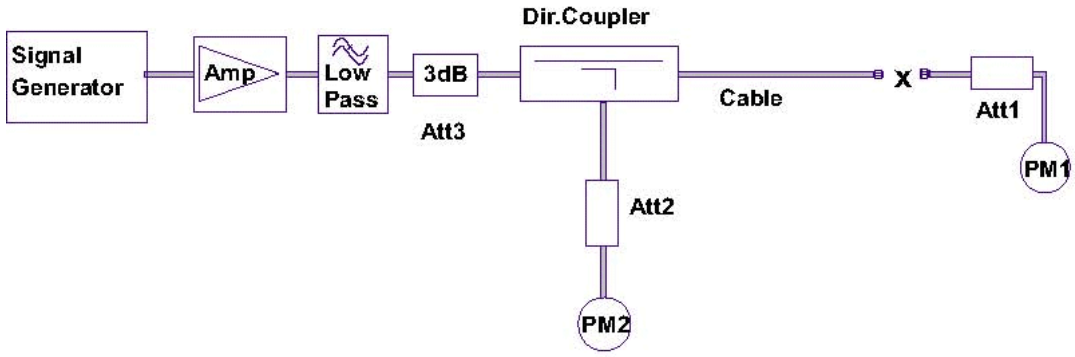

(a) System set-up 1

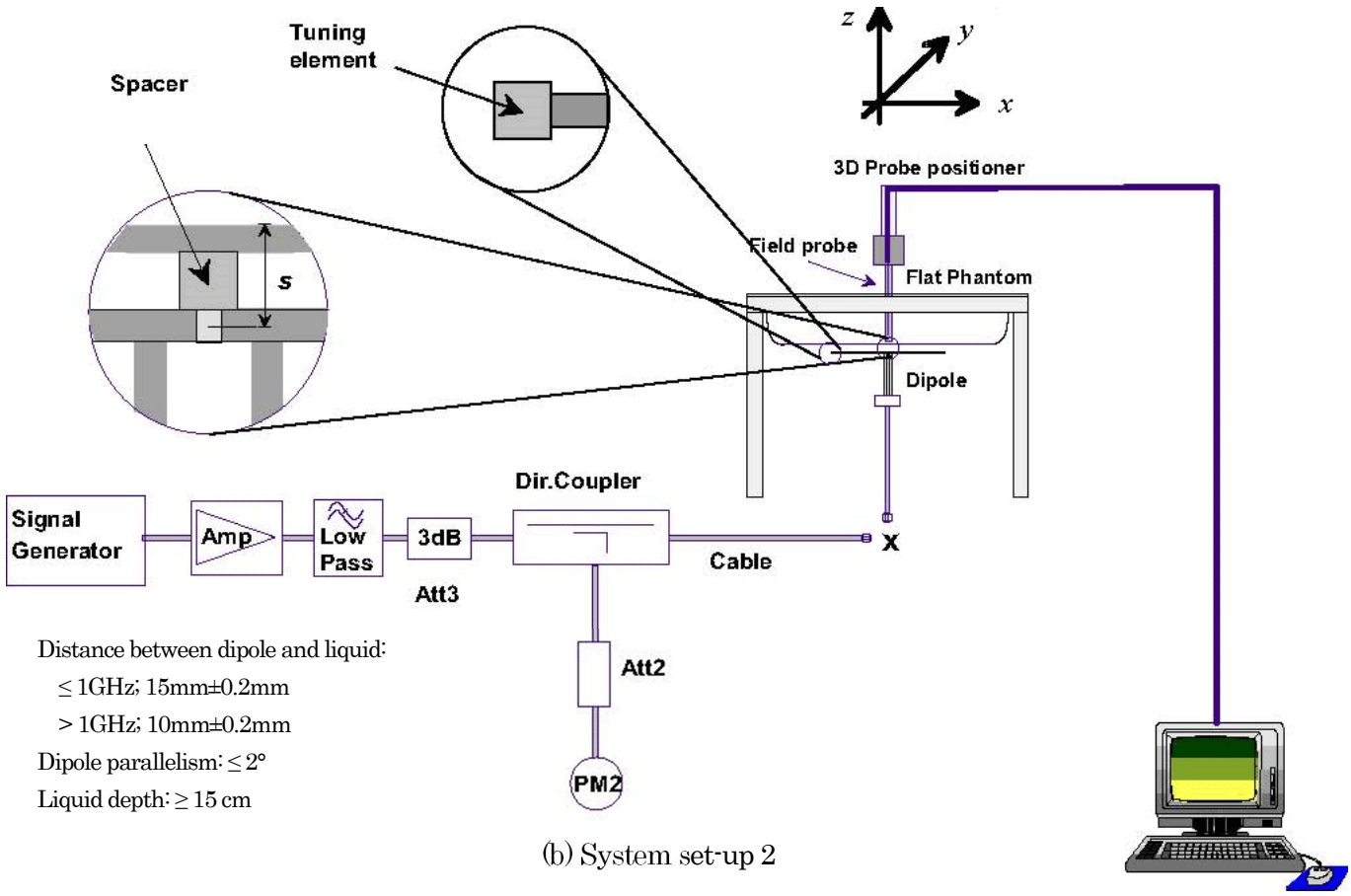

(b) System set-up 2

Figure 2-4 SAR System Check Measurement Set-up

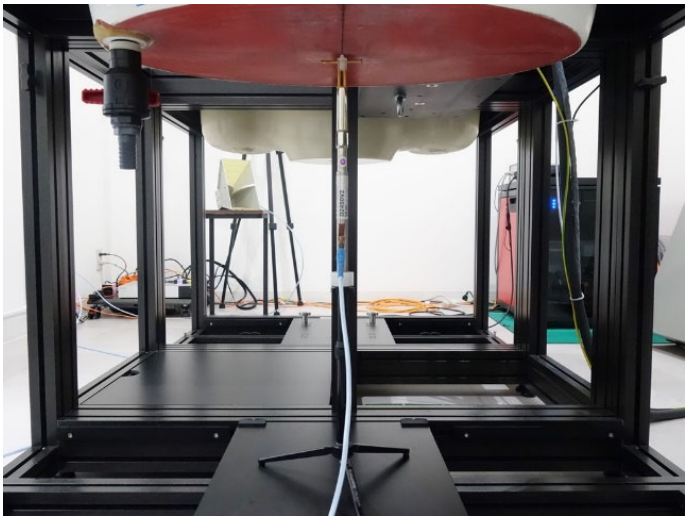

D2450V2

(c) Photo: System Validation Dipole Placement

Figure 2-4 SAR System Check Measurement Set-up (continued)

4th Site Shielded Room 3

System Validation Dipole	Freq. (MHz)	Param.	250 mW-Meas. (W/kg)	1 W-Norm. (W/kg) *1	1 W-Target (W/kg) *2	Dev. (%) *3	Date	Amb. Temp. (deg. C)	Rel. Hum. (%RH)	Liquid Temp. (deg. C)
D2450V2	2450	1-g SAR	13.80	55.20	52.20	5.75	2026/04/27	21.8	61.3	20.0
		10-g SAR	6.48	25.92	24.60	5.37				

*1 The normalized values (1 W) were calculated by normalizing the measured values to 1-W forward input power.

*2 The target values (1 W) are defined in IEEE Std 1528 and/or the calibration certificate of system validation dipoles used.

*3 The deviation of normalized values from target values must be within +/-10 %.

3. Conducted Power Measurements

3.1. Conducted Power Measurement Results

Bluetooth

Date of measurement	Ambient temperature (deg.C)	Relative humidity (%RH)	Measured by
2026/4/20	22.4	56.5	Mikiko Kouga
2026/4/22	24.1	38.0	Mikiko Kouga

Mode	Ch.	Freq. (MHz)	Packet Type	Meas. Frame Averaged Power (dBm)	Meas. Burst Averaged Power (dBm) *1	Max. Poss. Power (dBm)	Within 2 dB of Max Poss. Power	SAR Tested	Note(s)
Classic	0	2402	DH5	4.24	5.40	6.50	Yes	Yes	-
	39	2441	DH5	**4.31**	5.47	6.50	Yes	Yes	Worst Ch
	78	2480	DH5	4.29	5.44	6.50	Yes	Yes	-
LE	0	2402	1.0 Mbps	0.70	1.41	3.00	Yes	Yes	-
	19	2440	1.0 Mbps	0.86	1.57	3.00	Yes	Yes	-
	39	2480	1.0 Mbps	**0.90**	1.61	3.00	Yes	Yes	Worst Ch

*1 Used for confirmation that the DUT's output power is within +0/-2 dB of the maximum tune-up tolerance limits (max. poss. power), since the maximum tune-up tolerance limits are defined as burst averaged values.

Duty Cycle Plot(s) for Bluetooth

Bluetooth Classic	Bluetooth LE
2.8712 ms / 3.7496 ms = 76.57 %	2.1196 ms / 2.4998 ms = 84.79 %
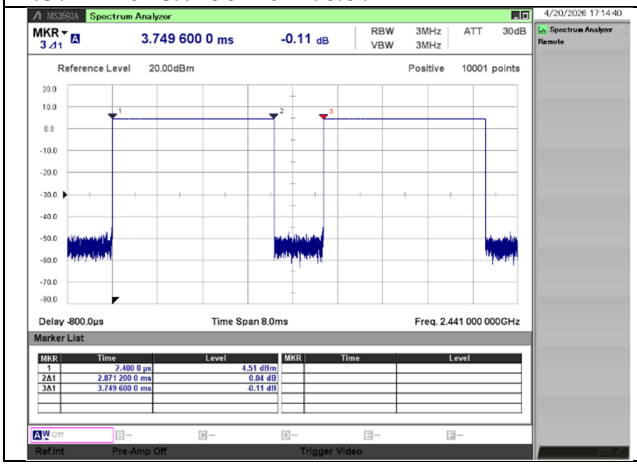	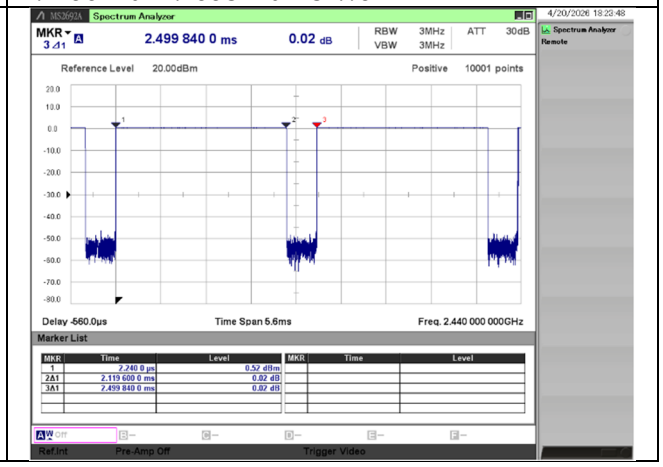

4. SAR Measurement

☒ **<SAR Correction/Scaling>**

According to KDB 447498 D04, KDB 248227 D01, and/or KDB 865664 D01,
the maximum SAR values are determined by taking account of the following correction or scaling factors.

The maximum 1-g SAR and/or 10-g SAR values (reported SAR) are calculated by applying the ΔSAR positive correction for deviations of the tissue-equivalent liquid and the power scaling for the maximum duty factor and maximum possible power levels (maximum tune-up tolerance limit) to each measured 1-g SAR and/or 10-g SAR value:

Reported SAR (W/kg) = Measured SAR (W/kg) * ΔSAR positive correction factor
* Duty cycle scaling factor * Tune-up scaling factor

where;

ΔSAR positive correction factor = (100 - ΔSAR*1) / 100

Duty cycle scaling factor = Max. possible duty cycle / Measured duty cycle used for the SAR measurement

Tune-up scaling factor = Max. possible power (mW) / Measured power used for the SAR measurement (mW)

*1 $\Delta SAR\ (\%) = c_e * \Delta\varepsilon_r + c_o * \Delta\sigma$

<For 1-g SAR>

$c_e = -7.854 * 10^{-4} f^3 + 9.402 * 10^{-3} f^2 - 2.742 * 10^{-2} f - 0.2026$

$c_o = 9.804 * 10^{-3} f^3 - 8.661 * 10^{-2} f^2 + 2.981 * 10^{-2} f + 0.7829$

<For 10-g SAR>

$c_e = 3.456 * 10^{-3} f^3 - 3.531 * 10^{-2} f^2 + 7.675 * 10^{-2} f - 0.1860$

$c_o = 4.479 * 10^{-3} f^3 - 1.586 * 10^{-2} f^2 - 0.1972 f + 0.7717$

where;

c_e	coefficient representing the sensitivity of SAR to permittivity
$\Delta\varepsilon_r$	percent change in permittivity
c_o	coefficient representing the sensitivity of SAR to conductivity
$\Delta\sigma$	percent change in conductivity
f	frequency in GHz

A negative ΔSAR would translate to a lower measured SAR value than what would be measured if using dielectric properties equal to the target values.

A positive ΔSAR would translate to a higher measured SAR value than what would be measured if using dielectric properties equal to the target values.

SAR correction shall not be made when the ΔSAR has a positive sign to provide a conservative SAR value.

The SAR is only corrected when ΔSAR has a negative sign.

4.1. SAR Measurement Results

<Body-Worn SAR>

Bluetooth

Date of measurement	Ambient temperature (deg.C)	Relative humidity (%RH)	Measured by
2026/4/27	23.0	61.4	Yu Inoue

Mode	Ch.	Freq. (MHz)	Packet Type	Pos.	Dis. (mm)	Max. Poss. Power (dBm) *1	Meas. Power (dBm)	Max. Duty Cycle (%)	Meas. Duty Cycle (%)	Meas. 1-g SAR (W/kg)	Reported 1-g SAR (W/kg) *2	Liquid Temp. (deg. C)	Plot No.
Classic	0	2402	DH5	Front	0	6.50	5.40	83.30	76.57	0.054	0.076	20.4	-
	39	2441	DH5			6.50	5.47	83.30	76.57	0.056	0.077	20.5	-
	78	2480	DH5			6.50	5.44	83.30	76.57	0.063	**0.087**	20.5	1
LE	0	2402	1.0 Mbps			3.00	1.41	100.00	84.79	0.023	0.039	20.5	-
	19	2440	1.0 Mbps			3.00	1.57	100.00	84.79	0.025	0.041	20.5	-
	39	2480	1.0 Mbps			3.00	1.61	100.00	84.79	0.027	0.044	20.5	-

*1 The burst averaged power values are used for power scaling since the maximum tune-up tolerance limits are defined as burst averaged values.

*2 Reported SAR (W/kg) = Measured SAR (W/kg) * Duty cycle scaling factor * Tune-up scaling factor

where;

Duty cycle scaling factor = Max. possible duty cycle (%) / Measured duty cycle used for the SAR measurement (%)

Tune-up scaling factor = Max. possible power (mW) (* equal to 100% duty cycle) / Measured power used for the SAR measurement (mW)

Appendix A. Plots of SAR Measurement

Please see the following pages.

Plot No. 1

Test Laboratory: Sony Global Manufacturing & Operations Corporation EMC/RF Test Laboratory Main Lab. 4th Site Shielded Room 3

Measurement Report for YY3013_Bluetooth (DH5_78ch)_Front_0mm

Device under Test Properties

Model, Manufacturer	Dimensions [mm]	Serial Number
YY3013	102.0 x 83.0 x 40.0	1110478 (Demo)

Exposure Conditions

Phantom Section	TSL	Position	Test Distance [mm]	TSL Conductivity [S/m]	TSL Permittivity
Flat	Head Simulating Liquid	Front	0.00	1.80	39.9

Band	Group	Frequency [MHz]	Channel Number [Ch]	Conversion Factor
ISM 2.4 GHz Band	Bluetooth	2480.000	78	6.75

Hardware Setup

DASY8 Software Version	Phantom	TSL (Measured Date)	Probe (Calibration Date)
17.0.4.7034	ELI V5.0 (20deg probe tilt)- 1259	HBBL600-10000 (2026-04-27)	EX3DV4 - SN7452 (2026-03-20)

DAE (Calibration Date)
DAE4 Sn482 (2025-07-31)

Scan Setup

	Area Scan	Zoom Scan
Grid Extents [mm]	120.0 x 140.0	30.0 x 30.0 x 30.0
Grid Steps [mm]	10.0 x 10.0	5.0 x 5.0 x 1.5
Sensor Surface [mm]	3.0	1.4
Graded Grid	N/A	Yes
Grading Ratio	N/A	1.4
MAIA		Y
Surface Detection		VMS + 6p
Scan Method		Measured

Measurement Results

	Area Scan	Zoom Scan
Date		2026-04-27
psSAR1g [W/kg]	0.061	0.063
psSAR10g [W/kg]	0.025	0.024
Power Drift [dB]		0.00
Power Scaling		Disabled
TSL Correction		Positive only
M2/M1 [%]	N/A	67.2
Dist 3dB Peak [mm]	N/A	5.4

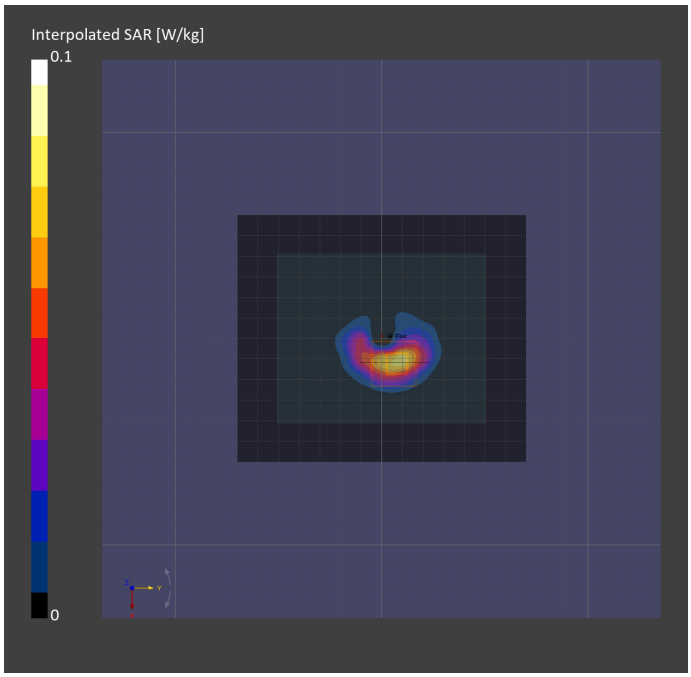

Appendix B. Plots of System Check

Please see the following pages.

Test Laboratory: Sony Global Manufacturing & Operations Corporation EMC/RF Test Laboratory Main Lab. 4th Site Shielded Room 3

Measurement Report for System Check_D2450_HSL

Device under Test Properties

Model, Manufacturer	Dimensions [mm]	Serial Number
D2450V2 - SN936	50.0 x 10.0 x 290.0	-

Exposure Conditions

Phantom Section	TSL	Position	Test Distance [mm]	TSL Conductivity [S/m]	TSL Permittivity
Flat	Head Simulating Liquid	-	-	1.77	39.9

Band	Group	Frequency [MHz]	Channel Number [Ch]	Conversion Factor
-	CW	2450.000	0	6.75

Hardware Setup

DASY8 Software Version	Phantom	TSL (Measured Date)	Probe (Calibration Date)
17.0.4.7034	ELI V5.0 (20deg probe tilt)- 1259	HBBL600-10000 (2026-04-27)	EX3DV4 - SN7452 (2026-03-20)

DAE (Calibration Date)
DAE4 Sn482 (2025-07-31)

Scan Setup

	Area Scan	Zoom Scan
Grid Extents [mm]	40.0 x 80.0	30.0 x 30.0 x 30.0
Grid Steps [mm]	10.0 x 10.0	5.0 x 5.0 x 1.5
Sensor Surface [mm]	3.0	1.4
Graded Grid	N/A	Yes
Grading Ratio	N/A	1.5
MAIA		N/A
Surface Detection		VMS + 6p
Scan Method		Measured

Measurement Results
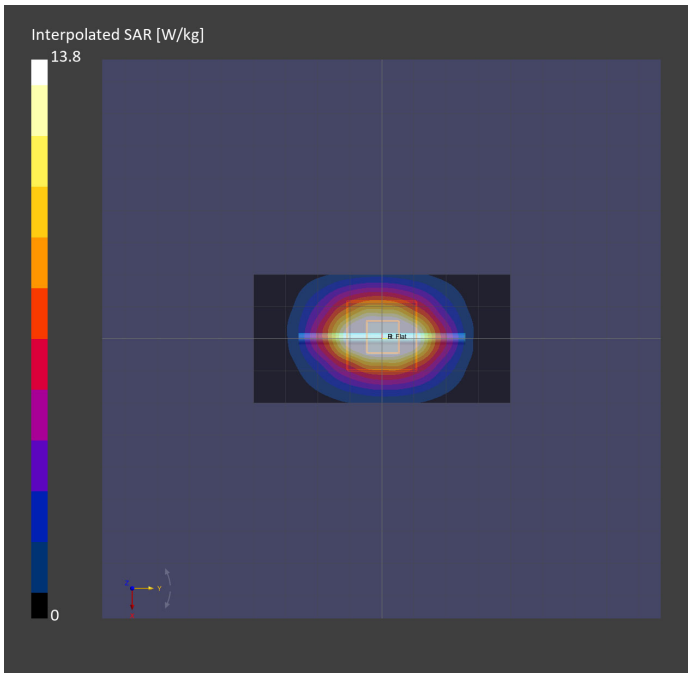
	Area Scan	Zoom Scan
Date		2026-04-27
psSAR1g [W/kg]	14.0	13.8
psSAR10g [W/kg]	6.48	6.48
Power Drift [dB]		0.00
Power Scaling		Disabled
TSL Correction		Positive only
M2/M1 [%]	N/A	82.5
Dist 3dB Peak [mm]	N/A	9.0