Approval Sheet

Product	HIGH DIELECTRIC CHIP ANTENNA		
Customer	CRESYN		
Model	SONY HDX-2783		
Customer Code			
Supplier	MicroRF Co., LTD.		
Supplier Code	AHSBTM0602-B00		
Customer	Designed by	Checked by	Approved by
MicroRF	Designed by	Checked by	Approved by
	R&D	QC	R&D
	Hyunjoo.Park	Youho.Lee	Hongchul.Kim

2014. 06. 04

MicroRF Co., Ltd.

TEL. 82-2-6406-5590
FAX. 82-70-8611-3586

[LEAD FREE]

MSL Level 1

SPECIFICATION

Model : SONY HDX-2783

HIGH DIELECTRIC CHIP ANTENNA

Designed by	Checked by	Approved by
R&D	QC	R&D
Hyunjoo.Park	Youho.Lee	Hongchul.Kim
140604	140604	140604

2014. 06. 04

MicroRF Co., Ltd.

TEL. 82-02-6406-5590

FAX. 82-70-8611-3586

Contents

1. Revision History 1

2. Feature And Applications 2

3. CODE NO. 2

4. Electrical Specifications 2

5. Mechanical Dimensions 7

6. Measurement Method and Conditions 7

7. Environmental Specifications 8

8. Environmental Tests 9

9. Recommended Soldering Patterns 1 0

10. Packaging 1 1

11. Usage And Cautions 1 1

12 .RoHS Data 1 2

1. Revision History

Product	High Dielectric Chip Antenna	Model	SONY HDX-2783
		CODE NO.	AHSBTM0602-B00

Rev No.	Date	Name	Page	Item	Revision Issue
1.0	140604	HJ.Park			Issued

2. Feature And Applications

This Chip antenna is applied to 2.4 GHz ISM band applications, i.e. wireless LAN, Bluetooth, Zigbee, etc..

3. CODE NO.

CODE NO. : AHSBTM0602-B00

CUSTOMER PART NO. :

4. Electrical Specifications

4-1.

* All items are measured in room temperature (25℃).
* All items are measured at customer set condition.

No.	ITEM	Specification		Typical Data	
1	Frequency	2400 MHz	2500 MHz	2400 MHz	2500 MHz
2	VSWR	3.5 max	8.0 max	1.9	6.5
3	Total Gain(Peak)	-1.5 dBi min	-6.0 dBi min	0.0 dBi	-4.19 dBi
4	Impedance	50 Ω			
5	Polarization	Linear			

4-2 VSWR data (S11 of SET condition)

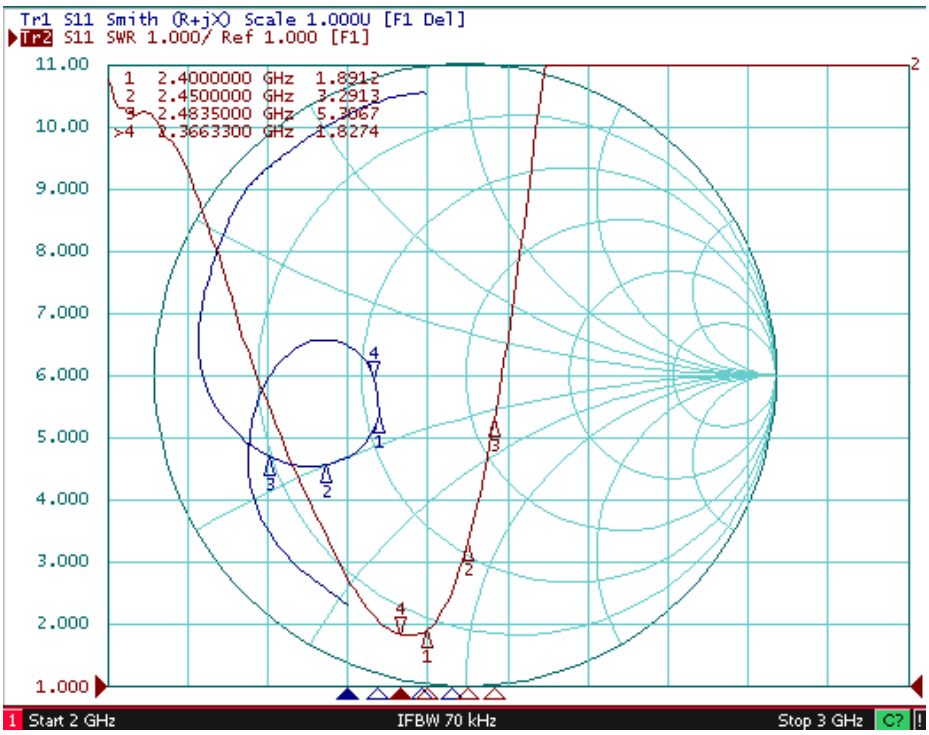

4-3 2D Radiation Patterns

Peak Value(Beam Peak :dBi)

	Azimuth Plane	Elevation 1	Elevation 2
2.4 GHz	-0.715	0.529	-1.393
2.45 GHz	-1.950	-0.453	-1.299
2.5 GHz	-6.573	-4.193	-5.252

(MicroRF Chamber 기준)

(a) Azimuth Plane (XY) – Horizontal Polarization

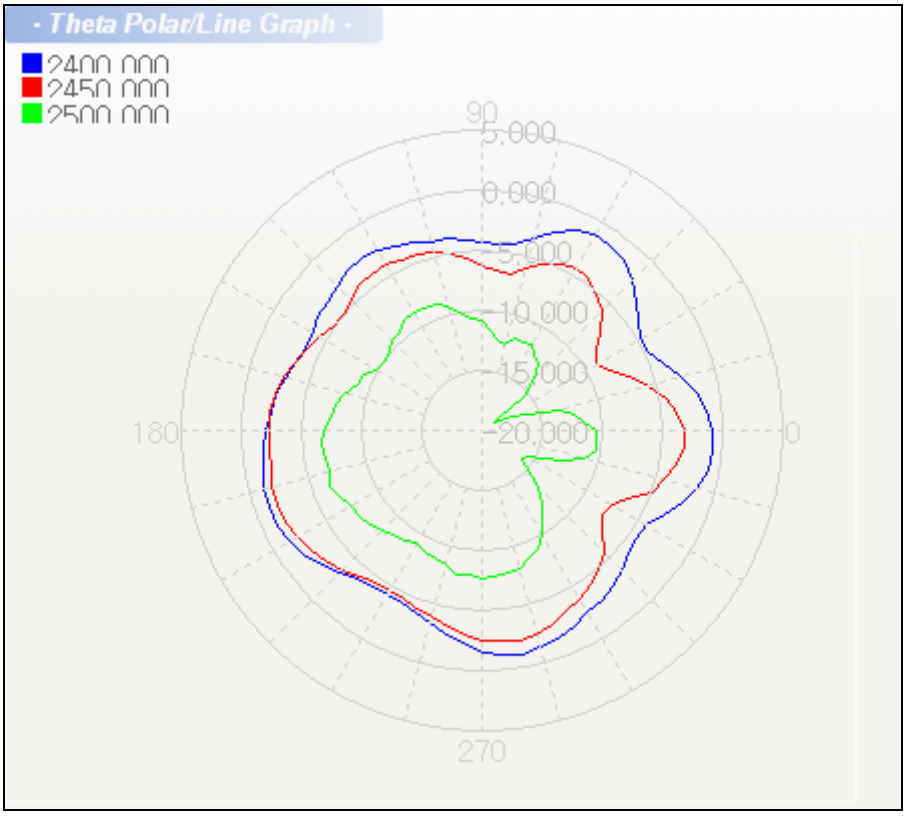

(b) Elevation1 Plane (YZ) – Vertical Polarization

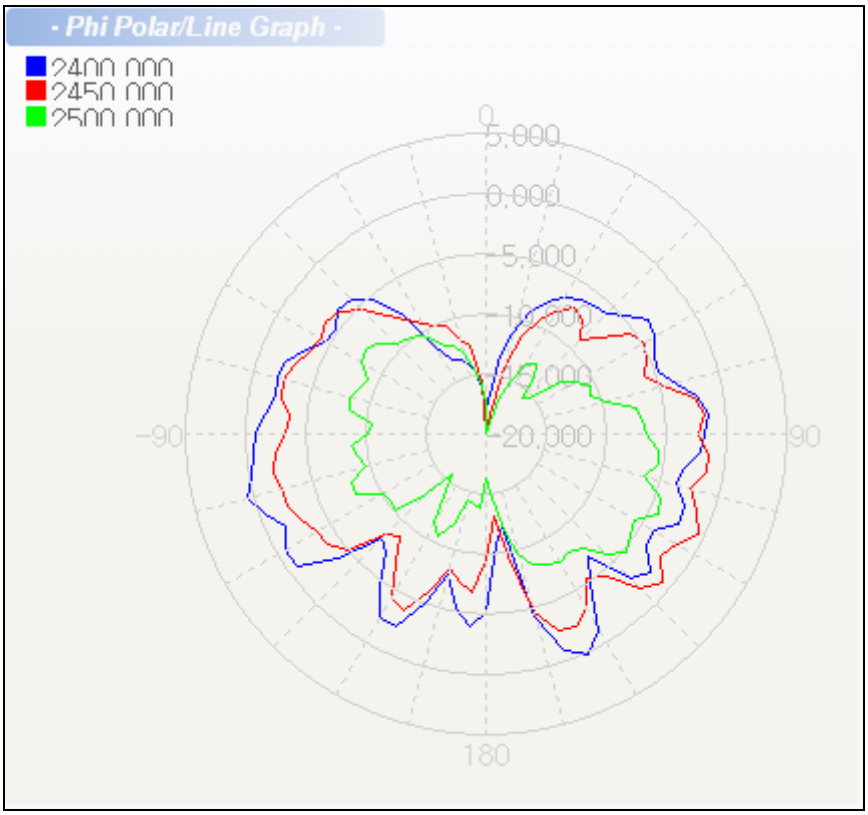

(c) Elevation2 Plane (XZ) – Vertical Polarization

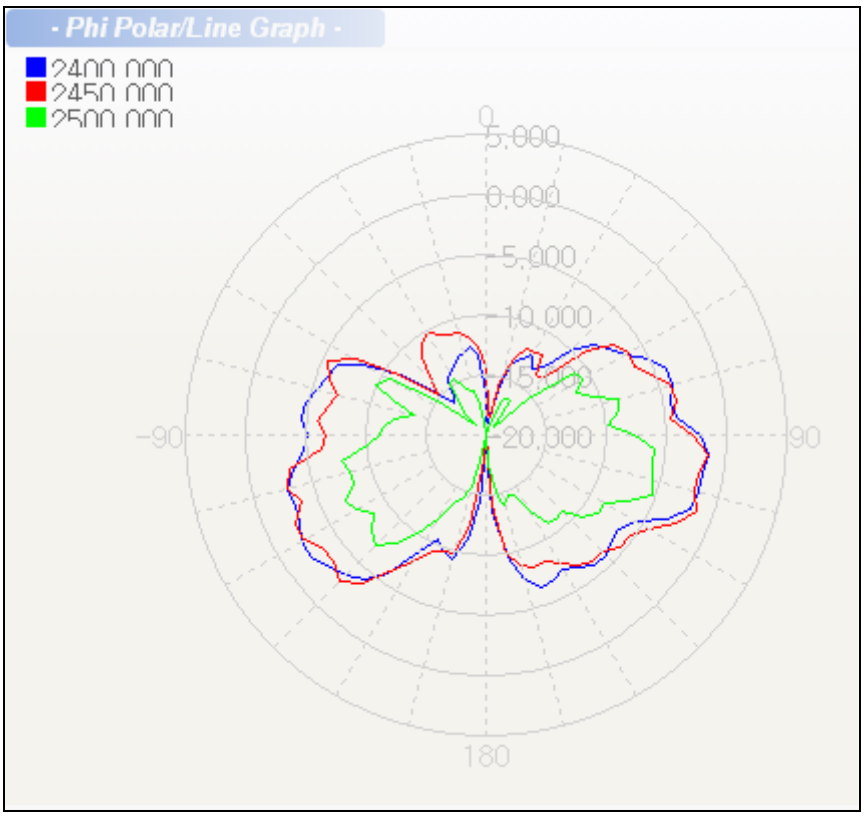

4-4 3D Radiation Patterns

Frequency	Peak Value		Minimum Value		Avg. Gain	Efficiency
[MHz]	Value[dBi]	Degree	Value[dBi]	Degree	[dBi]	[%]
2400	0.639	120 / 90	-14.887	0 / 0	-3.107	48.897
2450	-0.264	120 / 150	-16.574	0 / 30	-4.355	36.683
2500	-5.789	120 / 180	-18.099	0 / 60	-9.610	10.939

5. Mechanical Dimensions

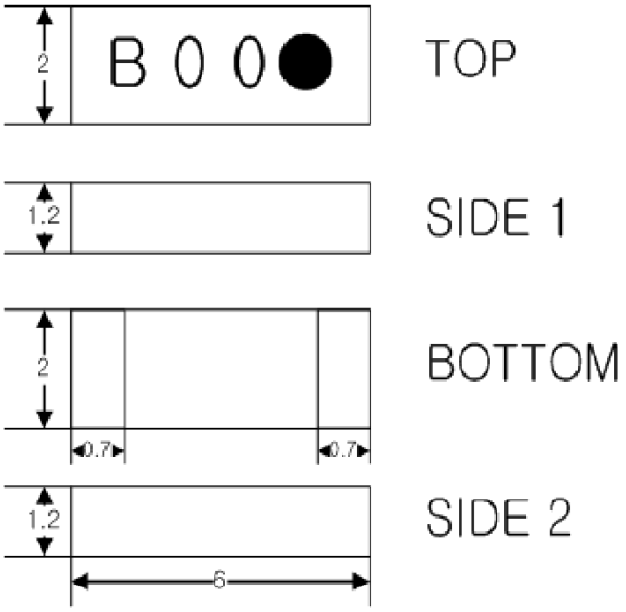

6. Measurement Method and Conditions

The measurement of antenna performance is measurement of gain, radiation pattern using ORBIT/FR apparatus in Anechoic chamber and measurement of VSWR using Network analyzer.

6-1. The measurement of Frequency and VSWR

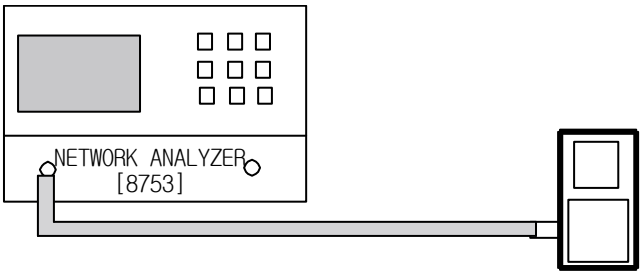

<Measurement Method>

1) As seen the above, network analyzer is set up for S11 measurement.

2) The measurement frequency range is to set up from 2 GHz to 3 GHz.

3) Perform S11 one port full calibration.

4) Measure the VSWR of three points of Bluetooth frequency range such as 2400 MHz, 2450 MHz, and 2500 MHz.

6-2. The measurement of Gain and Radiation Patterns

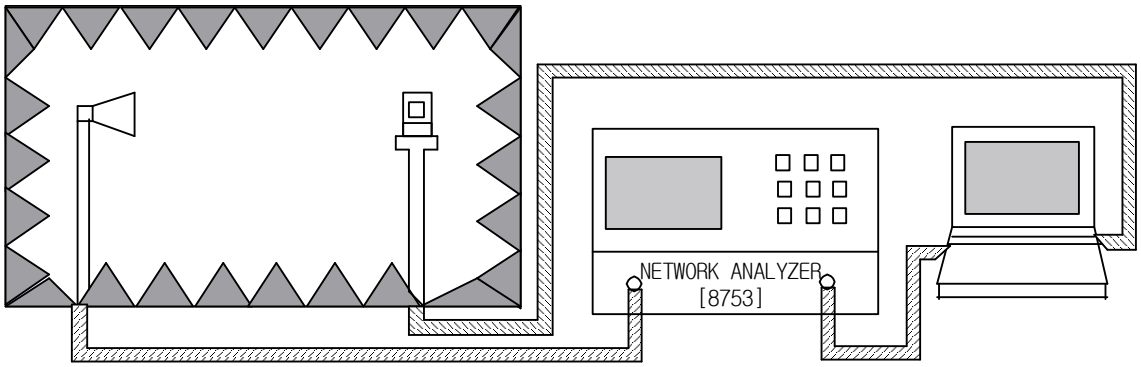

<Measurement Method>

1) As seen the above, network analyzer is to set up in Anechoic chamber.

2) As seen the beneath, for the measurement planes as Azimuth, Elevation1, and Elevation2, measure Gain data of vertical polarization and horizontal polarization for each plane.

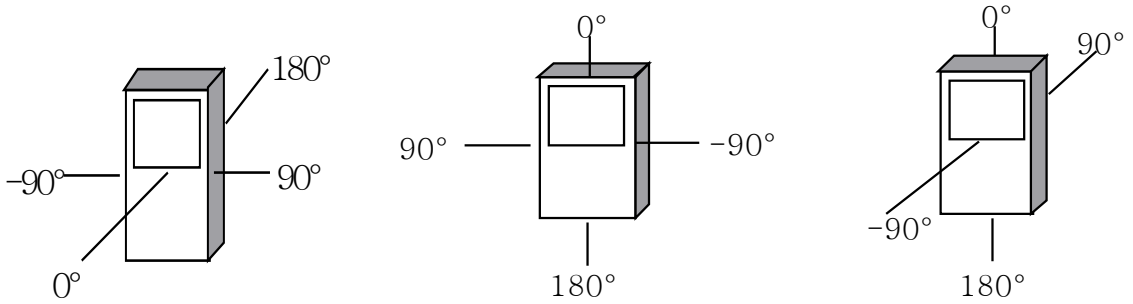

(AZIMUTH PLANE) (ELEVATION1 PLANE) (ELEVATION2 PLANE)

7. Environmental Specifications

No.	Items	Specifications
1	Material	Pb-free system
2	Operating Temperature Range	-30 ~ +85 ℃
3	Operating Humidity Range	45 ~ 85 % RH

8. Environmental Tests

No.	Item	Test Conditions
1	High Temperature Storage	Leave for 72±2 hours in a test bath retaining 85±2℃. After then, leave on the test conditions for 1.5 hours.
2	Low Temperature Storage	Leave for 72±2 hours in a test bath retaining -30±2℃. After then, leave on the test condition for 1.5 hours.
3	Static Humidity	Leave for 24±2 hours in a test bath retaining 90~95% RH / 50±3℃. After then, leave in the test condition for 1.5 hours.
4	Thermal Shock	Cool from 25℃ down to -30±2℃ and leave for 30 minutes. After that, heat up to +85±2℃ and leave for 30 minutes. After then, cool down to 25℃. Repeat the cycle 15 times and leave on the test conditions for 1.5 hours.
5	Drop Shock	Drop 150g weight onto steel floor from the height of 152cm, 19 times and 120cm, 12 times.
6	Vibration	With 5g of the whole acceleration at 20 to 2000 Hz, apply a vibration for 2 hours for each of 3 directions.
	Solder Proof	No reaching after reflow for 5±1 sec at 260℃.
8	Soldering Conditions	230±5℃ / 5±1 sec for Sn/Pb soldering system 245±5℃ / 2±1 sec for Pb-free soldering system

9. Recommended Soldering Patterns

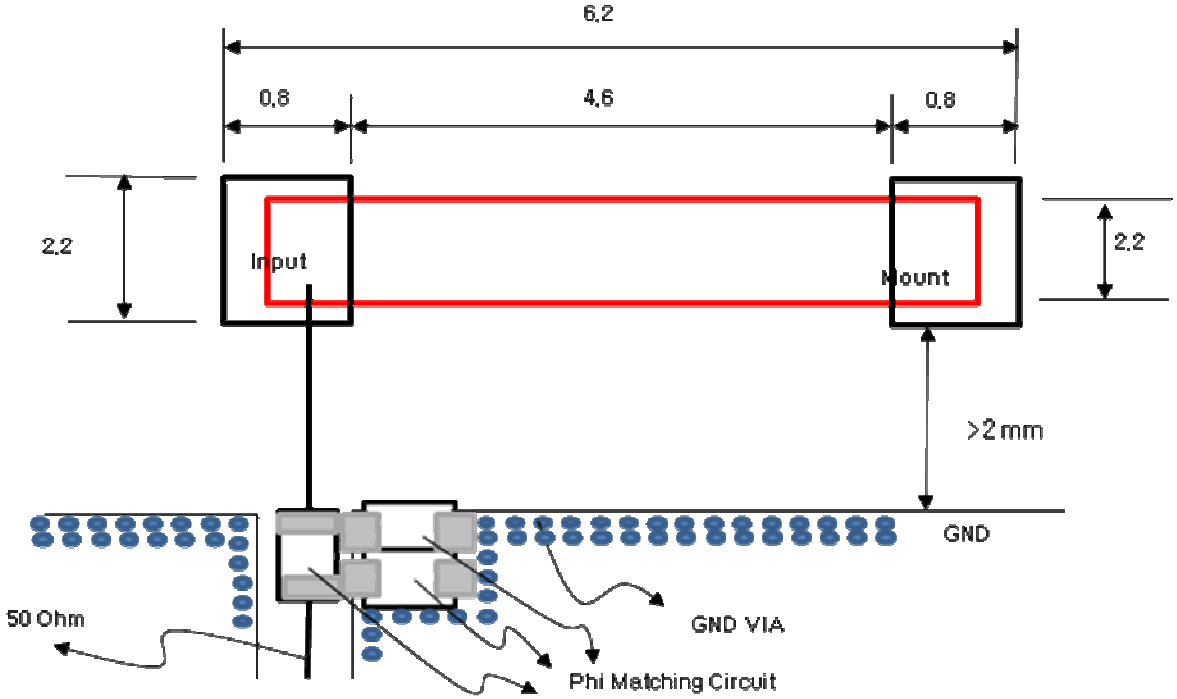

10. PACKAGING

10-1. Reel Taping Quantity

10,000 pcs / 1 reel

10-2. Reel Dimensions

: Reel Hall Direction should be same as Input Dot Direction of Antenna.

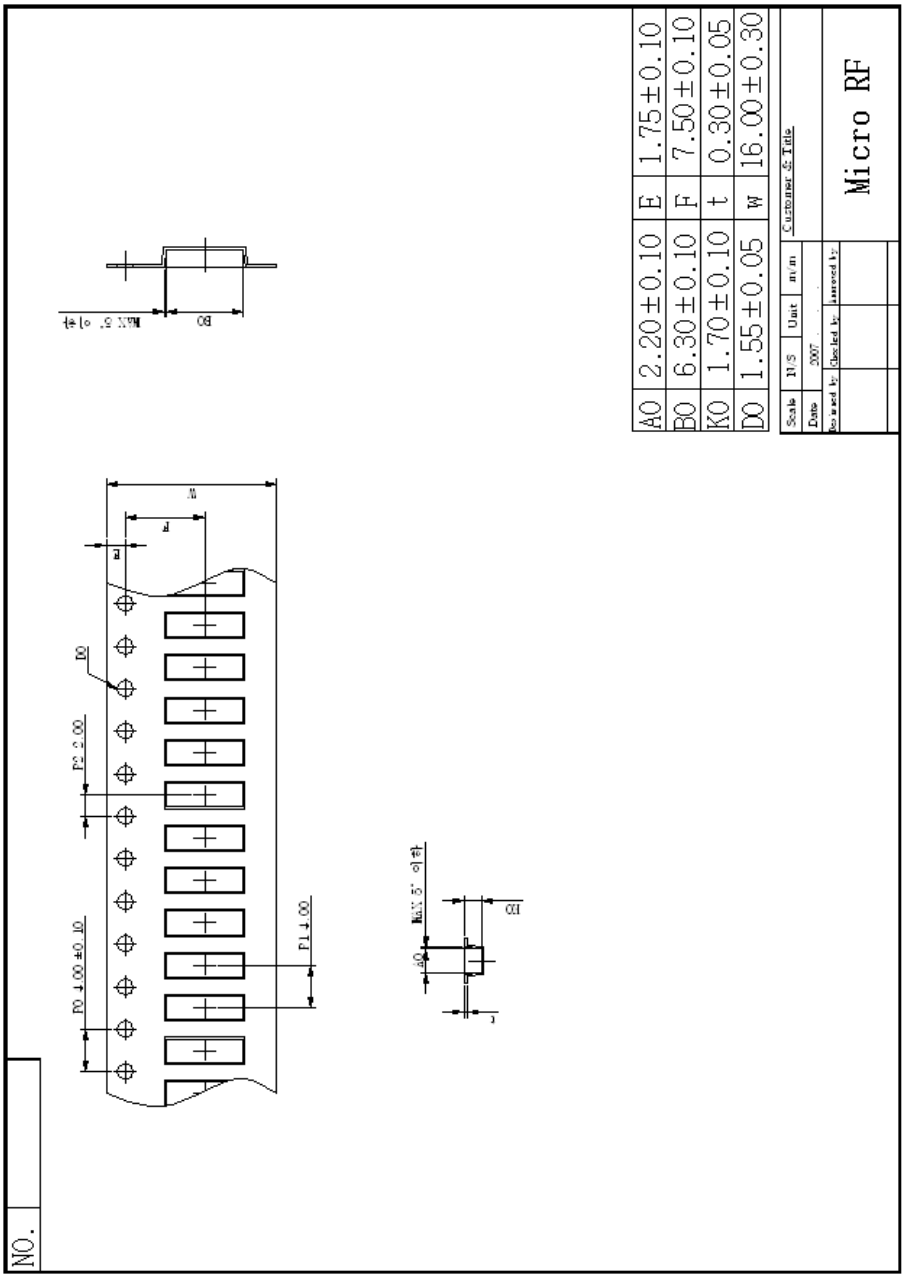

11. USAGE AND CAUTIONS

- Safe-keeping conditions: 3 months in 20±15℃ and less than 60% RH

12 .RoHS Data

ktl 한국산업기술시험원 Korea Testing Laboratory

Report No. : 13-022692-01-1
1 page of 3 pages

TEST REPORT

1.Applicant

Name	: Micro Rf Co.,Ltd.
Address	: #1106~1107, Daeryung Techno Town 12, 327-32,Gasan-dong, Geumcheon-gu, Seoul, Korea

2.Products

Name	: Chip Antenna
Model/Type	: AH-series
Manufacturer	: This merchandise was submitted and identified by the client.

3. Test Standard/Method	: Refer to the attached sheet.
4. Test Results	: Refer to the attached sheet.
5. Use of Report	: Q.C.
6. Date of Application	: 2013. 05. 24.
7. Date of Issue	: 2013. 06. 07.

Tested by	Approved by
Lee Kyung Mee	Seo No - Kun
Material analysis Center	Material analysis Center

The test results contained apply only to the test sample(s) supplied by the applicant, and this test report shall not be reproduced in full or in part without approval of [illegible] in advance.

Korea Testing Laboratory

87, Digital-ro 26-gil, Guro-gu, Seoul, KOREA
http://www.ktl.re.kr
Tel. : +82-2-860-1581
Fax. : +82-(02)860-1589

FP204-03-02

※위 마크는 추후 전자확인증 대조 프로그램에서 원본대조시 사용되는 2D코드입니다.

ktl 한국산업기술시험원 Korea Testing Laboratory

Report No. : 13-022692-01-1

2 page of 3 pages

TEST RESULT

1. Test Conditions : (24 ± 2) ℃, less than 50 %R.H.

2. Quantitative Analysis Results

1) Analysis of Heavy Metals

(Unit : mg/kg)

Element	Test Method	MDL [1)]	Result
Pb	Refer to IEC 62321:2008	6.0	Not detected
Cd	Refer to IEC 62321:2008	7.0	Not detected
Hg	Refer to EPA 7473	0.5	Not detected
Cr^{6+}	Refer to IEC 62321:2008	0.2	Not detected

[1)] MDL : Method Detection Limits.

2) Analysis of Brominated Flame Retardants

(Unit : mg/kg)

Element	Test Method	MDL [1)]	Result
Total PBBs	Refer to IEC 62321:2008	-	Not detected
Mono-BB	"	4	"
Di-BB	"	5	"
Tri-BB	"	"	"
Tetra-BB	"	"	"
Penta-BB	"	"	"
Hexa-BB	"	"	"
Hepta-BB	"	"	"

FP204-04-01

※위 마크는 추후 전자확인증 대조 프로그램에서 원본대조시 사용되는 2D코드입니다.

(Unit : mg/kg)

Element	Test Method	MDL [1]	Result
Total PBDEs	Refer to IEC 62321:2008	-	Not detected
Mono-BDE	"	4	"
Di-BDE	"	5	"
Tri-BDE	"	"	"
Tetra-BDE	"	"	"
Penta-BDE	"	"	"
Hexa-BDE	"	"	"
Hepta-BDE	"	"	"
Octa-BDE	"	"	"
Nona-BDE	"	"	"
Deca-BDE	"	20	"

[1] MDL : Method Detection Limits

3) Analysis of Halogens

(Unit : mg/kg)

Element	Test Method	MDL [1]	Result
Cl	Refer to ASTM D 7359:2008	30	260
Br	Refer to ASTM D 7359:2008	30	Not detected

3. Test Instruments

Instrument	Maker	Model
ICP-OES	PERKIN ELMER	OPTIMA 4300
Mercury Analyzer	MILESTONE	DMA-80
Microwave Digestion System	MILESTONE	ETHOS1
GC-MS	Agilent Technologies	6890N GC/5973N MSD
C-IC	DIONEX/MITSUBISHI CHEMICAL Co.	ICS-2000/AQF-100
UV/Vis Spectrophotometer	VARIAN	CARY 300

THE END.

FP204-04-01

※위 마크는 추후 전자확인증 대조 프로그램에서 원본대조시 사용되는 2D코드입니다.