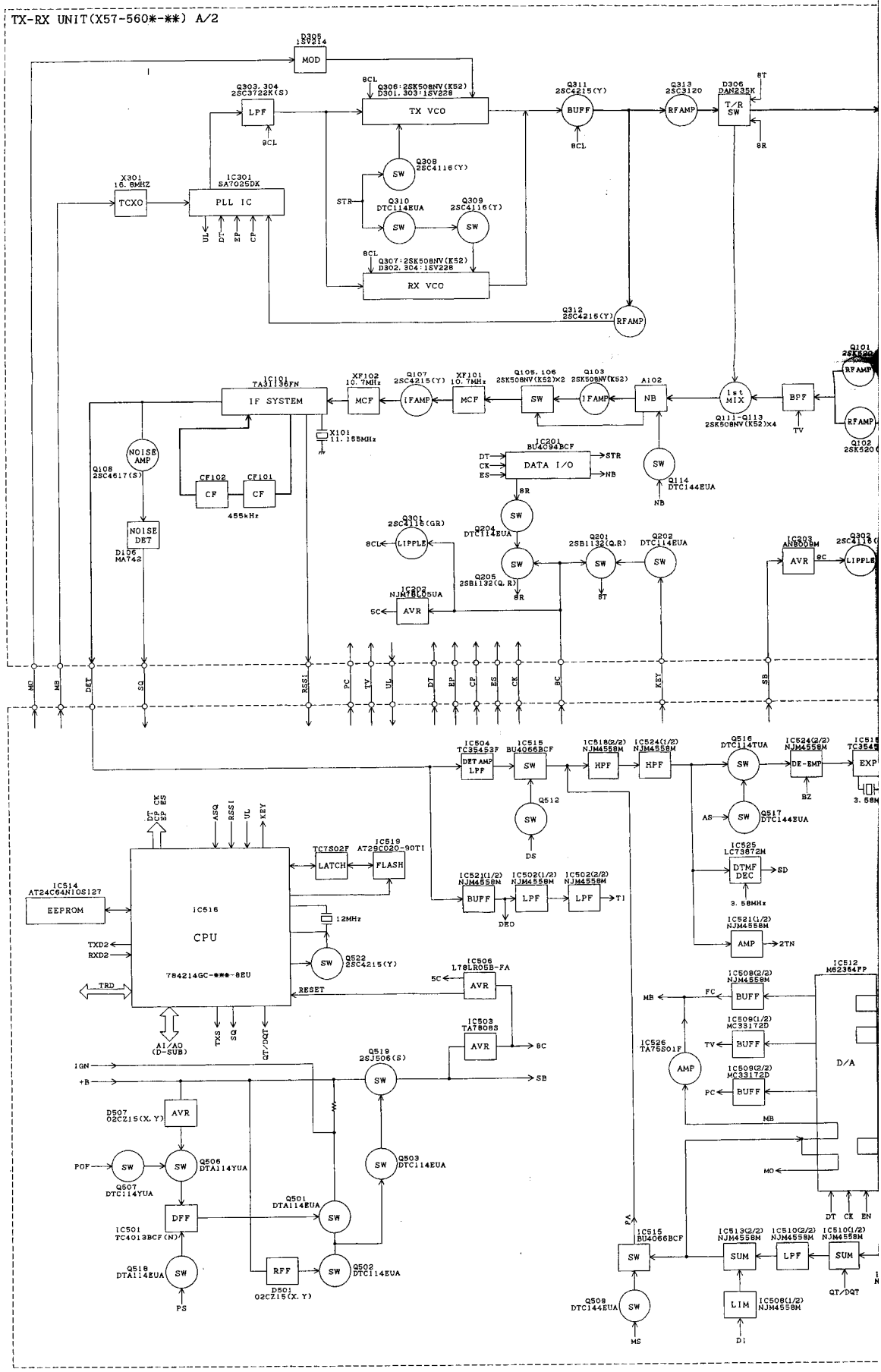
TX-RX UNIT(X57-560*-**) A/2
D305 1SV214
MOD
Q303, 304 2SC3722K(S)
LPF
8CL
Q306:2SK508NV(K52) D301, 303:1SV228
TX VCO
Q311 2SC4215(Y)
BUFF
Q313 2SC3120
RFAMP
D306 DAN235K
T/R SW
8T
8R
X301 16.8MHZ
TCXO
IC301 SAT025DK
PLL IC
UL
DI
EP
CP
Q308 2SC4116(Y)
SW
STR
Q310 DTC114EUA
Q309 2SC4116(Y)
Q307:2SK508NV(K52) D302, 304:1SV228
RX VCO
Q312 2SC4215(Y)
Q101 2SK520
Q102 2SK520
IC101 TA31136FN
IF SYSTEM
XF102 10.7MHz
MCF
Q107 2SC4215(Y)
IFAMP
XF101 10.7MHz
Q105, 106 2SK508NV(K52)×2
Q103 2SK508NV(K52)
A102
NB
1st MIX
Q111-Q113 2SK508NV(K52)×4
BPF
TV
X101 11.155MHz
NOISE AMP
Q108 2SC4617(S)
CF102
CF101
CF
455kHz
NOISE DET
D106 MA742
IC201 BU4094BCF
DATA I/O
DT
CK
ES
STR
NB
Q114 DTC144EUA
Q301 2SC4116(GR)
LIPPLE
Q204 DTC114EUA
Q201 2SB1132(Q,R)
Q202 DTC114EUA
Q205 2SB1132(Q,R)
IC202 NJM78L05UA
AVR
5C
IC203 AN8009M
9C
MO
MB
DET
SQ
RSSI
PC
TV
UL
DT
EP
CP
ES
CK
BC
KEY
SB
IC504 TC35453F
DET AMP LPF
IC515 BU4066BCF
IC518(2/2) NJM4558M
HPF
IC524(1/2) NJM4558M
Q516 DTC114TUA
IC524(2/2) NJM4558M
DE-EMP
BZ
IC518 TC3542
EXP
3.58M
Q512
DS
AS
Q517 DTC144EUA
IC525 LC73872M
DTMF DEC
SD
3.58MHz
IC521(1/2) NJM4558M
AMP
2TN
DT CK EP ES
ASQ
RSSI
UL
KEY
TC7S02F
LATCH
IC519 AT29C020-90TI
FLASH
IC514 AT24C64N10SI27
EEPROM
IC516
CPU
784214GC-***-8EU
12MHz
TXD2
RXD2
TRD
Q522 2SC4215(Y)
RESET
IC521(1/2) NJM4558M
BUFF
IC502(1/2) NJM4558M
LPF
IC502(2/2) NJM4558M
LPF
T1
DEO
IC506 L78LR05B-FA
AVR
5C
IC503 TA7808S
AVR
8C
AI/AO (D-SUB)
TXS
SQ
QT/DQT
IC508(2/2) NJM4558M
BUFF
FC
MB
IC509(1/2) MC33172D
BUFF
TV
IC509(2/2) MC33172D
BUFF
PC
IC526 TA75S01F
AMP
IC512 M62364FP
D/A
IGN
+B
Q519 2SJ506(S)
SW
SB
D507 02CZ15(X, Y)
AVR
POF
Q506 DTA114YUA
Q507 DTC114YUA
Q503 DTC114EUA
IC501 TC4013BCF(N)
DFF
Q501 DTA114EUA
Q518 DTA114EUA
PS
RFF
D501 02CZ15(X, Y)
Q502 DTC114EUA
MO
DT CK EN
IC515 BU4066BCF
IC513(2/2) NJM4558M
SUM
IC510(2/2) NJM4558M
LPF
IC510(1/2) NJM4558M
SUM
QT/DQT
Q509 DTC144EUA
MS
LIM
IC508(1/2) NJM4558M
DI

USE FOR	SYMBOL	REVISION NO	CODE	ISSUED	DATE
	A X				19 - -
	A X				19 - -
	A X				19 - -
	A X				19 - -
	A X				19 - -
	A X				19 - -
	A X				19 - -
	A X				19 - -
	A X				19 - -
	A X				19 - -

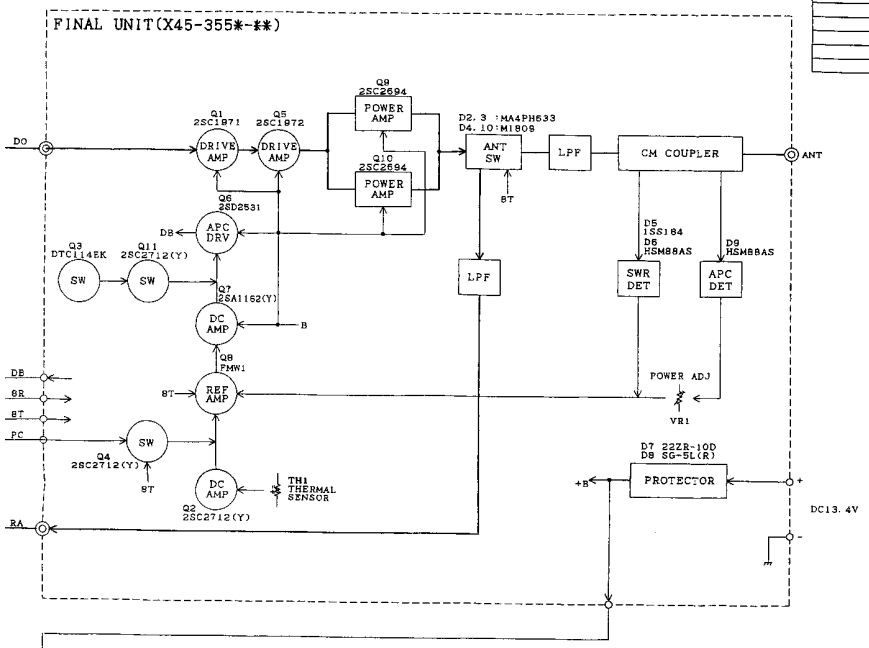

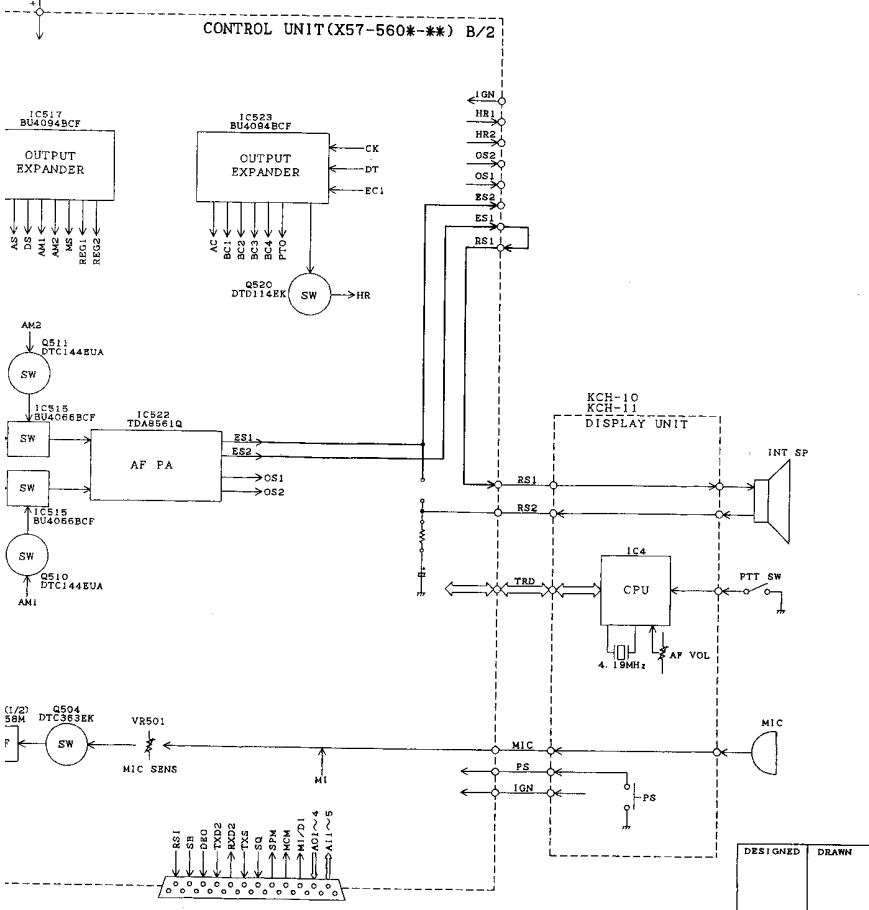

DESIGNED	DRAWN	CHECKED	APPROVED	PARTS NAME
				BLOCK DIAGRAM
				PARTS NUMBER
				TK-690H

株式会社ケンウッド KENWOOD CORPORATION