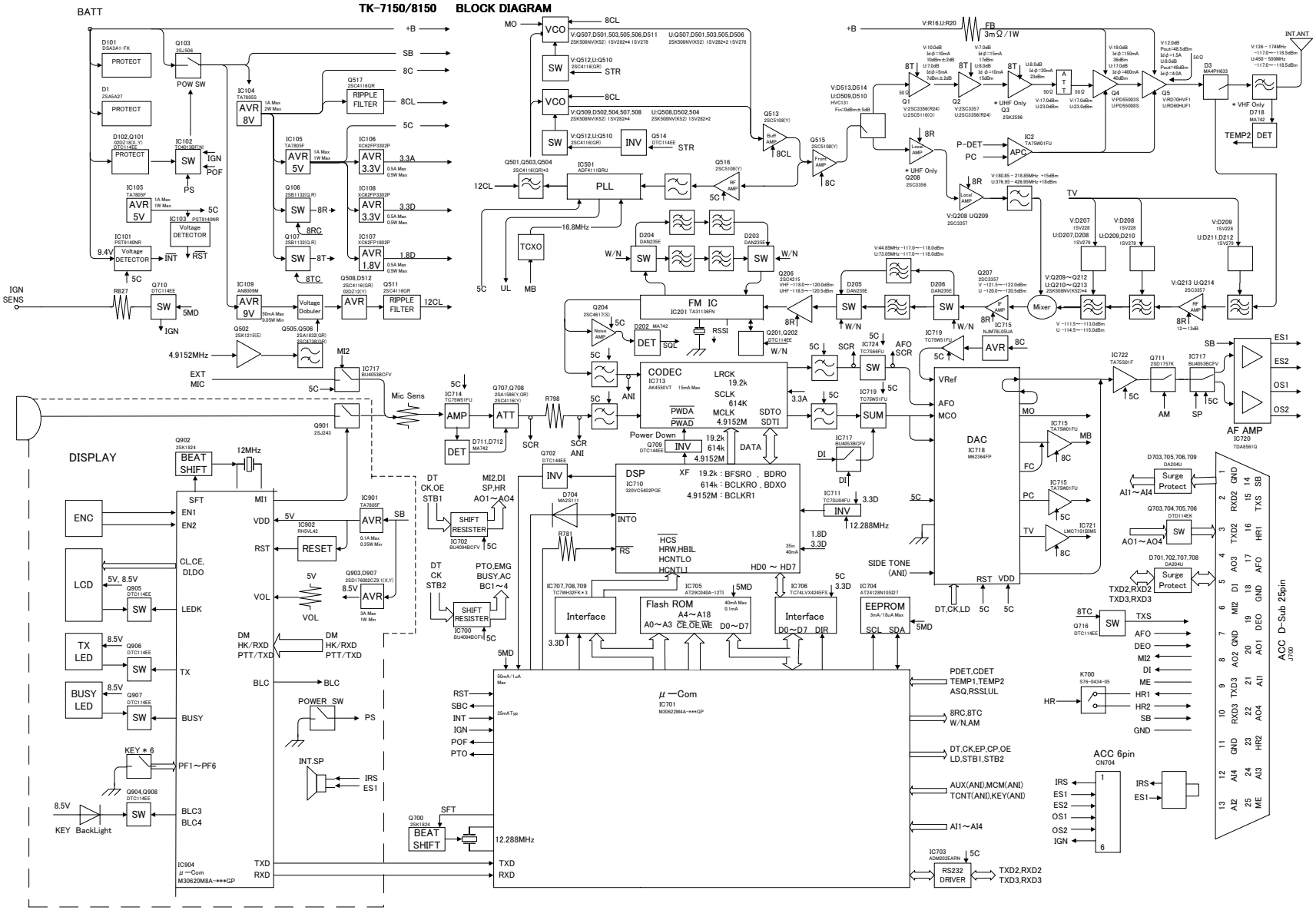TK-7150/8150 BLOCK DIAGRAM