A Test Lab Techno Corp.

Changan Lab：No. 140 -1, Changan Street, Bade City, Taoyuan County, Taiwan R.O.C.
Tel：886-3-271-0188 / Fax：886-3-271-0190

SAR EVALUATION REPORT

Test Report No.	:	1510FS22
Applicant	:	UNIDEN AMERICA CORPORATION
Product Type	:	Walkie Talkie
Trade Name	:	Uniden
Model Number	:	GMR2035-2, GMR2050-2C
Date of Received	:	Aug. 18, 2015
Test Period	:	Aug. 19 ~ Oct. 26, 2015
Date of Issued	:	Nov. 10, 2015
Test Environment	:	Ambient Temperature： 22 ±2 ° C
		Relative Humidity：40 - 70 %
Standard	:	ANSI/IEEE C95.1-1999
		IEEE Std. 1528-2013
		47 CFR Part §2.1093
		KDB 865664 D01 SAR Measurement 100 MHz to 6 GHz v01r04
		KDB 865664 D02 RF Exposure Reporting v01r02
		KDB 447498 D01 General RF Exposure Guidance v06
Test Lab Location	:	Chang-an Lab

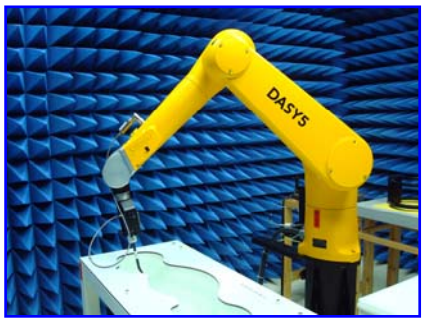

1. The test operations have to be performed with cautious behavior, the test results are as attached.
2. The test results are under chamber environment of A Test Lab Techno Corp. A Test Lab Techno Corp. does not assume responsibility for any conclusions and generalizations drawn from the test results with regard to other specimens or samples.
3. The measurement report has to be written approval of A Test Lab Techno Corp. It may only be reproduced or published in full. This report shall not be reproduced except in full, without the written approval of A Test Lab Techno Corp. The test results in the report only apply to the tested sample.

Approved By : Bill Hu (Bill Hu)

Tested By : Sky Chou (Sky Chou)

©2015 A Test Lab Techno Corp.

Contents

1. Summary of Maximum Reported SAR Value 3
2. Description of Equipment under Test (EUT) 4
3. Introduction 5
   3.1 SAR Definition 5
4. SAR Measurement Setup 6
   4.1 DASY E-Field Probe System 7
   4.1.1 E-Field Probe Specification 8
   4.1.2 E-Field Probe Calibration process 9
   4.2 Data Acquisition Electronic (DAE) System 10
   4.3 Measurement Server 10
   4.4 Device Holder 11
   4.5 Oval Flat Phantom - ELI 5.0 11
   4.6 Data Storage and Evaluation 12
   4.6.1 Data Storage 12
   4.6.2 Data Evaluation 13
5. Tissue Simulating Liquids 15
   5.1 Ingredients 16
   5.2 Recipes 16
   5.3 Liquid Depth 17
6. SAR Testing with RF Transmitters 18
   6.1 Conducted Power 18
   6.2 Antenna Location 19
   6.3 Stand-alone SAR Evaluate 20
   6.4 SAR test reduction according to KDB 20
7. System Verification and Validation 21
   7.1 Symmetric Dipoles for System Verification 21
   7.2 Liquid Parameters 22
   7.3 Verification Summary 23
   7.4 Validation Summary 24
8. Test Equipment List 25
9. Measurement Uncertainty 26
10. Measurement Procedure 28
   10.1 Spatial Peak SAR Evaluation 28
   10.2 Area & Zoom Scan Procedures 29
   10.3 Volume Scan Procedures 29
   10.4 SAR Averaged Methods 29
   10.5 Power Drift Monitoring 29
11. SAR Test Results Summary 30
   11.1 Brain Measurement SAR 30
   11.2 Muscle SAR Measurement SAR 31
   11.3 Hot-spot mode Measurement SAR 32
   11.4 Extremity Measurement SAR 32
   11.5 SAR Measurement Variability 32
   11.6 Std. C95.1-1999 RF Exposure Limit 33
12. Conclusion 34
13. References 34
14. SAR Measurement Guidance 34
Appendix A - System Performance Check 35
Appendix B - SAR Measurement Data 39
Appendix C - Calibration 51

©2015 A Test Lab Techno Corp.

1. Summary of Maximum Reported SAR Value

Band	Max. Reported Brain SAR1g (W/Kg) 50% Duty Cycle	Max. Reported Muscle SAR1g (W/Kg) 50% Duty Cycle
FRS	0.28	0.24
GMRS	0.46	0.39

Note: The SAR limit (Head & Body: SAR1g 1.6 W/kg) for General population / Uncontrolled environment is specified in FCC 47 CFR part 2 (2.1093) and ANSI/IEEE C95.1-1999

©2015 A Test Lab Techno Corp.

2. Description of Equipment under Test (EUT)

Applicant	UNIDEN AMERICA CORPORATION	
Applicant Address	3001 Gateway Drive, Suite 130 Irving Texas USA	
Manufacture	On Real Electronics (Shen Zhen) Ltd.	
Manufacture Address	Unit 308, 3/F., Section 3, Block B, MingYou Industrial Products Procurement Center, Bao Yuan Road, Xixiang, Baoan District, Shenzhen, China	
Product Type	Walkie Talkie	
Trade Name	Uniden	
Model Number	GMR2035-2, GMR2050-2C	
Model Different Description	The only difference between these models are color, cosmetic details, model number, packing configuration for marking purpose. Electrical designs(Including software and firmware), PCB layout, Construction design, Physical design, Enclosure are identical between these models.	
FCC ID	AMWON2055	
RF Function	FRS/ GMRS	
Tx Frequency	Band	Operate Frequency (MHz)
	FRS	462.5625 - 462.7125 467.5625 - 467.7125
	GMRS	462.5500 - 462.7250 462.5625 – 462.7125
Device Category	Portable Device	
Antenna Type	FIXED Antenna	
RF Exposure Environment	General population / Uncontrolled environment	
Battery Option	Standard	
Battery (1)	Shenzhen FB Electronic Company Ltd, FB-43AAAJ 1.2V, 300mAh	
Battery (2)	Alkaline Battery, AAA *3PCS 1.5V	
Application Type	Certification	

This wireless portable device has been shown to be capable of compliance for localized specific absorption rate (SAR) for General population / Uncontrolled environment limits specified in Standard C95.1-1999 and had been tested in accordance with the measurement procedures specified in IEEE Std. 1528-2013.

©2015 A Test Lab Techno Corp.

3. Introduction

The A Test Lab Techno Corp. has performed measurements of the maximum potential exposure to the user of **UNIDEN AMERICA CORPORATION Trade Name：Uniden Model(s)：GMR2035-2**. The test procedures, as described in American National Standards, Institute C95.1-1999〔1〕was employed and they specify the maximum exposure limit of 8.0W/kg as averaged over any 1 gram of tissue for occupational portable devices being used within 20cm between user and EUT in the uncontrolled environment. A description of the product and operating configuration, detailed summary of the test results, methodology and procedures used in the equipment used are included within this test report.

3.1 SAR Definition

Specific Absorption Rate (SAR) is defined as the time derivative (rate) of the incremental energy (dw) absorbed by (dissipated in) an incremental mass (dm) contained in a volume element (dv) of a given density (ρ). It is also defined as the rate of RF energy absorption per unit mass at a point in an absorbing body (see Figure 2).

$$\text{SAR} = \frac{d}{dt}\left(\frac{dw}{dm}\right) = \frac{d}{dt}\left(\frac{dw}{\rho dv}\right)$$

Figure 2. **SAR Mathematical Equation**

SAR is expressed in units of Watts per kilogram (W/kg)

$$\text{SAR} = \frac{\sigma E^2}{\rho}$$

Where：

σ = conductivity of the tissue (S/m)

ρ = mass density of the tissue (kg/m^3)

E = RMS electric field strength (V/m)

＊Note：

The primary factors that control rate of energy absorption were found to be the wavelength of the incident field in relations to the dimensions and geometry of the irradiated organism, the orientation of the organism in relation to the polarity of field vectors, the presence of reflecting surfaces, and whether conductive contact is made by the organism with a ground plane〔2〕

©2015 A Test Lab Techno Corp.

4. SAR Measurement Setup

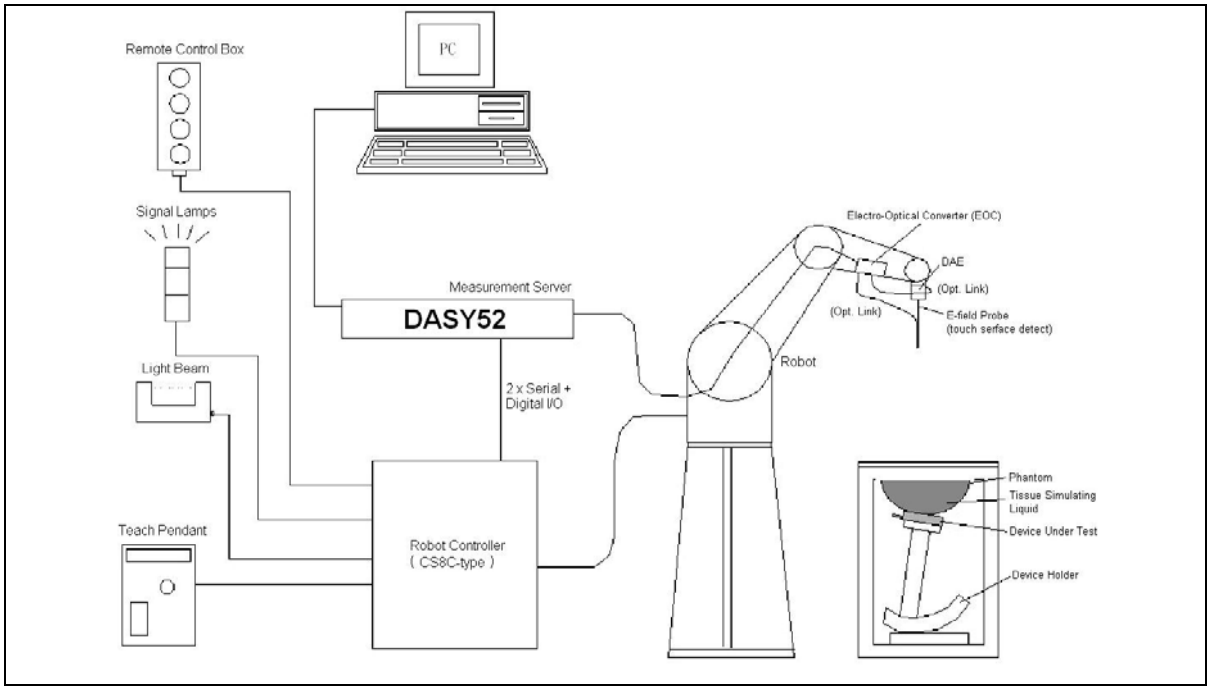

The DASY52 system for performing compliance tests consists of the following items:

1. A standard high precision 6-axis robot (Stäubli TX family) with controller, teach pendant and software. An arm extension for accommodating the data acquisition electronics (DAE).
2. A dosimetric probe, i.e., an isotropic E-field probe optimized and calibrated for usage in tissue simulating liquid. The probe is equipped with an optical surface detector system.
3. A data acquisition electronics (DAE) which performs the signal amplification, signal multiplexing, AD-conversion, offset measurements, mechanical surface detection, collision detection, etc. The unit is battery powered with standard or rechargeable batteries. The signal is optically transmitted to the EOC.
4. The function of the measurement server is to perform the time critical tasks such as signal filtering, control of the robot operation and fast movement interrupts.
5. A probe alignment unit which improves the (absolute) accuracy of the probe positioning.
6. A computer operating Windows 2000 or Windows XP.
7. DASY52 software.
8. Remote controls with teach pendant and additional circuitry for robot safety such as warning lamps, etc.
9. The SAM twin phantom enabling testing left-hand and right-hand usage.
10. The device holder for handheld mobile phones.
11. Tissue simulating liquid mixed according to the given recipes.
12. Validation dipole kits allowing validating the proper functioning of the system.

©2015 A Test Lab Techno Corp.

4.1 DASY E-Field Probe System

The SAR measurements were conducted with the dosimetric probe (manufactured by SPEAG), designed in the classical triangular configuration〔3〕and optimized for dosimetric evaluation. The probes is constructed using the thick film technique; with printed resistive lines on ceramic substrates. The probe is equipped with an optical multi-fiber line ending at the front of the probe tip. It is connected to the EOC box on the robot arm and provides an automatic detection of the phantom surface. Half of the fibers are connected to a pulsed infrared transmitter, the other half to a synchronized receiver. As the probe approaches the surface, the reflection from the surface produces a coupling from the transmitting to the receiving fibers. This reflection increases first during the approach, reaches maximum and then decreases. If the probe is flatly touching the surface, the coupling is zero. The distance of the coupling maximum to the surface is independent of the surface reflectivity and largely independent of the surface to probe angle. The DASY software reads the reflection during a software approach and looks for the maximum using a 2nd order fitting. The approach is stopped when reaching the maximum.

©2015 A Test Lab Techno Corp.

4.1.1 E-Field Probe Specification

Construction	Symmetrical design with triangular core
	Built-in shielding against static charges
	PEEK enclosure material (resistant to organic solvents, e.g., DGBE)
Calibration	ISO/IEC 17025 calibration service available
Frequency	10 MHz to > 6 GHz
	Linearity: ± 0.2 dB (30 MHz to 6 GHz)
Directivity	±0.3 dB in brain tissue (rotation around probe axis)
	±0.5 dB in brain tissue (rotation normal probe axis)
Dimensions	Overall length: 337 mm (Tip: 20 mm)
	Tip diameter: 2.5 mm (Body: 12 mm)
	Typical distance from probe tip to dipole centers: 1 mm

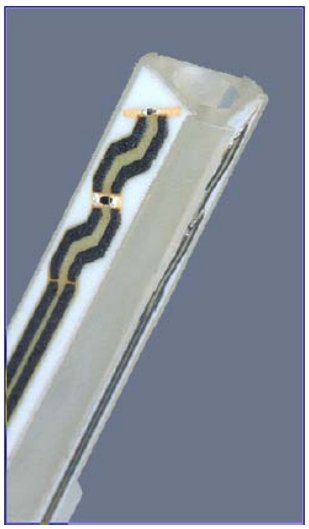

Figure 3. E-field Probe

Figure 4. Probe setup on robot

4.1.2 E-Field Probe Calibration process

Dosimetric Assessment Procedure

Each E-Probe/Probe Amplifier combination has unique calibration parameters. A TEM cell calibration procedure is conducted to determine the proper amplifier settings to enter in the probe parameters. The amplifier settings are determined for a given frequency by subjecting the probe to a known E-field density (1 mW/cm^2) using an RF Signal generator, TEM cell, and RF Power Meter.

Free Space Assessment

The free space E-field from amplified probe outputs is determined in a test chamber. This calibration can be performed in a TEM cell if the frequency is below 1 GHz and in a waveguide or other methodologies above 1 GHz for free space. For the free space calibration, the probe is placed in the volumetric center of the cavity and at the proper orientation with the field. The probe is rotated 360 degrees until the three channels show the maximum reading. The power density readings equates to 1 mW/cm^2.

Temperature Assessment

E-field temperature correlation calibration is performed in a flat phantom filled with the appropriate simulated head tissue. The E-field in the medium correlates with the temperature rise in the dielectric medium. For temperature correlation calibration a RF transparent thermistor-based temperature probe is used in conjunction with the E-field probe.

$$SAR = C\frac{\Delta T}{\Delta t}$$

Where：

Δt = Exposure time (30 seconds),

C = Heat capacity of tissue (head or body),

ΔT = Temperature increase due to RF exposure.

Or $$SAR = \frac{|E|^2 \sigma}{\rho}$$

Where：

σ = Simulated tissue conductivity,

ρ = Tissue density (kg/m^3).

4.2 Data Acquisition Electronic (DAE) System

Model：	DAE3, DAE4
Construction：	Signal amplifier, multiplexer, A/D converter and control logic. Serial optical link for communication with DASY4/5 embedded system (fully remote controlled). Two step probe touch detector for mechanical surface detection and emergency robot stop.
Measurement Range：	-100 to +300 mV (16 bit resolution and two range settings: 4mV, 400mV)
Input Offset Voltage：	< 5μV (with auto zero)
Input Bias Current：	< 50 fA
Dimensions：	60 x 60 x 68 mm

Positioner：	Stäubli Unimation Corp. Robot Model: TX90XL
Repeatability：	±0.02 mm
No. of Axis：	6

4.3 Measurement Server

Processor：	PC/104 with a 400MHz intel ULV Celeron
I/O-board：	Link to DAE4 (or DAE3)
	16-bit A/D converter for surface detection system
	Digital I/O interface
	Serial link to robot
	Direct emergency stop output for robot

©2015 A Test Lab Techno Corp.

4.4 Device Holder

The DASY device holder is constructed of low-loss POM material having the following dielectric parameters: relative permittivity ε=3 and loss tangent δ=0.02. The amount of dielectric material has been reduced in the closest vicinity of the device, since measurements have suggested that the influence of the clamp on the test results could thus be lowered.

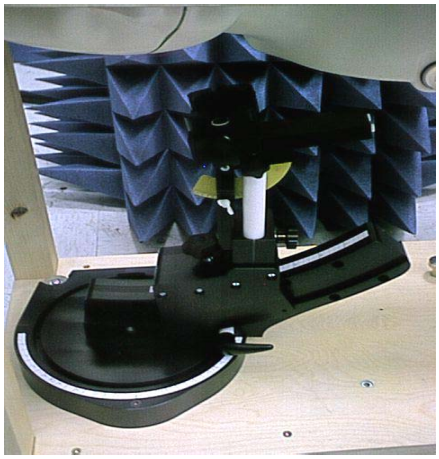

Figure 5. Device Holder

4.5 Oval Flat Phantom - ELI 5.0

The shell corresponds to the specifications of the Specific Anthropomorphic Mannequin (Oval Flat) phantom defined in IEEE 1528-2013, CENELEC 50361 and IEC 62209-2. It enables the dosimetric evaluation of wireless portable device usage as well as body mounted usage at the flat phantom region. A cover prevents evaporation of the liquid. Reference markings on the phantom allow the complete setup of all predefined phantom positions and measurement grids by manually teaching three points with the robot.

Shell Thickness	2 ±0.2 mm
Filling Volume	Approx. 30 liters
Dimensions	190×600×400 mm (H×L×W)

Table 1. Specification of ELI 5.0

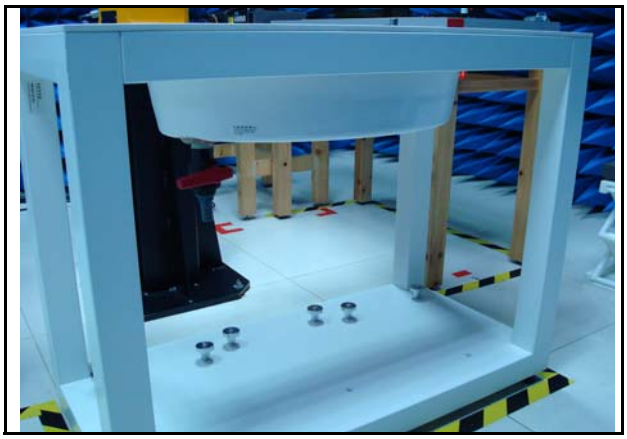

Figure 6. Oval Flat Phantom

4.6 Data Storage and Evaluation

4.6.1 Data Storage

The DASY software stores the assessed data from the data acquisition electronics as raw data (in microvolt readings from the probe sensors), together with all the necessary software parameters for the data evaluation (probe calibration data, liquid parameters and device frequency and modulation data) in measurement files with the extension DA4 or DA52. The post processing software evaluates the desired unit and format for output each time the data is visualized or exported. This allows verification of the complete software setup even after the measurement and allows correction of erroneous parameter settings. For example, if a measurement has been performed with an incorrect crest factor parameter in the device setup, the parameter can be corrected afterwards and the data can be reevaluated.

©2015 A Test Lab Techno Corp.

4.6.2 Data Evaluation

The DASY post processing software (SEMCAD) automatically executes the following procedures to calculate the field units from the microvolt readings at the probe connector. The parameters used in the evaluation are stored in the configuration modules of the software：

Probe parameters：	- Sensitivity	*Normi, ai0, ai1, ai2*
	- Conversion factor	*ConvFi*
	- Diode compression point	*dcpi*
Device parameters：	- Frequency	*f*
	- Crest factor	*cf*
Media parameters：	- Conductivity	*σ*
	- Density	*ρ*

These parameters must be set correctly in the software. They can be found in the component documents or they can be imported into the software from the configuration files issued for the DASY components. In the direct measuring mode of the multimeter option, the parameters of the actual system setup are used. In the scan visualization and export modes, the parameters stored in the corresponding document files are used.
The first step of the evaluation is a linearization of the filtered input signal to account for the compression characteristics of the detector diode. The compensation depends on the input signal, the diode type and the DC-transmission factor from the diode to the evaluation electronics. If the exciting field is pulsed, the crest factor of the signal must be known to correctly compensate for peak power. The formula for each channel can be given as：

$$V_i = U_i + U_i^2 \cdot \frac{cf}{dcp_i}$$

With *Vi* = compensated signal of channel i (i = x, y, z)
Ui = input signal of channel i (i = x, y, z)
cf = crest factor of exciting field (DASY parameter)
dcpi = diode compression point (DASY parameter)

From the compensated input signals the primary field data for each channel can be evaluated：

E-field probes： $$E_i = \sqrt{\frac{V_i}{Norm_i \cdot ConvF}}$$

H-field probes：

$$H_i = \sqrt{V_i} \cdot \frac{a_{i0} + a_{i1} f + a_{i2} f^2}{f}$$

with *Vi* = compensated signal of channel i (i = x, y, z)

Normi = sensor sensitivity of channel i (i = x, y, z)

μV/(V/m)2 for E-field Probes

ConvF = sensitivity enhancement in solution

aij = sensor sensitivity factors for H-field probes

f = carrier frequency [GHz]

Ei = electric field strength of channel i in V/*m*

Hi = magnetic field strength of channel i in A/m

The RSS value of the field components gives the total field strength (Hermitian magnitude)：

$$E_{tot} = \sqrt{E_x^2 + E_y^2 + E_z^2}$$

The primary field data are used to calculate the derived field units.

$$SAR = E_{tot}^2 \cdot \frac{\sigma}{\rho \cdot 1000}$$

with *SAR* = local specific absorption rate in mW/g

Etot = total field strength in V/m

σ = conductivity in [mho/m] or [Siemens/m]

ρ = equivalent tissue density in g/cm3

∗Note：That the density is set to 1, to account for actual head tissue density rather than the density of the tissue simulating liquid.

The power flow density is calculated assuming the excitation field to be a free space field.

$$P_{pwe} = \frac{E_{tot}^2}{3770} \quad \text{or} \quad P_{pwe} = \frac{H_{tot}^2}{37.7}$$

with *Ppwe* = equivalent power density of a plane wave in mW/cm2

Etot = total electric field strength in V/m

Htot = total magnetic field strength in A/m

5. *Tissue Simulating Liquids*

The mixture is calibrated to obtain proper dielectric constant (permittivity) and conductivity of the tissue.
The dielectric parameters of the liquids were verified prior to the SAR evaluation using an 85070C Dielectric Probe Kit and an E5071B Network Analyzer.

IEEE SCC-34/SC-2 in 1528 recommended Tissue Dielectric Parameters

The head tissue dielectric parameters recommended by the IEEE SCC-34/SC-2 in 1528 have been incorporated in the following table. These head parameters are derived from planar layer models simulating the highest expected SAR for the dielectric properties and tissue thickness variations in human head. Other head and body tissue parameters that have not been specified in 1528 are derived from the tissue dielectric parameters computed from the 4-Cole-Cole equation and extrapolated according to the head parameter specified in 1528.

Target Frequency	Head		Body	
(MHz)	εr	σ (S/m)	εr	σ (S/m)
150	52.3	0.76	61.9	0.80
300	45.3	0.87	58.2	0.92
450	43.5	0.87	56.7	0.94
835	41.5	0.90	55.2	0.97
900	41.5	0.97	55.0	1.05
915	41.5	0.98	55.0	1.06
1450	40.5	1.20	54.0	1.30
1610	40.3	1.29	53.8	1.40
1800 - 2000	40.0	1.40	53.3	1.52
2450	39.2	1.80	52.7	1.95
3000	38.5	2.40	52.0	2.73
5800	35.3	5.27	48.2	6.00
(εr = relative permittivity, σ = conductivity and ρ = 1000 kg/m3)				

Table 2. Tissue dielectric parameters for head and body phantoms

5.1 Ingredients

The following ingredients are used:

- Water: deionized water (pure H_20), resistivity ≥ 16 M Ω -as basis for the liquid
- Sugar: refied white sugar (typically 99.7 % sucrose, available as crystal sugar in food shops) -to reduce relative permittivity
- Salt: pure NaCl -to increase conductivity
- Cellulose: Hydroxyethyl-cellulose, medium viscosity (75-125 mPa.s, 2% in water, 20 °C), CAS # 54290 -to increase viscosity and to keep sugar in solution.
- Preservative: Preventol D-7 Bayer AG, D-51368 Leverkusen, CAS # 55965-84-9 -to prevent the spread of bacteria and molds
- DGBE: Diethylenglycol-monobuthyl ether (DGBE), Fluka Chemie GmbH, CAS # 112-34-5 -to reduce relative permittivity

5.2 Recipes

The following tables give the recipes for tissue simulating liquids to be used in different frequency bands.
Note: The goal dielectric parameters (at 22 ℃) must be achieved within a tolerance of ±5% for εand ±5% for σ.

Liquid type	HSL 450 - A	
Ingredient	Weight (g)	Weight (%)
Water	522.94	38.91
Sugar	765.09	56.93
Cellulose	3.39	0.25
Salt	50.94	3.79
Preventol	1.63	0.12
Total amount	1'344.00	100.00
Goal dielectric parameters		
Frequency [MHz]	450	
Relative Permittivity	43.5	
Conductivity [S/m]	0.87	

Liquid type	MSL 450 - B	
Ingredient	Weight (g)	Weight (%)
Water	590.62	46.21
Sugar	654.00	51.17
Cellulose	2.36	0.18
Salt	29.96	2.34
Preventol	1.06	0.08
Total amount	1'278.00	100.00
Goal dielectric parameters		
Frequency [MHz]	450	
Relative Permittivity	56.7	
Conductivity [S/m]	0.94	

©2015 A Test Lab Techno Corp.

5.3 Liquid Depth

According to KDB865664 ,the depth of tissue-equivalent liquid in a phantom must be ≥ 15.0 cm with ≤ ± 0.5 cm variation for SAR measurements ≤ 3 GHz and ≥ 10.0 cm with ≤ ± 0.5 cm variation for measurements > 3 GHz.

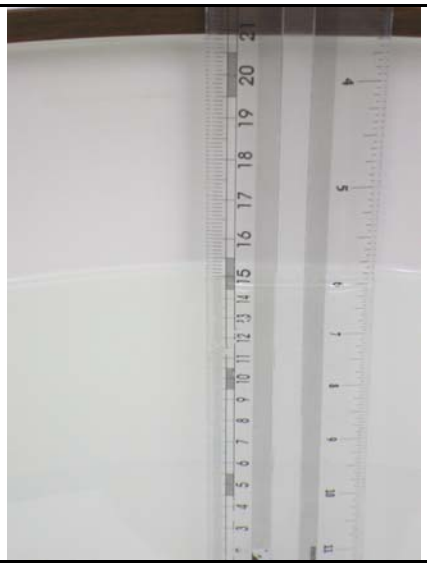

Figure 7. Body-Position

6. SAR Testing with RF Transmitters

6.1 Conducted Power

Usage		Operates with a built-in test mode by client						
EUT Battery		Fully-charged with Ni-MH Battery						
Frequency Band	Channel	Frequency (MHz)	Before SAR Test Time-Avg. (dBm)	After SAR Test Time-Avg. (dBm)	Duty Cycle	Time-Avg.Tune-up Power (dBm)		
						Min.	Nominal	Max.
FRS	11	467.637	25.80	25.60	1	24.80	25.80	26.80
GMRS	4	462.637	26.00	25.65	1	25.00	26.00	26.99

Usage		Operates with a built-in test mode by client						
EUT Battery		Fully-charged with Alkaline Battery						
Frequency Band	Channel	Frequency (MHz)	Before SAR Test Time-Avg. (dBm)	After SAR Test Time-Avg. (dBm)	Duty Cycle	Time-Avg.Tune-up Power (dBm)		
						Min.	Nominal	Max.
FRS	11	467.637	25.80	25.68	1	24.80	25.80	26.80
GMRS	4	462.637	26.00	25.71	1	25.00	26.00	26.99

©2015 A Test Lab Techno Corp.

6.2 Antenna Location

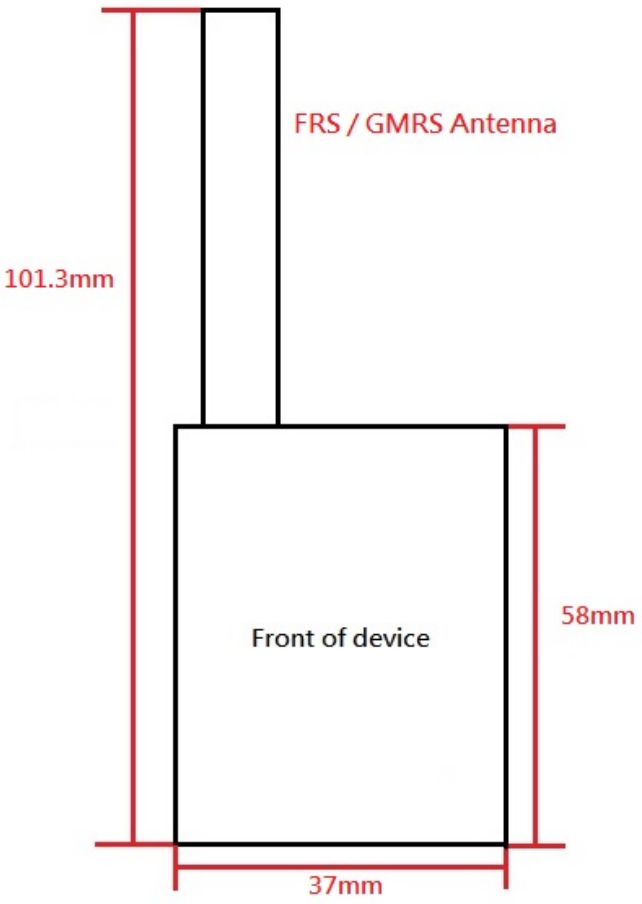

6.3 Stand-alone SAR Evaluate

Transmitter and antenna implementation as below:

Band	GMRS Antenna	FRS Antenna
FRS	---	V
GMRS	V	---

Stand-alone transmission configurations as below:

Band	Front	Back
FRS	V	V
GMRS	V	V

6.4 SAR test reduction according to KDB

General:

- The test data reported are the worst-case SAR value with the position set in a typical configuration. Test procedures used were according to IEEE1528-2013.
- All modes of operation were investigated, and worst-case results are reported.
- Tissue parameters and temperatures are listed on the SAR plots.
- Batteries are fully charged for all readings.

KDB 447498:

- The test data reported are the worst-case SAR value with the position set in a typical configuration. Test procedures used were according to IEEE1528-2013.

KDB 865664:

- Repeated measurement is not required when the original highest measured SAR is < 0.80 W/kg.
- When the original highest measured SAR is ≥ 0.80 W/kg, repeat that measurement once.
- Perform a second repeated measurement only if the ratio of largest to smallest SAR for the original and first repeated measurements is > 1.20 or when the original or repeated measurement is ≥ 1.45 W/kg.
- Perform a third repeated measurement only if the original, first or second repeated measurement is ≥ 1.5 W/kg and the ratio of largest to smallest SAR for the original, first and second repeated measurements is > 1.20.

©2015 A Test Lab Techno Corp.

7. System Verification and Validation

7.1 Symmetric Dipoles for System Verification

Construction	Symmetrical dipole with l/4 balun enables measurement of feed point impedance with NWA matched for use near flat phantoms filled with head simulating solutions Includes distance holder and tripod adaptor Calibration Calibrated SAR value for specified position and input power at the flat phantom in head simulating solutions.
Frequency	450 MHz
Return Loss	> 20 dB at specified verification position
Power Capability	> 100 W (f < 1GHz); > 40 W (f > 1GHz)
Options	Dipoles for other frequencies or solutions and other calibration conditions are available upon request
Dimensions	D450V2：dipole length 270 mm; overall height 330 mm

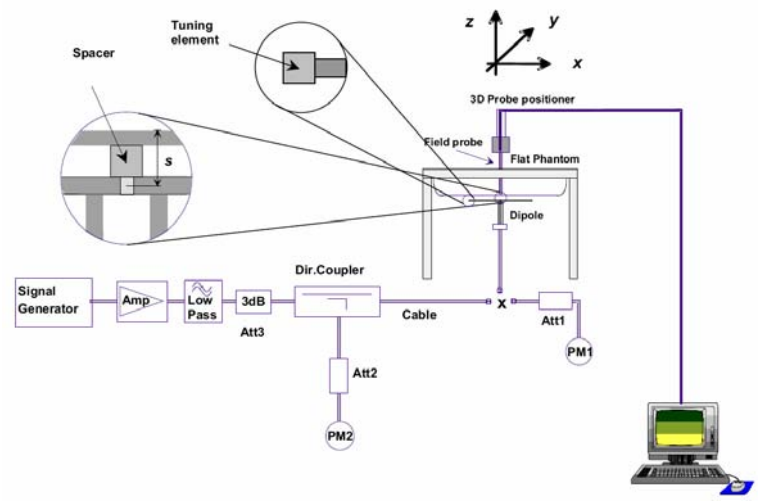

Figure 8. System Verification Setup Diagram

Figure 9. Validation Kit

7.2 Liquid Parameters

Liquid Verify								
Ambient Temperature： 22 ± 2 °C；Relative Humidity：40 -70%								
Liquid Type	Frequency	Temp (°C)	Parameters	Target Value	Measured Value	Deviation (%)	Limit (%)	Measured Date
450MHz (Head)	450MHz	22.0	εr	43.50	43.70	0.46%	± 5%	Aug. 19, 2015
			σ	0.870	0.870	0.00%	± 5%	
	463MHz	22.0	εr	43.43	43.49	0.14%	± 5%	
			σ	0.871	0.882	1.26%	± 5%	
	468MHz	22.0	εr	43.40	43.38	-0.05%	± 5%	
			σ	0.871	0.887	1.84%	± 5%	
450MHz (Body)	450MHz	22.0	εr	56.70	58.41	3.02%	± 5%	Aug. 19, 2015
			σ	0.940	0.938	-0.21%	± 5%	
	463MHz	22.0	εr	56.65	58.33	2.97%	± 5%	
			σ	0.941	0.949	0.85%	± 5%	
	468MHz	22.0	εr	56.63	58.30	2.95%	± 5%	
			σ	0.941	0.954	1.38%	± 5%	
450MHz (Head)	450MHz	22.0	εr	43.50	43.70	0.46%	± 5%	Oct. 26, 2015
			σ	0.870	0.870	0.00%	± 5%	
	463MHz	22.0	εr	43.43	43.49	0.14%	± 5%	
			σ	0.871	0.882	1.26%	± 5%	
	468MHz	22.0	εr	43.40	43.38	-0.05%	± 5%	
			σ	0.871	0.887	1.84%	± 5%	
450MHz (Body)	450MHz	22.0	εr	56.70	58.41	3.02%	± 5%	Oct. 24, 2015
			σ	0.940	0.938	-0.21%	± 5%	
	463MHz	22.0	εr	56.65	58.33	2.97%	± 5%	
			σ	0.941	0.949	0.85%	± 5%	
	468MHz	22.0	εr	56.63	58.30	2.95%	± 5%	
			σ	0.941	0.954	1.38%	± 5%	

Table 3. Measured Tissue dielectric parameters for head and body phantoms

©2015 A Test Lab Techno Corp.

7.3 Verification Summary

Prior to the assessment, the system validation kit was used to test whether the system was operating within its specifications of ± 7%. The verification was performed at 450MHz.

Mixture Type	Frequency (MHz)	Power	SAR_{1g} (W/Kg)	SAR_{10g} (W/Kg)	Drift (dB)	Difference percentage		Probe	Dipole	1W Target		Date
						1g	10g	Model / Serial No.	Model / Serial No.	SAR_{1g} (W/Kg)	SAR_{10g} (W/Kg)	
Head	450	250 mW	1.16	0.777	-0.04	-3.3%	-2.6%	EX3DV4 SN: 3977	D450V2 SN:1021	4.80	3.19	Aug. 19, 2015
		Normalize to 1 Watt	4.64	3.11								
Head	450	250 mW	1.15	0.776	-0.01	-4.2%	-2.7%	EX3DV4 SN: 3977	D450V2 SN:1021	4.80	3.19	Oct. 26, 2015
		Normalize to 1 Watt	4.60	3.10								
Body	450	250 mW	1.13	0.76	-0.03	-3.6%	-1.3%	EX3DV4 SN: 3977	D450V2 SN:1021	4.69	3.08	Aug. 19, 2015
		Normalize to 1 Watt	4.52	3.04								
Body	450	250 mW	1.12	0.759	-0.01	-4.5%	-1.4%	EX3DV4 SN: 3977	D450V2 SN:1021	4.69	3.08	Oct. 24, 2015
		Normalize to 1 Watt	4.48	3.04								

©2015 A Test Lab Techno Corp.

7.4 Validation Summary

Per FCC KDB 865664 D02v01r02, SAR system validation status should be documented to confirm measurement accuracy. The SAR systems (including SAR probes, system components and software versions) used for this device were validated against its performance specifications prior to the SAR measurements. Reference dipoles were used with the required tissue- equivalent media for system validation, according to the procedures outlined in IEEE 1528-2013 and FCC KDB 865664 D01v01r04. Since SAR probe calibrations are frequency dependent, each probe calibration point was validated at a frequency within the valid frequency range of the probe calibration point, using the system that normally operates with the probe for routine SAR measurements and according to the required tissue-equivalent media.

A tabulated summary of the system validation status including the validation date(s), measurement frequencies, SAR probes and tissue dielectric parameters as below.

Probe Type Model / Serial No.	Prob Cal. Point (MHz)	Head / Body	Cond.	Perm.	CW Validation			Mod. Validation			Date
			εr	σ	Sensitivity	Probe Linearity	Probe Isotropy	Mod. Type	Duty Factor	PAR	
EX3DV4 SN: 3977	450	Head	43.70	0.870	Pass	Pass	Pass	FM	Pass	N/A	Aug. 19, 2015
EX3DV4 SN: 3977	463	Head	43.49	0.882	Pass	Pass	Pass	FM	Pass	N/A	Aug. 19, 2015
EX3DV4 SN: 3977	468	Head	43.38	0.887	Pass	Pass	Pass	FM	Pass	N/A	Aug. 19, 2015
EX3DV4 SN: 3977	450	Head	43.70	0.870	Pass	Pass	Pass	FM	Pass	N/A	Oct. 26, 2015
EX3DV4 SN: 3977	463	Head	43.49	0.882	Pass	Pass	Pass	FM	Pass	N/A	Oct. 26, 2015
EX3DV4 SN: 3977	468	Head	43.38	0.887	Pass	Pass	Pass	FM	Pass	N/A	Oct. 26, 2015
EX3DV4 SN: 3977	450	Body	58.41	0.938	Pass	Pass	Pass	FM	Pass	N/A	Aug. 19, 2015
EX3DV4 SN: 3977	463	Body	58.33	0.949	Pass	Pass	Pass	FM	Pass	N/A	Aug. 19, 2015
EX3DV4 SN: 3977	468	Body	58.30	0.954	Pass	Pass	Pass	FM	Pass	N/A	Aug. 19, 2015
EX3DV4 SN: 3977	450	Body	58.41	0.938	Pass	Pass	Pass	FM	Pass	N/A	Oct. 24, 2015
EX3DV4 SN: 3977	463	Body	58.33	0.949	Pass	Pass	Pass	FM	Pass	N/A	Oct. 24, 2015
EX3DV4 SN: 3977	468	Body	58.30	0.954	Pass	Pass	Pass	FM	Pass	N/A	Oct. 24, 2015

©2015 A Test Lab Techno Corp.

8. Test Equipment List

Manufacturer	Name of Equipment	Type/Model	Serial Number	Calibration	
				Last Cal.	Due Date
SPEAG	450MHz System Validation Kit	D450V2	1021	Apr. 24, 2015	Apr. 24, 2016
SPEAG	Dosimetric E-Field Probe	EX3DV4	3977	Apr. 30, 2015	Apr. 30, 2016
SPEAG	Data Acquisition Electronics	DAE4	541	Feb. 03, 2015	Feb. 03, 2016
SPEAG	Device Holder	N/A	N/A	NCR	
SPEAG	Measurement Server	SE UMS 011 AA	1025	NCR	
SPEAG	Phantom	ELI V5.0	TP-1133	NCR	
SPEAG	Robot	Staubli TX90XL	F07/564ZA1/C/01	NCR	
SPEAG	Software	DASY52 V52.8 (8)	N/A	NCR	
SPEAG	Software	SEMCAD X V14.6.10 (7331)	N/A	NCR	
Agilent	Dielectric Probe Kit	85070C	US99360094	NCR	
Agilent	ENA Series Network Analyzer	E5071B	MY42404655	Apr. 10, 2014	Apr. 10, 2016
R&S	Power Sensor	NRP-Z22	100179	Jun. 01, 2015	Jun. 01, 2016
Agilent	MXG Vector Signal Generator	N5182B	MY53050382	May 28, 2015	May 28, 2016
Agilent	Power Sensor	8481H	3318A20779	Jun. 15, 2015	Jun. 15, 2016
Agilent	Power Meter	EDM Series E4418B	GB40206143	Jun. 15, 2015	Jun. 15, 2016
Anritsu	Power Meter	ML2495A	1135009	Aug. 24, 2015	Aug. 24, 2016
Agilent	Dual Directional Coupler	778D	50334	NCR	
Mini-Circuits	Power Amplifier	ZHL-42W-SMA	D111103#5	NCR	
Mini-Circuits	Power Amplifier	ZVE-8G-SMA	D042005 671800514	NCR	
Aisi	Attenuator	IEAT 3dB	N/A	NCR	

Table 4. Test Equipment List

©2015 A Test Lab Techno Corp.

9. Measurement Uncertainty

IEC62209-1/IEEE 1528:2013

Item	Uncertainty Component	Uncertainty Value	Prob. Dist	Div.	c_i (1g)	c_i (10g)	Std. Unc. (1-g)	Std. Unc. (10-g)	v_i or V_{eff}
Measurement System									
u1	Probe Calibration (k=1)	±6.7%	Normal	1	1	1	±6.7%	±6.7%	∞
u2	Axial Isotropy	±4.7%	Rectangular	$\sqrt{3}$	0.7	0.7	±1.9%	±1.9%	∞
u3	Hemispherical Isotropy	±9.6%	Rectangular	$\sqrt{3}$	0.7	0.7	±3.9%	±3.9%	
u4	Boundary Effect	±1.0%	Rectangular	$\sqrt{3}$	1	1	±0.6%	±0.6%	∞
u5	Linearity	±4.7%	Rectangular	$\sqrt{3}$	1	1	±2.7%	±2.7%	∞
u6	System Detection Limit	±1.0%	Rectangular	$\sqrt{3}$	1	1	±0.6%	±0.6%	∞
u7	Readout Electronics	±0.3%	Normal	1	1	1	±0.3%	±0.3%	∞
u8	Response Time	±0.8%	Rectangular	$\sqrt{3}$	1	1	±0.5%	±0.5%	∞
u9	Integration Time	±1.9%	Rectangular	$\sqrt{3}$	1	1	±1.1%	±1.1%	∞
u10	RF Ambient Conditions	±3.0%	Rectangular	$\sqrt{3}$	1	1	±1.7%	±1.7%	∞
u11	RF Ambient Reflections	±3.0%	Rectangular	$\sqrt{3}$	1	1	±1.7%	±1.7%	∞
u12	Probe Positioner Mechanical Tolerance	±0.4%	Rectangular	$\sqrt{3}$	1	1	±0.2%	±0.2%	∞
u13	Probe Positioning with respect to Phantom Shell	±2.9%	Rectangular	$\sqrt{3}$	1	1	±1.7%	±1.7%	∞
u14	Extrapolation, interpolation and integration Algorithms for Max. SAR Evaluation	±1.0%	Rectangular	$\sqrt{3}$	1	1	±0.6%	±0.6%	∞
Test sample Related									
u15	Test sample Positioning	±3.6%	Normal	1	1	1	±3.6%	±3.6%	∞
u16	Device Holder Uncertainty	±2.7%	Normal	1	1	1	±2.7%	±2.7%	∞
u17	Output Power Variation - SAR drift measurement	±5.0%	Rectangular	$\sqrt{3}$	1	1	±2.9%	±2.9%	∞
Phantom and Tissue Parameters									
u18	Phantom Uncertainty (shape and thickness tolerances)	±4.0%	Rectangular	$\sqrt{3}$	1	1	±2.3%	±2.3%	∞
u19	Liquid Conductivity - deviation from target values	±5.0%	Rectangular	$\sqrt{3}$	0.64	0.43	±1.8%	±1.2%	∞
u20	Liquid Conductivity - measurement uncertainty	±2.5%	Normal	1	0.64	0.43	±1.6%	±1.08%	∞
u21	Liquid Permittivity - deviation from target values	±5.0%	Rectangular	$\sqrt{3}$	0.6	0.49	±1.7%	±1.4%	∞
u22	Liquid Permittivity - measurement uncertainty	±2.5%	Normal	1	0.6	0.49	±1.5%	±1.23%	∞
Combined standard uncertainty			RSS				±10.58%	±10.15%	∞
Expanded uncertainty (95% CONFIDENCE LEVEL)			k=2				±21.15%	±20.31%	

Table 5. Uncertainty Budget for frequency range 300MHz to 3GHz

©2015 A Test Lab Techno Corp.

Item	Uncertainty Component	Uncertainty Value	Prob. Dist	Div.	c_i (1g)	c_i (10g)	Std. Unc. (1-g)	Std. Unc. (10-g)	v_i or V_{eff}
Measurement System									
u1	Probe Calibration (k=1)	±6.7%	Normal	1	1	1	±6.7%	±6.7%	∞
u2	Axial Isotropy	±4.7%	Rectangular	$\sqrt{3}$	0.7	0.7	±1.9%	±1.9%	∞
u3	Hemispherical Isotropy	±9.6%	Rectangular	$\sqrt{3}$	0.7	0.7	±3.9%	±3.9%	
u4	Boundary Effect	±2.0%	Rectangular	$\sqrt{3}$	1	1	±1.2%	±1.2%	∞
u5	Linearity	±4.7%	Rectangular	$\sqrt{3}$	1	1	±2.7%	±2.7%	∞
u6	System Detection Limit	±1.0%	Rectangular	$\sqrt{3}$	1	1	±0.6%	±0.6%	∞
u7	Readout Electronics	±0.3%	Normal	1	1	1	±0.3%	±0.3%	∞
u8	Response Time	±0.8%	Rectangular	$\sqrt{3}$	1	1	±0.5%	±0.5%	∞
u9	Integration Time	±1.9%	Rectangular	$\sqrt{3}$	1	1	±1.1%	±1.1%	∞
u10	RF Ambient Conditions	±3.0%	Rectangular	$\sqrt{3}$	1	1	±1.7%	±1.7%	∞
u11	RF Ambient Reflections	±3.0%	Rectangular	$\sqrt{3}$	1	1	±1.7%	±1.7%	∞
u12	Probe Positioner Mechanical Tolerance	±0.8%	Rectangular	$\sqrt{3}$	1	1	±0.5%	±0.5%	∞
u13	Probe Positioning with respect to Phantom Shell	±6.7%	Rectangular	$\sqrt{3}$	1	1	±3.9%	±3.9%	∞
u14	Extrapolation, interpolation and integration Algorithms for Max. SAR Evaluation	±1.0%	Rectangular	$\sqrt{3}$	1	1	±0.6%	±0.6%	∞
Test sample Related									
u15	Test sample Positioning	±3.6%	Normal	1	1	1	±3.6%	±3.6%	∞
u16	Device Holder Uncertainty	±2.7%	Normal	1	1	1	±2.7%	±2.7%	∞
u17	Output Power Variation - SAR drift measurement	±5.0%	Rectangular	$\sqrt{3}$	1	1	±2.9%	±2.9%	∞
Phantom and Tissue Parameters									
u18	Phantom Uncertainty (shape and thickness tolerances)	±4.0%	Rectangular	$\sqrt{3}$	1	1	±2.3%	±2.3%	∞
u19	SAR correction	±1.9%	Rectangular	$\sqrt{3}$	1	0.84	±1.11%	±0.9%	∞
u20	Liquid Conductivity – deviation from target values	±5.0%	Rectangular	$\sqrt{3}$	0.64	0.43	±1.8%	±1.2%	∞
u21	Liquid Conductivity – measurement uncertainty	±2.5%	Normal	1	0.64	0.43	±1.6%	±1.08%	∞
u22	Liquid Permittivity - deviation from target values	±5.0%	Rectangular	$\sqrt{3}$	0.64	0.43	±1.8%	±1.2%	∞
u23	Liquid Permittivity - measurement uncertainty	±2.5%	Normal	1	0.64	0.43	±1.6%	±1.08%	∞
u24	Temp.Unc.- Conductivity	±3.4%	Rectangular	$\sqrt{3}$	0.78	0.71	±1.5%	±1.4%	∞
u25	Temp.Unc.- Permittivity	±0.4%	Normal	$\sqrt{3}$	0.23	0.26	±0.1%	±0.1%	∞
Combined standard uncertainty			RSS				±12.08%	±11.44%	∞
Expanded uncertainty (95% CONFIDENCE LEVEL)			k=2				±24.16%	±22.88%	

Table 6. Uncertainty Budget for frequency range 300MHz to 3GHz

©2015 A Test Lab Techno Corp.

10. Measurement Procedure

The measurement procedures are as follows:

1. Measure output power through RF cable and power meter
2. Set scan area, grid size and other setting on the DASY software
3. Find out the largest SAR result on these testing positions of each band

According to the test standard, the recommended procedure for assessing the peak spatial-average SAR value consists of the following steps:

1. Power reference measurement
2. Area scan
3. Zoom scan
4. Power drift measurement

10.1 Spatial Peak SAR Evaluation

The procedure for spatial peak SAR evaluation has been implemented according to the test standard. It can be conducted for 1g and 10g, as well as for user-specific masses. The DASY software includes all numerical procedures necessary to evaluate the spatial peak SAR value.
The base for the evaluation is a "cube" measurement. The measured volume must include the 1g and 10g cubes with the highest averaged SAR values. For that purpose, the center of the measured volume is aligned to the interpolated peak SAR value of a previously performed area scan.
The entire evaluation of the spatial peak values is performed within the post-processing engine (SEMCAD). The system always gives the maximum values for the 1g and 10g cubes. The algorithm to find the cube with highest averaged SAR is divided into the following stages

1. Extraction of the measured data (grid and values) from the Zoom Scan
2. Calculation of the SAR value at every measurement point based on all stored data (A/D values and measurement parameters)
3. Generation of a high-resolution mesh within the measured volume
4. Interpolation of all measured values form the measurement grid to the high-resolution grid
5. Extrapolation of the entire 3-D field distribution to the phantom surface over the distance from sensor to surface
6. Calculation of the averaged SAR within masses of 1g and 10g

©2015 A Test Lab Techno Corp.

10.2 Area & Zoom Scan Procedures

First Area Scan is used to locate the approximate location(s) of the local peak SAR value(s). The measurement grid within an Area Scan is defined by the grid extent, grid step size and grid offset. Next, in order to determine the EM field distribution in a three-dimensional spatial extension, Zoom Scan is required. The Zoom Scan measures points and step size follow as below. The Zoom Scan is performed around the highest E-field value to determine the averaged SAR-distribution over 10 g.

Grid Type	Frequency		Step size (mm)			X*Y*Z (Point)	Cube size			Step size		
			X	Y	Z		X	Y	Z	X	Y	Z
uniform grid	≦ 3GHz	≦2GHz	≤ 8	≤ 8	≤ 5	5*5*7	32	32	30	8	8	5
		2G - 3G	≤ 5	≤ 5	≤ 5	7*7*7	30	30	30	5	5	5
	3 - 6GHz	3 - 4GHz	≤ 5	≤ 5	≤ 4	7*7*8	30	30	28	5	5	4
		4 - 5GHz	≤ 4	≤ 4	≤ 3	8*8*10	28	28	27	4	4	3
		5 - 6GHz	≤ 4	≤ 4	≤ 2	8*8*12	28	28	22	4	4	2

(Our measure settings are refer KDB Publication 865664 D01v01r04)

10.3 Volume Scan Procedures

The volume scan is used for assess overlapping SAR distributions for antennas transmitting in different frequency bands. It is equivalent to an oversized zoom scan used in standalone measurements. The measurement volume will be used to enclose all the simultaneous transmitting antennas. For antennas transmitting simultaneously in different frequency bands, the volume scan is measured separately in each frequency band. In order to sum correctly to compute the 1g aggregate SAR, the DUT remain in the same test position for all measurements and all volume scan use the same spatial resolution and grid spacing. When all volume scan were completed, the software, SEMCAD postprocessor can combine and subsequently superpose these measurement data to calculating the multiband SAR.

10.4 SAR Averaged Methods

In DASY, the interpolation and extrapolation are both based on the modified Quadratic Shepard's method. The interpolation scheme combines a least-square fitted function method and a weighted average method which are the two basic types of computational interpolation and approximation. Extrapolation routines are used to obtain SAR values between the lowest measurement points and the inner phantom surface. The extrapolation distance is determined by the surface detection distance and the probe sensor offset. The uncertainty increases with the extrapolation distance. To keep the uncertainty within 1% for the 1 g and 10 g cubes, the extrapolation distance should not be larger than 5 mm.

10.5 Power Drift Monitoring

All SAR testing is under the DUT install full charged battery and transmit maximum output power. In DASY measurement software, the power reference measurement and power drift measurement procedures are used for monitoring the power drift of DUT during SAR test. Both these procedures measure the field at a specified reference position before and after the SAR testing. The software will calculate the field difference in dB. If the power drift more than 5%, the SAR will be retested.

©2015 A Test Lab Techno Corp.

11. SAR Test Results Summary

Note :The combinations of belt clip and battery tested on back surface on FRS and GMRS.

11.1 Brain Measurement SAR

Index.	Test Position	Band	Ch.	Spacing (mm)	Battery	ASSY	SAR 1g (W/Kg)	Power Drift	Time Avg Power	Max tune-up	Reported SAR 1g (W/Kg)
#2	Front	FRS	11	25	Ni-MH	N/A	0.155	-0.10	25.60	26.80	0.20
#4	Front	GMRS	4	25	Ni-MH	N/A	0.361	-0.16	25.65	26.99	0.49
#5	Front	FRS	11	25	Alkaline	N/A	0.426	-0.15	25.68	26.80	0.55
#6	Front	GMRS	4	25	Alkaline	N/A	0.653	-0.18	25.71	26.99	0.88

Note 1:The combinations of belt clip and battery tested on back surface on FRS and GMRS.

◆ **SAR values are scaled for the power drift**

Band	Ch.	Battery	ASSY.	SAR_{1g}[W/Kg]		power drift (dB)	+ power drift 10^(dB/10)	SAR_{1g}[W/Kg] (include +power drift)		Remark
				Duty Cycle				Duty Cycle		
				100%	50%			100%	50%	
FRS	11	Ni-MH	N/A	0.20	0.1000	-0.10	1.023	0.205	0.10	---
GMRS	4	Ni-MH	N/A	0.49	0.2450	-0.16	1.038	0.508	0.25	---
FRS	11	Alkaline	N/A	0.55	0.2750	-0.15	1.035	0.569	0.28	---
GMRS	4	Alkaline	N/A	0.88	0.4400	-0.18	1.042	0.917	0.46	---

SAR is basically proportional to average transmit power and duty cycle

(i.e. SAR = P x T where P is the average transmit power and T is the transmit duty cycle).

SAR(unknown) = SAR(know) x (PxTx/P(known) T(known))

Where Px is the unknown power (i.e. the power at the highest drift)

Tx is the transmit duty cycle used at that unknown power.

If transmitter duty cycle is the same then it should be a relationship of Px/Pknown)

©2015 A Test Lab Techno Corp.

11.2 Muscle SAR Measurement SAR

Index.	Test Position	Band	Ch.	Spacing (mm)	Battery	ASSY	SAR $_{1g}$ (W/Kg)	Power Drift	Time Avg Power	Max tune-up	Reported SAR $_{1g}$ (W/Kg)
#6	Back	FRS	11	10	Ni-MH	N/A	0.217	-0.13	25.60	26.80	0.29
#10	Back	FRS	11	0	Ni-MH	Belt clip	0.179	-0.12	25.60	26.80	0.24
#8	Back	GMRS	4	10	Ni-MH	N/A	0.340	-0.17	25.65	26.99	0.46
#12	Back	GMRS	4	0	Ni-MH	Belt clip	0.348	-0.15	25.65	26.99	0.47
#1	Back	FRS	11	10	Alkaline	N/A	0.351	-0.16	25.68	26.80	0.45
#2	Back	FRS	11	0	Alkaline	Belt clip	0.322	-0.03	25.68	26.80	0.42
#3	Back	GMRS	4	10	Alkaline	N/A	0.572	-0.10	25.71	26.99	0.77
#4	Back	GMRS	4	0	Alkaline	Belt clip	0.561	-0.09	25.71	26.99	0.75

Note 1:The combinations of belt clip and battery tested on back surface on FRS and GMRS.

◆ **SAR values are scaled for the power drift**

Band	Ch.	Battery	ASSY.	SAR_{1g}[W/Kg]		power drift (dB)	+ power drift 10^(dB/10)	SAR_{1g}[W/Kg] (include +power drift)		Remark
				Duty Cycle				Duty Cycle		
				100%	50%			100%	50%	
FRS	11	Ni-MH	N/A	0.29	0.1430	-0.13	1.030	0.295	0.15	---
	11	Ni-MH	Belt clip	0.24	0.1180	-0.12	1.028	0.243	0.12	---
GMRS	4	Ni-MH	N/A	0.46	0.2315	-0.17	1.040	0.481	0.24	---
	4	Ni-MH	Belt clip	0.47	0.2370	-0.15	1.035	0.491	0.25	---
FRS	11	Alkaline	N/A	0.45	0.2270	-0.16	1.038	0.471	0.24	---
	11	Alkaline	Belt clip	0.42	0.2085	-0.03	1.007	0.420	0.21	---
GMRS	4	Alkaline	N/A	0.77	0.3840	-0.10	1.023	0.786	0.39	---
	4	Alkaline	Belt clip	0.75	0.3765	-0.09	1.021	0.769	0.38	---

SAR is basically proportional to average transmit power and duty cycle

(i.e. SAR = P x T where P is the average transmit power and T is the transmit duty cycle).

SAR(unknown) = SAR(know) x (PxTx/P(known) T(known))

Where Px is the unknown power (i.e. the power at the highest drift)

Tx is the transmit duty cycle used at that unknown power.

If transmitter duty cycle is the same then it should be a relationship of Px/Pknown)

©2015 A Test Lab Techno Corp.

11.3 Hot-spot mode Measurement SAR

Hot-spot SAR is not available.

11.4 Extremity Measurement SAR

Evaluated extremity SAR is not available.

11.5 SAR Measurement Variability

Detailed evaluations please refer KDB 865664 on "SAR test reduction according to KDB" section.
SAR Measurement Variability is not available.

©2015 A Test Lab Techno Corp.

11.6 Std. C95.1-1999 RF Exposure Limit

Human Exposure	Population Uncontrolled Exposure (W/kg) or (mW/g)	Occupational Controlled Exposure (W/kg) or (mW/g)
Spatial Peak SAR* (head)	1.60	8.00
Spatial Peak SAR** (Whole Body)	0.08	0.40
Spatial Peak SAR*** (Partial-Body)	1.60	8.00
Spatial Peak SAR**** (Hands / Feet / Ankle / Wrist)	4.00	20.00

Table 7. Safety Limits for Partial Body Exposure

Notes：

* The Spatial Peak value of the SAR averaged over any 1 gram of tissue.
(defined as a tissue volume in the shape of a cube) and over the appropriate averaging time.

** The Spatial Average value of the SAR averaged over the whole – body.

*** The Spatial Average value of the SAR averaged over the partial – body.

**** The Spatial Peak value of the SAR averaged over any 10 grams of tissue.
(defined as a tissue volume in the shape of a cube) and over the appropriate averaging time.

Population / Uncontrolled Environments：are defined as locations where there is the exposure of individuals who have no knowledge or control of their exposure.

Occupational / Controlled Environments：are defined as locations where there is exposure that may be incurred by persons who are aware of the potential for exposure, (i.e. as a result of employment or occupation).

©2015 A Test Lab Techno Corp.

12. Conclusion

The SAR test values found for the portable mobile Occupatinal PTT Radios **UNIDEN AMERICA CORPORATION Trade Name：Uniden Model(s)：GMR2035-2** is below the maximum recommended level of 1.6 W/kg.

13. References

[1] Std. C95.1-1999, "*American National Standard safety levels with respect to human exposure to radio frequency electromagnetic fields, 300KHz to 100GHz",* New York.

[2] NCRP, National Council on Radiation Protection and Measurements, "Biological Effects and Exposure Criteria for Radio frequency Electromagnetic Fields", NCRP report NO. 86, 1986.

[3] T. Schmid, O. Egger, and N. Kuster, "Automatic E-field scanning system for dosimetric assessments", IEEE Transactions on Microwave Theory and Techniques, vol. 44, pp, 105-113, Jan. 1996.

[4] K. Pokovi ̌c, T. Schmid, and N. Kuster, "Robust setup for precise calibration of E-field probes in tissue simulating liquids at mobile communications frequency", in ICECOM'97, Dubrovnik, October 15-17, 1997, pp.120-124.

[5] K. Pokovi ̌c, T. Schmid, and N. Kuster, "E-field probe with improved isotropy in brain simulating liquids", in Proceedings of the ELMAR, Zadar, Croatia, 23-25 June, 1996, pp.172-175.

[6] N. Kuster, and Q. Balzano, "Energy absorption mechanism by biological bodies in the near field of dipole antennas above 300MHz", IEEE Transaction on Vehicular Technology, vol. 41, no. 1, Feb. 1992, pp. 17-23.

[7] Robert J. Renka, "Multivariate Interpolation Of Large Sets Of Scattered Data", University of North Texas ACM Transactions on Mathematical Software, vol. 14, no. 2, June 1988 , pp. 139-148.

[8] N. Kuster, R. Kastle, T. Schmid, Dosimetric evaluation of mobile communications equipment with known precision, IEEE Transaction on Communications, vol. E80-B, no. 5, May 1997, pp. 645-652.

[9] Std. C95.3-1991, "IEEE Recommended Practice for the Measurement of Potentially Hazardous Electromagnetic Fields – RF and Microwave, New York: IEEE, Aug. 1992.

[10] CENELEC CLC/SC111B, European Prestandard (prENV 50166-2), Human Exposure to Electromagnetic Fields High-frequency: 10KHz-300GHz, Jan. 1995.

[11] IEEE Std 1528™-2013 - IEEE Recommended Practice for Determining the Peak Spatial-Average Specific Absorption Rate (SAR) in the Human Head From Wireless Communications Devices: Measurement Techniques

14. SAR Measurement Guidance

[1] KDB 865664 D01 SAR measurement 100 MHz to 6 GHz v01r04

[2] KDB 865664 D02 RF Exposure Reporting v01r02

[3] KDB 447498 D01 General RF Exposure Guidance v06

©2015 A Test Lab Techno Corp.

Appendix A - System Performance Check

Test Laboratory: A Test Lab Techno Corp.
Date: 2015/8/19Time: PM 03:36:58

System Performance Check at 450MHz_20150821_Head

DUT: Dipole 450MHz;Type: D450V2;Serial: D450V2 SN:1021

Communication System: UID 0, CW (0);Frequency: 450 MHz;Duty Cycle: 1:1
Medium parameters used: f = 450 MHz; σ = 0.87 S/m; ε_r = 43.701; ρ = 1000 kg/m^3
Phantom section: Flat Section
Measurement Standard: DASY5 (IEEE 1528-2013)
DASY Configuration:

- Area Scan setting - Find Secondary Maximum Within:2.0dB and with a peak SAR value greater than 0.5 W/Kg
- Probe: EX3DV4 - SN3977;ConvF(11.39, 11.39, 11.39); Calibrated: 2015/4/30;
- Sensor-Surface: 2mm (Mechanical Surface Detection)
- Electronics: DAE4 Sn541;Calibrated: 2015/2/3
- Phantom: ELI v5.0;Type: QDOVA002AA;Serial: TP:1133
- Measurement SW: DASY52, Version 52.8 (8);SEMCAD X Version 14.6.10 (7331)

System Performance Check at 450MHz/Area Scan (61x201x1):
Interpolated grid: dx=1.500 mm, dy=1.500 mm
Maximum value of SAR (interpolated) = 1.47 W/kg

System Performance Check at 450MHz/Zoom Scan (7x7x7)/Cube 0:
Measurement grid: dx=5mm, dy=5mm, dz=5mm
Reference Value = 41.79 V/m; Power Drift = -0.04 dB
Peak SAR (extrapolated) = 1.75 W/kg
SAR(1 g) = 1.16 W/kg; SAR(10 g) = 0.777 W/kg
Maximum value of SAR (measured) = 1.46 W/kg

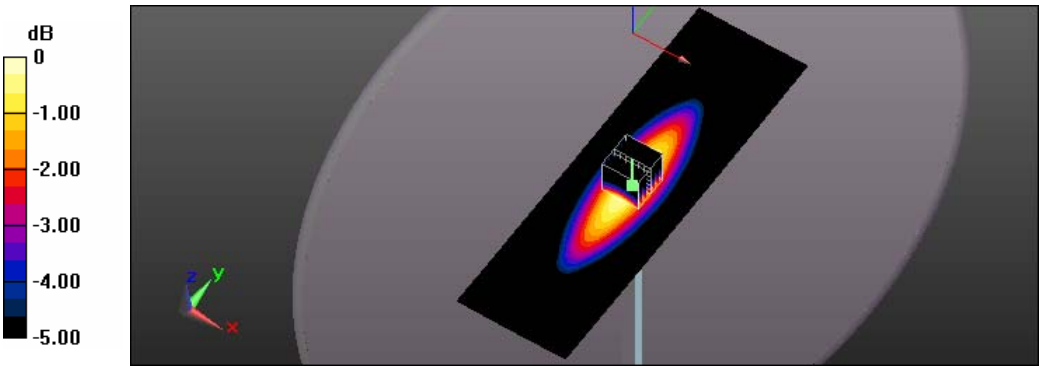

0 dB = 1.46 W/kg = 1.64 dBW/kg

Test Laboratory: A Test Lab Techno Corp.
Date: 2015/8/19Time: PM 10:28:43

System Performance Check at 450MHz_20150821_Body

DUT: Dipole 450MHz;Type: D450V2;Serial: D450V2 SN:1021

Communication System: UID 0, CW (0);Frequency: 450 MHz;Duty Cycle: 1:1
Medium parameters used: f = 450 MHz; σ = 0.938 S/m; ε_r = 58.413; ρ = 1000 kg/m^3
Phantom section: Flat Section
Measurement Standard: DASY5 (IEEE 1528-2013)
DASY Configuration:

- Area Scan setting - Find Secondary Maximum Within:2.0dB and with a peak SAR value greater than 0.5 W/Kg
- Probe: EX3DV4 - SN3977;ConvF(11.8, 11.8, 11.8); Calibrated: 2015/4/30;
- Sensor-Surface: 2mm (Mechanical Surface Detection)
- Electronics: DAE4 Sn541;Calibrated: 2015/2/3
- Phantom: ELI v5.0;Type: QDOVA002AA;Serial: TP:1133
- Measurement SW: DASY52, Version 52.8 (8);SEMCAD X Version 14.6.10 (7331)

System Performance Check at 450MHz/Area Scan (61x201x1):
Interpolated grid: dx=1.500 mm, dy=1.500 mm
Maximum value of SAR (interpolated) = 1.42 W/kg

System Performance Check at 450MHz/Zoom Scan (7x7x7)/Cube 0:
Measurement grid: dx=5mm, dy=5mm, dz=5mm
Reference Value = 39.36 V/m; Power Drift = -0.03 dB
Peak SAR (extrapolated) = 1.69 W/kg
SAR(1 g) = 1.13 W/kg; SAR(10 g) = 0.760 W/kg
Maximum value of SAR (measured) = 1.42 W/kg

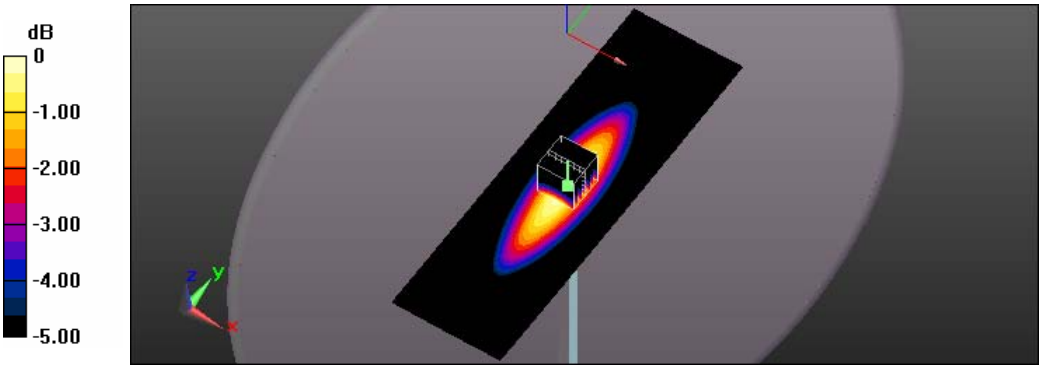

0 dB = 1.42 W/kg = 1.52 dBW/kg

Test Laboratory: A Test Lab Techno Corp.
Date: 2015/10/26Time: PM 04:25:57
System Performance Check at 450MHz_20151026_Head
DUT: Dipole 450MHz;Type: D450V2;Serial: D450V2 SN:1021
Communication System: UID 0, CW (0);Frequency: 450 MHz;Duty Cycle: 1:1
Medium parameters used: f = 450 MHz; σ = 0.87 S/m; ε_r = 43.701; ρ = 1000 kg/m^3
Phantom section: Flat Section
Measurement Standard: DASY5 (IEEE/IEC/ANSI C63.19-2011)
DASY Configuration:

- Area Scan setting - Find Secondary Maximum Within:2.0dB and with a peak SAR value greater than 0.5 W/Kg
- Probe: EX3DV4 - SN3977;ConvF(11.39, 11.39, 11.39); Calibrated: 2015/4/30;
- Sensor-Surface: 2mm (Mechanical Surface Detection)
- Electronics: DAE4 Sn541;Calibrated: 2015/2/3
- Phantom: ELI v5.0;Type: QDOVA002AA;Serial: TP:1133
- Measurement SW: DASY52, Version 52.8 (8);SEMCAD X Version 14.6.10 (7331)

System Performance Check at 450MHz/Area Scan (61x201x1): Interpolated grid: dx=1.500 mm, dy=1.500 mm
Maximum value of SAR (interpolated) = 1.46 W/kg

System Performance Check at 450MHz/Zoom Scan (7x7x7)/Cube 0: Measurement grid: dx=5mm, dy=5mm, dz=5mm
Reference Value = 41.64 V/m; Power Drift = -0.01 dB
Peak SAR (extrapolated) = 1.73 W/kg
SAR(1 g) = 1.15 W/kg; SAR(10 g) = 0.776 W/kg
Maximum value of SAR (measured) = 1.46 W/kg

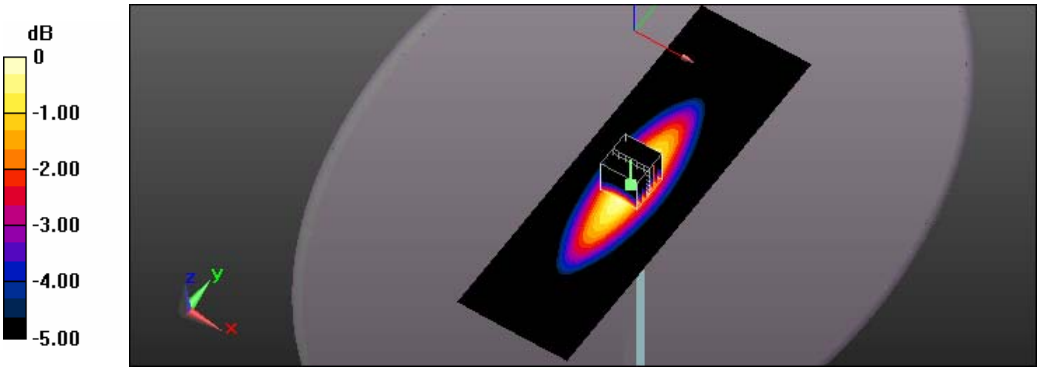

0 dB = 1.46 W/kg = 1.64 dBW/kg

Test Laboratory: A Test Lab Techno Corp.
Date: 2015/10/24Time: AM 09:17:36
System Performance Check at 450MHz_20151024_Body
DUT: Dipole 450MHz;Type: D450V2;Serial: D450V2 SN:1021
Communication System: UID 0, CW (0);Frequency: 450 MHz;Duty Cycle: 1:1
Medium parameters used: f = 450 MHz; σ = 0.938 S/m; ε_r = 58.413; ρ = 1000 kg/m^3
Phantom section: Flat Section
Measurement Standard: DASY5 (IEEE/IEC/ANSI C63.19-2011)
DASY Configuration:

- Area Scan setting - Find Secondary Maximum Within:2.0dB and with a peak SAR value greater than 0.5 W/Kg
- Probe: EX3DV4 - SN3977;ConvF(11.8, 11.8, 11.8); Calibrated: 2015/4/30;
- Sensor-Surface: 2mm (Mechanical Surface Detection)
- Electronics: DAE4 Sn541;Calibrated: 2015/2/3
- Phantom: ELI v5.0;Type: QDOVA002AA;Serial: TP:1133
- Measurement SW: DASY52, Version 52.8 (8);SEMCAD X Version 14.6.10 (7331)

System Performance Check at 450MHz/Area Scan (61x201x1): Interpolated grid: dx=1.500 mm, dy=1.500 mm
Maximum value of SAR (interpolated) = 1.43 W/kg

System Performance Check at 450MHz/Zoom Scan (7x7x7)/Cube 0: Measurement grid: dx=5mm, dy=5mm, dz=5mm
Reference Value = 39.26 V/m; Power Drift = -0.01 dB
Peak SAR (extrapolated) = 1.69 W/kg
SAR(1 g) = 1.12 W/kg; SAR(10 g) = 0.759 W/kg
Maximum value of SAR (measured) = 1.41 W/kg

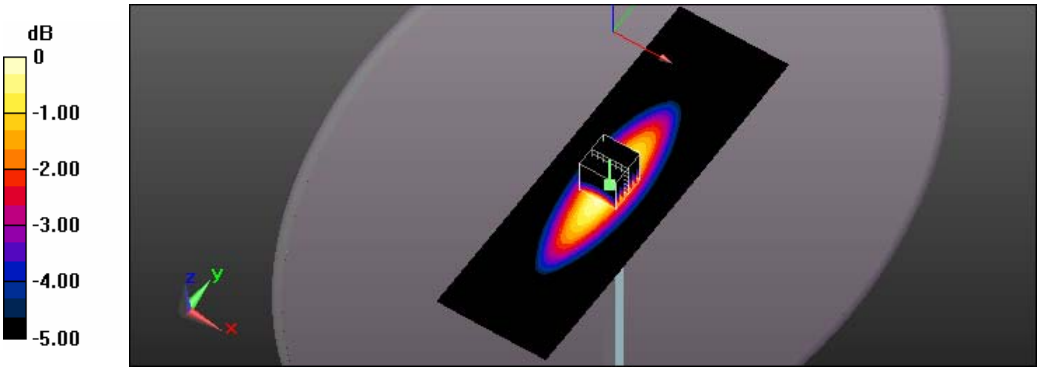

0 dB = 1.41 W/kg = 1.49 dBW/kg

Appendix B - SAR Measurement Data

Test Laboratory: A Test Lab Techno Corp.
Date: 2015/8/19Time: PM 08:25:16

2_FRS CH11_Front_25mm_Brain_Ni-MH

DUT: GMR2035-2;Type: Walkie Talkie

Communication System: UID 0, FRS (0);Frequency: 467.638 MHz;Duty Cycle: 1:1
Medium parameters used: f = 468 MHz; σ = 0.887 S/m; ε_r = 43.375; ρ = 1000 kg/m^3
Phantom section: Flat Section
Measurement Standard: DASY5 (IEEE 1528-2013)
DASY Configuration:

- Area Scan setting - Find Secondary Maximum Within:2.0dB and with a peak SAR value greater than 0.5 W/Kg
- Probe: EX3DV4 - SN3977;ConvF(11.39, 11.39, 11.39); Calibrated: 2015/4/30;
- Sensor-Surface: 2mm (Mechanical Surface Detection)
- Electronics: DAE4 Sn541;Calibrated: 2015/2/3
- Phantom: ELI v5.0;Type: QDOVA002AA;Serial: TP:1133
- Measurement SW: DASY52, Version 52.8 (8);SEMCAD X Version 14.6.10 (7331)

Flat/Area Scan (71x131x1): Interpolated grid: dx=1.500 mm, dy=1.500 mm
Maximum value of SAR (interpolated) = 0.223 W/kg

Flat/Zoom Scan (5x5x7)/Cube 0: Measurement grid: dx=8mm, dy=8mm, dz=5mm
Reference Value = 15.20 V/m; Power Drift = -0.10 dB
Peak SAR (extrapolated) = 0.221 W/kg
SAR(1 g) = 0.155 W/kg; SAR(10 g) = 0.111 W/kg
Maximum value of SAR (measured) = 0.178 W/kg

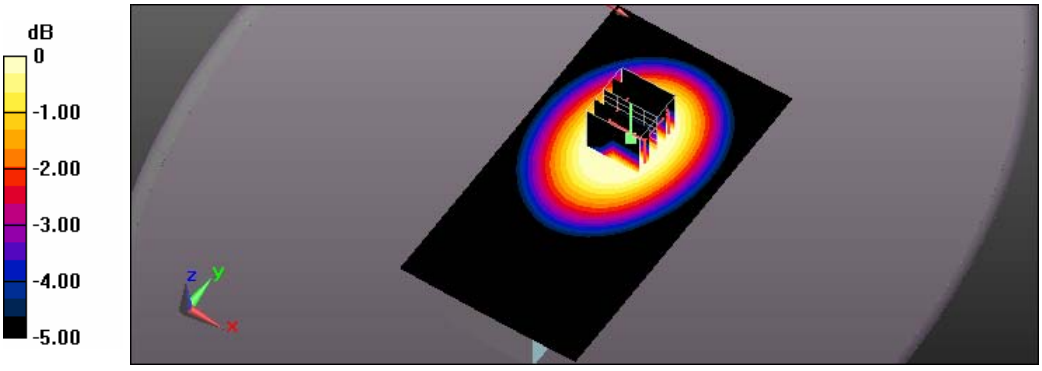

0 dB = 0.178 W/kg = -7.50 dBW/kg

Test Laboratory: A Test Lab Techno Corp.
Date: 2015/8/19Time: PM 08:02:01

4_GMRS CH4_Front_25mm_Brain_Ni-MH

DUT: GMR2035-2;Type: Walkie Talkie

Communication System: UID 0, GMRS (0);Frequency: 462.637 MHz;Duty Cycle: 1:1
Medium parameters used: f = 463 MHz; σ = 0.882 S/m; ε_r = 43.488; ρ = 1000 kg/m^3
Phantom section: Flat Section
Measurement Standard: DASY5 (IEEE 1528-2013)
DASY Configuration:

- Area Scan setting - Find Secondary Maximum Within:2.0dB and with a peak SAR value greater than 0.5 W/Kg
- Probe: EX3DV4 - SN3977;ConvF(11.39, 11.39, 11.39); Calibrated: 2015/4/30;
- Sensor-Surface: 2mm (Mechanical Surface Detection)
- Electronics: DAE4 Sn541;Calibrated: 2015/2/3
- Phantom: ELI v5.0;Type: QDOVA002AA;Serial: TP:1133
- Measurement SW: DASY52, Version 52.8 (8);SEMCAD X Version 14.6.10 (7331)

Flat/Area Scan (71x131x1): Interpolated grid: dx=1.500 mm, dy=1.500 mm
Maximum value of SAR (interpolated) = 0.451 W/kg

Flat/Zoom Scan (5x5x7)/Cube 0: Measurement grid: dx=8mm, dy=8mm, dz=5mm
Reference Value = 22.19 V/m; Power Drift = -0.16 dB
Peak SAR (extrapolated) = 0.489 W/kg
SAR(1 g) = 0.361 W/kg; SAR(10 g) = 0.262 W/kg
Maximum value of SAR (measured) = 0.431 W/kg

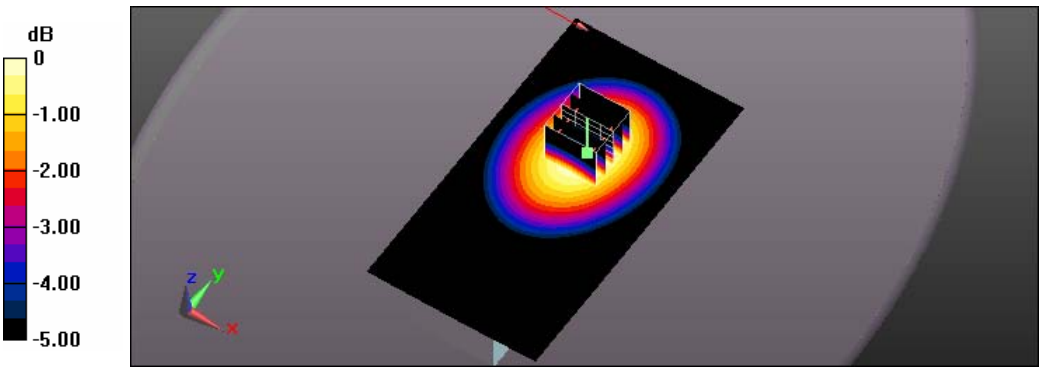

0 dB = 0.431 W/kg = -3.66 dBW/kg

Test Laboratory: A Test Lab Techno Corp.
Date: 2015/8/20Time: AM 12:07:49

6_FRS CH11_Back_10mm_Muscle_Ni-MH

DUT: GMR2035-2;Type: Walkie Talkie

Communication System: UID 0, FRS (0);Frequency: 467.638 MHz;Duty Cycle: 1:1
Medium parameters used: f = 468 MHz; σ = 0.954 S/m; ε_r = 58.299; ρ = 1000 kg/m^3
Phantom section: Flat Section
Measurement Standard: DASY5 (IEEE 1528-2013)
DASY Configuration:

- Area Scan setting - Find Secondary Maximum Within:2.0dB and with a peak SAR value greater than 0.5 W/Kg
- Probe: EX3DV4 - SN3977;ConvF(11.8, 11.8, 11.8); Calibrated: 2015/4/30;
- Sensor-Surface: 2mm (Mechanical Surface Detection)
- Electronics: DAE4 Sn541;Calibrated: 2015/2/3
- Phantom: ELI v5.0;Type: QDOVA002AA;Serial: TP:1133
- Measurement SW: DASY52, Version 52.8 (8);SEMCAD X Version 14.6.10 (7331)

Flat/Area Scan (71x131x1): Interpolated grid: dx=1.500 mm, dy=1.500 mm
Maximum value of SAR (interpolated) = 0.278 W/kg

Flat/Zoom Scan (5x5x7)/Cube 0: Measurement grid: dx=8mm, dy=8mm, dz=5mm
Reference Value = 16.79 V/m; Power Drift = -0.13 dB
Peak SAR (extrapolated) = 0.298 W/kg
SAR(1 g) = 0.217 W/kg; SAR(10 g) = 0.158 W/kg
Maximum value of SAR (measured) = 0.260 W/kg

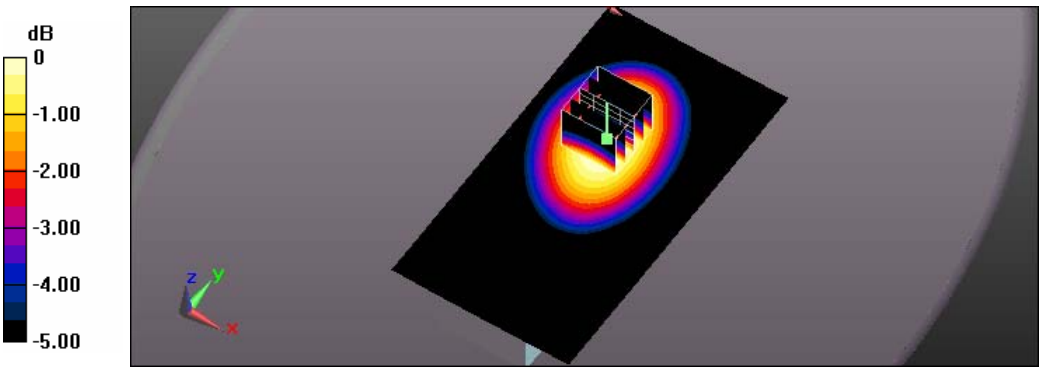

0 dB = 0.260 W/kg = -5.85 dBW/kg

Test Laboratory: A Test Lab Techno Corp.
Date: 2015/8/20Time: AM 01:03:01

10_FRS CH11_Back_0mm_Muscle_Belt clip_Ni-MH

DUT: GMR2035-2;Type: Walkie Talkie

Communication System: UID 0, FRS (0);Frequency: 467.638 MHz;Duty Cycle: 1:1
Medium parameters used: f = 468 MHz; σ = 0.954 S/m; ε_r = 58.299; ρ = 1000 kg/m^3
Phantom section: Flat Section
Measurement Standard: DASY5 (IEEE 1528-2013)
DASY Configuration:

- Area Scan setting - Find Secondary Maximum Within:2.0dB and with a peak SAR value greater than 0.5 W/Kg
- Probe: EX3DV4 - SN3977;ConvF(11.8, 11.8, 11.8); Calibrated: 2015/4/30;
- Sensor-Surface: 2mm (Mechanical Surface Detection)
- Electronics: DAE4 Sn541;Calibrated: 2015/2/3
- Phantom: ELI v5.0;Type: QDOVA002AA;Serial: TP:1133
- Measurement SW: DASY52, Version 52.8 (8);SEMCAD X Version 14.6.10 (7331)

Flat/Area Scan (71x131x1): Interpolated grid: dx=1.500 mm, dy=1.500 mm
Maximum value of SAR (interpolated) = 0.240 W/kg

Flat/Zoom Scan (5x5x7)/Cube 0: Measurement grid: dx=8mm, dy=8mm, dz=5mm
Reference Value = 15.42 V/m; Power Drift = -0.12 dB
Peak SAR (extrapolated) = 0.246 W/kg
SAR(1 g) = 0.179 W/kg; SAR(10 g) = 0.129 W/kg
Maximum value of SAR (measured) = 0.214 W/kg

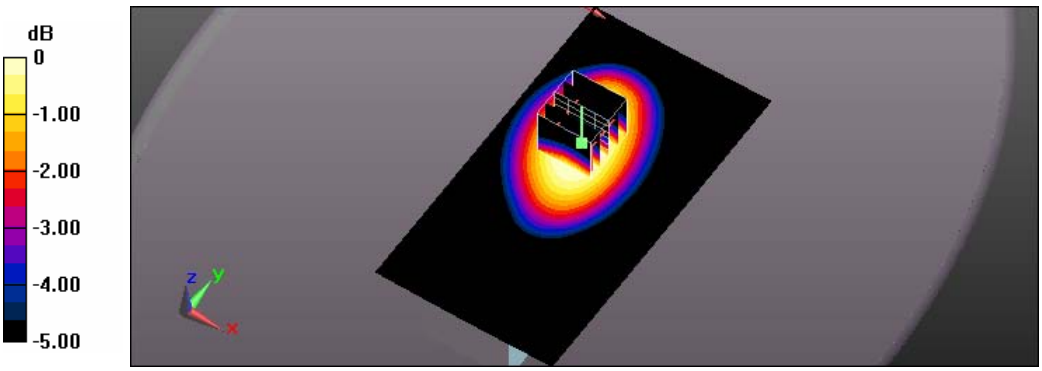

0 dB = 0.214 W/kg = -6.70 dBW/kg

Test Laboratory: A Test Lab Techno Corp.
Date: 2015/8/20Time: AM 02:50:52

8_GMRS CH4_Back_10mm_Muscle_Ni-MH

DUT: GMR2035-2;Type: Walkie Talkie

Communication System: UID 0, GMRS (0);Frequency: 462.637 MHz;Duty Cycle: 1:1
Medium parameters used: f = 463 MHz; σ = 0.949 S/m; ε_r = 58.327; ρ = 1000 kg/m^3
Phantom section: Flat Section
Measurement Standard: DASY5 (IEEE 1528-2013)
DASY Configuration:

- Area Scan setting - Find Secondary Maximum Within:2.0dB and with a peak SAR value greater than 0.5 W/Kg
- Probe: EX3DV4 - SN3977;ConvF(11.8, 11.8, 11.8); Calibrated: 2015/4/30;
- Sensor-Surface: 2mm (Mechanical Surface Detection)
- Electronics: DAE4 Sn541;Calibrated: 2015/2/3
- Phantom: ELI v5.0;Type: QDOVA002AA;Serial: TP:1133
- Measurement SW: DASY52, Version 52.8 (8);SEMCAD X Version 14.6.10 (7331)

Flat/Area Scan (71x131x1): Interpolated grid: dx=1.500 mm, dy=1.500 mm
Maximum value of SAR (interpolated) = 0.464 W/kg

Flat/Zoom Scan (5x5x7)/Cube 0: Measurement grid: dx=8mm, dy=8mm, dz=5mm
Reference Value = 20.82 V/m; Power Drift = -0.17 dB
Peak SAR (extrapolated) = 0.507 W/kg
SAR(1 g) = 0.340 W/kg; SAR(10 g) = 0.246 W/kg
Maximum value of SAR (measured) = 0.398 W/kg

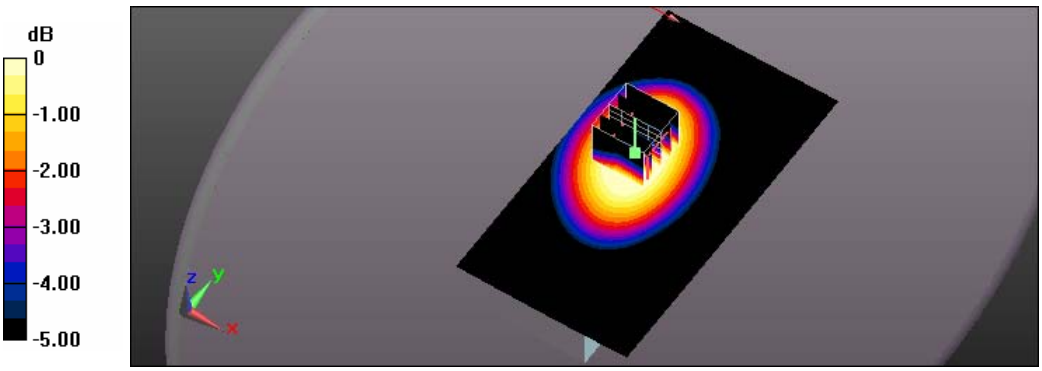

0 dB = 0.398 W/kg = -4.00 dBW/kg

Test Laboratory: A Test Lab Techno Corp.
Date: 2015/8/20Time: AM 04:12:27

12_GMRS CH4_Back_0mm_Muscle_Belt clip_Ni-MH

DUT: GMR2035-2;Type: Walkie Talkie

Communication System: UID 0, GMRS (0);Frequency: 462.637 MHz;Duty Cycle: 1:1
Medium parameters used: f = 463 MHz; σ = 0.949 S/m; ε_r = 58.327; ρ = 1000 kg/m^3
Phantom section: Flat Section
Measurement Standard: DASY5 (IEEE 1528-2013)
DASY Configuration:

- Area Scan setting - Find Secondary Maximum Within:2.0dB and with a peak SAR value greater than 0.5 W/Kg
- Probe: EX3DV4 - SN3977;ConvF(11.8, 11.8, 11.8); Calibrated: 2015/4/30;
- Sensor-Surface: 2mm (Mechanical Surface Detection)
- Electronics: DAE4 Sn541;Calibrated: 2015/2/3
- Phantom: ELI v5.0;Type: QDOVA002AA;Serial: TP:1133
- Measurement SW: DASY52, Version 52.8 (8);SEMCAD X Version 14.6.10 (7331)

Flat/Area Scan (71x131x1): Interpolated grid: dx=1.500 mm, dy=1.500 mm
Maximum value of SAR (interpolated) = 0.458 W/kg

Flat/Zoom Scan (5x5x7)/Cube 0: Measurement grid: dx=8mm, dy=8mm, dz=5mm
Reference Value = 21.22 V/m; Power Drift = -0.15 dB
Peak SAR (extrapolated) = 0.483 W/kg
SAR(1 g) = 0.348 W/kg; SAR(10 g) = 0.251 W/kg
Maximum value of SAR (measured) = 0.420 W/kg

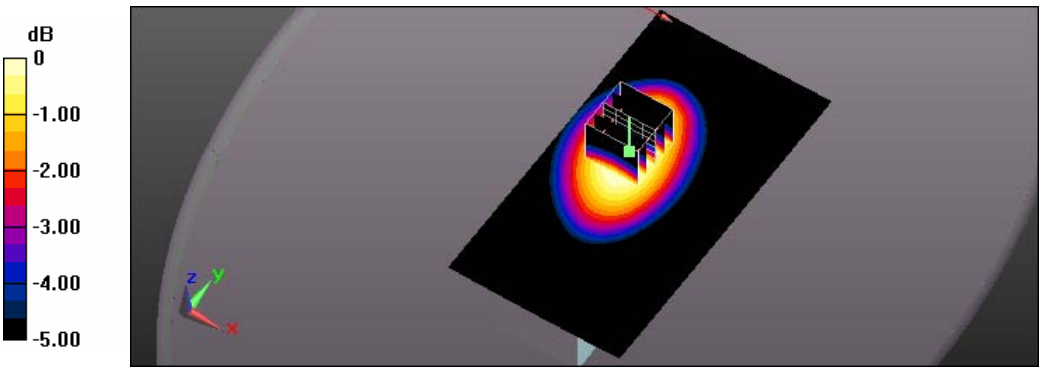

0 dB = 0.420 W/kg = -3.77 dBW/kg

©2015 A Test Lab Techno Corp.

Test Laboratory: A Test Lab Techno Corp.
Date: 2015/10/26Time: PM 07:20:55
5_FRS CH11_Front_25mm_Brain_Alkaline
DUT: GMR2035-2;Type: Walkie Talkie
Communication System: UID 0, FRS (0);Frequency: 467.638 MHz;Duty Cycle: 1:1
Medium parameters used: f = 468 MHz; σ = 0.887 S/m; ε_r = 43.375; ρ = 1000 kg/m^3
Phantom section: Flat Section
Measurement Standard: DASY5 (IEEE/IEC/ANSI C63.19-2011)
DASY Configuration:

- Area Scan setting - Find Secondary Maximum Within:2.0dB and with a peak SAR value greater than 0.5 W/Kg
- Probe: EX3DV4 - SN3977;ConvF(11.39, 11.39, 11.39); Calibrated: 2015/4/30;
- Sensor-Surface: 2mm (Mechanical Surface Detection)
- Electronics: DAE4 Sn541;Calibrated: 2015/2/3
- Phantom: ELI v5.0;Type: QDOVA002AA;Serial: TP:1133
- Measurement SW: DASY52, Version 52.8 (8);SEMCAD X Version 14.6.10 (7331)

Flat/Area Scan (71x131x1):
Interpolated grid: dx=1.500 mm, dy=1.500 mm
Maximum value of SAR (interpolated) = 0.538 W/kg

Flat/Zoom Scan (5x5x7)/Cube 0:
Measurement grid: dx=8mm, dy=8mm, dz=5mm
Reference Value = 24.51 V/m; Power Drift = -0.15 dB
Peak SAR (extrapolated) = 0.579 W/kg
SAR(1 g) = 0.426 W/kg; SAR(10 g) = 0.310 W/kg
Maximum value of SAR (measured) = 0.509 W/kg

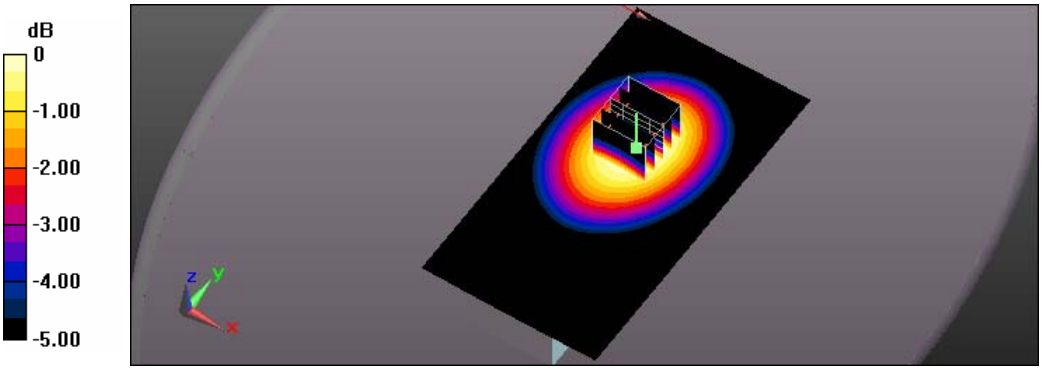

0 dB = 0.509 W/kg = -2.93 dBW/kg

Test Laboratory: A Test Lab Techno Corp.
Date: 2015/10/24Time: AM 09:51:09
1_FRS CH11_Back_10mm_Muscle_Alkaline
DUT: GMR2035-2;Type: Walkie Talkie
Communication System: UID 0, FRS (0);Frequency: 467.638 MHz;Duty Cycle: 1:1
Medium parameters used: f = 468 MHz; σ = 0.954 S/m; ε_r = 58.299; ρ = 1000 kg/m^3
Phantom section: Flat Section
Measurement Standard: DASY5 (IEEE/IEC/ANSI C63.19-2011)
DASY Configuration:

- Area Scan setting - Find Secondary Maximum Within:2.0dB and with a peak SAR value greater than 0.5 W/Kg
- Probe: EX3DV4 - SN3977;ConvF(11.8, 11.8, 11.8); Calibrated: 2015/4/30;
- Sensor-Surface: 2mm (Mechanical Surface Detection)
- Electronics: DAE4 Sn541;Calibrated: 2015/2/3
- Phantom: ELI v5.0;Type: QDOVA002AA;Serial: TP:1133
- Measurement SW: DASY52, Version 52.8 (8);SEMCAD X Version 14.6.10 (7331)

Flat/Area Scan (61x121x1):
Interpolated grid: dx=1.500 mm, dy=1.500 mm
Maximum value of SAR (interpolated) = 0.451 W/kg

Flat/Zoom Scan (5x5x7)/Cube 0:
Measurement grid: dx=8mm, dy=8mm, dz=5mm
Reference Value = 21.47 V/m; Power Drift = -0.16 dB
Peak SAR (extrapolated) = 0.480 W/kg
SAR(1 g) = 0.351 W/kg; SAR(10 g) = 0.256 W/kg
Maximum value of SAR (measured) = 0.420 W/kg

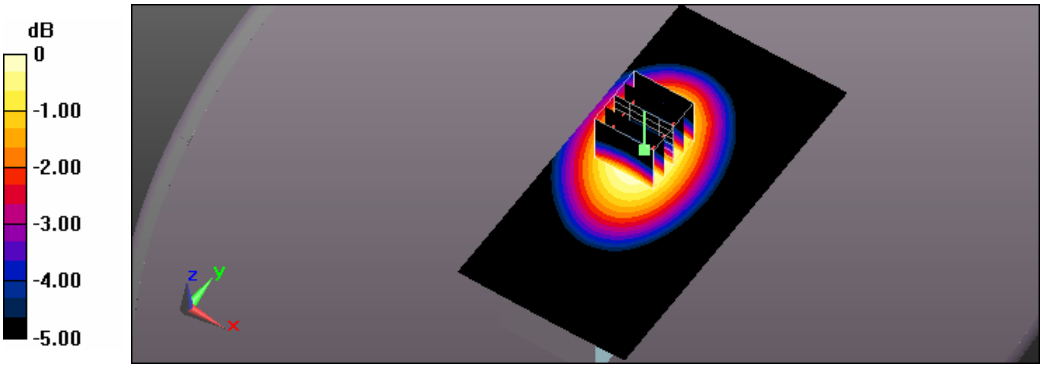

0 dB = 0.420 W/kg = -3.77 dBW/kg

Test Laboratory: A Test Lab Techno Corp.
Date: 2015/10/24Time: AM 10:24:19
2_FRS CH11_Back_0mm_Muscle_Belt clip_Alkaline
DUT: GMR2035-2;Type: Walkie Talkie
Communication System: UID 0, FRS (0);Frequency: 467.638 MHz;Duty Cycle: 1:1
Medium parameters used: f = 468 MHz; σ = 0.954 S/m; ε_r = 58.299; ρ = 1000 kg/m^3
Phantom section: Flat Section
Measurement Standard: DASY5 (IEEE/IEC/ANSI C63.19-2011)
DASY Configuration:

- Area Scan setting - Find Secondary Maximum Within:2.0dB and with a peak SAR value greater than 0.5 W/Kg
- Probe: EX3DV4 - SN3977;ConvF(11.8, 11.8, 11.8); Calibrated: 2015/4/30;
- Sensor-Surface: 2mm (Mechanical Surface Detection)
- Electronics: DAE4 Sn541;Calibrated: 2015/2/3
- Phantom: ELI v5.0;Type: QDOVA002AA;Serial: TP:1133
- Measurement SW: DASY52, Version 52.8 (8);SEMCAD X Version 14.6.10 (7331)

Flat/Area Scan (61x121x1):
Interpolated grid: dx=1.500 mm, dy=1.500 mm
Maximum value of SAR (interpolated) = 0.412 W/kg

Flat/Zoom Scan (5x5x7)/Cube 0:
Measurement grid: dx=8mm, dy=8mm, dz=5mm
Reference Value = 22.16 V/m; Power Drift = -0.03 dB
Peak SAR (extrapolated) = 0.447 W/kg
SAR(1 g) = 0.322 W/kg; SAR(10 g) = 0.233 W/kg
Maximum value of SAR (measured) = 0.388 W/kg

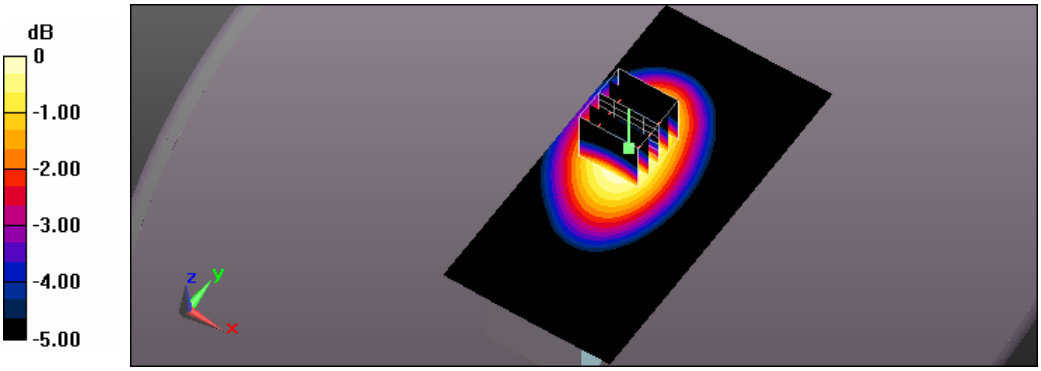

0 dB = 0.388 W/kg = -4.11 dBW/kg

Test Laboratory: A Test Lab Techno Corp.
Date: 2015/10/26Time: PM 07:46:38
6_GMRS CH4_Front_25mm_Brain_Alkaline
DUT: GMR2035-2;Type: Walkie Talkie
Communication System: UID 0, GMRS (0);Frequency: 462.637 MHz;Duty Cycle: 1:1
Medium parameters used: f = 463 MHz; σ = 0.882 S/m; ε_r = 43.488; ρ = 1000 kg/m^3
Phantom section: Flat Section
Measurement Standard: DASY5 (IEEE/IEC/ANSI C63.19-2011)
DASY Configuration:

- Area Scan setting - Find Secondary Maximum Within:2.0dB and with a peak SAR value greater than 0.5 W/Kg
- Probe: EX3DV4 - SN3977;ConvF(11.39, 11.39, 11.39); Calibrated: 2015/4/30;
- Sensor-Surface: 2mm (Mechanical Surface Detection)
- Electronics: DAE4 Sn541;Calibrated: 2015/2/3
- Phantom: ELI v5.0;Type: QDOVA002AA;Serial: TP:1133
- Measurement SW: DASY52, Version 52.8 (8);SEMCAD X Version 14.6.10 (7331)

Flat/Area Scan (71x131x1):
Interpolated grid: dx=1.500 mm, dy=1.500 mm
Maximum value of SAR (interpolated) = 0.840 W/kg

Flat/Zoom Scan (5x5x7)/Cube 0:
Measurement grid: dx=8mm, dy=8mm, dz=5mm
Reference Value = 30.40 V/m; Power Drift = -0.18 dB
Peak SAR (extrapolated) = 0.887 W/kg
SAR(1 g) = 0.653 W/kg; SAR(10 g) = 0.475 W/kg
Maximum value of SAR (measured) = 0.780 W/kg

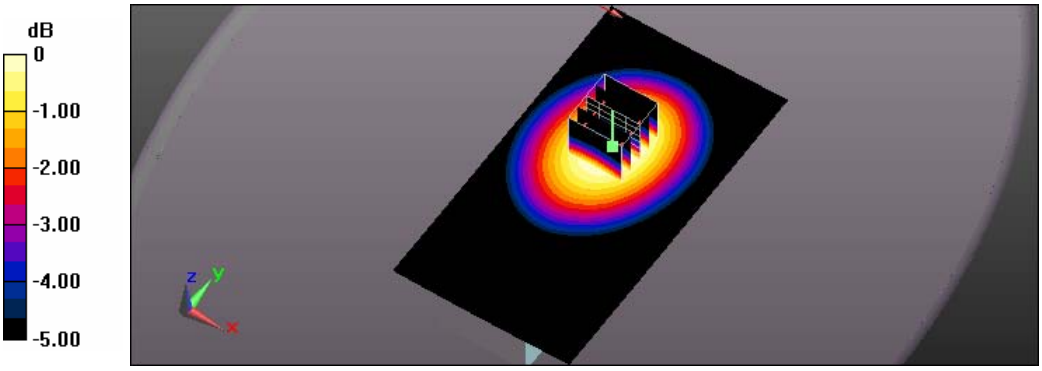

0 dB = 0.780 W/kg = -1.08 dBW/kg

Test Laboratory: A Test Lab Techno Corp.
Date: 2015/10/24Time: AM 10:45:21
3_GMRS CH4_Back_10mm_Muscle_Alkaline
DUT: GMR2035-2;Type: Walkie Talkie
Communication System: UID 0, GMRS (0);Frequency: 462.637 MHz;Duty Cycle: 1:1
Medium parameters used: f = 463 MHz; σ = 0.949 S/m; ε_r = 58.327; ρ = 1000 kg/m^3
Phantom section: Flat Section
Measurement Standard: DASY5 (IEEE/IEC/ANSI C63.19-2011)
DASY Configuration:

- Area Scan setting - Find Secondary Maximum Within:2.0dB and with a peak SAR value greater than 0.5 W/Kg
- Probe: EX3DV4 - SN3977;ConvF(11.8, 11.8, 11.8); Calibrated: 2015/4/30;
- Sensor-Surface: 2mm (Mechanical Surface Detection)
- Electronics: DAE4 Sn541;Calibrated: 2015/2/3
- Phantom: ELI v5.0;Type: QDOVA002AA;Serial: TP:1133
- Measurement SW: DASY52, Version 52.8 (8);SEMCAD X Version 14.6.10 (7331)

Flat/Area Scan (71x131x1):
Interpolated grid: dx=1.500 mm, dy=1.500 mm
Maximum value of SAR (interpolated) = 0.735 W/kg

Flat/Zoom Scan (5x5x7)/Cube 0:
Measurement grid: dx=8mm, dy=8mm, dz=5mm
Reference Value = 25.58 V/m; Power Drift = -0.10 dB
Peak SAR (extrapolated) = 0.786 W/kg
SAR(1 g) = 0.572 W/kg; SAR(10 g) = 0.417 W/kg
Maximum value of SAR (measured) = 0.686 W/kg

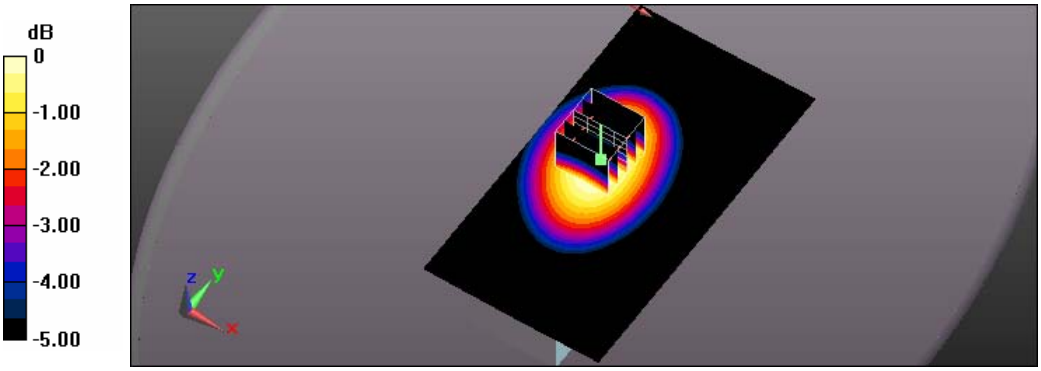

0 dB = 0.686 W/kg = -1.64 dBW/kg

Test Laboratory: A Test Lab Techno Corp.
Date: 2015/10/24Time: AM 11:08:40
4_GMRS CH4_Back_0mm_Muscle_Belt clip_Alkaline
DUT: GMR2035-2;Type: Walkie Talkie
Communication System: UID 0, GMRS (0);Frequency: 462.637 MHz;Duty Cycle: 1:1
Medium parameters used: f = 463 MHz; σ = 0.949 S/m; ε_r = 58.327; ρ = 1000 kg/m^3
Phantom section: Flat Section
Measurement Standard: DASY5 (IEEE/IEC/ANSI C63.19-2011)
DASY Configuration:

- Area Scan setting - Find Secondary Maximum Within:2.0dB and with a peak SAR value greater than 0.5 W/Kg
- Probe: EX3DV4 - SN3977;ConvF(11.8, 11.8, 11.8); Calibrated: 2015/4/30;
- Sensor-Surface: 2mm (Mechanical Surface Detection)
- Electronics: DAE4 Sn541;Calibrated: 2015/2/3
- Phantom: ELI v5.0;Type: QDOVA002AA;Serial: TP:1133
- Measurement SW: DASY52, Version 52.8 (8);SEMCAD X Version 14.6.10 (7331)

Flat/Area Scan (71x131x1):
Interpolated grid: dx=1.500 mm, dy=1.500 mm
Maximum value of SAR (interpolated) = 0.723 W/kg

Flat/Zoom Scan (5x5x7)/Cube 0:
Measurement grid: dx=8mm, dy=8mm, dz=5mm
Reference Value = 25.41 V/m; Power Drift = -0.09 dB
Peak SAR (extrapolated) = 0.778 W/kg
SAR(1 g) = 0.561 W/kg; SAR(10 g) = 0.406 W/kg
Maximum value of SAR (measured) = 0.676 W/kg

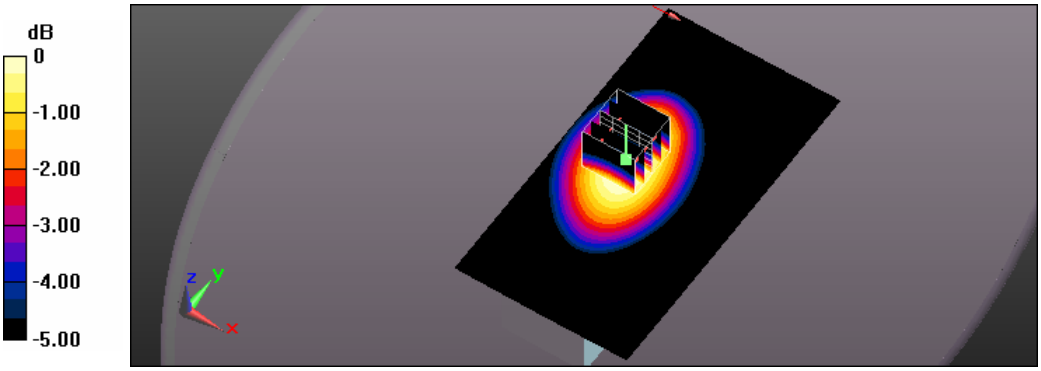

0 dB = 0.676 W/kg = -1.70 dBW/kg

Appendix C - Calibration

All of the instruments Calibration information are listed below.

- Dipole _ D450V2 SN:1021 Calibration No.D450V2-1021_Apr15
- Probe _ EX3DV4 SN:3977 Calibration No.EX3-3977_ Apr15
- DAE _ DAE4 SN:541 Calibration No.DAE4-541_Feb15

©2015 A Test Lab Techno Corp.

Calibration Laboratory of
Schmid & Partner
Engineering AG
Zeughausstrasse 43, 8004 Zurich, Switzerland

S Schweizerischer Kalibrierdienst
C Service suisse d'étalonnage
Servizio svizzero di taratura
S Swiss Calibration Service

Accredited by the Swiss Accreditation Service (SAS)
The Swiss Accreditation Service is one of the signatories to the EA Multilateral Agreement for the recognition of calibration certificates

Accreditation No.: SCS 0108

Client **ATL (Auden)**

Certificate No: D450V2-1021_Apr15

CALIBRATION CERTIFICATE

Object	D450V2 - SN:1021
Calibration procedure(s)	QA CAL-15.v8 Calibration procedure for dipole validation kits below 700 MHz
Calibration date:	April 24, 2015

This calibration certificate documents the traceability to national standards, which realize the physical units of measurements (SI).
The measurements and the uncertainties with confidence probability are given on the following pages and are part of the certificate.

All calibrations have been conducted in the closed laboratory facility: environment temperature (22 ± 3)°C and humidity < 70%.

Calibration Equipment used (M&TE critical for calibration)

Primary Standards	ID #	Cal Date (Certificate No.)	Scheduled Calibration
Power meter E4419B	GB41293874	01-Apr-15 (No. 217-02128)	Mar-16
Power sensor E4412A	MY41498087	01-Apr-15 (No. 217-02128)	Mar-16
Reference 3 dB Attenuator	SN: S5054 (3c)	01-Apr-15 (No. 217-02129)	Mar-16
Reference 20 dB Attenuator	SN: S5058 (20k)	01-Apr-15 (No. 217-02131)	Mar-16
Type-N mismatch combination	SN: 5047.2 / 06327	01-Apr-15 (No. 217-02134)	Mar-16
Reference Probe ET3DV6	SN: 1507	30-Dec-14 (No. ET3-1507_Dec14)	Dec-15
DAE4	SN: 654	30-Jun-14 (No. DAE4-654_Jun14)	Jun-15

Secondary Standards	ID #	Check Date (in house)	Scheduled Check
RF generator HP 8648C	US3642U01700	04-Aug-99 (in house check Apr-13)	In house check: Apr-16
Network Analyzer HP 8753E	US37390585 S4206	18-Oct-01 (in house check Oct-14)	In house check: Oct-15

	Name	Function	Signature
Calibrated by:	Jeton Kastrati	Laboratory Technician	
Approved by:	Katja Pokovic	Technical Manager	

Issued: April 24, 2015

This calibration certificate shall not be reproduced except in full without written approval of the laboratory.

Certificate No: D450V2-1021_Apr15 Page 1 of 8

Glossary:

TSL	tissue simulating liquid
ConvF	sensitivity in TSL / NORM x,y,z
N/A	not applicable or not measured

Calibration is Performed According to the Following Standards:

a) IEEE Std 1528-2013, "IEEE Recommended Practice for Determining the Peak Spatial-Averaged Specific Absorption Rate (SAR) in the Human Head from Wireless Communications Devices: Measurement Techniques", June 2013
b) IEC 62209-1, "Procedure to measure the Specific Absorption Rate (SAR) for hand-held devices used in close proximity to the ear (frequency range of 300 MHz to 3 GHz)", February 2005
c) KDB 865664, "SAR Measurement Requirements for 100 MHz to 6 GHz"

Additional Documentation:

d) DASY4/5 System Handbook

Methods Applied and Interpretation of Parameters:

- *Measurement Conditions:* Further details are available from the Validation Report at the end of the certificate. All figures stated in the certificate are valid at the frequency indicated.
- *Antenna Parameters with TSL:* The dipole is mounted with the spacer to position its feed point exactly below the center marking of the flat phantom section, with the arms oriented parallel to the body axis.
- *Feed Point Impedance and Return Loss:* These parameters are measured with the dipole positioned under the liquid filled phantom. The impedance stated is transformed from the measurement at the SMA connector to the feed point. The Return Loss ensures low reflected power. No uncertainty required.
- *Electrical Delay:* One-way delay between the SMA connector and the antenna feed point. No uncertainty required.
- *SAR measured:* SAR measured at the stated antenna input power.
- *SAR normalized:* SAR as measured, normalized to an input power of 1 W at the antenna connector.
- *SAR for nominal TSL parameters:* The measured TSL parameters are used to calculate the nominal SAR result.

The reported uncertainty of measurement is stated as the standard uncertainty of measurement multiplied by the coverage factor k=2, which for a normal distribution corresponds to a coverage probability of approximately 95%.

©2015 A Test Lab Techno Corp.

Measurement Conditions

DASY system configuration, as far as not given on page 1.

DASY Version	DASY5	V52.8.8
Extrapolation	Advanced Extrapolation	
Phantom	Flat Phantom V4.4	Shell thickness: 6 ± 0.2 mm
Distance Dipole Center - TSL	15 mm	with Spacer
Zoom Scan Resolution	dx, dy, dz = 5 mm	
Frequency	450 MHz ± 1 MHz	

Head TSL parameters

The following parameters and calculations were applied.

	Temperature	**Permittivity**	**Conductivity**
Nominal Head TSL parameters	22.0 °C	43.5	0.87 mho/m
Measured Head TSL parameters	(22.0 ± 0.2) °C	43.9 ± 6 %	0.91 mho/m ± 6 %
Head TSL temperature change during test	< 0.5 °C	----	----

SAR result with Head TSL

SAR averaged over 1 cm^3 (1 g) of Head TSL	Condition	
SAR measured	250 W input power	1.24 W/kg
SAR for nominal Head TSL parameters	normalized to 1W	**4.80 W/kg ± 18.1 % (k=2)**

SAR averaged over 10 cm^3 (10 g) of Head TSL	condition	
SAR measured	250 W input power	0.821 W/kg
SAR for nominal Head TSL parameters	normalized to 1W	**3.19 W/kg ± 17.6 % (k=2)**

Body TSL parameters

The following parameters and calculations were applied.

	Temperature	**Permittivity**	**Conductivity**
Nominal Body TSL parameters	22.0 °C	56.7	0.94 mho/m
Measured Body TSL parameters	(22.0 ± 0.2) °C	55.1 ± 6 %	0.95 mho/m ± 6 %
Body TSL temperature change during test	< 0.5 °C	----	----

SAR result with Body TSL

SAR averaged over 1 cm^3 (1 g) of Body TSL	Condition	
SAR measured	250 W input power	1.19 W/kg
SAR for nominal Body TSL parameters	normalized to 1W	**4.69 W/kg ± 18.1 % (k=2)**

SAR averaged over 10 cm^3 (10 g) of Body TSL	condition	
SAR measured	250 W input power	0.779 W/kg
SAR for nominal Body TSL parameters	normalized to 1W	**3.08 W/kg ± 17.6 % (k=2)**

©2015 A Test Lab Techno Corp.

Appendix (Additional assessments outside the scope of SCS 0108)

Antenna Parameters with Head TSL

Impedance, transformed to feed point	54.6 Ω - 6.5 jΩ
Return Loss	- 22.4 dB

Antenna Parameters with Body TSL

Impedance, transformed to feed point	52.2 Ω - 8.9 jΩ
Return Loss	- 21.0 dB

General Antenna Parameters and Design

Electrical Delay (one direction)	1.350 ns

After long term use with 100W radiated power, only a slight warming of the dipole near the feedpoint can be measured.

The dipole is made of standard semirigid coaxial cable. The center conductor of the feeding line is directly connected to the second arm of the dipole. The antenna is therefore short-circuited for DC-signals. On some of the dipoles, small end caps are added to the dipole arms in order to improve matching when loaded according to the position as explained in the "Measurement Conditions" paragraph. The SAR data are not affected by this change. The overall dipole length is still according to the Standard.
No excessive force must be applied to the dipole arms, because they might bend or the soldered connections near the feedpoint may be damaged.

Additional EUT Data

Manufactured by	SPEAG
Manufactured on	February 04, 2004

©2015 A Test Lab Techno Corp.

DASY5 Validation Report for Head TSL

Date: 24.04.2015

Test Laboratory: SPEAG, Zurich, Switzerland

DUT: Dipole 450 MHz; Type: D450V2; Serial: D450V2 - SN:1021

Communication System: UID 0 - CW; Frequency: 450 MHz
Medium parameters used: f = 450 MHz; σ = 0.91 S/m; ε_r = 43.9; ρ = 1000 kg/m^3
Phantom section: Flat Section
Measurement Standard: DASY5 (IEEE/IEC/ANSI C63.19-2011)

DASY52 Configuration:

- Probe: ET3DV6 - SN1507; ConvF(6.58, 6.58, 6.58); Calibrated: 30.12.2014;
- Sensor-Surface: 4mm (Mechanical Surface Detection)
- Electronics: DAE4 Sn654; Calibrated: 30.06.2014
- Phantom: Flat Phantom 4.4 ; Type: Flat Phantom 4.4; Serial: 1002
- DASY52 52.8.8(1222); SEMCAD X 14.6.10(7331)

Dipole Calibration for Head Tissue/d=15mm, Pin=250mW/Zoom Scan (7x7x7)/Cube 0:

Measurement grid: dx=5mm, dy=5mm, dz=5mm
Reference Value = 39.78 V/m; Power Drift = 0.00 dB
Peak SAR (extrapolated) = 1.78 W/kg
SAR(1 g) = 1.24 W/kg; SAR(10 g) = 0.821 W/kg
Maximum value of SAR (measured) = 1.33 W/kg

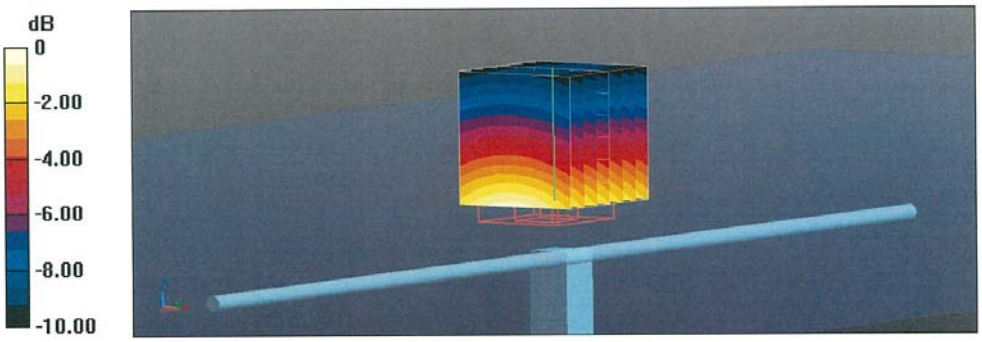

0 dB = 1.33 W/kg = 1.24 dBW/kg

©2015 A Test Lab Techno Corp.

Impedance Measurement Plot for Head TSL

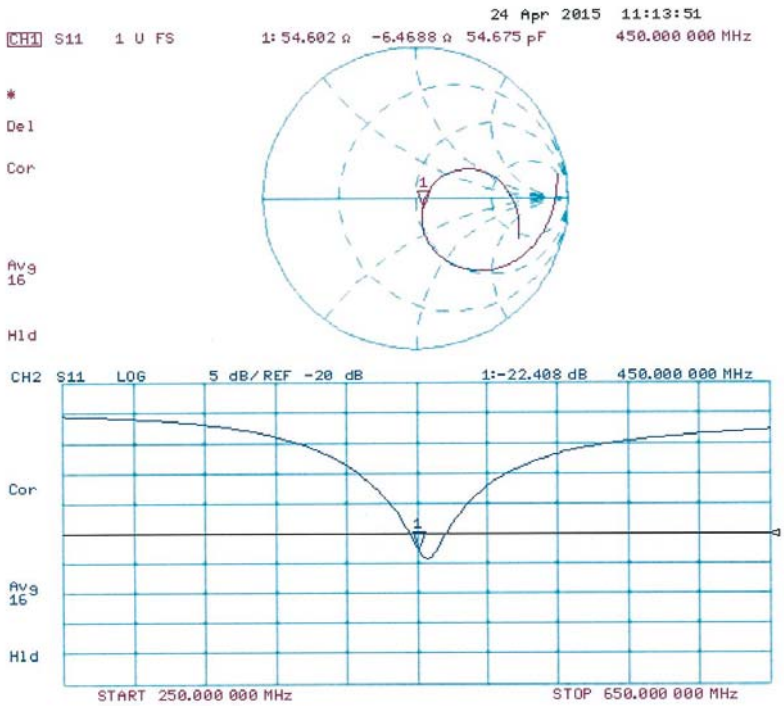

©2015 A Test Lab Techno Corp.

DASY5 Validation Report for Body TSL

Date: 24.04.2015

Test Laboratory: SPEAG, Zurich, Switzerland

DUT: Dipole 450 MHz; Type: D450V2; Serial: D450V2 - SN:1021

Communication System: UID 0 - CW; Frequency: 450 MHz
Medium parameters used: f = 450 MHz; σ = 0.95 S/m; ε_r = 55.1; ρ = 1000 kg/m^3
Phantom section: Flat Section
Measurement Standard: DASY5 (IEEE/IEC/ANSI C63.19-2011)

DASY52 Configuration:

- Probe: ET3DV6 - SN1507; ConvF(7.05, 7.05, 7.05); Calibrated: 30.12.2014;
- Sensor-Surface: 4mm (Mechanical Surface Detection)
- Electronics: DAE4 Sn654; Calibrated: 30.06.2014
- Phantom: Flat Phantom 4.4 ; Type: Flat Phantom 4.4; Serial: 1002
- DASY52 52.8.8(1222); SEMCAD X 14.6.10(7331)

Dipole Calibration for Body Tissue/d=15mm, Pin=250mW/Zoom Scan (7x7x7)/Cube 0:

Measurement grid: dx=5mm, dy=5mm, dz=5mm
Reference Value = 36.66 V/m; Power Drift = 0.03 dB
Peak SAR (extrapolated) = 1.92 W/kg
SAR(1 g) = 1.19 W/kg; SAR(10 g) = 0.779 W/kg
Maximum value of SAR (measured) = 1.27 W/kg

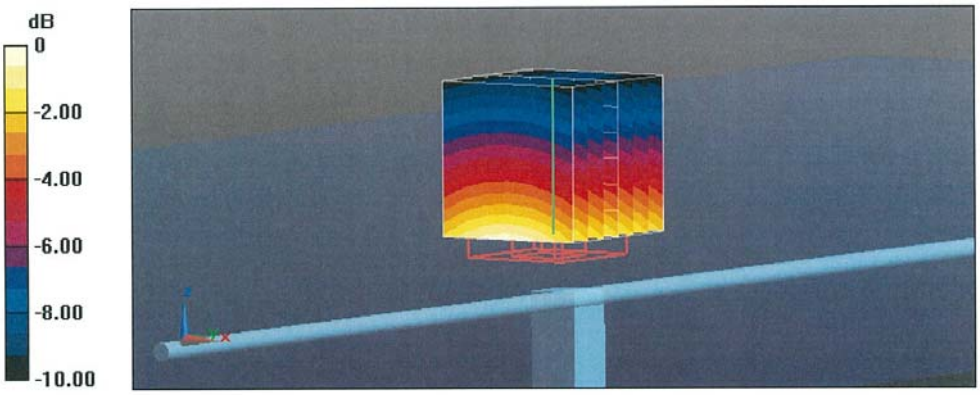

0 dB = 1.27 W/kg = 1.04 dBW/kg

©2015 A Test Lab Techno Corp.

Impedance Measurement Plot for Body TSL

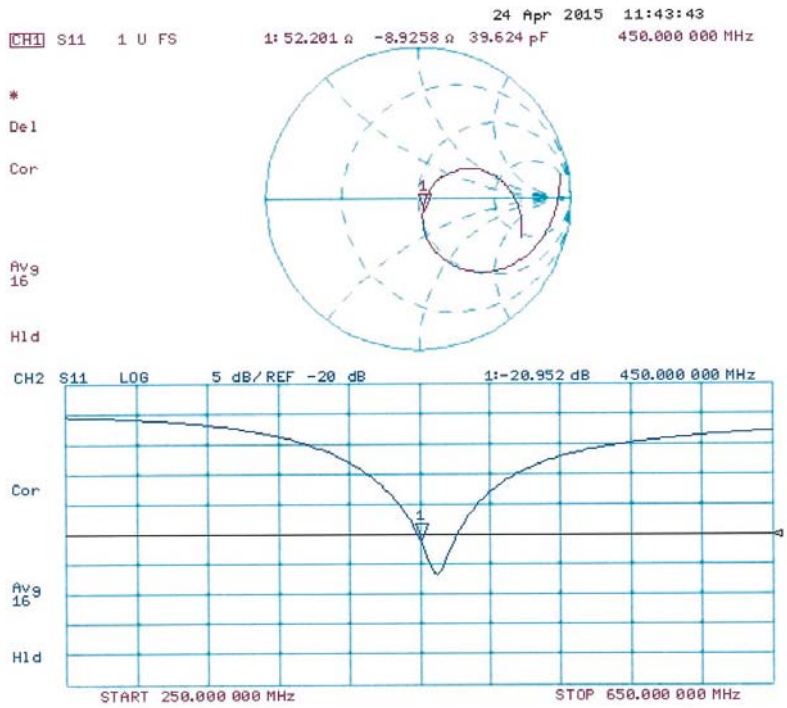

©2015 A Test Lab Techno Corp.

Calibration Laboratory of
Schmid & Partner
Engineering AG
Zeughausstrasse 43, 8004 Zurich, Switzerland

S Schweizerischer Kalibrierdienst
C Service suisse d'étalonnage
S Servizio svizzero di taratura
Swiss Calibration Service

Accredited by the Swiss Accreditation Service (SAS)
The Swiss Accreditation Service is one of the signatories to the EA Multilateral Agreement for the recognition of calibration certificates

Accreditation No.: SCS 0108

Client ATL (Auden)

Certificate No: EX3-3977_Apr15

CALIBRATION CERTIFICATE

Object	EX3DV4 - SN:3977
Calibration procedure(s)	QA CAL-01.v9, QA CAL-12.v9, QA CAL-23.v5, QA CAL-25.v6 Calibration procedure for dosimetric E-field probes
Calibration date:	April 30, 2015

This calibration certificate documents the traceability to national standards, which realize the physical units of measurements (SI).
The measurements and the uncertainties with confidence probability are given on the following pages and are part of the certificate.

All calibrations have been conducted in the closed laboratory facility: environment temperature (22 ± 3)°C and humidity < 70%.

Calibration Equipment used (M&TE critical for calibration)

Primary Standards	ID	Cal Date (Certificate No.)	Scheduled Calibration
Power meter E4419B	GB41293874	01-Apr-15 (No. 217-02128)	Mar-16
Power sensor E4412A	MY41498087	01-Apr-15 (No. 217-02128)	Mar-16
Reference 3 dB Attenuator	SN: S5054 (3c)	01-Apr-15 (No. 217-02129)	Mar-16
Reference 20 dB Attenuator	SN: S5277 (20x)	01-Apr-15 (No. 217-02132)	Mar-16
Reference 30 dB Attenuator	SN: S5129 (30b)	01-Apr-15 (No. 217-02133)	Mar-16
Reference Probe ES3DV2	SN: 3013	30-Dec-14 (No. ES3-3013_Dec14)	Dec-15
DAE4	SN: 660	14-Jan-15 (No. DAE4-660_Jan15)	Jan-16
Secondary Standards	ID	Check Date (in house)	Scheduled Check
RF generator HP 8648C	US3642U01700	4-Aug-99 (in house check Apr-13)	In house check: Apr-16
Network Analyzer HP 8753E	US37390585	18-Oct-01 (in house check Oct-14)	In house check: Oct-15

	Name	Function	Signature
Calibrated by:	Jeton Kastrati	Laboratory Technician	
Approved by:	Katja Pokovic	Technical Manager	

Issued: April 30, 2015

This calibration certificate shall not be reproduced except in full without written approval of the laboratory.

©2015 A Test Lab Techno Corp.

Glossary:

TSL	tissue simulating liquid
NORMx,y,z	sensitivity in free space
ConvF	sensitivity in TSL / NORMx,y,z
DCP	diode compression point
CF	crest factor (1/duty_cycle) of the RF signal
A, B, C, D	modulation dependent linearization parameters
Polarization φ	φ rotation around probe axis
Polarization ϑ	ϑ rotation around an axis that is in the plane normal to probe axis (at measurement center), i.e., ϑ = 0 is normal to probe axis
Connector Angle	information used in DASY system to align probe sensor X to the robot coordinate system

Calibration is Performed According to the Following Standards:

a) IEEE Std 1528-2013, "IEEE Recommended Practice for Determining the Peak Spatial-Averaged Specific Absorption Rate (SAR) in the Human Head from Wireless Communications Devices: Measurement Techniques", June 2013

b) IEC 62209-1, "Procedure to measure the Specific Absorption Rate (SAR) for hand-held devices used in close proximity to the ear (frequency range of 300 MHz to 3 GHz)", February 2005

Methods Applied and Interpretation of Parameters:

- *NORMx,y,z:* Assessed for E-field polarization ϑ = 0 (f ≤ 900 MHz in TEM-cell; f > 1800 MHz: R22 waveguide). NORMx,y,z are only intermediate values, i.e., the uncertainties of NORMx,y,z does not affect the E^2-field uncertainty inside TSL (see below *ConvF*).
- *NORM(f)x,y,z = NORMx,y,z * frequency_response* (see Frequency Response Chart). This linearization is implemented in DASY4 software versions later than 4.2. The uncertainty of the frequency response is included in the stated uncertainty of *ConvF*.
- *DCPx,y,z:* DCP are numerical linearization parameters assessed based on the data of power sweep with CW signal (no uncertainty required). DCP does not depend on frequency nor media.
- *PAR:* PAR is the Peak to Average Ratio that is not calibrated but determined based on the signal characteristics
- *Ax,y,z; Bx,y,z; Cx,y,z; Dx,y,z; VRx,y,z: A, B, C, D* are numerical linearization parameters assessed based on the data of power sweep for specific modulation signal. The parameters do not depend on frequency nor media. *VR* is the maximum calibration range expressed in RMS voltage across the diode.
- *ConvF and Boundary Effect Parameters:* Assessed in flat phantom using E-field (or Temperature Transfer Standard for f ≤ 800 MHz) and inside waveguide using analytical field distributions based on power measurements for f > 800 MHz. The same setups are used for assessment of the parameters applied for boundary compensation (alpha, depth) of which typical uncertainty values are given. These parameters are used in DASY4 software to improve probe accuracy close to the boundary. The sensitivity in TSL corresponds to *NORMx,y,z * ConvF* whereby the uncertainty corresponds to that given for *ConvF*. A frequency dependent *ConvF* is used in DASY version 4.4 and higher which allows extending the validity from ± 50 MHz to ± 100 MHz.
- *Spherical isotropy (3D deviation from isotropy)*: in a field of low gradients realized using a flat phantom exposed by a patch antenna.
- *Sensor Offset*: The sensor offset corresponds to the offset of virtual measurement center from the probe tip (on probe axis). No tolerance required.
- *Connector Angle*: The angle is assessed using the information gained by determining the *NORMx* (no uncertainty required).

©2015 A Test Lab Techno Corp.

Probe EX3DV4

SN:3977

Manufactured: November 5, 2013
Calibrated: April 30, 2015

Calibrated for DASY/EASY Systems
(Note: non-compatible with DASY2 system!)

©2015 A Test Lab Techno Corp.

DASY/EASY - Parameters of Probe: EX3DV4 - SN:3977

Basic Calibration Parameters

	Sensor X	Sensor Y	Sensor Z	Unc (k=2)
Norm ($\mu V/(V/m)^2$)[A]	0.54	0.57	0.54	± 10.1 %
DCP (mV)[B]	101.3	101.4	101.4	

Modulation Calibration Parameters

UID	Communication System Name		A dB	B dB√μV	C	D dB	VR mV	Unc[E] (k=2)
0	CW	X	0.0	0.0	1.0	0.00	173.3	±3.3 %
		Y	0.0	0.0	1.0		176.3	
		Z	0.0	0.0	1.0		168.3	

The reported uncertainty of measurement is stated as the standard uncertainty of measurement multiplied by the coverage factor k=2, which for a normal distribution corresponds to a coverage probability of approximately 95%.

[A] The uncertainties of NormX,Y,Z do not affect the E^2-field uncertainty inside TSL (see Pages 5 and 6).
[B] Numerical linearization parameter: uncertainty not required.
[E] Uncertainty is determined using the max. deviation from linear response applying rectangular distribution and is expressed for the square of the field value.

©2015 A Test Lab Techno Corp.

DASY/EASY - Parameters of Probe: EX3DV4 - SN:3977

Calibration Parameter Determined in Head Tissue Simulating Media

f (MHz) [C]	Relative Permittivity [F]	Conductivity (S/m) [F]	ConvF X	ConvF Y	ConvF Z	Alpha [G]	Depth [G] (mm)	Unct. (k=2)
450	43.5	0.87	11.39	11.39	11.39	0.18	1.20	± 13.4 %

[C] Frequency validity above 300 MHz of ± 100 MHz only applies for DASY v4.4 and higher (see Page 2), else it is restricted to ± 50 MHz. The uncertainty is the RSS of the ConvF uncertainty at calibration frequency and the uncertainty for the indicated frequency band. Frequency validity below 300 MHz is ± 10, 25, 40, 50 and 70 MHz for ConvF assessments at 30, 64, 128, 150 and 220 MHz respectively. Above 5 GHz frequency validity can be extended to ± 110 MHz.
[F] At frequencies below 3 GHz, the validity of tissue parameters (ε and σ) can be relaxed to ± 10% if liquid compensation formula is applied to measured SAR values. At frequencies above 3 GHz, the validity of tissue parameters (ε and σ) is restricted to ± 5%. The uncertainty is the RSS of the ConvF uncertainty for indicated target tissue parameters.
[G] Alpha/Depth are determined during calibration. SPEAG warrants that the remaining deviation due to the boundary effect after compensation is always less than ± 1% for frequencies below 3 GHz and below ± 2% for frequencies between 3-6 GHz at any distance larger than half the probe tip diameter from the boundary.

©2015 A Test Lab Techno Corp.

DASY/EASY - Parameters of Probe: EX3DV4 - SN:3977

Calibration Parameter Determined in Body Tissue Simulating Media

f (MHz) [C]	Relative Permittivity [F]	Conductivity (S/m) [F]	ConvF X	ConvF Y	ConvF Z	Alpha [G]	Depth [G] (mm)	Unct. (k=2)
450	56.7	0.94	11.80	11.80	11.80	0.11	1.25	± 13.4 %

[C] Frequency validity above 300 MHz of ± 100 MHz only applies for DASY v4.4 and higher (see Page 2), else it is restricted to ± 50 MHz. The uncertainty is the RSS of the ConvF uncertainty at calibration frequency and the uncertainty for the indicated frequency band. Frequency validity below 300 MHz is ± 10, 25, 40, 50 and 70 MHz for ConvF assessments at 30, 64, 128, 150 and 220 MHz respectively. Above 5 GHz frequency validity can be extended to ± 110 MHz.
[F] At frequencies below 3 GHz, the validity of tissue parameters (ε and σ) can be relaxed to ± 10% if liquid compensation formula is applied to measured SAR values. At frequencies above 3 GHz, the validity of tissue parameters (ε and σ) is restricted to ± 5%. The uncertainty is the RSS of the ConvF uncertainty for indicated target tissue parameters.
[G] Alpha/Depth are determined during calibration. SPEAG warrants that the remaining deviation due to the boundary effect after compensation is always less than ± 1% for frequencies below 3 GHz and below ± 2% for frequencies between 3-6 GHz at any distance larger than half the probe tip diameter from the boundary.

©2015 A Test Lab Techno Corp.

Frequency Response of E-Field

(TEM-Cell:ifi110 EXX, Waveguide: R22)

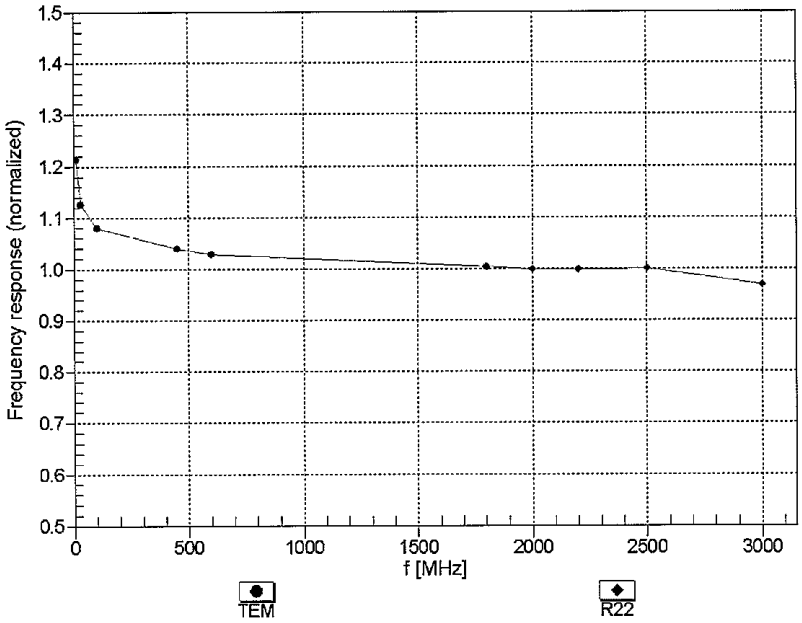

Uncertainty of Frequency Response of E-field: ± 6.3% (k=2)

©2015 A Test Lab Techno Corp.

Receiving Pattern (ϕ), ϑ = 0°

f=600 MHz,TEM

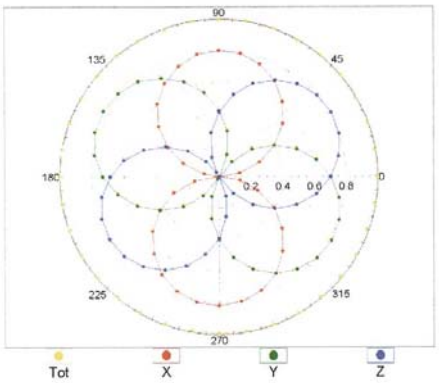

f=1800 MHz,R22

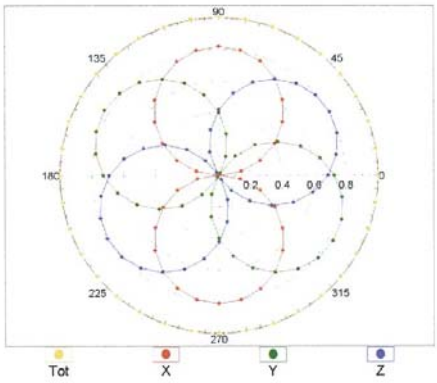

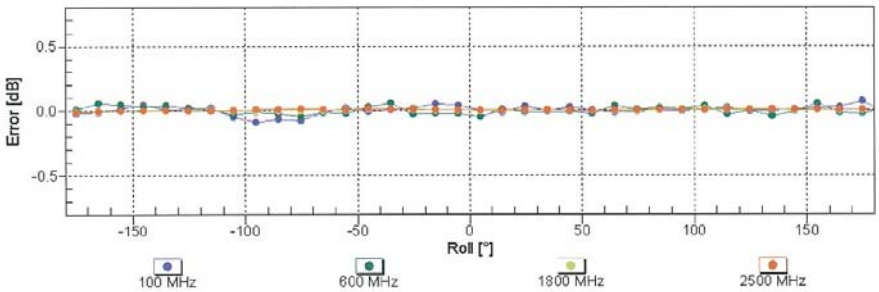

Uncertainty of Axial Isotropy Assessment: ± 0.5% (k=2)

©2015 A Test Lab Techno Corp.

Dynamic Range f(SAR_{head})

(TEM cell , f_{eval}= 1900 MHz)

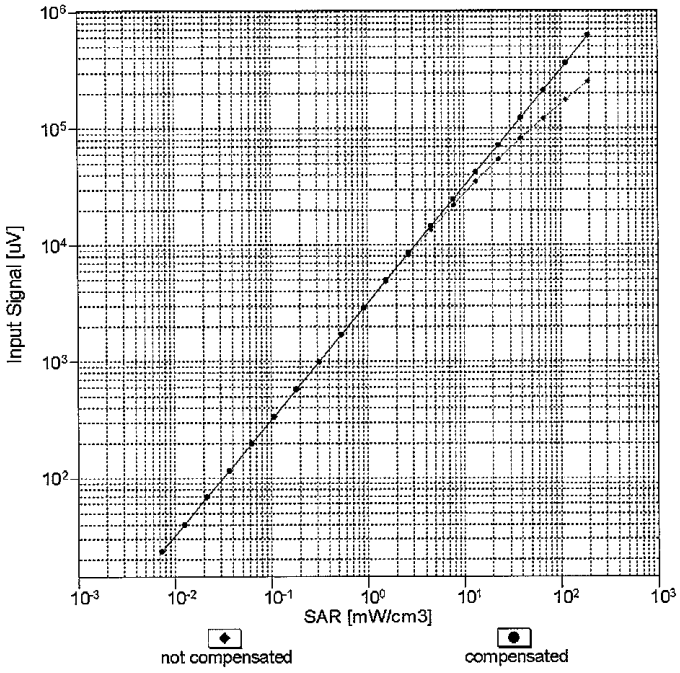

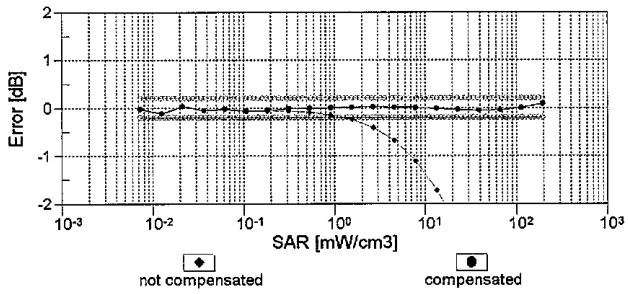

Uncertainty of Linearity Assessment: ± 0.6% (k=2)

©2015 A Test Lab Techno Corp.

Conversion Factor Assessment

f = 450 MHz,WGLS Flat Phantom 4.4

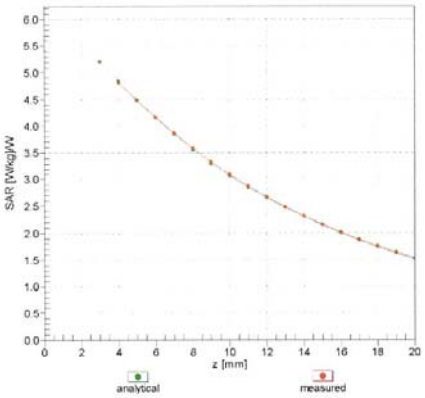

f = 450 MHz,WGLS Flat Phantom 4.4

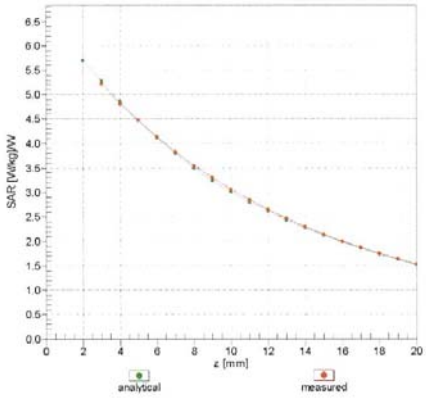

Deviation from Isotropy in Liquid

Error (ϕ, ϑ), f = 900 MHz

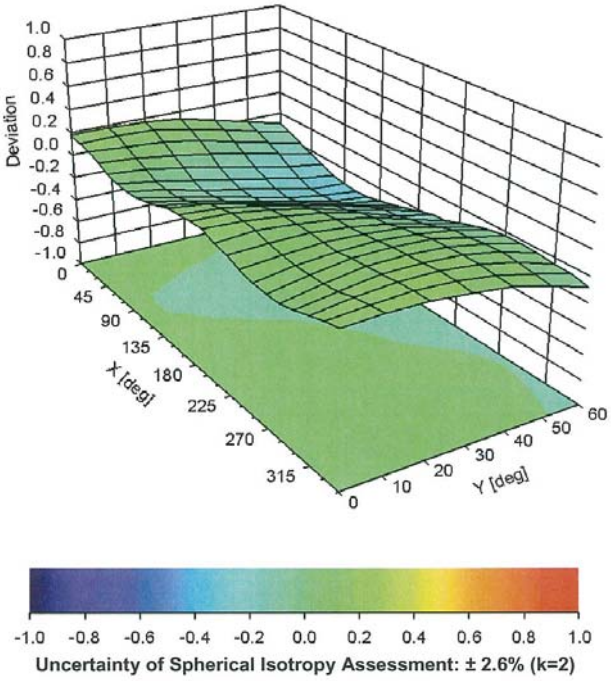

Uncertainty of Spherical Isotropy Assessment: ± 2.6% (k=2)

©2015 A Test Lab Techno Corp.

DASY/EASY - Parameters of Probe: EX3DV4 - SN:3977

Other Probe Parameters

Sensor Arrangement	Triangular
Connector Angle (°)	24.7
Mechanical Surface Detection Mode	enabled
Optical Surface Detection Mode	disabled
Probe Overall Length	337 mm
Probe Body Diameter	10 mm
Tip Length	9 mm
Tip Diameter	2.5 mm
Probe Tip to Sensor X Calibration Point	1 mm
Probe Tip to Sensor Y Calibration Point	1 mm
Probe Tip to Sensor Z Calibration Point	1 mm
Recommended Measurement Distance from Surface	1.4 mm

©2015 A Test Lab Techno Corp.

In Collaboration with
CTTL speag
CALIBRATION LABORATORY
Add: No.51 Xueyuan Road, Haidian District, Beijing, 100191, China
Tel: +86-10-62304633-2079 Fax: +86-10-62304633-2504
E-mail: cttl@chinattl.com Http://www.chinattl.cn

CALIBRATION No. L0570

Client : ATL Certificate No: Z15-97004

CALIBRATION CERTIFICATE

Object	DAE4 - SN: 541
Calibration Procedure(s)	FD-Z11-2-002-01 Calibration Procedure for the Data Acquisition Electronics (DAEx)
Calibration date:	February 03, 2015

This calibration Certificate documents the traceability to national standards, which realize the physical units of measurements(SI). The measurements and the uncertainties with confidence probability are given on the following pages and are part of the certificate.

All calibrations have been conducted in the closed laboratory facility: environment temperature(22±3)°C and humidity<70%.

Calibration Equipment used (M&TE critical for calibration)

Primary Standards	ID #	Cal Date(Calibrated by, Certificate No.)	Scheduled Calibration
Process Calibrator 753	1971018	01-July-14 (CTTL, No:J14X02147)	July-15

	Name	Function	Signature
Calibrated by:	Yu Zongying	SAR Test Engineer	
Reviewed by:	Qi Dianyuan	SAR Project Leader	
Approved by:	Lu Bingsong	Deputy Director of the laboratory	

Issued: February 04, 2015

This calibration certificate shall not be reproduced except in full without written approval of the laboratory.

Certificate No: Z15-97004 Page 1 of 3

In Collaboration with
s p e a g
CALIBRATION LABORATORY
Add: No.51 Xueyuan Road, Haidian District, Beijing, 100191, China
Tel: +86-10-62304633-2079 Fax: +86-10-62304633-2504
E-mail: cttl@chinattl.com Http://www.chinattl.cn

Glossary:

DAE	data acquisition electronics
Connector angle	information used in DASY system to align probe sensor X to the robot coordinate system.

Methods Applied and Interpretation of Parameters:

- *DC Voltage Measurement*: Calibration Factor assessed for use in DASY system by comparison with a calibrated instrument traceable to national standards. The figure given corresponds to the full scale range of the voltmeter in the respective range.

- *Connector angle*: The angle of the connector is assessed measuring the angle mechanically by a tool inserted. Uncertainty is not required.

- The report provide only calibration results for DAE, it does not contain other performance test results.

©2015 A Test Lab Techno Corp.

In Collaboration with
s p e a g
CALIBRATION LABORATORY
Add: No.51 Xueyuan Road, Haidian District, Beijing, 100191, China
Tel: +86-10-62304633-2079 Fax: +86-10-62304633-2504
E-mail: cttl@chinattl.com Http://www.chinattl.cn

DC Voltage Measurement

A/D - Converter Resolution nominal

High Range: 1LSB = 6.1μV , full range = -100...+300 mV
Low Range: 1LSB = 61nV , full range = -1.....+3mV

DASY measurement parameters: Auto Zero Time: 3 sec; Measuring time: 3 sec

Calibration Factors	X	Y	Z
High Range	404.549 ± 0.15% (k=2)	404.414 ± 0.15% (k=2)	404.175 ± 0.15% (k=2)
Low Range	3.96723 ± 0.7% (k=2)	3.93603 ± 0.7% (k=2)	3.97491 ± 0.7% (k=2)

Connector Angle

Connector Angle to be used in DASY system	290.5° ± 1 °

©2015 A Test Lab Techno Corp.