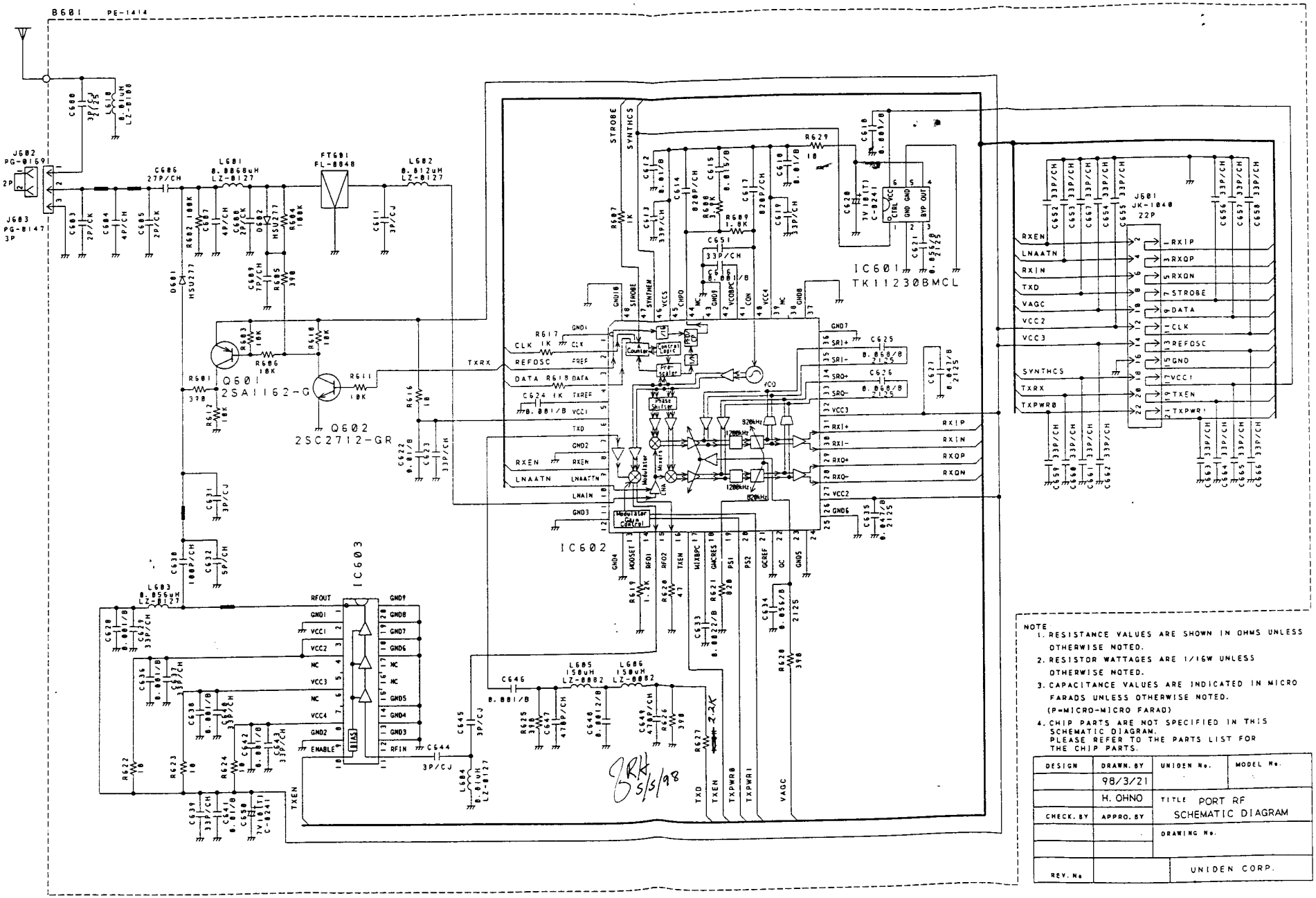

NOTE

1. RESISTANCE VALUES ARE SHOWN IN OHMS UNLESS OTHERWISE NOTED.
2. RESISTOR WATTAGES ARE 1/16W UNLESS OTHERWISE NOTED.
3. CAPACITANCE VALUES ARE INDICATED IN MICRO FARADS UNLESS OTHERWISE NOTED. (P=MICRO-MICRO FARAD)
4. CHIP PARTS ARE NOT SPECIFIED IN THIS SCHEMATIC DIAGRAM. PLEASE REFER TO THE PARTS LIST FOR THE CHIP PARTS.

DESIGN	DRAWN. BY	UNIDEN No.	MODEL No.
	98/3/21		
	H. OHNO	TITLE PORT RF SCHEMATIC DIAGRAM	
CHECK. BY	APPRO. BY		
		DRAWING No.	
REV. No		UNIDEN CORP.	

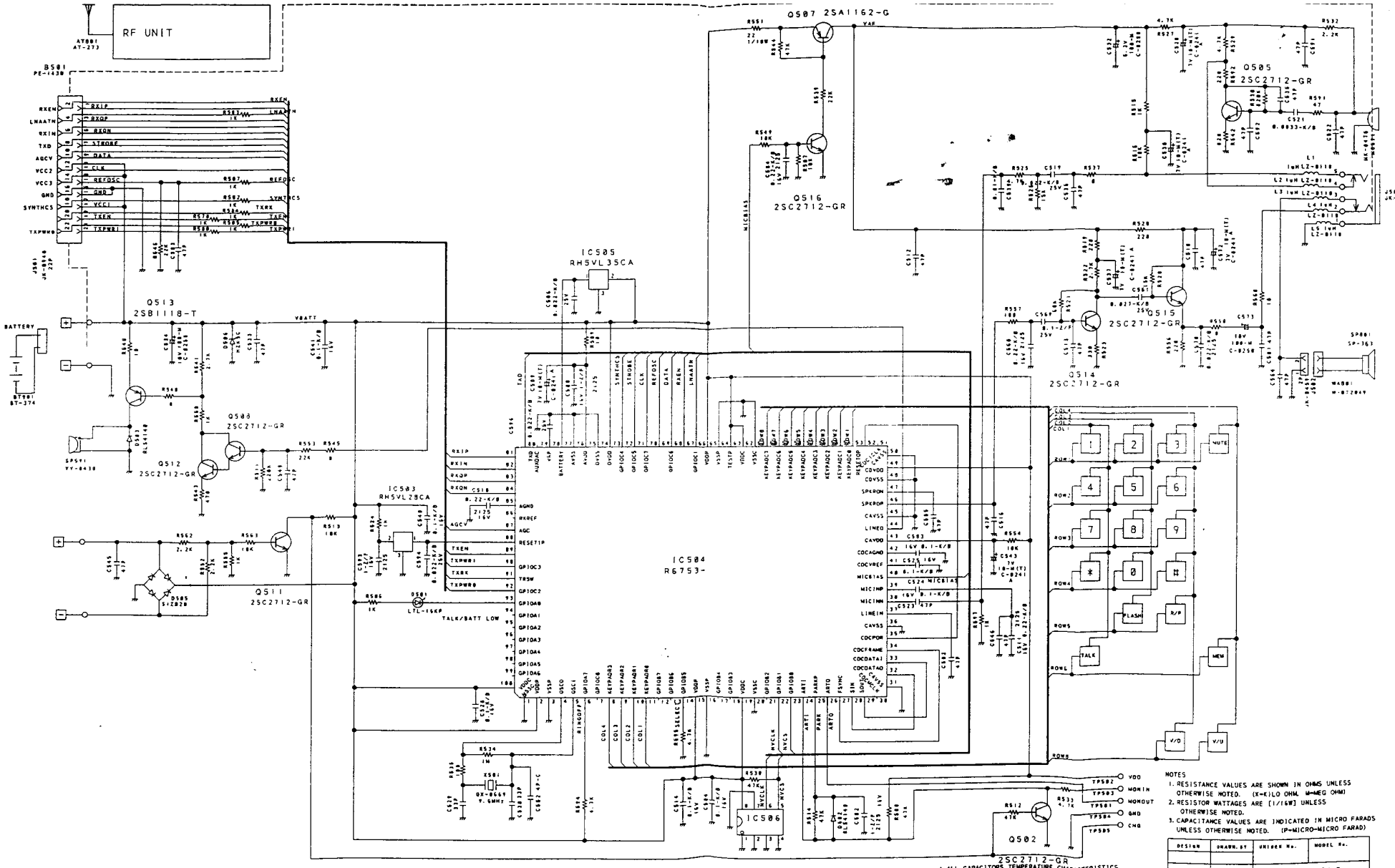

NOTES

1. RESISTANCE VALUES ARE SHOWN IN OHMS UNLESS OTHERWISE NOTED. (K=K)LO OHM M=MEG OHM)
2. RESISTOR WATTAGES ARE (1/16W) UNLESS OTHERWISE NOTED.
3. CAPACITANCE VALUES ARE INDICATED IN MICRO FARADS UNLESS OTHERWISE NOTED. (P=MICRO-MICRO FARAD)
4. ALL CAPACITORS TEMPERATURE CHARACTERISTICS ARE [CH] (LESS THAN 1000PF) OR [B] (MORE THAN 1000PF) UNLESS OTHERWISE NOTED.
5. CHIP PARTS ARE NOT SPECIFIED IN THIS DRAWING PLEASE REFER TO THE PARTS LIST FOR THE CHIP PARTS.
6. CHIP CAPACITORS TYPE ARE (1608) UNLESS OTHERWISE NOTED.

DESIGN	DRAWN. BY	UNIDEN No.	MODEL No.
		TITLE PORTABLE SCHEMATIC DIAGRAM	
CHECK. BY	APPRO. BY		
		DRAWING No.	
REV. No.		UNIDEN CORP.	

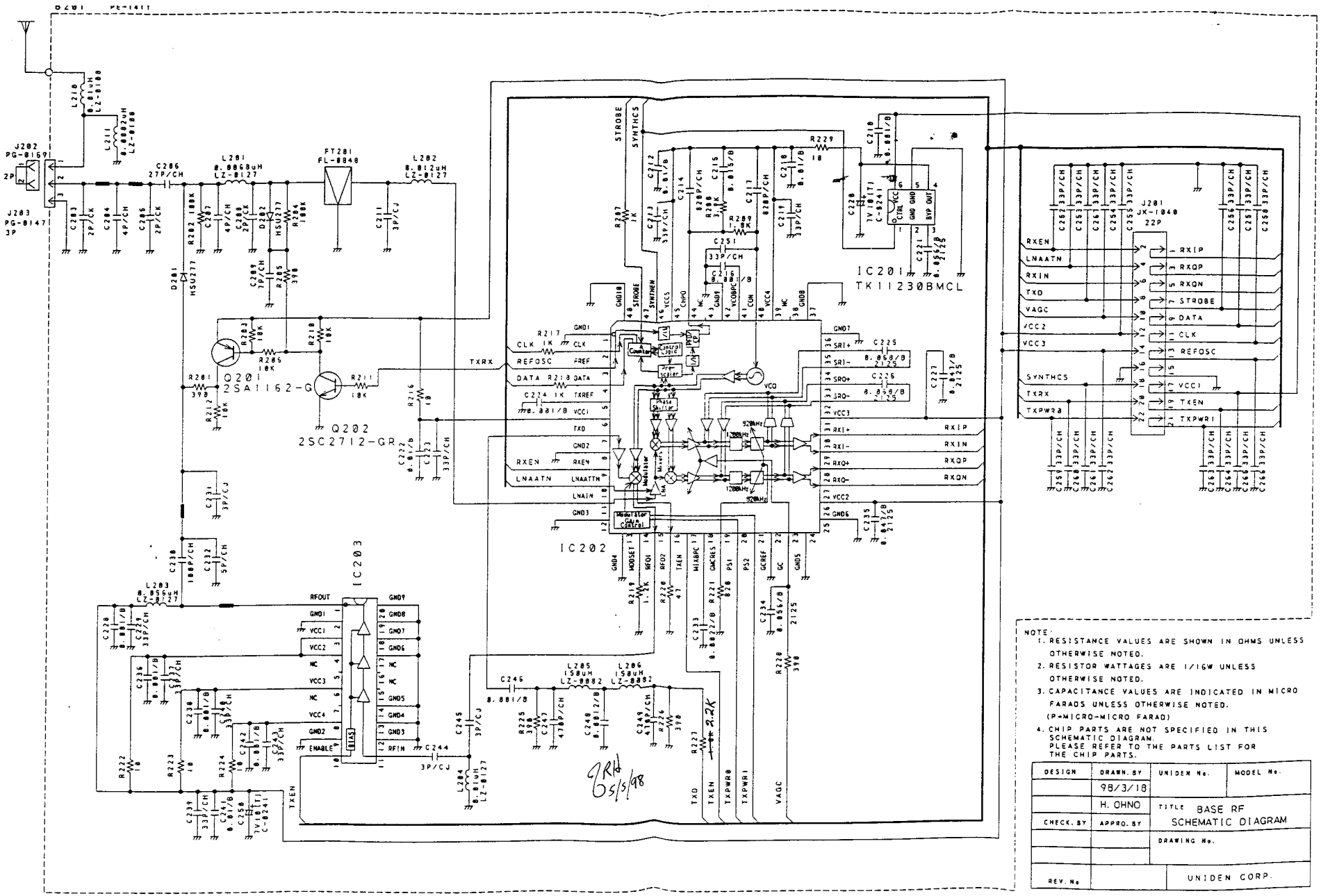

NOTE:

1. RESISTANCE VALUES ARE SHOWN IN OHMS UNLESS OTHERWISE NOTED.
2. RESISTOR WATTAGES ARE 1/16W UNLESS OTHERWISE NOTED.
3. CAPACITANCE VALUES ARE INDICATED IN MICRO FARADS UNLESS OTHERWISE NOTED. (P=MICRO-MICRO FARAD)
4. CHIP PARTS ARE NOT SPECIFIED IN THIS SCHEMATIC DIAGRAM. PLEASE REFER TO THE PARTS LIST FOR THE CHIP PARTS.

DESIGN	DRAWN. BY	UNIDEN No.	MODEL No.
	98/3/18		
	H. OHNO	TITLE BASE RF SCHEMATIC DIAGRAM	
CHECK. BY	APPRO. BY		
		DRAWING No.	
REV. No		UNIDEN CORP.	

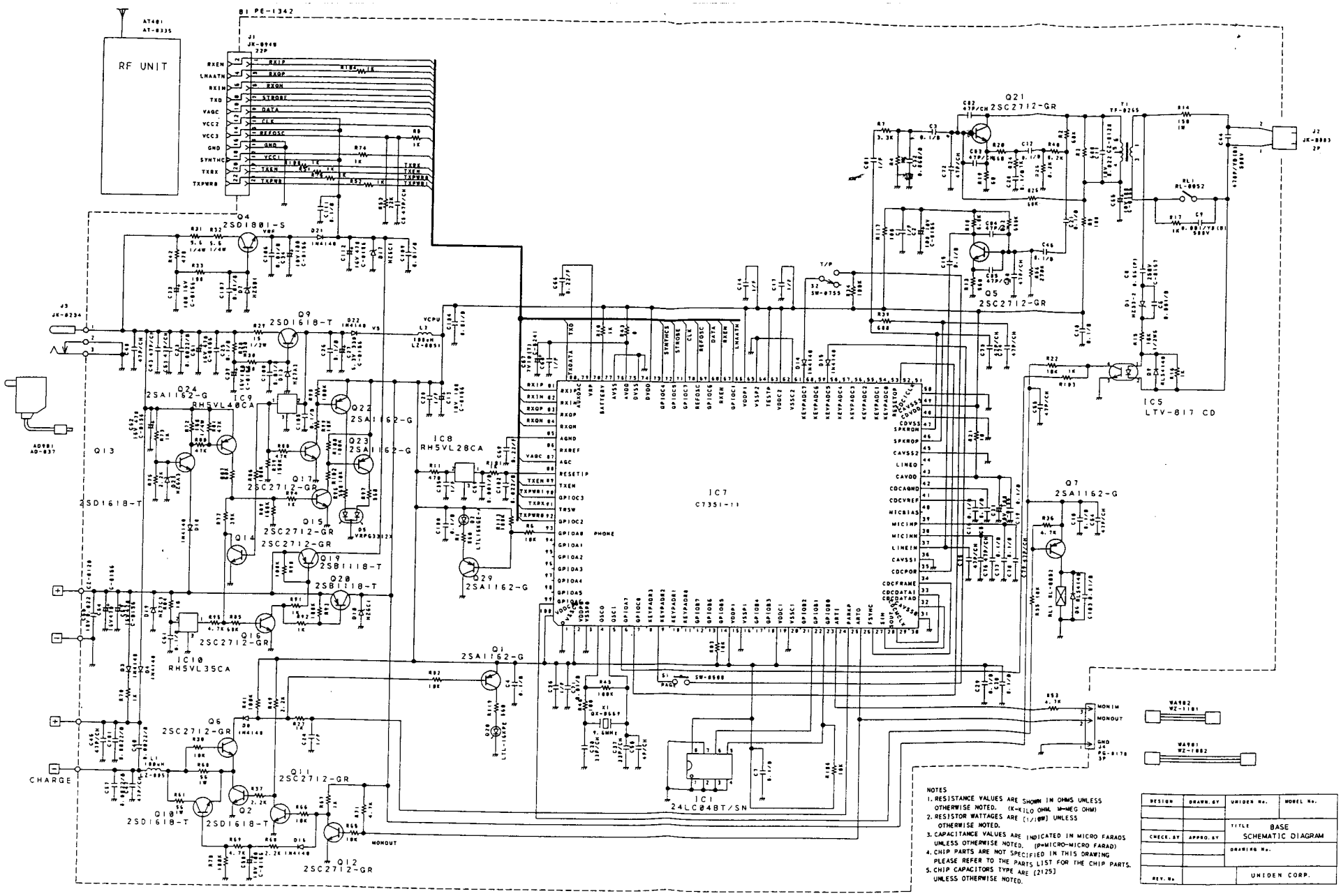

NOTES
1. RESISTANCE VALUES ARE SHOWN IN OHMS UNLESS OTHERWISE NOTED. (K=KILO OHM, M=MEG OHM)
2. RESISTOR WATTAGES ARE (1/10W) UNLESS OTHERWISE NOTED.
3. CAPACITANCE VALUES ARE INDICATED IN MICRO FARADS UNLESS OTHERWISE NOTED. (P=MICRO-MICRO FARAD)
4. CHIP PARTS ARE NOT SPECIFIED IN THIS DRAWING PLEASE REFER TO THE PARTS LIST FOR THE CHIP PARTS.
5. CHIP CAPACITORS TYPE ARE (2125) UNLESS OTHERWISE NOTED.

DESIGN	DRAWN.BY	UNIDEN No.	MODEL No.
		TITLE	BASE SCHEMATIC DIAGRAM
CHECK.BY	APPRO.BY	DRAWING No.	
REV. No.		UNIDEN CORP.	