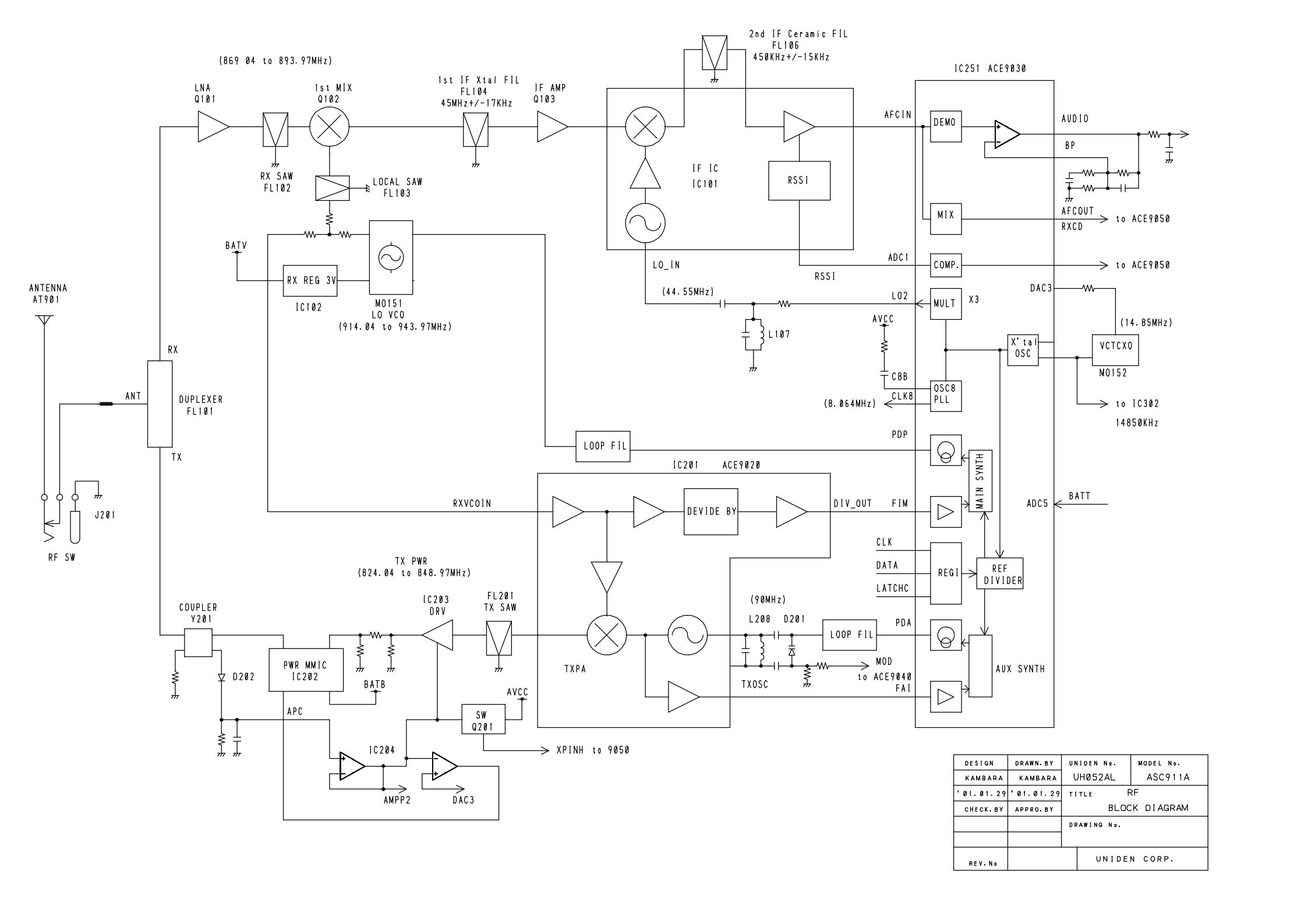

DESIGN	DRAWN. BY	UNIDEN No.	MODEL No.
KAMBARA	KAMBARA	UH052AL	ASC911A
'01.01.29	'01.01.29	TITLE RF	
CHECK. BY	APPRO. BY	BLOCK DIAGRAM	
		DRAWING No.	
REV. No		UNIDEN CORP.	

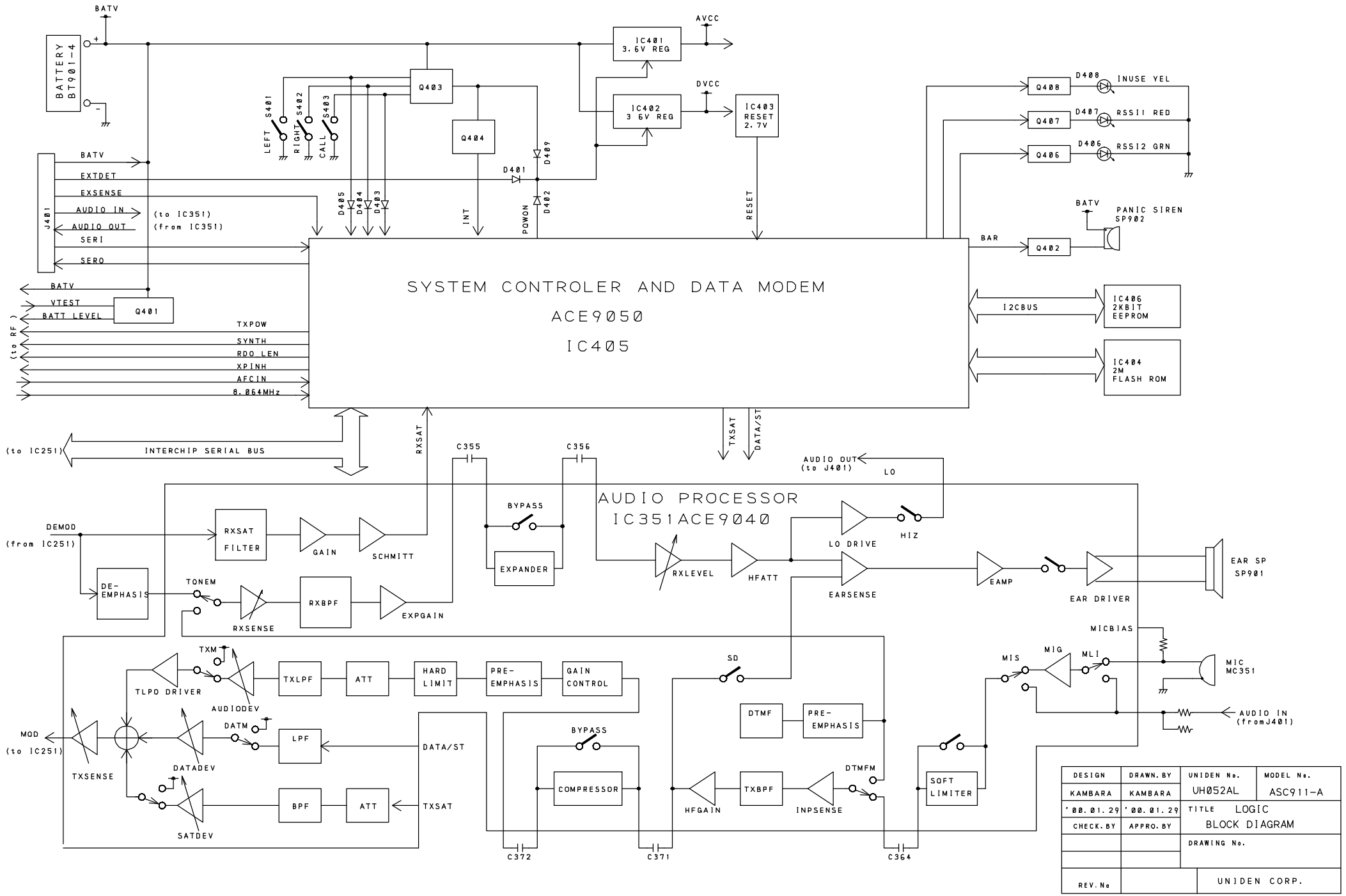

DESIGN	DRAWN. BY	UNIDEN No.	MODEL No.
KAMBARA	KAMBARA	UH052AL	ASC911-A
'00.01.29	'00.01.29	TITLE LOGIC BLOCK DIAGRAM	
CHECK. BY	APPRO. BY		
		DRAWING No.	
REV. No		UNIDEN CORP.	