IBM

ThinkPad i Series 1200/1300

User's Referen

Note: Before using this information and the product it supports, be sure to read the general information under “Safety information” on page v, and “Notices” on page 54.

First Edition (July 2000)

The following paragraph does not apply to the United Kingdom or any country where such provisions are inconsistent with local law:

INTERNATIONAL BUSINESS MACHINES CORPORATION PROVIDES THIS PUBLICATION "AS IS" WITHOUT ANY WARRANTY OF ANY KIND, EITHER EXPRESS OR IMPLIED, INCLUDING, BUT NOT LIMITED TO, THE LIMITED WARRANTIES OF MERCHANTABILITY OR FITNESS FOR A PARTICULAR PURPOSE. Some states do not allow disclaimers or express or implied warranties in certain transactions; therefore, this statement may not apply to you.

This publication could include technical inaccuracies or typographical errors. Changes are periodically made to the information herein; these changes will be incorporated in new editions of the publication. IBM may make improvements or changes in the products or the programs described in this publication at any time.

Requests for technical information about IBM products should be made to your IBM Authorized Dealer or your IBM Marketing Representative.

© **Copyright International Business Machines Corporation 2000. All rights reserved.** Note to US Government Users — Documentation related to restricted rights — Use, duplication, or disclosure is subject to restrictions set forth in GSA ADP Schedule Contract with IBM Corp.

Contents

Safety information v

Handling the ThinkPad computer xiii
ThinkPad do not's xiv
ThinkPad do's xvii
Cleaning your computer xviii
Carrying your computer xix
Extending the usefulness of the battery xx

System overview 1
Features 2
Specifications 4
Using your online user's guide 6
Starting the BIOS Setup Utility 7

Protecting your computer 9
Using passwords 10
Power-on password 10
Screen-saver password 10
Hard-disk password 11
Windows password 11
Setup password 12
Network password 12
Using locks 13

Solving computer problems 15
Replacing the hard disk drive 16
Troubleshooting 18
Error codes or messages 18
Errors without codes or messages 20
Input problems 21
Battery problems 23
Standby or hibernation problems 24
Power switch problem 26
Hard-disk drive problems 27
CD-ROM or DVD-ROM Problems 28

© Copyright IBM Corporation 2000

Computer display problems 30
Software problems 31
Other problems 32
Testing your computer 33
Backing up your system 34
Backing up your system configuration 34
Backing up your data 35
Recovering lost or damaged software 35
Getting service 40
ThinkPad Web site 40
Recording sheets 41

Appendix A. Product warranty and notices 43
Notices 54
Year 2000 readiness and instructions 54
Trademarks 55
Electronic emission notices 55
Telecommunication notice 57
Notice for Australia 61
Regions where ThinkPad i Series 1200/1300 has ThinkPad modem integrated 61
Notice to New Zealand users of the "Ambit U98.005.C.00 Internal Modem" 62
Notice for European Union countries 63

Index 65

Safety information

DANGER

Electrical current from power, telephone, and communication cables is hazardous. To avoid shock hazard, connect and disconnect cables as shown below when installing, moving, or opening the covers of this product or attached devices. If the 3–pin power cord is provided with this product, it must be used with a properly grounded outlet.

© Copyright IBM Corporation 2000

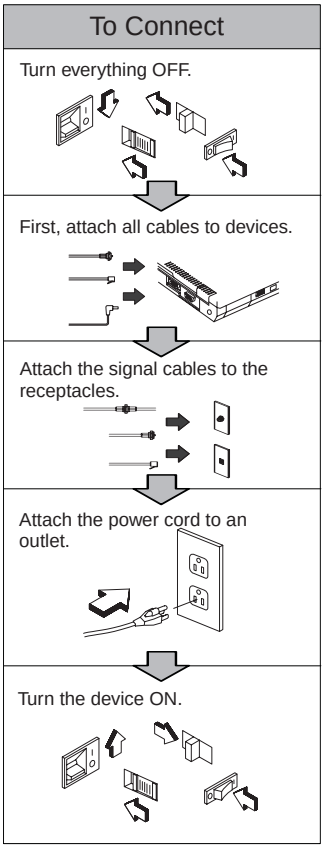
To Connect
Turn everything OFF.
First, attach all cables to devices.
Attach the signal cables to the receptacles.
Attach the power cord to an outlet.
Turn the device ON.

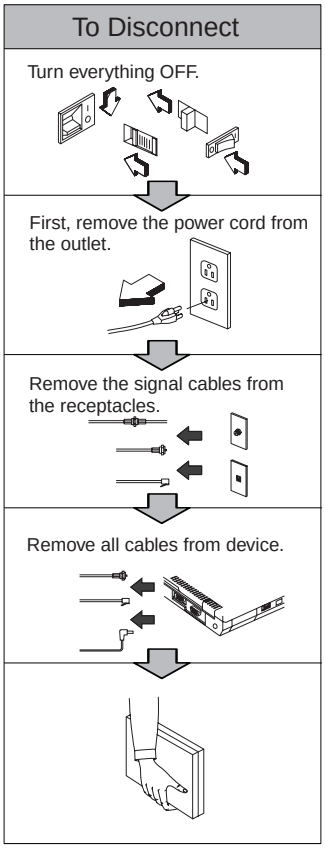
To Disconnect
Turn everything OFF.
First, remove the power cord from the outlet.
Remove the signal cables from the receptacles.
Remove all cables from device.

DANGER

Reduce the risk of fire and electric shock by always following basic safety precautions, including the following:

- **Do not use your computer in or near water.**
- **During electrical storms:**
  - **Do not use your computer with the telephone cable connection.**
  - **Do not connect the cable to or disconnect it from the telephone outlet on the wall.**

DANGER

If the rechargeable battery pack is incorrectly placed, there is a danger of an explosion. The battery pack contains a small amount of harmful substances. To avoid possible injury:

- **Replace only with a battery of the type recommended by IBM, or an equivalent.**
- **Keep the battery pack away from fire.**
- **Do not expose it to water or rain.**
- **Do not attempt to disassemble it.**
- **Do not short-circuit it.**
- **Keep it away from children.**

Do not put it in trash that is disposed of in landfills. When disposing the battery, comply with local ordinances or regulations and your company's safety standards.. In the United States, call IBM at 1-800-IBM-4333 for information on disposal.

DANGER

There is a danger of an explosion if the backup battery is incorrectly replaced.

The lithium battery (IBM P/N 02K6694 UL-recognized component [file no. MH12568]) contains lithium and can explode if it is not properly handled or disposed of.

Replace only with a battery of the same type.

To avoid possible injury or death, do not: (1) throw or immerse the battery into water, (2) allow it to heat to more than 100°C (212°F), or (3) attempt to repair or disassemble it. Dispose of it as required by local ordinances or regulations and your company's safety standards.

CAUTION:
The fluorescent lamp in the liquid crystal display (LCD) contains mercury. Do not put it in trash that is disposed of in landfills. Dispose of it as required by local ordinances or regulations.

The LCD is made of glass, and rough handling or dropping the computer can cause the LCD to break. If the LCD breaks and the internal fluid gets into your eyes or on your hands, immediately wash the affected areas with water for at least 15 minutes; if any symptoms are present after washing, get medical care.

CAUTION:
To reduce the risk of fire, use only No. 26 AWG or cable with a higher rating.

The CD-ROM or DVD-ROM drive of the ThinkPad i Series 1200/1300 computer is a laser product. The CD-ROM or DVD-ROM drive classification label (shown below) is located on the top of the drive.

CLASS 1 LASER PRODUCT
LASER KLASSE 1

LUOKAN 1 LASERLAITE
APPAREIL A LASER DE CLASSE 1
KLASS 1 LASER APPARAT

The CD-ROM or DVD-ROM drive is certified in the U.S. to conform to the requirements of the Department of Health and Human Services 21 Code of Federal Regulations (DHHS 21 CFR) Subchapter J for Class 1 laser products.

In other countries, the drive is certified to conform to the requirements of EN60825.

CAUTION:
Do not open the CD-ROM or DVD-ROM drive; no user adjustments or serviceable parts are inside.

Use of controls, adjustments, or the performance of procedures other than those specified may result in hazardous radiation exposure.

Class 1 laser products are not considered to be hazardous. The CD-ROM or DVD-ROM drive has an internal, Class 1, 0.5-milliwatt, aluminum gallium-arsenide laser that operates at a wavelength of 760 to 810 nanometers. The design of the laser system and the CD-ROM or DVD-ROM drive ensures that there is no exposure to laser radiation above a Class 1 level during normal operation, user maintenance, or servicing.

Some drives contain an embedded Class 3A laser diode. Note this warning:

DANGER

Emits visible and invisible laser radiation when open. Avoid direct eye exposure. Do not stare into the beam or view it directly with optical instruments.

Handling the ThinkPad computer

Notebook computers are precision electronic devices that require a bit of careful handling. Although your computer is designed and tested to be a durable notebook computer that functions reliably in normal work environments, you must handle it carefully.

This section provides tips for handling notebook computers in general. Some descriptions might not suit your situation. Check your shipping checklist to confirm the items you get with your computer.

By following these handling tips, you will get the most use and enjoyment out of your computer for a long time to come.

Refer to the Online User's Guide for more information. See “Using your online user's guide” on page 6.

© Copyright IBM Corporation 2000

ThinkPad do not's

- Do not subject your computer to physical punishment, such as dropping or bumping.
- Do not place heavy objects on your computer.
- Do not spill or allow liquids into your computer.
- Do not use your computer in or near water (to avoid the danger of electrical shock).
- Do not pack your computer in a tightly packed suitcase or bag. Your LCD might be damaged.

  Note: A scratchlike marking on your LCD might be a stain transferred from the keyboard or from the TrackPoint stick when the cover was pressed from the outside. Wipe such a stain gently with a dry soft cloth. If the stain remains, moisten the cloth with an LCD cleaner and wipe the stain again. Be sure to dry the LCD before closing it.
- Do not disassemble your computer. Only an authorized IBM ThinkPad repair technician should disassemble and repair your computer.
- Do not scratch, twist, hit, or push the surface of your computer display.
- Do not place any objects between the display and keyboard.
- Do not pick up or hold your computer by the display. When picking up your open computer, hold it by the bottom (keyboard) half.
- Do not modify or tape the latches to keep the display open or closed.
- Do not turn your computer over while the ac adapter is plugged in. This could break the adapter plug.
- Do not move the computer when the hard disk drive is accessing data (when the indicator is blinking).
- Do not use or store your computer where the temperature is below 5° C or above 35° C (41° F and 95° F).

- Do not place your computer closer than 13 cm (5 in.) to any electrical appliance that generates a strong magnetic field, such as a motor, a magnet, a TV, a refrigerator, or large audio speakers.
- Do not put an operating cellular phone on the computer. The phone might cause malfunction in the computer system.
- Do not hard-mount your computer in a vehicle or anywhere that it is subject to strong vibration.
- Do not crush, drop, or physically punish the external or removable hard disk, or diskette drive when it is outside your computer.
- Do not press on the middle part of the diskette drive, CD-ROM or DVD-ROM drive.
- Do not insert a diskette at an angle. Inserting the diskette into the drive in this way can damage the drive.
- Do not attach more than one label to a diskette, and do not allow the label to come loose. Multiple or loose labels can detach or tear and then lodge in the drive.
- Do not touch the lens on the CD-ROM or DVD-ROM tray.
- Do not close the CD-ROM or DVD-ROM tray until you hear the CD or DVD click into the center pivot of the CD-ROM or DVD-ROM drive.
- Do not touch the surface of a CD; handle the CD only by its edges.
- Do not connect the modem to a PBX (private branch exchange) or other digital telephone extension line. **Your computer can use only a public-switched telephone network (PSTN).** Use of a phone line other than PSTN can damage your modem. If you are not sure which kind of phone line you are using, contact your telephone company. Many hotels or office buildings use digital telephone extension lines, so check before connecting the telephone cable in such places.
- Do not leave the base of your computer in contact with your lap or any part of your body for an extended period when the computer is functioning or when the battery is charging. Your computer dissipates some heat during normal operation. This heat is a function of the level of system activity and battery charge level.

Extended contact with your body, even through clothing, could cause discomfort or, eventually, a skin burn.

ThinkPad do's

Treat your computer like precision electronic machinery.

- When installing your hard disk drive, follow the instructions in the Online User's Guide. (You can access the online book by pressing the ThinkPad button.) Apply pressure to the drive only where needed on the device.
- If you exchange drives in your computer, reinstall the plastic bezel faces (if supplied).
- Store your external and removable hard disk, and diskette drives in the appropriate container or packaging when they are not being used.
- Choose a quality carrying case that will protect your computer.
- Store packing materials safely out of reach of children to prevent the risk of suffocation from plastic bags.
- Register your ThinkPad products with IBM (refer to the Web page: http://www.pc.ibm.com/register). This can help authorities return your computer to you if it is lost or stolen. Registering your computer also enables IBM to notify you about possible upgrades.
- Check the IBM Web page (http://www.ibm.com/thinkpad) periodically to get current information about your computer.

Cleaning your computer

Occasionally clean your computer as follows:

- Use a soft cloth moistened with nonalkaline detergent to wipe the exterior of the computer.
- Don't spray cleaner directly on the display or keyboard.
- Gently wipe the LCD with a dry, soft cloth.

Carrying your computer

When carrying your computer, follow these instructions to prevent possible damage to it and your data:

1. Remove any media from the CD-ROM or DVD-ROM drive or diskette drive.
2. Turn off all attached devices.
3. Turn off the computer, or enter standby or hibernation mode; then close the LCD. Make sure the standby indicator is on when the computer is in standby mode, or the power indicator is off when it is turned off or in hibernation mode.
4. Unplug all external cables and cords connected to your computer.
5. Make sure all computer doors and covers are closed.
6. Use a quality carrying case that provides adequate cushion and protection.

Note: Do not move the computer when the hard disk drive is accessing data—that is, when the indicator is blinking. Make sure the indicator is off before you carry the computer.

Extending the usefulness of the battery

The amount of battery power consumed by your computer depends on such conditions as the frequency of use, the operating temperature, and the period in storage (if unused). The following tips can help you to extend the life of your battery:

- Do not recharge the battery pack until all of its power is used. Recharging a battery pack that is not completely discharged can shorten battery life.
- Once you start charging the battery pack, do not use it until it is fully charged.
- Whenever possible, use the ThinkPad battery power-saving modes:
  - Screen blank
  - Standby
  - Hibernation

  For more information, refer to the online user's guide.
- Decrease the brightness of the LCD.
- Use power management. Each operating system comes with its own power management system.
- If you will not use the computer for a long period, remove the battery pack and keep it in a cool place.

System overview

Features 2
Specifications 4
Using your online user's guide 6
Starting the BIOS Setup Utility 7

© Copyright IBM Corporation 2000

Features

Processor

Intel® Mobile Pentium™ processor with Intel® SpeedStep™ technology or Intel® Mobile Celeron™ processor with on-die external cache

Memory

- Built-in: 32MB or 64MB
- Maximum: 192 MB

Storage device

- 2.5–inch hard disk drive

Display

The color display uses TFT technology or HPA technology

- Resolution:
  - LCD: Up to 1024–by–768 resolution on the 13.3–inch TFT LCD; Up to 800–by–600 resolution on the 12.1–inch TFT/HPA LCD or 13.0–inch HPA LCD
  - External monitor: Up to 1280–by–1024
- Brightness control
- Contrast control (available only on HPA models)

Keyboard

- 87–key, 88–key, or 92–key
- TrackPoint® pointing device
- Easy Launch buttons
- Fn key function
- Windows keys

External diskette drive — available on selected models

To get the best performance from your diskette drive, use high-quality diskettes (such as IBM diskettes) that meet or exceed the following standards:

- **1–MB, 3.5–inch, unformatted diskette:**
  - ANSI (American National Standards Institute) X3.137
  - ISO (International Standards Organization) 8860
  - ECMA (European Computer Manufacturers Association) 100
- **2–MB, 3.5–inch, unformatted diskette:**
  - ANSI X3.171
  - ISO 9529
  - ECMA 125

Internal CD-ROM or DVD-ROM drive

- CD–ROM: 24X speed maximum
- DVD-ROM: 8X speed

External interface

- Parallel connector (IEEE 1284A)
- External-input-device connector (PS/2)
- External-monitor connector
- PC Card slot (one Type I, Type II, or Type III PC Card)
- Headphone jack
- Microphone jack (supports a self-battery-powered condenser microphone)
- Universal Serial Bus (USB) connector (two)
- Telephone connector
- Network connector (Ethernet 10BaseT or 100BaseT) — available on selected models
- IEEE 1394 connector — available on selected models

Specifications

Size

- Width: 313 mm (12.32 in.)
- Depth: 252 mm (9.92 in.)
- Height: 35.4 mm (1.39 in.) for models with a 13.3-inch display; 36.6 mm (1.44 in.) for other models

Environment

- Temperature (at altitudes less than 2438 m [8000 ft.]):
  - Operating with no diskette: 5°C to 35°C (41°F to 95°F)
  - Operating with a diskette: 10°C to 35°C (50°F to 95°F)
  - Non-operating: -20°C to 60°C (-4°F to 140°F)

  Note: When you charge the battery pack, its temperature must be at least 10°C (50°F).
- Relative humidity:
  - Operating with no diskette: 8% to 95%
  - Operating with a diskette: 8% to 80%
- Maximum altitude: 3048 m (10000 ft.) in unpressurized conditions
  - Maximum temperature at 2438 (8000 ft.) thru 3048 m (10000 ft.): 31.3°C (88°F)

Heat output

- Approximately 48 Kcal per hour

Electrical (ac adapter)

- Sine-wave input, at 50 to 60 Hz is required
- The input rating of the ac adapter: 100–240 V ac, 50/60 Hz

Battery pack

- Nickel Metal Hydride
  - Nominal voltage: 9.6 V dc

– Capacity: 4.5 AH

Using your online user's guide

Your computer offers full information and documentation online. There is no need to carry heavy manuals or other reference books.

Online help is provided by ThinkPad Assistant. You can access ThinkPad Assistant by pressing the unique ThinkPad Button to open Access ThinkPad. There, you can do a Quick Search or search the full text of the help system. Alternatively, you can go to ThinkPad Assistant by clicking **Start** → **Programs** → **ThinkPad Information**.

ThinkPad Assistant has the following sections:

- About your ThinkPad
- Everyday use
- Communicate
- Home and travel
- Enhancements
- Maintenance and upgrades
- Security
- Problem-solving
- How to reach IBM

When you are logged onto the Internet, click one of the Internet portal buttons in Access ThinkPad.

- Get help and user support
- Update software
- Find business solutions
- Learn about accessories that can help make you even more productive

Starting the BIOS Setup Utility

Your computer provides a program called BIOS Setup Utility, which enables you to configure your computer:

- **System Information:** View information about the computer.
- **Basic System Settings:** Set date and time.
- **Startup Configuration:** Set startup options.
- **Onboard Devices Configuration:** Set device resource settings.
- **System Security:** Set a password.
- **Load Default Settings:** Load the default settings for all parameters.

To start the BIOS Setup Utility, do as follows:

1. Remove any diskette from the external diskette drive, and remove any disc from the CD-ROM or DVD-ROM drive; then turn off the computer.
2. Turn on the computer.
3. While the ThinkPad logo is being displayed, the following lines appear:

   ```
   Press F1 for IBM BIOS Setup Utility
   Press F12 to choose temporary boot device
   ```

   Press **F1**.

   The BIOS Setup Utility menu appears:

Starting the BIOS Setup Utility

BIOS Utility
System Information Basic System Settings Startup Configuration Onboard Devices Configuration System Security Load Default Settings
↑↓ = Move highlight bar, ↵ = Select, Esc = Exit

4. Move to an item you want to change using the up/down arrow keys, and press **Enter**.

   A submenu is displayed.

5. Change the items you wish to change.

   To change the value of an item, use the left/right arrow keys.

6. Press **Esc** to exit from the submenu.

7. Press **Esc** from the main menu and press **Enter** to save your changes and exit from the BIOS Setup Utility menu.

   Your computer restarts.

   Note: If you would like to discard your changes, select **No** and press **Enter**.

Protecting your computer

This chapter provides information about how to protect your computer from theft or unauthorized use.

Using passwords 10
- Power-on password 10
- Screen-saver password 10
- Hard-disk password 11
- Windows password 11
- Setup password 12
- Network password 12

Using locks 13

© Copyright IBM Corporation 2000

Using passwords

To make sure only authorized persons can work on your computer, you can set different kinds of passwords. Prospective users will have to know the proper passwords in order to access your computer or data.

You can set the following passwords on your computer:

- Power-on password
- Screen-saver password
- Hard-disk password
- Windows password
- Setup password
- Network password

Power-on password

You can set a power-on password to protect your computer against access by unauthorized users.

If you set a power-on password, the password prompt appears on the screen when you turn on the computer. You must enter the correct password to start using the computer.

Note: If you forget your power-on password, you cannot reset it. You must take the computer to an IBM reseller or IBM marketing representative to have the password cancelled. Proof or purchase is required, and an additional charge might be required for the service.

To establish a power-on password, refer to the Online User's Guide.

Screen-saver password

You can set a screen-saver password. Once the screen saver has started, only those who know the password can exit the screen saver and resume operating the computer.

Note: The screen-saver password does not thoroughly protect your computer from unauthorized users. An unauthorized user

could turn the computer off and then on to restart Windows without knowing your screen-saver password.

To set a screen-saver password, refer to the Online User's Guide.

Hard-disk password

The hard disk password provides an extra measure of security. Even if you set a power-on password, another user can remove the hard disk drive in your computer and put it in a different computer to access your data. If you set a hard disk password, however, another person cannot access the data on your hard disk without knowing the password. It provides the following features:

- You need to type the hard disk password at startup.
- If the hard disk drive is moved to another computer, the hard disk password must be typed at startup. Therefore, unauthorized users cannot access your hard disk even if the drive is removed from the computer.
- The hard disk password is required when the computer resumes from hibernation mode.

Note: If an incorrect hard disk password is entered three times, the system halts.

Attention

If you forget your hard disk password, you can no longer access the hard disk. The password cannot be reset and you will lose all data and files on the hard disk. To use the computer, you will need to replace the hard disk. This replacement will incur expenses for parts and labor.

Windows password

When you start your ThinkPad computer and the Windows operating system opens, Windows requireds you to enter a user ID and a password.

To set a Windows password, refer to the Online User's Guide.

Setup password

The setup password protects the system information stored in the BIOS Utility so that without knowing the password, nobody can change the configuration of the computer.

Attention

If you forget your setup password, you cannot reset it. You must take the computer to an IBM reseller or IBM marketing representative to have the password cancelled. Proof or purchase is required, and an additional charge might be required for the service.

To establish a setup password, refer to the Online User's Guide.

Network password

If you work on a local area network (LAN) with your ThinkPad computer, your LAN administrator may have set passwords to restrict access to various parts of the network.

If you are authorized to access restricted areas of your LAN, you will need to establish network passwords in Windows.

To establish your network password in Windows, refer to the Online User's Guide.

Using locks

You can attach a mechanical lock to your computer, to help prevent it from being removed without your permission.

Attach a mechanical lock to the keyhole on the rear side of the computer; then secure the chain on the lock to a secure stationary object. Refer to the instructions shipped with the mechanical lock.

Note: You are responsible for evaluating, selecting, and implementing the locking devices and security features you choose to use. IBM makes no comments, judgments, or warranties about the function, quality, or performance of locking devices and security features.

Solving computer problems

Replacing the hard disk drive 16
Troubleshooting 18
Error codes or messages 18
Errors without codes or messages 20
Input problems 21
Battery problems 23
Standby or hibernation problems 24
Power switch problem 26
Hard-disk drive problems 27
CD-ROM or DVD-ROM Problems 28
Computer display problems 30
Software problems 31
Other problems 32
Testing your computer 33
Backing up your system 34
Backing up your system configuration 34
Backing up your data 35
Recovering lost or damaged software 35
Recovering pre-installed software 35
Using the ThinkPad Software Selections CD 38
Getting service 40
ThinkPad Web site 40
Recording sheets 41
Option List 41
Identification numbers 41
Problem recording sheet 41

© Copyright IBM Corporation 2000

Replacing the hard disk drive

You can increase the storage capacity of your computer by replacing the hard disk drive with one of greater capacity. You can purchase a new hard disk drive from your IBM reseller or IBM marketing representative.

Note: Replace the hard disk drive only if you upgrade it or have it repaired. The connectors and bay of the hard disk drive were not designed for frequent changes, or drive swapping.

Attention: Handling a hard disk drive:

- Do not drop the drive or subject it to physical shocks.
- Do not apply pressure to the cover of the drive.
- Do not touch the connector.

Notes:

1. The drive is very sensitive. Incorrect handling can cause damage and permanent loss of data on the hard disk.
2. Before removing the hard-disk drive, make a backup copy of all the information on the hard disk, and then turn the computer off.
3. Never remove the drive while the system is operating, in standby mode, or in hibernation mode.

To replace the hard disk drive, do the following:

1. Turn off the computer; then disconnect the ac adapter and all cables from the computer.
2. Close the computer display, and turn the computer over.
3. Remove the battery.
4. Loosen the coin screw that secures the hard-disk drive **(1)**. You can use a coin in the slot of the screw.

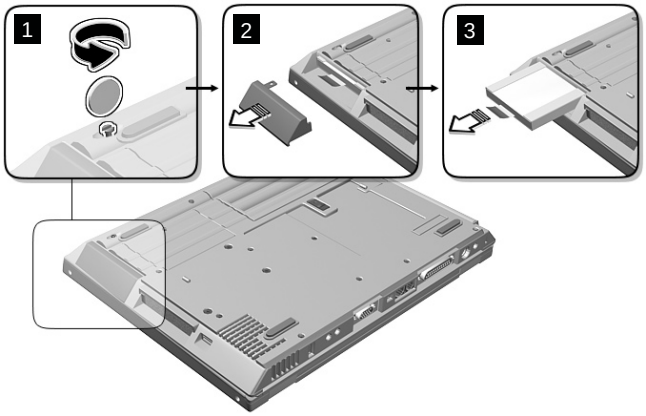

5. Remove the hard-disk drive cover by pulling it away from the computer **(2)**.
6. Pull on the hard-disk drive tab and pull out the hard-disk drive **(3)**.
7. Insert the hard-disk drive into the hard-disk drive bay; then firmly re-install the hard-disk drive cover and secure it with the coin-screw.
8. Reinstall the battery.
9. Turn the computer over. Connect the ac adapter and cables to the computer.

Troubleshooting

Error codes or messages

Problem	Cause and action
006 (Equipment Configuration Error)	Restart the computer. If the problem persists, have the computer serviced.
070 (Real Time Clock Error) 071 (CMOS Battery Bad)	Have the computer serviced.
072 (CMOS Checksum Error)	Do as follows: 1. Enter the BIOS Setup Utility. 2. Load default settings and exit the BIOS Setup Utility. If the problem persists, have the computer serviced.
110 (Incorrect password specified, system halted)	Turn off the computer; then turn it on again. Type in the correct password. You cannot access the computer without the correct password. If you forget your password, have the computer serviced.
252 (VPD checksum error)	Have the computer serviced.
The power-on password prompt	If the power-on password prompt appears, a power-on password is set. Type the correct password and press **Enter** to use the computer (see the Online User's Guide). If you still have a problem, have the computer serviced.
The hard disk password prompt	If the hard disk password prompt appears, a hard disk password is set. Type the correct password and press **Enter** to use the computer (see the Online User's Guide). **Attention:** If you forget your hard disk password, you can no longer access the hard disk. The password cannot be reset and you will lose all data and files on the hard disk. To use the computer, you will need to replace the hard disk. This replacement will incur expenses for parts and labor. If you still have a problem, have the computer serviced.

Problem	Cause and action
The setup password prompt	If the setup password prompt appears when you press **F1** to access the BIOS Utility, a setup password is set. Type the correct password and press **Enter** to use the computer (see the Online User's Guide). **Attention:** If you forget your setup password, you have to take your computer to an IBM reseller or IBM marketing representative to have the password reset. Proof or purchase is required, and an additional charge might be required for the service. If you still have a problem, have the computer serviced.
The DOS full-screen looks smaller. 640 x 480	When you use a DOS application that supports only the 640x480 resolution (VGA mode), the screen image might look slightly distorted or might appear smaller than the display size. This is to maintain compatibility with other DOS applications. This is not a defect. To expand the screen image to the same size as the actual screen, enter the BIOS Utility and enable the **Screen Expansion** parameter in the Startup Configuration menu. (The image might look slightly distorted.) See *Online User's Guide* for more details.
The Windows startup screen does not fill the screen.	When you enable **Screen Expansion** in the Startup Configuration menu of the BIOS Utility, the Windows startup screen expands but does not fill the entire screen. This is not a defect. (The image might look slightly distorted.) See *Online User's Guide* for more details.
Hibernation error	The system configuration changed between the time your computer entered hibernation mode and the time it left this mode, and your computer cannot resume normal operation. • Restore the system configuration to what it was before your computer entered hibernation mode. • If the memory size has been changed, re-create the hibernation file using the Sleep Manager program.
Operating system not found.	Verify the following: • The hard disk drive is correctly installed. • A startable diskette is in the external diskette drive. If you still see the same error message, check the boot sequence using the BIOS Setup Utility.

Errors without codes or messages

Problem	Cause and action
The screen is blank and you don't hear any beeps. **Note:** If you are not sure whether you hear any beeps, turn the computer off; then turn it on again, and listen again. Also check the volume control and the power indicator.	Make sure that: • The battery is installed correctly. • The ac adapter is connected to the computer and the power cord is plugged into a working electrical outlet. • The computer power is on. (Turn on the power switch again for confirmation.) If a power-on password is set but does not appear, the brightness and/or contrast controls might be set to minimum levels. Adjust the brightness by pressing **Fn+Home** or **Fn+End**. For HPA models, try adjusting the contrast by pressing **Fn+Insert** or **Fn+Delete** If the screen still remains blank, have the computer serviced.
The screen is blank and you hear a continuous beep, or two or more beeps.	If you are using Ethernet: • Make sure that the Ethernet cable is connected firmly. • Contact your network administrator. If the screen is still blank, and beeps are not stopped, have the computer serviced.
Only the cursor appears.	Reinstall the operating system, and turn on the computer. If you still see only the cursor on the screen, have the computer serviced.
The computer cannot boot-up. The message "Insert system diskette and press Enter key to reboot" appears.	Have in hand a bootable diskette, such as the Windows startup diskette, and do as follows: 1. Turn off the computer. 2. Connect the external diskette drive. 3. Insert the bootable diskette into the diskette drive. The Windows startup diskette can help diagnose the problem. If the problem remains, have the computer serviced.

Input problems

Problem	Cause and action
The cursor drifts when the computer is turned on or after it resumes normal operation.	The cursor might drift when you are not using the TrackPoint during normal operation. This is a normal characteristic of the TrackPoint and is not a defect. Cursor drifting might occur for several seconds under the following conditions: • When the computer is turned on. • When the computer resumes normal operation. • When the TrackPoint is pressed for a long time. • When the temperature changes.
The cursor does not work for a while after the settings in the Mouse Properties window have been changed.	This is a normal characteristic of the cursor. Wait several seconds until the cursor returns to the normal state.
The cursor does not move after the computer awakens from one of the power management modes.	Make sure you followed the instructions in the *Online User's Guide* correctly if you reinstalled Windows 98.
The mouse or pointing device does not work.	• Make sure that the pointing-device is enabled in the Device Manager. • Make sure that the mouse or pointing-device cable is securely connected to the computer. • Try using the TrackPoint. If the TrackPoint works, the error might be due to the mouse. **Note:** See the manual supplied with the mouse for more information.
The mouse buttons do not work.	Change the mouse driver to **Standard PS/2 Port Mouse**, and then reinstall the **IBM PS/2 TrackPoint** driver. See the *Online User's Guide* for instructions on how to install the driver.
The scrolling or Magnifying Glass function does not work.	See the General tab page in "Mouse Properties", and make sure that the PS/2 TrackPoint driver is loaded. **Note:** The TrackPoint functions work only with the TrackPoint.

Troubleshooting

Problem	Cause and action
Some or all keys on the keyboard do not work.	• If the problem occurred immediately after the computer returned from hibernation mode, enter the power-on password if it set. • If an external keyboard is connected, the numeric keypad on your computer will not work. This is not a defect. • If an external numeric keypad or a mouse is connected: 1. Turn off the computer. 2. Remove the external numeric keypad or the mouse. 3. Turn on the computer and try using the keyboard again. If the keyboard problem is solved, check the connection of the external numeric keypad, external keyboard, or mouse. If you still have a problem, have the computer serviced.
A number appears when you type a letter.	The numeric lock function is on. To disable it, press and hold **Shift**; then press **NumLk**.
All or some keys on the external numeric keypad do not work.	Make sure that the external numeric keypad is correctly connected to the computer.
All or some keys on the external keyboard do not work.	To use an external keyboard, you can attach it to the computer either directly or through the keyboard/mouse cable. Make sure that: • The keyboard cable is correctly connected to the computer (if the keyboard is connected directly to the computer). • The keyboard/mouse cable is correctly connected to the computer. • The keyboard cable is connected to the correct side of the keyboard/mouse cable. If these items are correct, disconnect the keyboard/mouse cable from the computer and make sure that the operation of the system keyboard is correct. If the system keyboard works, have the keyboard/mouse cable or the external keyboard serviced.
The internal numeric keypad does not work.	If you connect an external numeric keypad or an external keyboard with a numeric keypad, the internal numeric keypad is disabled. Use the external numeric keypad instead.
All or some of the Fn key functions do not work.	If Notebook Manager is active, the Fn key functions related to Display Device (**Fn+F7**, **Fn+Home**, **Fn+End**, **Fn+Insert**, and **Fn+Delete**) are disabled. **Note:** **Fn+Insert** and **Fn+Delete** are available only for HPA models.

Battery problems

Problem	Cause and action
The battery cannot be fully charged by the power-off method in the standard charge time for your computer.	The battery might be over-discharged. Do the following: 1. Turn off the computer. 2. Make sure that the over-discharged battery is in the computer. 3. Connect the ac adapter to the computer and let it charge. If the battery cannot be fully charged in 24 hours, use a new battery.
Your computer shuts down before the battery status indicator shows empty. ***-or-*** Your computer operates after the battery status indicator shows empty.	Discharge and recharge the battery. You can use the Battery Refresh function in the Notebook Manager program.
The operating time for a fully charged battery is short.	Discharge and recharge the battery. You can use the Battery Refresh function in the Notebook Manager program. If your battery operating time is still short, use a new battery.
The computer does not operate with a fully charged battery.	The over-current protective function in the battery might be activated. Turn off the computer and wait for several hours before you turn it back on again.
The battery cannot be charged.	You cannot charge the battery when it is too hot. If the battery feels hot, remove it from the computer and allow it to cool to room temperature. After it cools, reinstall it and recharge the battery. If it still cannot be charged, have it serviced.

Standby or hibernation problems

Problem	Cause and action
The computer enters standby mode immediately after POST (the standby indicator is on).	Make sure that: • The battery is charged. • The ac adapter is connected to the computer. • The operating temperature is within the acceptable range. Refer to “Features” on page 2. If these items are correct, have the computer serviced.
A message "critical low-battery error" appears, and the computer immediately turns off.	The battery power is getting low. Connect the ac adapter to the computer, or replace the battery with a fully charged one.
When you take action to return from standby mode, the computer display remains blank.	Check if an external monitor was connected before the computer entered standby mode. **Do not disconnect the external monitor while the computer is in hibernation mode. If no external monitor is attached when the computer resumes, the LCD remains blank and output is not displayed. This restriction does not depend on the resolution value.**
The computer does not return from standby mode, or the standby indicator stays on and the computer does not work.	The computer automatically enters standby or hibernation mode when the battery power is exhausted. Do one of the following: 1. Connect the ac adapter to the computer. 2. Replace the battery with a fully charged one; then press Fn.
Your computer does not enter standby or hibernation mode.	Check if the standby or hibernation options are set in the Power Management Properties window (**Fn+F2**). Make sure the hibernation file is created. (See *Online User's Guide* for more details.) **Note:** If a communication program is running, you cannot enter hibernation mode. To enter hibernation mode, stop the communication program, and then remove the PC Card or turn off power to the PC Card slot using the **Control Panel**.

Problem	Cause and action
The computer does not enter standby mode as set by the timer under Windows 98.	**For Windows 98:** The generic CD-ROM or DVD-ROM driver for Windows 98 accesses the internal CD-ROM or DVD-ROM drive every 3 seconds to see whether a CD-ROM is inserted there. This prevents your computer from entering standby mode even after a timeout. To enable the computer to enter standby mode, do the following: 1. Click **Start**. 2. Move the cursor to **Settings** and **Control Panel**. 3. Click **Control Panel**, and then double-click **System**. 4. Click the **Device Manager** tab. 5. Click the **+** mark of **CD-ROM**. 6. Double-click the name of the CD-ROM or DVD-ROM. 7. Click the **Settings** tab. 8. Clear the **Auto insert notification** check box. Windows 98 no longer detects the insertion of a CD-ROM or DVD-ROM automatically.
When creating a hibernation file, Sleep Manager gives off a "Not Enough Space for Allocation" message.	Sleep Manager needs enough, contiguous hard disk drive space to create and manage the hibernation file. Make sure the hard disk drive space is sufficient for Sleep Manager's requirements. This can be viewed from the Sleep Manager main screen. If there are still problems, there might not be enough contiguous free space to create the hibernation file. Use a disk defragementation utility to solve the problem. **Note:** Sleep Manager is available only in Windows 98.

Power switch problem

Problem	Cause and action
The system freezes, and you cannot turn off the computer.	Turn off the computer by pressing and holding the power switch for 4 seconds or more. If the system is still not reset, remove the ac adapter and the battery.

Hard-disk drive problems

Problem	Cause and action
The hard disk drive makes a rattling noise intermittently.	The rattling noise might be heard when: • The hard disk drive starts accessing the data or when it stops. • You are carrying the hard disk drive. • You are carrying the computer. This is a normal characteristic of a hard disk drive and is not a defect.
The hard disk drive does not work.	Have the hard disk drive serviced.

CD-ROM or DVD-ROM Problems

Problem	Cause and action
The CD or DVD does not work.	Make sure that: • Make sure that the computer power is turned on and a CD is properly loaded on the center pivot of the CD-ROM or DVD-ROM drive. (You should hear a click.) • Make sure that the CD-ROM or DVD-ROM tray is firmly closed. • Make sure that the device drivers are correctly installed.
You hear a noise from the CD-ROM or DVD-ROM drive when the disc is spinning.	The CD-ROM or DVD-ROM drive cover might be bent. Have the computer serviced.
The CD-ROM or DVD-ROM tray does not open even if you press the CD-ROM or DVD-ROM drive eject button.	Insert a pin into the CD-ROM or DVD-ROM emergency eject hole and eject the CD-ROM or DVD-ROM tray.
The CD cannot be read.	Make sure that: • The CD is not dirty. If it is, clean it with a CD-ROM or DVD-ROM cleaner kit. • The CDis not defective. If it is, try another CD. • The CD is placed in the tray with the label side up. • The CD format conforms with one of the following: – Music CD – CD-ROM or CD-ROM XA – Multisession photo CD – Video CD – DVD-ROM (DVD-video) **Note:** You can only playback DVD movies if your computer has a built-in DVD-ROM drive and the DVD movie playback software is installed.

Problem	Cause and action
The DVD movie cannot be played.	The region code of the DVD movie you inserted into the DVD-ROM drive must match the region code you set for the DVD Player software. You can set the region code a maximum of 5 times. If you have not reached the limit, a prompt appears and you change it to the region code of the inserted DVD movie. If not, you will only be able to play DVD movies of the last region you set.
The control buttons on the DVD movie playback software do not work.	The DVD movie playback software is reading the DVD. Wait for a few seconds before trying the buttons again.

Computer display problems

Problem	Cause and action
The screen is blank.	Press **Fn+Home** key to make the screen brighter. If you still have the problem, do the "Cause and action" in the problems below.
The screen is unreadable or distorted.	Make sure that: • The display device driver is installed correctly: 1. Click **Start** and move the cursor to **Settings**; then click **Control Panel**. 2. Double-click **Display**. 3. Select the **Settings** tab in the "Display Properties" window. 4. Click **Advanced...**; then click the **Adapter** tab. Make sure that the display driver information is correct. • The display resolution and color depth are correctly set. • The monitor type is correct.
Incorrect characters appear on the screen.	Did you install the operating system or application program with the correct procedure? If they are installed and configured correctly, have the computer serviced.
The screen stays on even after you power off the computer.	Push and hold the power switch for about five seconds; then release it to turn off your computer. Turn it on again.
Missing, discolored, or bright dots appear on the screen everytime you power on your computer (TFT model.)	This is a characteristic of TFT technology. Your computer display contains multiple thin-film transistors (TFTs). A small number of missing, discolored, or bright dots on the screen might exist all the time.
"Unable to create overlay window" message appears when you start DVD playback. —or— You may get poor playback or none at all while running video playback, DVD playback or game applications.	Do either of the following: • If you are using the computer display and external monitor simultaneously with 32–bit color mode, change the color depth to 16–bit mode. • If you are using a desktop size of 1280x1024 or larger, reduce the desktop size and the color depth.

Software problems

Problem	Cause and action
An application does not run correctly.	Check the following to make sure that the problem is not being caused by the application: • Your computer has the minimum required memory to run the application. Refer to the manuals supplied with the application. • The application is designed to operate with the Windows operating system. • Other applications run correctly on your computer. • The necessary device drivers are installed. See the *Online User's Guide*. • The application works OK when it is run on some other computer. If an error message appears when you are using the application program, refer to the manuals supplied with the application.If these items are correct and you still have a problem, contact your place of purchase or the service representative for help.
The Windows Safe Mode screen appears.	Your computer may not have shutdown properly the last time. In Safe Mode, shutdown and restart your computer. If you still have a problem, contact your place of purchase or the service representative for help.

Other problems

Problem	Cause and action
The computer locks or does not accept any input.	Your computer might lock when it enters standby mode during a communication operation. Disable the standby timer when you are working on the network. To turn off the computer, press and hold the power switch for 4 seconds or more.
The computer does not turn off with the power switch.	If the standby indicator is on and you are working under battery power, replace the battery with a fully charged one or change your power source to ac power. If you still have a problem, press and hold the power switch for 4 seconds or more; this forces the computer to turn off.
The computer does not start from a diskette.	Make sure that the startup sequence in the BIOS Utility is set so that the computer starts up from the diskette drive (see *Online User's Guide* for more details).

Testing your computer

If you have a problem with your computer, you can test it by using PC-Doctor. To run PC-Doctor, do as follows:

1. Click **Start**.
2. Move the cursor to **Programs** and then to **PC-Doctor for Window**s.
3. Click **PC-Doctor for Windows**.
4. Choose either the Quick Test or the standard test.

Attention

Running the Quick Test set can take 10 minutes or longer. Make sure you have time to run the entire test; do not interrupt the test while it is running.

The Quick Test runs many tests of critical hardware components, but it does not run all of the diagnostic tests in PC-Doctor. If PC-Doctor reports that all of the tests in the Quick Test set have been run and that it has found no problems, consider running additional tests in PC-Doctor.

If you are preparing to contact IBM for support, be sure to print the test log so that you can rapidly provide information to the help technician.

Backing up your system

Backing up your system configuration

When you add software applications or devices to your computer, the installation process can change the computer registry and configuration.

If your computer does not work properly after you add applications or devices, you need to restore the previous configuration.

You can use ConfigSafe (for Windows 98 and Windows 2000) or System Restore (for Windows Millenium Edition) to save the configuration before you make changes. Then if something goes wrong, use ConfigSafe or System Restore to restore the system registry and configuration files.

For Windows 98 or Windows 2000:

To capture a snapshot of your system configuration with ConfigSafe:

1. Click **Start**.
2. Move the cursor to **Programs**, **ConfigSafe**, and then **ConfigSafe**.
3. Double-click **ConfigSafe**.
4. Click the **camera** icon.
5. Type a name for the snapshot. For example, before installing a word processor, you might type, "Before installing word processor."
6. Click **OK**.
7. After a few moments, the main ConfigSafe window will return. The snapshot is complete.

If you need to restore a configuration snapshot, open ConfigSafe and follow the on-screen instructions.

For Windows Millenium Edition:

To capture a snapshot of your system configuration, or to restore your configuration to an earlier snapshot using Windows Me, click **Start** —> **Programs** —> **Accessories** —> **System Tools** —> **System Restore** and follow the on-screen instructions.

Backing up your data

Hard disks are reliable data storage devices. Even so, it is wise to protect yourself against accidental data loss or the unlikely event of a hard-disk malfunction by backing up your important files regularly.

For Windows 98 or Windows 2000:

To back up data, start the backup application as follows:

1. Click **Start**.
2. Move the cursor to **Programs**, **Accessories**, **System Tools**, and **Backup**.
3. Click **Backup**.

Make sure that the **Create a new backup job** button is marked in the Microsoft Backup window.

Click **OK**. The Backup Wizard will guide you through backing up some or all of the files on your hard disk.

For Windows Millenium Edition:

To back up data using Windows Me, copy your files to a diskette drive or another storage device on a regular basis.

Recovering lost or damaged software

Recovering pre-installed software

You have the ability to restore the software that was shipped with your computer, if your hard disk drive data is damaged or accidentally erased. This software includes your pre-installed operating system, applications and device drivers.

Depending on the model of your ThinkPad® computer, you can restore your pre-installed software using either a Recovery CD or the Product Recovery program.

If a Recovery CD was not provided with your computer, your computer will contain the Product Recovery program. This tool is located in a section of your hard disk drive that is not displayed when using Windows Explorer.

Note: The recovery process might take up to 2 hours.

Attention

All files on the C:\ drive will be lost in the recovery process. Be sure to back up copies of the files you have saved on your C:\ drive before you begin.

To use the Product Recovery program to restore your pre-installed software, do the following:

1. Save all your files and shut down your desktop.
2. Turn off your computer.
3. Turn on your computer. Quickly press **F11** when this message displays on the screen: "To start the Product Recovery program, press F11". This message displays only for a few seconds.

   Note: If this message does not display, you can use a Recovery Repair diskette to access the Product Recovery program.
4. Select the operating system to recover from the list displayed on the screen.
5. Select the recovery options you want and follow the instructions on the screen.
6. Restart the system by pressing Ctrl+Alt+Del or by turning the computer off and then on again. Your computer will restart with the pre-installed operating system, drivers, and software.

To use a Recovery CD to restore your pre-installed software, do the following:

1. Save all your files and shut down your desktop.
2. Turn off your computer.

3. Turn on your computer, and insert the Recovery CD into the CD-ROM or DVD-ROM drive; then wait for the Product Recovery program menu to display on your screen.
4. Select the operating system to recover from the list displayed on the screen.
5. Select the recovery options you want and follow the instructions on the screen.
6. Restart the system by pressing Ctrl+Alt+Del or by turning the computer off and then on again. Your computer will restart with the pre-installed operating system, drivers, and software.

Creating and using a Recovery Repair diskette

The Recovery Repair diskette is used to recover the prompt that is needed to access the Product Recovery program, in the event that the prompt does not appear. Make a Recovery Repair diskette and save it for future use. To make a Recovery Repair diskette:

1. Shut down and restart your computer.
2. Press **F11** at the prompt. (The option to press F11 appears only for a few seconds. You must press F11 quickly.) The Product Recovery program main menu will appear.
3. If you are using Windows 2000 Professional, you will be prompted to select the appropriate operating system setting. This menu does not appear for Windows 98 SE.
4. Select **System Utilities** from the main menu. Press **Enter**.
5. Select **Create a Recovery Repair diskette**. Press **Enter**.
6. Follow the on-screen instructions.
7. When the process is completed, label your diskette as the Recovery Repair diskette and save it for future use.

To use the Recovery Repair diskette:

1. Shut down and turn off your computer.
2. Attach the external diskette drive to the computer.
3. Insert the Recovery Repair diskette into the drive, then turn on the computer.

4. Follow the on-screen instructions.

Using the ThinkPad Software Selections CD

The Software Selections CD contains software applications and device drivers for your computer. You can customize your computer with this CD.

If you need to reinstall software, or install a driver for a hardware device, put the Software Selections CD in your CD-ROM or DVD-ROM drive. The Features menu appears automatically.

The Software Selections CD offers the following functions:

- **Welcome**

  This page displays the model and serial number of your computer, and a menu from which you can select an item by clicking it.

- **Install Software**

  Use this page for:

  – Reinstalling a software application

  – Installing a hardware device driver

  – Installing software that was not preinstalled on your computer.

- **Uninstall Software**

  You can uninstall application programs or device drivers that were installed from the Software Selections CD and that have an uninstall entry in the **Add/Remove Program** list.

- **Advanced Functions**

  – Change Settings

    You can select options such as where to access the Software Selections CD and how to display information about software.

  – Install Device Drivers

    Go to this page to view a list of the device drivers on the system and install the ones you want. The page might also

contain a readme file for the driver you are installing; if so, be sure to read it before starting installation.

– Create a Diskette Image

  Some applications or devices require a diskette for installation. With this function, you create a diskette image.

– Create a Software Selections CD image

  You can copy the entire Software Selections CD and program onto your hard disk, and then install software and drivers without the CD.

– Read the License Agreement

  This page presents the license agreements for the software programs on the Software Selections CD.

– Help

  This page introduces the Software Selections CD and explains each item.

Getting service

With the original purchase of an IBM hardware product, you have access to extensive support under warranty. Be sure to retain your proof of purchase to obtain warranty service.

For hardware product assistance covered under the terms of the IBM Statement of Limited Warranty, you may call the IBM Personal Computer HelpCenter (1-800-772-2227 in the U.S.)

The following services are available during the warranty period:

- **Problem determination:** Trained personnel are available to assist you in determining whether you have a hardware problem and deciding what action is necessary to fix the problem.
- **IBM hardware repair:** If the problem is determined to be caused by IBM hardware under warranty, trained service personnel are available to provide service.
- **Engineering change management:** Occasionally, changes may be required after a product has been sold. IBM or, if authorized by IBM, your reseller will make Engineering Changes (ECs) available that apply to your hardware.

To prepare for your call, fill in the blanks of the recording sheets (refer to “Recording sheets” on page 41) with information about your computer. If possible, be at your computer when you call.

The following items are not covered:

- Replacement or use of non-IBM parts or nonwarranted IBM parts
- Configuration of BIOS as part of an installation to device drivers
- Installation and maintenance of network operating systems (NOS)
- Installation and maintenance of application programs

ThinkPad Web site

On the World Wide Web, the IBM Personal Computing Web site has up-to-date information about IBM products and support:

http://www.ibm.com/pc

You can find support information for your IBM products, including supported options, on the IBM Personal Computing Support page:

http://www.ibm.com/pc/support

If you click **profile** on the support page, you can create a customized support page that is specific to your hardware, complete with Frequently Asked Questions, Parts Information, Technical Hints and Tips, and Downloadable Files.

You will have the information you need, all in one place.

In addition, you can choose to receive e-mail notifications whenever new information about your registered products becomes available.

You can also go directly to the ThinkPad page:

http://www.ibm.com/thinkpad

IBM might make improvements or changes to this Web site at any time without any notice.

Recording sheets

Option List

☐ DIMM _____MB	☐ PC Card _____
☐ Hard disk drive _____GB	☐ Battery
☐ External diskette drive	☐ Other _____

Identification numbers

The serial number label is on the bottom of your computer. Write the machine **Type** and serial number (**S/N**) below:

IBM product name	ThinkPad i Series 1200/1300
Machine type	1161-/1171-_____
Serial number	_____

Problem recording sheet

Collect this needed information before you call for help. Then you will be able to get help as quickly as possible.

- Type of problem:

□ Continuous problem □ Intermittent problem

- Error code:

  _____

- The operating system and its version number, if available:

  □ Windows Version_____

- Application programs running at the time of the problem:

  _____

  _____

- Problem symptom:

  Describe the problem more specifically:

  _____

  _____

  _____

- Can the problem be reproduced?

  □ Yes □ No

  If yes, describe how it can be reproduced:

  _____

  _____

Appendix A. Product warranty and notices

International Business Machines Corporation — Armonk, New York 10504

Statement of Warranty Part 1 - General Terms

This Statement of Warranty includes Part 1 - General Terms and Part 2 - Country-unique Terms. ***The terms of Part 2 may replace or modify those of Part 1.*** *The warranties provided by IBM in this Statement of Warranty apply only to Machines you purchase for your use, and not for resale, from IBM or your reseller. The term "Machine" means an IBM machine, its features, conversions, upgrades, elements, or accessories, or any combination of them. The term "Machine" does not include any software programs, whether pre-loaded with the Machine, installed subsequently or otherwise. Unless IBM specifies otherwise, the following warranties apply only in the country where you acquire the Machine. Nothing in this Statement of Warranty affects any statutory rights of consumers that cannot be waived or limited by contract. If you have any questions, contact IBM or your reseller.*

Machine - IBM ThinkPad i Series 1200/1300 and the Battery
Warranty Period* - One Year
**Elements and accessories are warranted for three months. Contact your place of purchase for warranty service information. Some IBM Machines are eligible for On-site warranty service depending on the country where service is performed.*

The IBM Warranty for Machines

IBM warrants that each Machine 1) is free from defects in materials and workmanship and 2) conforms to IBM's Official Published Specifications. The warranty period for a Machine is a specified, fixed period commencing on its Date of Installation. The date on your sales receipt is the Date of Installation, unless IBM or your reseller informs you otherwise.

© Copyright IBM Corporation 2000

During the warranty period IBM or your reseller, if approved by IBM to provide warranty service, will provide repair and exchange service for the Machine, without charge, under the type of service designated for the Machine and will manage and install engineering changes that apply to the Machine.

If a Machine does not function as warranted during the warranty period, and IBM or your reseller are unable to either 1) make it do so or 2) replace it with one that is at least functionally equivalent, you may return it to your place of purchase and your money will be refunded. The replacement may not be new, but will be in good working order.

Extent of Warranty

The warranty does not cover the repair or exchange of a Machine resulting from misuse, accident, modification, unsuitable physical or operating environment, improper maintenance by you, or failure caused by a product for which IBM is not responsible. The warranty is voided by removal or alteration of Machine or parts identification labels.

THESE WARRANTIES ARE YOUR EXCLUSIVE WARRANTIES AND REPLACE ALL OTHER WARRANTIES OR CONDITIONS, EXPRESS OR IMPLIED, INCLUDING, BUT NOT LIMITED TO, THE IMPLIED WARRANTIES OR CONDITIONS OF MERCHANTABILITY AND FITNESS FOR A PARTICULAR PURPOSE. THESE WARRANTIES GIVE YOU SPECIFIC LEGAL RIGHTS AND YOU MAY ALSO HAVE OTHER RIGHTS WHICH VARY FROM JURISDICTION TO JURISDICTION. SOME JURISDICTIONS DO NOT ALLOW THE EXCLUSION OR LIMITATION OF EXPRESS OR IMPLIED WARRANTIES, SO THE ABOVE EXCLUSION OR LIMITATION MAY NOT APPLY TO YOU. IN THAT EVENT, SUCH WARRANTIES ARE LIMITED IN DURATION TO THE WARRANTY PERIOD. NO WARRANTIES APPLY AFTER THAT PERIOD.

Items Not Covered by Warranty

IBM does not warrant uninterrupted or error-free operation of a Machine.

Unless specified otherwise, IBM provides non-IBM machines **WITHOUT WARRANTIES OF ANY KIND**.

Any technical or other support provided for a Machine under warranty, such as assistance via telephone with "how-to" questions and those regarding Machine set-up and installation, will be provided **WITHOUT WARRANTIES OF ANY KIND**.

Warranty Service

To obtain warranty service for the Machine, contact your reseller or IBM. You may be required to present proof of purchase.

IBM or your reseller provides certain types of repair and exchange service, either at your location or at a service center, to keep Machines in, or restore them to, conformance with their Specifications. IBM or your reseller will inform you of the available types of service for a Machine based on its country of installation. IBM may repair the failing Machine or exchange it at its discretion.

When warranty service involves the exchange of a Machine or part, the item IBM or your reseller replaces becomes its property and the replacement becomes yours. You represent that all removed items are genuine and unaltered. The replacement may not be new, but will be in good working order and at least functionally equivalent to the item replaced. The replacement assumes the warranty service status of the replaced item.

Any feature, conversion, or upgrade IBM or your reseller services must be installed on a Machine which is 1) for certain Machines, the designated, serial-numbered Machine and 2) at an engineering-change level compatible with the feature, conversion, or upgrade. Many features, conversions, or upgrades involve the removal of parts and their return to IBM. A part that replaces a removed part will assume the warranty service status of the removed part.

Before IBM or your reseller exchanges a Machine or part, you agree to remove all features, parts, options, alterations, and attachments not under warranty service.

You also agree to

1. ensure that the Machine is free of any legal obligations or restrictions that prevent its exchange;
2. obtain authorization from the owner to have IBM or your reseller service a Machine that you do not own; and
3. where applicable, before service is provided
   a. follow the problem determination, problem analysis, and service request procedures that IBM or your reseller provides,
   b. secure all programs, data, and funds contained in a Machine,
   c. provide IBM or your reseller with sufficient, free, and safe access to your facilities to permit them to fulfill their obligations, and
   d. inform IBM or your reseller of changes in a Machine's location.

IBM is responsible for loss of, or damage to, your Machine while it is 1) in IBM's possession or 2) in transit in those cases where IBM is responsible for the transportation charges.

Neither IBM nor your reseller is responsible for any of your confidential, proprietary or personal information contained in a Machine which you return to IBM or your reseller for any reason. You should remove all such information from the Machine prior to its return.

Production Status

Each IBM Machine is manufactured from new parts, or new and used parts. In some cases, the Machine may not be new and may have been previously installed. Regardless of the Machine's production status, IBM's appropriate warranty terms apply.

Limitation of Liability

Circumstances may arise where, because of a default on IBM's part or other liability, you are entitled to recover damages from IBM. In each such instance, regardless of the basis on which you are entitled to claim damages from IBM (including fundamental breach, negligence, misrepresentation, or other contract or tort claim), IBM is liable for no more than

1. damages for bodily injury (including death) and damage to real property and tangible personal property; and
2. the amount of any other actual direct damages, up to the greater of U.S. $100,000 (or equivalent in local currency) or the charges (if recurring, 12 months' charges apply) for the Machine that is the subject of the claim.

   This limit also applies to IBM's suppliers and your reseller. It is the maximum for which IBM, its suppliers, and your reseller are collectively responsible.

UNDER NO CIRCUMSTANCES IS IBM LIABLE FOR ANY OF THE FOLLOWING: 1) THIRD-PARTY CLAIMS AGAINST YOU FOR DAMAGES (OTHER THAN THOSE UNDER THE FIRST ITEM LISTED ABOVE); 2) LOSS OF, OR DAMAGE TO, YOUR RECORDS OR DATA; OR 3) SPECIAL, INCIDENTAL, OR INDIRECT DAMAGES OR FOR ANY ECONOMIC CONSEQUENTIAL DAMAGES (INCLUDING LOST PROFITS OR SAVINGS), EVEN IF IBM, ITS SUPPLIERS OR YOUR RESELLER IS INFORMED OF THEIR POSSIBILITY. SOME JURISDICTIONS DO NOT ALLOW THE EXCLUSION OR LIMITATION OF INCIDENTAL OR CONSEQUENTIAL DAMAGES, SO THE ABOVE LIMITATION OR EXCLUSION MAY NOT APPLY TO YOU.

Statement of Warranty Part 2 - Country-unique Terms

ASIA PACIFIC

AUSTRALIA: The IBM Warranty for Machines: The following paragraph is added to this Section:

The warranties specified in this Section are in addition to any rights you may have under the Trade Practices Act 1974 or other legislation and are only limited to the extent permitted by the applicable legislation.

Extent of Warranty: The following replaces the first and second sentences of this Section:

The warranty does not cover the repair or exchange of a Machine resulting from misuse, accident, modification, unsuitable physical or operating environment, operation in other than the Specified Oper-

ating Environment, improper maintenance by you, or failure caused by a product for which IBM is not responsible.

Limitation of Liability: The following is added to this Section:

Where IBM is in breach of a condition or warranty implied by the Trade Practices Act 1974, IBM's liability is limited to the repair or replacement of the goods or the supply of equivalent goods. Where that condition or warranty relates to right to sell, quiet possession or clear title, or the goods are of a kind ordinarily acquired for personal, domestic or household use or consumption, then none of the limitations in this paragraph apply.

PEOPLE'S REPUBLIC OF CHINA: Governing Law: The following is added to this Statement:

The laws of the State of New York govern this Statement.

INDIA: Limitation of Liability: The following replaces items 1 and 2 of this Section:

1. liability for bodily injury (including death) or damage to real property and tangible personal property will be limited to that caused by IBM's negligence;

2. as to any other actual damage arising in any situation involving nonperformance by IBM pursuant to, or in any way related to the subject of this Statement of Warranty, IBM's liability will be limited to the charge paid by you for the individual Machine that is the subject of the claim.

NEW ZEALAND: The IBM Warranty for Machines: The following paragraph is added to this Section:

The warranties specified in this Section are in addition to any rights you may have under the Consumer Guarantees Act 1993 or other legislation which cannot be excluded or limited. The Consumer Guarantees Act 1993 will not apply in respect of any goods which IBM provides, if you require the goods for the purposes of a business as defined in that Act.

Limitation of Liability: The following is added to this Section:

Where Machines are not acquired for the purposes of a business as defined in the Consumer Guarantees Act 1993, the limitations in this Section are subject to the limitations in that Act.

EUROPE, MIDDLE EAST, AFRICA (EMEA)

The following terms apply to all EMEA countries.

The terms of this Statement of Warranty apply to Machines purchased from an IBM reseller. If you purchased this Machine from IBM, the terms and conditions of the applicable IBM agreement prevail over this warranty statement.

Warranty Service

If you purchased an IBM Machine in Austria, Belgium, Denmark, Estonia, Finland, France, Germany, Greece, Iceland, Ireland, Italy, Latvia, Lithuania, Luxembourg, Netherlands, Norway, Portugal, Spain, Sweden, Switzerland or United Kingdom, you may obtain warranty service for that Machine in any of those countries from either (1) an IBM reseller approved to perform warranty service or (2) from IBM.

If you purchased an IBM Personal Computer Machine in Albania, Armenia, Belarus, Bosnia and Herzegovina, Bulgaria, Croatia, Czech Republic, Georgia, Hungary, Kazakhstan, Kirghizia, Federal Republic of Yugoslavia, Former Yugoslav Republic of Macedonia (FYROM), Moldova, Poland, Romania, Russia, Slovak Republic, Slovenia, or Ukraine, you may obtain warranty service for that Machine in any of those countries from either (1) an IBM reseller approved to perform warranty service or (2) from IBM.

The applicable laws, Country-unique terms and competent court for this Statement are those of the country in which the warranty service is being provided. However, the laws of Austria govern this Statement if the warranty service is provided in Albania, Armenia, Belarus, Bosnia and Herzegovina, Bulgaria, Croatia, Czech Republic, Federal Republic of Yugoslavia, Georgia, Hungary, Kazakhstan, Kirghizia, Former Yugoslav Republic of Macedonia (FYROM), Moldova, Poland, Romania, Russia, Slovak Republic, Slovenia, and Ukraine.

The following terms apply to the country specified:

EGYPT: Limitation of Liability: The following replaces item 2 in this Section:

2. as to any other actual direct damages, IBM's liability will be limited to the total amount you paid for the Machine that is the subject of the claim.

Applicability of suppliers and resellers (unchanged).

FRANCE: Limitation of Liability: The following replaces the second sentence of the first paragraph of this Section:

In such instances, regardless of the basis on which you are entitled to claim damages from IBM, IBM is liable for no more than: (items 1 and 2 unchanged).

GERMANY: The IBM Warranty for Machines: The following replaces the first sentence of the first paragraph of this Section:

The warranty for an IBM Machine covers the functionality of the Machine for its normal use and the Machine's conformity to its Specifications.

The following paragraphs are added to this Section:

The minimum warranty period for Machines is six months.

In case IBM or your reseller are unable to repair an IBM Machine, you can alternatively ask for a partial refund as far as justified by the reduced value of the unrepaired Machine or ask for a cancellation of the respective agreement for such Machine and get your money refunded.

Extent of Warranty: The second paragraph does not apply.

Warranty Service: The following is added to this Section:

During the warranty period, transportation for delivery of the failing Machine to IBM will be at IBM's expense.

Production Status: The following paragraph replaces this Section:

Each Machine is newly manufactured. It may incorporate in addition to new parts, re-used parts as well.

Limitation of Liability: The following is added to this Section:

The limitations and exclusions specified in the Statement of Warranty will not apply to damages caused by IBM with fraud or gross negligence and for express warranty.

In item 2, replace "U.S. $100,000" with "1.000.000 DEM."

The following sentence is added to the end of the first paragraph of item 2:

IBM's liability under this item is limited to the violation of essential contractual terms in cases of ordinary negligence.

IRELAND: Extent of Warranty: The following is added to this Section:

Except as expressly provided in these terms and conditions, all statutory conditions, including all warranties implied, but without prejudice to the generality of the foregoing all warranties implied by the Sale of Goods Act 1893 or the Sale of Goods and Supply of Services Act 1980 are hereby excluded.

Limitation of Liability: The following replaces items one and two of the first paragraph of this Section:

1. death or personal injury or physical damage to your real property solely caused by IBM's negligence; and 2. the amount of any other actual direct damages, up to the greater of Irish Pounds 75,000 or 125 percent of the charges (if recurring, the 12 months' charges apply) for the Machine that is the subject of the claim or which otherwise gives rise to the claim.

Applicability of suppliers and resellers (unchanged).

The following paragraph is added at the end of this Section:

IBM's entire liability and your sole remedy, whether in contract or in tort, in respect of any default shall be limited to damages.

ITALY: Limitation of Liability: The following replaces the second sentence in the first paragraph:

In each such instance unless otherwise provided by mandatory law, IBM is liable for no more than: (item 1 unchanged) 2)as to any other actual damage arising in all situations involving non-performance by IBM pursuant to, or in any way related to the subject matter of this Statement of Warranty, IBM's liability, will be limited to the total amount you paid for the Machine that is the subject of the claim.

Applicability of suppliers and resellers (unchanged).

The following replaces the second paragraph of this Section: Unless otherwise provided by mandatory law, IBM and your reseller are not liable for any of the following: (items 1 and 2 unchanged) 3) indirect damages, even if IBM or your reseller is informed of their possibility.

SOUTH AFRICA, NAMIBIA, BOTSWANA, LESOTHO AND SWAZILAND: Limitation of Liability: The following is added to this Section:

IBM's entire liability to you for actual damages arising in all situations involving nonperformance by IBM in respect of the subject matter of this Statement of Warranty will be limited to the charge paid by you for the individual Machine that is the subject of your claim from IBM.

TURKIYE: Production Status: The following replaces this Section:

IBM fulfills customer orders for IBM Machines as newly manufactured in accordance with IBM's production standards.

UNITED KINGDOM: Limitation of Liability: The following replaces items 1 and 2 of the first paragraph of this Section:

1. death or personal injury or physical damage to your real property solely caused by IBM's negligence;

2. the amount of any other actual direct damages or loss, up to the greater of Pounds Sterling 150,000 or 125 percent of the charges (if recurring, the 12 months' charges apply) for the Machine that is the subject of the claim or which otherwise gives rise to the claim.

The following item is added to this paragraph:

3. breach of IBM's obligations implied by Section 12 of the Sale of Goods Act 1979 or Section 2 of the Supply of Goods and Services Act 1982.

Applicability of suppliers and resellers (unchanged).

The following is added to the end of this Section:

IBM's entire liability and your sole remedy, whether in contract or in tort, in respect of any default will be limited to damages.

NORTH AMERICA

CANADA: Warranty Service: The following is added to this Section:

To obtain warranty service from IBM, call 1-800-465-6666.

UNITED STATES OF AMERICA: Warranty Service: The following is added to this Section:

To obtain warranty service from IBM, call 1-800-IBM-SERV.

Notices

References in this publication to IBM products, programs, or services do not imply that IBM intends to make these available in all countries in which IBM operates. Any reference to an IBM product, program, or service is not intended to state or imply that only IBM's product, program, or service may be used. Any functionally equivalent product, program, or service that does not infringe any of IBM's intellectual property rights may be used instead of the IBM product, program, or service. Evaluation and verification of operation in conjunction with other products, except those expressly designated by IBM, are the user's responsibility.

IBM may have patents or pending patent applications covering subject matter in this document. The furnishing of this document does not give you any license to these patents. You can send license inquiries, in writing, to the IBM Director of Licensing, IBM Corporation, North Castle Drive, Armonk, NY 10504–1784, U.S.A.

Year 2000 readiness and instructions

This is a Year 2000 Readiness Disclosure.

A product is Year 2000 Ready if the product, when used in accordance with its associated documentation, is capable of correctly processing, providing and/or receiving date data within and between the 20th and 21st centuries, provided all other products (for example, software, hardware, and firmware) used with the product properly exchange date data with it.

This IBM PC hardware product has been designed to process four-digit date information correctly within and between the 20th and 21st centuries. If your IBM computer is on when the century changes, you should turn it off and then back on again once, or restart the operating system, to ensure that the internal clock resets itself for the new century.

This IBM PC product cannot prevent errors that might occur if software you use or exchange data with is not ready for the Year 2000. IBM software that comes with this product is Year 2000 Ready. However, software from other companies might come with this IBM

PC product. IBM cannot take responsibility for the readiness of that software. You should contact the software developers directly if you wish to verify readiness, understand limitations, or look for any software updates.

To learn more about IBM PC products and the Year 2000, visit our Web site at http://www.pc.ibm.com/year2000. The information and tools there can help you with your Year 2000 transition plan, especially if you have multiple IBM PCs. IBM encourages you to check periodically for updated information.

Trademarks

The following terms, in this publication, are trademarks of the IBM Corporation in the United States or other countries or both:

IBM
PS/2
ThinkPad
TrackPoint IV

Microsoft, Windows, and the Windows flag logo are trademarks or registered trademarks of Microsoft Corporation.

Pentium®, Celeron™, and SpeedStep™ are trademarks or registered trademarks of Intel Corporation in the U.S. and other countries.

Other company, product, and service names, which may be denoted by a double asterisk (**), may be trademarks or service marks of others.

Electronic emission notices

Federal Communications Commission (FCC) statement

ThinkPad i Series 1200/1300, model number 1161, and 1171

This equipment has been tested and found to comply with the limits for a Class B digital device, pursuant to Part 15 of the FCC Rules. These limits are designed to provide reasonable protection against harmful interference in a residential installation. This equipment generates, uses, and can radiate radio frequency energy and, if not installed and used in accordance with the instructions, may cause

harmful interference to radio communications. However, there is no guarantee that interference will not occur in a particular installation. If this equipment does cause harmful interference to radio or television reception, which can be determined by turning the equipment off and on, the user is encouraged to try to correct the interference by one or more of the following measures:

- Reorient or relocate the receiving antenna.
- Increase the separation between the equipment and receiver.
- Connect the equipment into an outlet on a circuit different from that to which the receiver is connected.
- Consult an IBM authorized dealer or service representative for help.

Properly shielded and grounded cables and connectors must be used in order to meet FCC emission limits. Proper cables and connectors are available from IBM authorized dealers. IBM is not responsible for any radio or television interference caused by using other than recommended cables and connectors or by unauthorized changes or modifications to this equipment.

Unauthorized changes or modifications could void the user's authority to operate the equipment. This device complies with Part 15 of the FCC Rules. Operation is subject to the following two conditions: (1) this device may not cause harmful interference, and (2) this device must accept any interference received, including interference that may cause undesired operation.

Responsible party:

International Business Machines Corporation
New Orchard Road
Armonk, NY 10504
Telephone 1-919-543-2193

Tested To Comply
With FCC Standards
FOR HOME OR OFFICE USE

Industry Canada Class B Emission Compliance Statement

This Class B digital apparatus complies with Candian ICES-003.

Avis de conformité à la règlementation d'Industrie Canada

Cet appareil numérique de la classe B est conform à la norme NMB-003 du Canada.

European Community Directive conformance statement

This product is in conformity with the protection requirements of EC Council Directive 89/336/EEC on the approximation of the laws of the Member States relating to electromagnetic compatibility. IBM cannot accept responsibility for any failure to satisfy the protection requirements resulting from a non-recommended modification of the product, including the fitting of non-IBM option cards.

A declaration of Conformity with the requirements of the Directive has been signed by IBM United Kingdom Limited, PO BOX 30 Spango Valley Greenock Scotland PA160AH.

This product satisfies the Class B limits of EN 55022.

Telecommunication notice

Federal Communications Communication (FCC) and telephone company requirements

1. This device complies with Part 68 of the FCC rules. A label is affixed to the device that contains, among other things, the FCC registration number, USOC, and Ringer Equivalency Number (REN) for this equipment. If these numbers are requested, provide this information to your telephone company.

   Note: If the device is an internal modem, a second FCC registration label is also provided. You may attach the label to the exterior of the computer in which you install the IBM modem, or you may attach the label to the external DAA, if you have one. Place the label in a location that is easily accessible, should you need to provide the label information to the telephone company.

2. The REN is useful to determine the quantity of devices you may connect to your telephone line and still have those devices ring

when your number is called. In most, but not all areas, the sum of the RENs of all devices should not exceed five (5). To be certain of the number of devices you may connect to your line, as determined by the REN, you should call your local telephone company to determine the maximum REN for your calling area.

3. If the device causes harm to the telephone network, the telephone company may discontinue your service temporarily. If possible, they will notify you in advance; if advance notice is not practical, you will be notified as soon as possible. You will be advised of your right to file a complaint with the FCC.
4. Your telephone company may make changes in its facilities, equipment, operations, or procedures that could affect the proper operation of your equipment. If they do, you will be given advance notice to give you an opportunity to maintain uninterrupted service.
5. If you experience trouble with this product, contact your authorized reseller, or call IBM. In the United States, call IBM at **1-800-772-2227**. In Canada, call IBM at **1-800-565-3344**. You may be required to present proof of purchase. The telephone company may ask you to disconnect the device from the network until the problem has been corrected, or until you are sure the device is not malfunctioning.
6. No customer repairs are possible to the device. If you experience trouble with the device, contact your Authorized Reseller or see the Diagnostics section of this manual for information.
7. This device may not be used on coin service provided by the telephone company. Connection to party lines is subject to state tariffs. Contact your state public utility commission or corporation commission for information.
8. When ordering network interface (NI) service from the local Exchange Carrier, specify service arrangement USOC RJ11C.

Canadian Department of Communications certification label

NOTICE: The Industry Canada label identifies certified equipment. This certification means that the equipment meets certain telecommunications networks protective, operational, and safety requirement. The Department does not guarantee the equipment will operate to the user's satisfaction.

Before installing this equipment, users should ensure that it is permissible to be connected to the facilities of the local telecommunications company. The equipment must also be installed using an acceptable method of communication. In some cases, the company's inside wiring associated with a single line individual service may be extended by means of a certified connector assembly (telephone extension cord). The customer should be aware that compliance with the above conditions may not prevent degradation of service in some situations. Repairs to certified equipment should be made by an authorized Canadian maintenance facility designated by the supplier. Any repairs of alterations made by the user to this equipment, or equipment malfunctions, may give the telecommunications company cause to request the user to disconnect the equipment.

Users should ensure for their own protection that the electrical ground connections of the power utility, telephone lines and internal metallic water pipe system, if present, are connected together. This precaution may be particularly important in rural areas.

CAUTION:
Users should not attempt to make such connections themselves, but should contact the appropriate electric inspection authority, or electrician, as appropriate.

NOTICE: The **Ringer Equivalent Number** (REN) assigned to each terminal device provides an indication of the maximum number of terminals allowed to be connected to a telephone interface. The termination on an interface may consist of any combination of devices subject only to the requirement that the sum of the Ringer Equivalence Number of all the devices does not exceed 5.

Ètiquette d'homologation du ministère des Communications du Canada

AVIS : L'etiquette dus ministère l'Industrie Canada identifie le matériel homologué. Cette étiquette certifie que le matériel est conforme à certaines normes de protection, d'exploitation et de sécurité des réseaux de télécommunications. Le Ministère n'assure toutefois pas que le matériel fonctionnera à la satisfaction de l'utilisateur.

Avant d'installer ce matériel, l'utilisateur doit s'assurer qui'l est permis de le raccorder aux installations de l'entreprise locale de télécommunication. Le matériel doit également être installé en suivant une méthode acceptée de raccordement. Dans certains cas, les fils intérieurs de l'entreprise utilisés pour un service individuel à ligne unique peuvent être prolongés au moyen d'un dispositif homologué de raccordement (cordon prolongateur téléphonique interne). L'abonné ne doit pas oublier qu'il est possibile que la conformité aux conditions énoncées ci-dessus n'empechent pas la dégradation du service dans certaines situations. Actuellement, les entreprises de télécommunication ne permettent pas que l'on raccorde leur matériel à des jacks d'abonné, sauf dans les cas précis prévus par les tarifs paticuliers de ces entreprises.

Les réparations de matériel homologué doivent être effectuées par un centre d'entretien canadien autorisé désigné par le fournisseur. La compagnie de télécommunications peut demader à l'utilisateur de débrancher un appareil à la suite de réparations ou de modifications effectuées par l'utilisateur ou à cause de mauvais fonctionnement.

Pour sa propre protection, l'utilisateur doit s'assurer que tous les fils de mise à la terre de la source d'énergie électrique, des lignes téléphoniques et des canalisations d'eau métalliques, s'il y en a, sont raccordés ensemble. Cette précaution est particulièrement importante dans les régions rurales.

Avertissement : L'utilisateur ne doit pas tenter de faire ces raccordements lui-même; il doit avoir recours à un service d'inspection des installations électriques, ou à électricien, selon le cas.

AVIS : L'indice de charge (IC) assigné à chaque dispositif terminal indique, pour éviter toute surcharge, le pourcentage de la charge totale qui peut être raccordée à un circuit téléphonique bouclé utilisé par ce dispositif. La terminaison du circuit bouclé peut être constituée de n'importe quelle combinaison de dispositifs, pourvu que la somme des indices de charge de l'ensemble des dispositifs ne dépasse pas 5.

Notice for Australia

The following notice applies when using the telephony functions:

WARNING

FOR SAFETY REASONS, ONLY CONNECT AUSTEL PERMITTED OR CERTIFIED EQUIPMENT.

Regions where ThinkPad i Series 1200/1300 has ThinkPad modem integrated

Your ThinkPad i Series 1200/1300 computer does not include a modem if it was not purchased within one of the following regions:

US (6CTTAI-27749-M5-E)
Canada (2878 10280A)
Japan (A99-1086JP)
China (10-1685-994610)
Hong Kong (SL399131)
Taiwan (D88-M081-0)
Australia (N79)
New Zealand
Israel
Singapore
Malaysia
Korea
Latin America
Austria
Belgium
Cyprus
Denmark
Finland
France
Germany
Iceland
Ireland
Italy
Luxembourg
Netherlands
Norway

Portugal
Spain (tone only, no pulse dialing)
Sweden
Switzerland (tone only, no pulse dialing)
UK

Notice to New Zealand users of the "Ambit U98.005.C.00 Internal Modem"

This model is approved to operate on the New Zealand telecommunications network under Telepermit number PTC 211/00/085.

1. The grant of a Telepermit for any item of terminal equipment indicates only that Telecom has accepted that the item complies with minimum conditions for connection to its network. It indicates no endorsement of the product by Telecom, nor does it provide any sort of warranty. Above all, it provides no assurance that any item will work correctly in all respects with another item of Telepermitted equipment of a different make or model, nor does it imply that any product is compatible with all of Telecom's network services. This equipment is not capable under all operating conditions of correct operation at the higher speed which it is designated. 33.6 kbps and 56 kbps connections are likely to be restricted to lower bit rates when connected to some PSTN implementations. Telecom will accept no responsibility should difficulties arise in such circumstances.
2. Immediately disconnect this equipment should it become physically damaged, and arrange for its disposal or repair.
3. This modem shall not be used in any manner which could constitute a nuisance to other Telecom customers.
4. Some parameters required for compliance with Telecom's Telepermit requirements are dependent on the equipment (PC) associated with this device. The associated equipment shall be set to operate within the following limits for compliance with Telecom's Specifications:
   a. For repeat calls to the same number: There shall be no more than 10 call attempts to the same number within any 30 minute period for any single manual call initiation, and, The equipment shall go on-hook for a period of not less than 30

seconds between the end of one attempt and the beginning of the next attempt.

b. For Automatic calls to different numbers The equipment shall go on-hook for a period of not less than 5 seconds between the end of one attempt and the beginning of the next attempt.

c. For Automatically answered Incoming Calls Incoming calls shall be answered between 3 and 30 seconds from the start of ringing.

5. For correct operation, the total of the RN's of all devices connected to a single line at any time should not exceed 5. The RN of this modem is 0.5.

Notice for European Union countries

The equipment described here has been approved in accordance with Council Decision 98/482/EC for pan-European single-terminal connection to the Public Switched Telephone Network (PSTN). However, because of differences between the individual PSTNs provided in different countries, the approval does not, of itself, give an unconditional assurance that the equipment will operate successfully on every PSTN network termination point. In the event of problems, you should contact your equipment supplier first. The modem integrated in this equipment is designed to work on the following country or regional networks: Austria, Belgium, Denmark, France, Finland, Germany, Greece, Iceland, Italy, Luxembourg, Netherlands, Norway, Portugal, Spain, Sweden, Switzerland, Republic of Ireland, United Kingdom. Operation in pulse dialing mode is supported only for PBXs. To operate with the networks listed above, the modem should be set as explained in the chapter headed “Use the built-in modem” in the online user's guide.

Notices

Index

B
battery problems 23, 26
BIOS Utility 7
  starting 7

C
CD-ROM
  problems 28
computer display
  problems 30

D
diskette standards 3
display 2
DVD-ROM
  problems 28

E
error codes 18
error messages 18

F
features 2

H
hard disk drive
  problems 27
hardware specifications 4
help
  Web site 40
hibernation mode
  problems 24

I
identification numbers 41
input problems 21

K
keyboard, specifications 2

L
list of options 41
lock 13

M
mechanical lock 13
memory
  specifications 2

N
notices and warranties
  product 43

P
password
  types 10
  using 10
problems, recording 41
Product Recovery program, using 35

R
Recovery CD, using 35
repair services 41

© Copyright IBM Corporation 2000

S

safety notice vii
security
  mechanical lock 13
  passwords 10
size, machine specifications 4
software problems 31
specifications 2, 4
  battery pack 4
  environment 4
  heat output 4
  input voltage 4
  size 4
  temperature 4
standards, diskettes 3

T

temperature, machine specifications 4
ThinkPad Software Selections CD, using 38
troubleshooting 18
  battery problems 23, 26
  CD-ROM problems 28
  computer display problems 30
  DVD-ROM problems 28
  error codes 18
  error messages 18
  errors without codes 20
  errors without messages 20
  hard-disk drive problems 27
  hibernation problems 24
  input problems 21
  keyboard problems 21
  other problems 32
  software problems 31
  standby problems 24
  TrackPoint problems 21

W

warranty
  product 43