User's Manual

The attachment is the part of the user's manual of the specific host device (IBM ThinkPad X40 Series) that indicates the regulatory notices concerning the FCC Part 15 and IC RSS-210/102.

The manuals for other host devices are omitted from this submission, since the contents are almost the same.

ThinkPad® X40 Series Regulatory Notice

First Edition (December 2004)

The following paragraph does not apply to the United Kingdom or any country where such provisions are inconsistent with local law:

INTERNATIONAL BUSINESS MACHINES CORPORATION PROVIDES THIS PUBLICATION "AS IS" WITHOUT ANY WARRANTY OF ANY KIND, EITHER EXPRESS OR IMPLIED, INCLUDING, BUT NOT LIMITED TO, THE LIMITED WARRANTIES OF MERCHANTABILITY OR FITNESS FOR A PARTICULAR PURPOSE. Some states do not allow disclaimers or express or implied warranties in certain transactions; therefore, this statement may not apply to you.

This publication could include technical inaccuracies or typographical errors. Changes are periodically made to the information herein; these changes will be incorporated in new editions of the publication. IBM may make improvements or changes in the products or the programs described in this publication at any time.

It is possible that this publication may contain reference to, or information about, IBM products (machines and programs), programming, or services that are not announced in your country. Such references or information must not be construed to mean that IBM intends to announce such IBM products, programming, or services in your country.

Requests for technical information about IBM products should be made to your IBM authorized dealer or your IBM marketing representative.

© Copyright International Business Machines Corporation 2004. All rights reserved.
US Government Users Restricted Rights – Use, duplication or disclosure restricted by GSA ADP Schedule Contract with IBM Corp.

Contents

Read first — regulatory information. 1

USA — Federal Communications Commission (FCC). 3

Canada — Industry Canada (IC). 11

Electronic emission notices 17

Telecommunication notices 19

Industry Canada requirements 21

Other countries 23
Notice for users in Australia 23
Notice for users in Brazil. 23
Notice for users in India 23
Notice for users in Korea. 24
Notice for users in New Zealand 24
Notice for users in Singapore 25

Trademarks 27

© Copyright IBM Corp. 2004

Read first — regulatory information

Regulatory notice for ThinkPad X40 Series

This notice is a supplementary document of the *ThinkPad® X40 Series Service and Troubleshooting Guide*. Please read this document before you use the ThinkPad X40 Series computer.

The ThinkPad X40 Series computer complies with the radio frequency and safety standards of any country or region in which it has been approved for wireless use. You must install and use your ThinkPad computer in strict accordance with the instructions as described hereafter.

Avis de réglementation pour les ThinkPad X40 Series

Le présent avis est un document qui vient compléter le *Guide de maintenance et d'identification des incidents* ThinkPad X40 Series. Veuillez lire ce document avant d'utiliser l'ordinateur ThinkPad X40 Series.

L'ordinateur ThinkPad X40 Series est conforme aux normes de sécurité et de radiofréquence du pays ou de la région où son utilisation sans fil est agréée. Vous devez installer et utiliser votre ordinateur ThinkPad en respectant scrupuleusement les instructions décrites ci-après.

ThinkPad(R) X40 시리즈 규격에 관련된 사항

이 문서는 ThinkPad X40 시리즈 사용 설명서의 보충 설명서입니다.
ThinkPad X40 시리즈 컴퓨터를 사용하기 전에 반드시 이 문서를 읽어 보십시오.

ThinkPad X40 시리즈 컴퓨터는 무선을 사용할 수 있도록 인증된 어떠한 국가 또는
지역에서라도 사용될 수 있도록 전파 형식 등록과 안전 기준에 적합하게 만들어졌습니다.
반드시 사용 설명서에 언급된 지시 사항에 따라 ThinkPad 컴퓨터를 설치하고 사용해야 합니다.

© Copyright IBM Corp. 2004

USA — Federal Communications Commission (FCC)

This device complies with part 15 of the FCC Rules. Operation is subject to the following two conditions:

1. This device may not cause harmful interference, and
2. this device must accept any interference received, including interference that may cause undesired operation.

User installable wireless modules

- Mini-PCI Cards
  - FCC ID: ANO20020201CLK, Model: WM3B2100 (Intel® PRO/Wireless LAN 2100 3B Mini PCI Adapter)
  - FCC ID: ANO20040501CX2, Model: WM3B2200BG (Intel PRO/Wireless 2200BG Mini-PCI Adapter from IBM)
  - FCC ID: ANO20040601CX2, Model: WM3B2915ABG (Intel Pro/Wireless 2915ABG mini-PCI Adapter)
  - FCC ID: ANO20030500CMR, Model: T60H786-U (IBM 11b/g Wireless LAN Mini PCI Adapter)
  - FCC ID: ANO20040600BTL, Model: AR5BMB-44 (IBM 11a/b/g Wireless LAN Mini PCI Adapter II)
- Communication Daughter Cards (CDC)
  - FCC ID: ANO20020100MTN, Model: BMDC200 (IBM Integrated *Bluetooth* III with 56K Modem)
  - FCC ID: ANO20040700HER, Model: J07M067 (IBM Integrated *Bluetooth* IV with 56K Modem)

Wireless LAN Mini-PCI Cards marketed in the USA and Canada, except the model WM3B2100, do not support nor function in the extended channels (12ch, 13ch). If you use the model WM3B2100 with your ThinkPad computer, you must not select the Extended Channel Mode to avoid the unlikely possibility of unauthorized operation when the device is operated in the USA and Canada.

i) FCC ID of wireless modules

There is no FCC ID for Mini-PCI Cards shown on the enclosure of your ThinkPad computer. Instead you will find an indicator pointing to the location of the FCC ID on the bottom side of your ThinkPad computer as shown in the figure i-1). Also the location of the FCC ID's indicator for CDC is shown in the figure i-2). The FCC IDs are affixed on each approved module installed in the Mini-PCI Card slot or the CDC slot.

© Copyright IBM Corp. 2004

i-1) Mini-PCI Cards:

FCC ID: ANO20020201CLK, Model: WM3B2100

FCC ID: ANO20040501CX2, Model: WM3B2200BG

FCC ID: ANO20040601CX2, Model: WM3B2915ABG

FCC ID: ANO20030500CMR, Model: T60H786-U

FCC ID: ANO20040600BTL, Model: AR5BMB-44

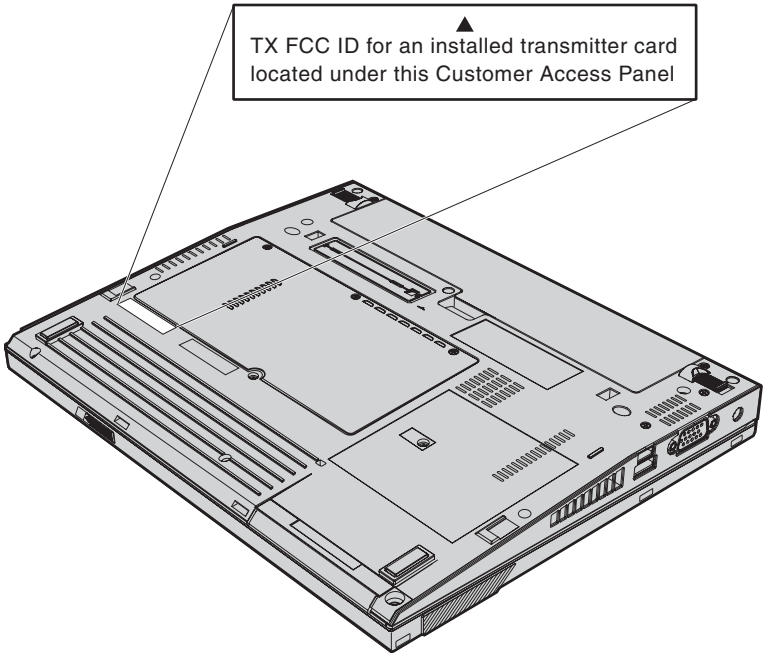

i-2) CDC

FCC ID: ANO20040700HER, Model: J07M067

FCC ID: ANO20020100MTN, Model: BMDC200

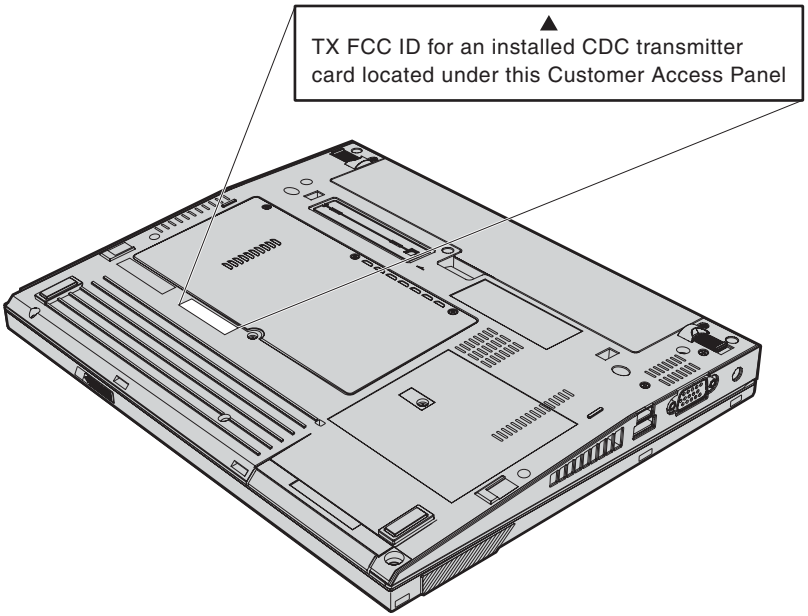

ii) Installation of approved wireless modules

If no integrated wireless LAN Mini-PCI Card or RF CDC module has been preinstalled in your ThinkPad computer, you can install one, provided by IBM as an option. Plug the wireless card option into the Mini-PCI Card slot or CDC slot located under the expansion slot cover of your ThinkPad computer as shown below.

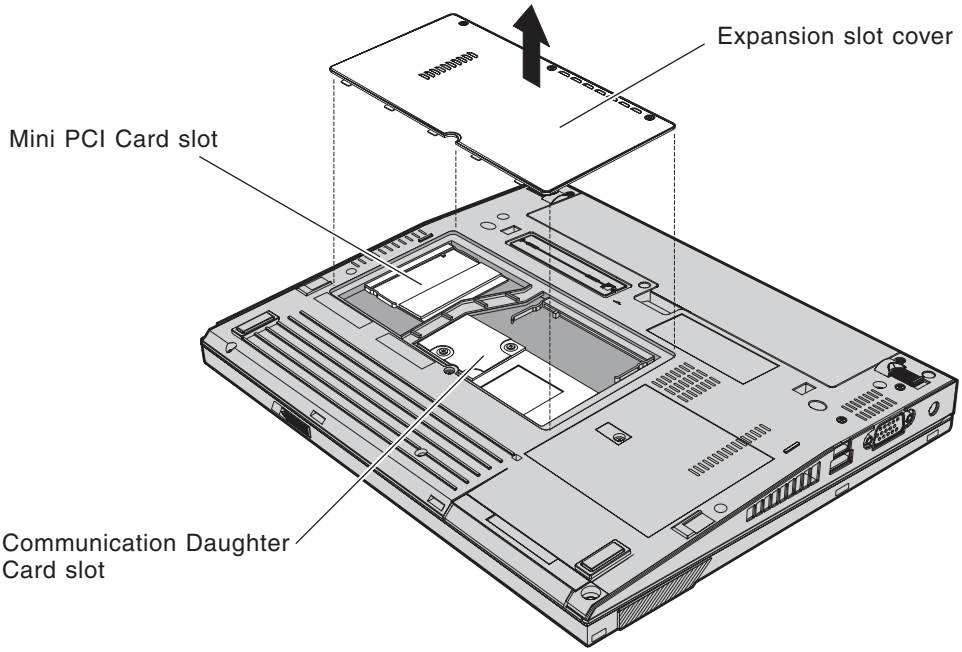

Attention: The ThinkPad X40 Series computer contains an authentication mechanism
If you install an unauthorized wireless LAN Mini-PCI Card or RF CDC module that is not approved for use in the ThinkPad X40 Series computer, the computer will not start, but only displays an error message and emits beeps.

iii) The FCC RF safety requirement

The radiated output power of the Wireless LAN Mini-PCI Cards or RF CDC module authorized to use for the ThinkPad X40 Series computer is far below the FCC radio frequency exposure limits. Nevertheless, the ThinkPad X40 Series computer shall be used in such a manner that the potential for human contact during normal operation is minimized as follows:

Caution: To comply with FCC RF exposure compliance requirements, a separation distance of at least 20 cm (8 inches) must be maintained between the antenna for the integrated Wireless LAN Mini PCI Card built in to the screen section and all persons. You are not allowed to disable "standby mode" for the power management function, if you cannot maintain the sufficient antenna separation (at least 20 cm) in any case the LCD is left opened or closed.

FCC ID: ANO20020201CLK, Model: WM3B2100

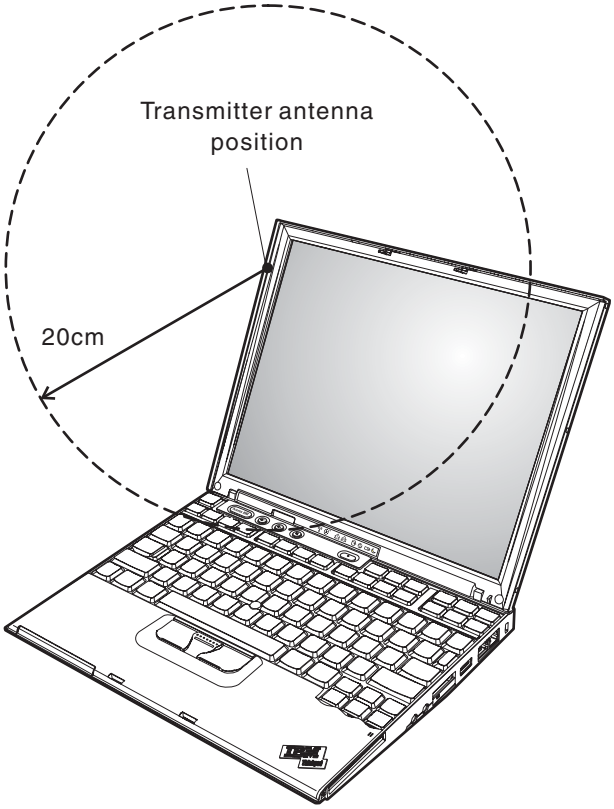

FCC ID: ANO20040501CX2, Model: WM3B2200BG
FCC ID: ANO20040601CX2, Model: WM3B2915ABG
FCC ID: ANO20030500CMR, Model: T60H786-U
FCC ID: ANO20040600BTL, Model: AR5BMB-44

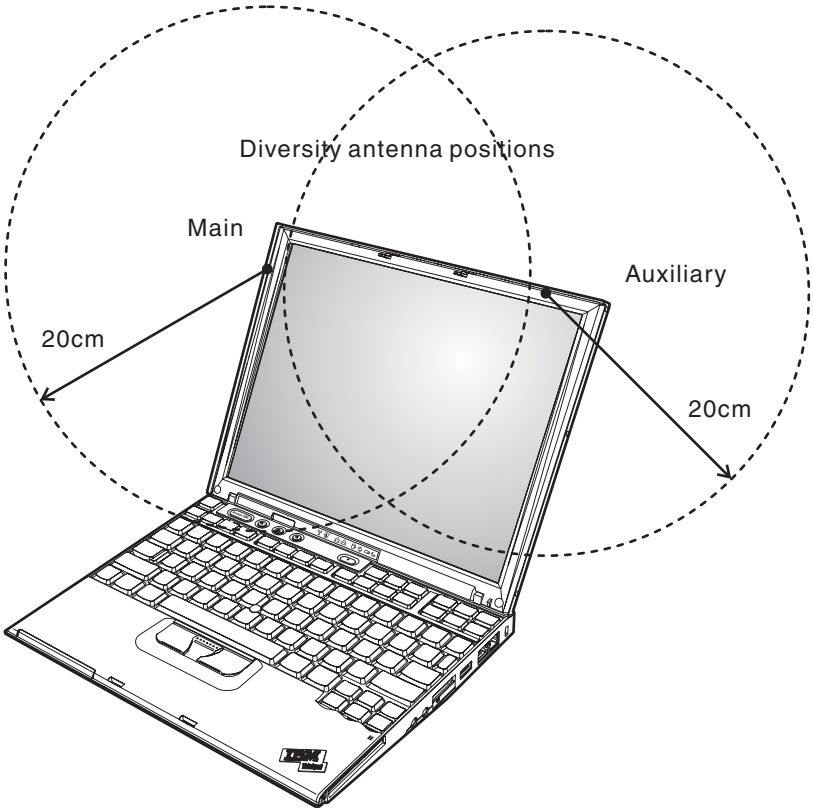

Note: The transmission diversity function is implemented for the cards listed above (models WM3B2200BG, WM3B2915ABG, T60H786-U, AR5BMB-44). The function does not emit radio frequencies simultaneously from both antennas. One of the antennas is selected automatically or manually (by users) to have good quality of radiocommunication.

FCC ID: ANO20040700HER, Model: J07M067
FCC ID: ANO20020100MTN, Model: BMDC200

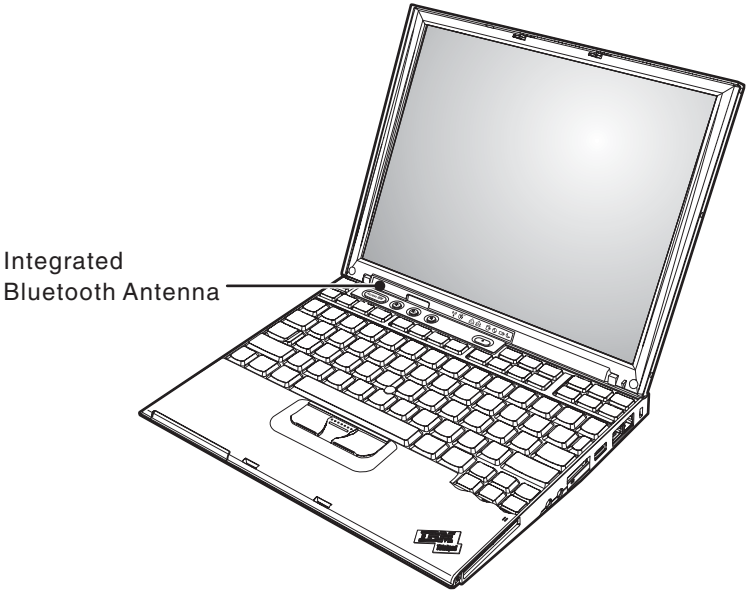

Note: The antenna of the models J07M067 and BMDC200 is located on the bottom of the computer lid. Transmitted energy from the *Bluetooth* device is very low compared to other RF devices. Therefore a 20 cm separation from the *Bluetooth* antenna is not required.

Use of wireless options

Your ThinkPad computer is approved for use of one of the granted Wireless LAN Mini-PCI Cards together with one of the granted *Bluetooth* modules (FCC ID: ANO20040700HER or ANO20020100MTN) in the CDC slot simultaneously. Make sure of the following conditions on use of these wireless features.

1. When you use any other RF option device, all other wireless features including the integrated Wireless LAN Mini-PCI Card and *Bluetooth* transmitters in your ThinkPad computer are required to be turned off.
2. Users must follow the RF Safety instructions on wireless option devices that are included in the RF option device's user's manual.

iv) Radio Frequency interference requirements

An improper installation or unauthorized use may cause harmful interference to radio communications. Also, unauthorized changes or modifications could void the user's authority to operate the equipment. Refer to the "Electronic emission notices" on page 17 for more detail.

When you use the models AR5BMB-44 (IBM 11a/b/g Wireless LAN Mini PCI Adapter II) or WM3B2915ABG (Intel Pro/Wireless 2915ABG mini-PCI Adapter):

- This device is restricted to indoor use due to its operation in the 5.15 to 5.25 GHz frequency range. FCC requires this product to be used indoors for the frequency range 5.15 to 5.25 GHz to reduce the potential for harmful interference to co-channel Mobile Satellite systems.
- High power radar are allocated as primary users of the 5.25 to 5.35 GHz and 5.65 to 5.85 GHz bands. These radar stations can cause interference with and/or damage this device.

Canada — Industry Canada (IC)

Certification number

The certification number of Industry Canada for each approved Mini-PCI wireless card or RF Communication Daughter Card (CDC) is affixed on each module installed in the Mini-PCI Card slot or the CDC slot as shown below.

The applied wireless cards are:

- IC: 349E-WM3B2100, Model:WM3B2100 (Intel PRO/Wireless LAN 2100 3B Mini PCI Adapter)
- IC: 349E-WM3B22BG, Model: WM3B2200BG (Intel PRO/Wireless 2200BG Mini-PCI Adapter from IBM)
- IC: 349E-WM3B29AG, Model: WM3B2915ABG (Intel Pro/Wireless 2915ABG mini-PCI Adapter)
- IC: 349E-T60H786U, Model: T60H786-U (IBM 11b/g Wireless LAN Mini PCI Adapter)
- IC: 349E-AR5BMB44, Model: AR5BMB-44 (IBM 11a/b/g Wireless LAN Mini PCI Adapter II)
- IC: 349E-J07M067, Model: J07M067 (IBM Integrated *Bluetooth* IV with 56K Modem)
- IC: 349E-BMDC200, Model: BMDC200 (IBM Integrated *Bluetooth* III with 56K Modem)

© Copyright IBM Corp. 2004

Wireless LAN Mini-PCI Cards marketed in the USA and Canada, except model WM3B2100, do not support nor function in the extended channels (12ch, 13ch). If you use the model WM3B2100 with your ThinkPad computer, you must not select the Extended Channel Mode to avoid the unlikely possibility of unauthorized operation when the device is operated in the USA and Canada.

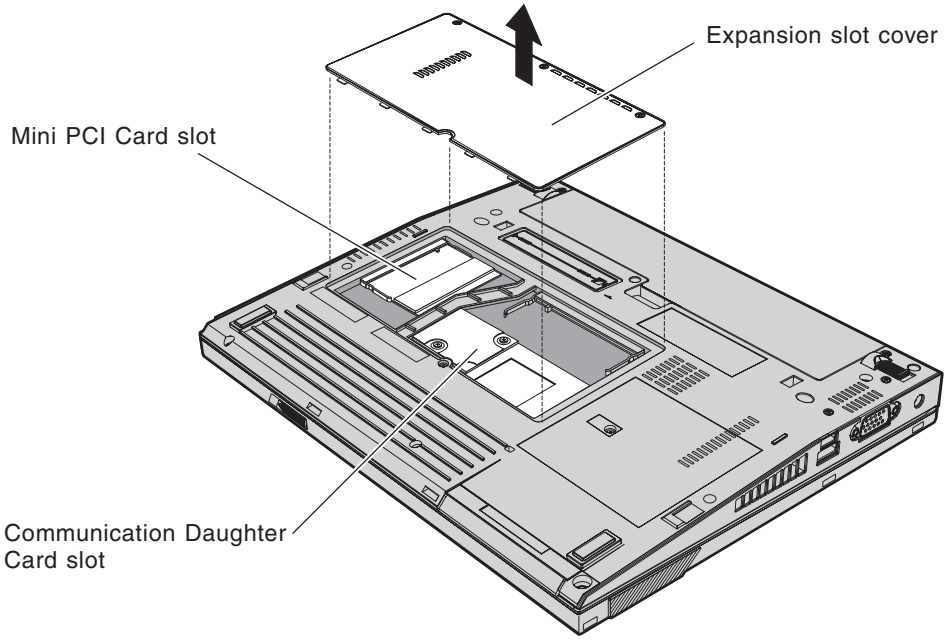

Attention: The ThinkPad X40 Series computer contains an authentication mechanism
You can install or remove each wireless feature by yourself. If you install an unauthorized wireless adapter that is not approved for use in the ThinkPad X40 Series computer, the computer will not start, but only displays an error message and emits beeps.

Low power license-exempt radiocommunication devices (RSS-210)

Operation is subject to the following two conditions:

1. This device may not cause interference, and
2. this device must accept any interference, including interference that may cause undesired operation of the device.

When you use the model AR5BMB-44 (IBM 11a/b/g Wireless LAN Mini PCI Adapter II) or WM3B2915ABG (Intel Pro/Wireless 2915ABG mini-PCI Adapter):

- The device for the band 5150–5250 MHz is only for indoor usage to reduce potential for harmful interference to co-channel Mobile Satellite systems.
- High power radars are allocated as primary users (meaning they have priority) of 5250–5350 MHz and 5650–5850 MHz and these radars could cause interference and/or damage to LELAN (Licence-Exempt Local Area Network) devices.

Exposure of humans to RF fields (RSS-102)

ThinkPad X40 Series computers employ low gain integral antennas that do not emit RF field in excess of Health Canada limits for the general population; consult Safety Code 6, obtainable from Health Canada's Web site at www.hc-sc.gc.ca/rpb

Numéro d'homologation

Le numéro d'homologation d'Industrie Canada pour chaque carte Mini-PCI sans fil homologuée ou carte RF CDC (Communication Daughter Card) est indiqué sur chaque module installé dans l'emplacement Mini-PCI Card ou CDC comme illustré ci-dessous.

Les cartes sans fil applicables sont les suivantes:

- IC: 349E-WM3B2100, Model:WM3B2100 (Intel PRO/Wireless LAN 2100 3B Mini PCI Adapter)
- IC: 349E-WM3B22BG, Model: WM3B2200BG (Intel PRO/Wireless 2200BG Mini-PCI Adapter from IBM)
- IC: 349E-WM3B29AG, Model: WM3B2915ABG (Intel Pro/Wireless 2915ABG mini-PCI Adapter)
- IC: 349E-T60H786U, Model: T60H786-U (IBM 11b/g Wireless LAN Mini PCI Adapter)
- IC: 349E-AR5BMB44, Model: AR5BMB-44 (IBM 11a/b/g Wireless LAN Mini PCI Adapter II)
- IC: 349E-J07M067, Model: J07M067 (IBM Integrated *Bluetooth* IV with 56K Modem)
- IC: 349E-BMDC200, Model: BMDC200 (IBM Integrated *Bluetooth* III with 56K Modem)

Les cartes de réseau local sans fil mini-PCI commercialisées aux Etats-Unis et au Canada, à l'exception du modèle WM3B2100, ne prennent pas en charge les canaux étendus (12ch, 13ch) et ne fonctionnent donc pas sur de tels canaux. Si vous utilisez le modèle WM3B2100 avec votre ordinateur ThinkPad dans ces pays, vous devez sélectionner le mode canal étendu pour éviter toute possibilité (bien que peu probable) d'utilisation non autorisée.

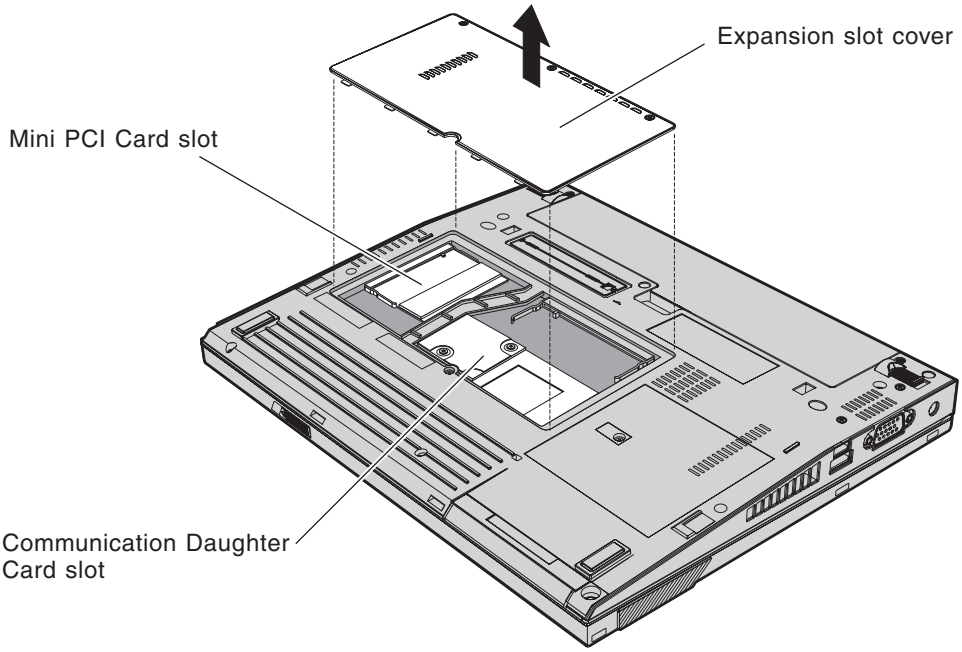

Attention: L'ordinateur ThinkPad X40 Series contient un mécanisme d'authentification.
Vous pouvez installer ou désinstaller tout dispositif sans fil. Si vous installez une carte sans fil qui n'est pas homologuée pour l'ordinateur ThinkPad X40 Series, l'ordinateur ne démarrera pas; un message d'erreur sera affiché et des bips sonores seront émis.

Remarque relative aux appareils de communication radio de faible puissance sans licence (CNR-210)

Le fonctionnement de ce type d'appareil est soumis aux deux conditions suivantes:

1. Cet appareil ne doit pas perturber les communications radio, et
2. cet appareil doit supporter toute perturbation, y compris les perturbations qui pourraient provoquer son dysfonctionnement.

Lorsque vous utilisez le modèle AR5BMB-44 (IBM 11a/b/g Wireless LAN Mini PCI Adapter II) ou WM3B2915ABG (Intel Pro/Wireless 2915ABG mini-PCI Adapter):

- Tout appareil destiné à la bande 5150-5250 MHz devra être exclusivement utilisé en intérieur afin de réduire les risques de perturbations électromagnétiques gênantes sur les systèmes de satellite mobile dans un même canal.
- Les radars à forte puissance sont désignés comme les utilisateurs principaux (c'est-à-dire qu'ils sont prioritaires) des bandes 5250-5350 MHz et 5650-5850 MHz. Ils peuvent provoquer des perturbations électromagnétiques sur les appareils de type LELAN (réseau de communication local sans licence) ou les endommager.

Exposition des êtres humains aux champs radioélectriques (RF) (CNR-102)

Le ThinkPad X40 Series utilise des antennes intégrales à faible gain qui n'émettent pas un champ électromagnétique supérieur aux normes imposées par le Ministére de la santé canadien pour la population. Consultez le Safety Code 6 sur le site Web du Ministére de la santé canadien à l'adresse "www.hc-sc.gc.ca/rpb".

Electronic emission notices

Federal Communications Commission (FCC) Statement

- Intel PRO/Wireless LAN 2100 3B Mini PCI Adapter
- Intel PRO/Wireless 2200BG Mini-PCI Adapter from IBM
- Intel Pro/Wireless 2915ABG mini-PCI Adapter
- IBM 11b/g Wireless LAN Mini PCI Adapter
- IBM 11a/b/g Wireless LAN Mini PCI Adapter II
- IBM Integrated *Bluetooth* IV with 56K Modem
- IBM Integrated *Bluetooth* III with 56K Modem

This equipment has been tested and found to comply with the limits for a Class B digital device, pursuant to Part 15 of the FCC Rules. These limits are designed to provide reasonable protection against harmful interference in a residential installation. This equipment generates, uses, and can radiate radio frequency energy and, if not installed and used in accordance with the instructions, may cause harmful interference to radio communications. However, there is no guarantee that interference will not occur in a particular installation. If this equipment does cause harmful interference to radio or television reception, which can be determined by turning the equipment off and on, the user is encouraged to try to correct the interference by one or more of the following measures:

- Reorient or relocate the receiving antenna.
- Increase the separation between the equipment and receiver.
- Connect the equipment into an outlet on a circuit different from that to which the receiver is connected.
- Consult an IBM authorized dealer or service representative for help.

IBM is not responsible for any radio or television interference caused by using other than recommended cables and connectors or by unauthorized changes or modifications to this equipment. Unauthorized changes or modifications could void the user's authority to operate the equipment.

This device complies with Part 15 of the FCC Rules. Operation is subject to the following two conditions: (1) this device may not cause harmful interference, and (2) this device must accept any interference received, including interference that may cause undesired operation.

Responsible Party:

© Copyright IBM Corp. 2004

International Business Machines Corporation
New Orchard Road
Armonk, NY 10504
Telephone 1-919-543-2193

Tested To Comply
With FCC Standards

FOR HOME OR OFFICE USE

Industry Canada Class B Emission Compliance Statement
This Class B digital apparatus complies with Canadian ICES-003.

Avis de conformité à la réglementation d'Industrie Canada
Cet appareil numérique de la classe B est conforme à la norme NMB-003 du Canada.

European Community Directive Conformance Statement
This product is in conformity with the protection requirements of EU Council Directive 89/336/EEC on the approximation of the laws of the Member States relating to electro-magnetic compatibility. IBM cannot accept responsibility for any failure to satisfy the protection requirements resulting from a non-recommended modification of the product, including the fitting of non-IBM option cards.

This product satisfies the Class B limits of EN 55022.

Telecommunication notices

Federal Communications Commission (FCC) and Telephone Company Requirements (Part 68 of the FCC Rules)

1. The Telephone Consumer Protection Act of 1991 makes it unlawful for any person to use a computer or other electronic device to send any message via a telephone fax machine unless such message clearly contains in a margin at the top or bottom of each transmitted page or on the first page of the transmission, the date and time it is sent, and an identification of the business or other entity, or other individual sending the message and the telephone number of the sending machine or such business, other entity, or individual.

   In order to program this information into your computer, you should be sure to follow the installation instructions for your fax software package.
2. This equipment complies with Part 68 of the FCC rules and the requirements adopted by the ACTA. On this equipment is a label that contains, among other information, a product identifier in the format US:AAAEQ##TXXXX. If requested, this number must be provided to the telephone company.
3. The REN is used to determine the number of devices that may be connected to a telephone line. Excessive RENs on a telephone line may result in the devices not ringing in response to an incoming call. In most but not all areas, the sum of RENs should not exceed five (5.0). To be certain of the number of devices that may be connected to a line, as determined by the total RENs, contact the local telephone company. The REN for this product is part of the product identifier that has the format US:AAAEQ##TXXXX. The digits represented by ## are the REN without a decimal point (e.g., 03 is a REN of 0.3).
4. If the built-in modem causes harm to the telephone network, the telephone company may discontinue your service temporarily. If possible, they will notify you in advance. But, if advance notice isn't practical, you will be notified as soon as possible. You will be advised of your right to file a complaint with the FCC.
5. Your telephone company may make changes in its facilities, equipment, operations, or procedures that could affect the proper operation of your equipment. If they do, you will be given advance notice so as to give you an opportunity to maintain uninterrupted service.
6. If you experience trouble with this built-in modem, contact your IBM Authorized Seller, or the IBM Corporation, 500 Columbus Avenue, Thornwood, NY 10594, 1-800-772-2227, for repair/warranty information. The telephone company may ask you to disconnect this equipment from

© Copyright IBM Corp. 2004

the network until the problem has been corrected, or until you are sure the equipment is not malfunctioning.

7. No customer repairs are possible to the modem. If you experience trouble with this equipment, contact your Authorized Seller or the IBM Corporation for information.
8. The modem may not be used on coin service provided by the telephone company. Connection to party lines is subject to state tariffs. Contact your state public utility commission or corporation commission for information.
9. When ordering network interface (NI) service from the Local Exchange Carrier, specify service arrangement USOC RJ11C.
10. A plug and jack used to connect this equipment to the premises wiring and telephone network must comply with the applicable FCC Part 68 rules and requirements adopted by the ACTA. A compliant telephone cord and modular plug is provided with this product. It is designed to be connected to a compatible modular jack that is also compliant. See installation instructions for details.
11. If your home has specially wired alarm equipment connected to the telephone line, ensure the installation of this Data/Fax Modem does not disable your alarm equipment. If you have questions about what will disable alarm equipment, consult your telephone company or a qualified installer.
12. The software contained in this Data/Fax Modem to allow user access to the network must be upgraded to recognize newly established network area codes and exchange codes as they are placed into service.

Industry Canada requirements

Notice
This equipment meets the applicable Industry Canada Terminal Equipment Technical Specifications. This is confirmed by the registration number. The abbreviation, IC, before the registration number signifies that registration was performed based on a Declaration of Conformity indicating that Industry Canada technical specifications were met. It does not imply that Industry Canada approved the equipment.

Before installing this equipment, users should ensure that it is permissible to be connected to the facilities of the local telecommunications company. The equipment must also be installed using an acceptable method of communication. In some cases, the company's inside wiring associated with a single line individual service may be extended by means of a certified connector assembly (telephone extension cord). The customer should be aware that compliance with the above conditions may not prevent degradation of service in some situations.

Repairs to certified equipment should be made by an authorized Canadian maintenance facility designated by the supplier. Any repairs of alterations made by the user to this equipment, or equipment malfunctions, may give the telecommunications company cause to request the user to disconnect the equipment.

Users should ensure for their own protection that the electrical ground connections of the power utility, telephone lines and internal metallic water pipe system, if present, are connected together. This precaution may be particularly important in rural areas.

Caution
Users should not attempt to make such connections themselves, but should contact the appropriate electric inspection authority, or electrician, as appropriate.

The Ringer Equivalence Number (REN) for this terminal equipment is 0.0. The REN assigned to each terminal equipment provides an indication of the maximum number of terminals allowed to be connected to a telephone interface. The termination on an interface may consist of any combination of devices subject only to the requirement that the sum of the Ringer Equivalence Numbers of all the devices does not exceed five.

© Copyright IBM Corp. 2004

Avis
Le présent matériel est conforme aux spécifications techniques d'Industrie Canada applicables au matériel terminal. Cette conformité est confirmée par le numéro d'enregistrement. Le sigle IC, placé devant le numéro d'enregistrement, signifie que l'enregistrement s'est effectué conformément à une déclaration de conformité et indique que les spécifications techniques d'Industrie Canada ont été respectées. Il n'implique pas qu'Industrie Canada a approuvé le matériel.

Avant d'installer ce matériel, l'utilisateur doit s'assurer qu'il est permis de le raccorder aux installations de l'entreprise locale de télécommunication. Le matériel doit également être installé en suivant une méthode acceptée de raccordement. Dans certains cas, les fils intérieurs de l'entreprise utilisés pour un service individuel à ligne unique peuvent être prolongés au moyen d'un dispositif homologué de raccordement (cordon prolongateur téléphonique interne). L'abonné ne doit pas oublier qu'il est possible que la conformité aux conditions énoncées ci-dessus n'empechent pas la dégradation du service dans certaines situations. Actuellement, les entreprises de télécommunication ne permettent pas que l'on raccorde leur matériel à des jacks d'abonné, sauf dans les cas précis prévus par les tarifs paticuliers de ces entreprises.

Les réparations de matériel homologué doivent être effectuées par un centre d'entretien canadien autorisé désigné par le fournisseur. La compagnie de télécommunications peut demander à l'utilisateur de débrancher un appareil à la suite de réparations ou de modifications effectuées par l'utilisateur ou à cause de mauvais fonctionnement.

Pour sa propre protection, l'utilisateur doit s'assurer que tous les fils de mise à la terre de la source d'énergie électrique, des lignes téléphoniques et des canalisations d'eau métalliques, s'il y en a, sont raccordés ensemble. Cette précaution est particulièrement importante dans les régions rurales.

Avertissement
L'utilisateur ne doit pas tenter de faire ces raccordements lui-même; il doit avoir recours à un service d'inspection des installations électriques, ou à électricien, selon le cas.

L'indice d'équivalence de la sonnerie (IES) du présent matériel est de 0.0. L'IES assigné à chaque dispositif terminal indique le nombre maximal de terminaux qui peuvent être raccordés à une interface téléphonique. La terminaison d'une interface peut consister en une combinaison quelconque de dispositifs, à la seule condition que la somme d'indices d'équivalence de la sonnerie de tous les dispositifs n'excède pas 5.

Other countries

Notice for users in Australia

For models: J07M070 and J07M067
The following notice applies when using the telephony functions:

WARNING: FOR SAFETY REASONS, ONLY CONNECT EQUIPMENT WITH A TELECOMMUNICATIONS COMPLIANCE LABEL. THIS INCLUDES CUSTOMER EQUIPMENT PREVIOUSLY LABELLED PERMITTED OR CERTIFIED.

Notice for users in Brazil

For models: J07M067, WM3B2100, WM3B2200BG, WM3B2915ABG, T60H786, AR5BMB-44

Portuguese	Este equipamento opera em caráter secundário, isto é, não tem direito a proteção contra interferência prejudicial, mesmo de estações do mesmo tipo, e não pode causar interferência a sistemas operando em caráter primário
English	This equipment is a secondary type device, that is, it is not protected against harmful interference, even if the interference is caused by a device of the same type, and it also cannot cause any interference to primary type devices.

Notice for users in India

For models: J07M067 and WM3B2100
The equipment type approval does not imply that the frequencies will be cleared automatically/operating licence will be granted as these are matters to be examined on case by case basis on the receipt of the application to WPC.

For model: WM3B2200BG
The WM3B2200BG equipment is typed approved in India for use of the IEEE 802.11b mode only in indoor applications. All other types of usages require specific wireless license from Wireless Planning & Coordination (WPC) Wing of Ministry of Communications and Information Technology of India

© Copyright IBM Corp. 2004

Notice for users in Korea

For model: J07M070
Please note that this device has been certified for residential use and may be used in any environment.

이 기기는 가정용으로 전자파적합등록을 한 기기로서 주거 지역에서는 물론 모든 지역에서 사용할 수 있습니다.

For models: J07M067, WM3B2100, WM3B2200BG, WM3B2915ABG, T60H786, AR5BMB-44
Please note that this device has been certified for residential use and may be used in any environment.

당해 무선설비는 운용중 전파혼신 가능성이 있음.

(It means that this wireless device may cause radio wave interference during operation)

Notice for users in New Zealand

Ambit J07M070 V.92 Data/Fax Modem: Telepermit No. PTC 211/03/081
The grant of a Telepermit for any item of terminal equipment indicates only that Telecom has accepted that the item complies with minimum conditions for connection to its network. It indicates no endorsement of the product by Telecom, nor does it provide any sort of warranty. Above all, it provides no assurance that any item will work correctly in all respects with another item of Telepermitted equipment of a different make or model, nor does it imply that any product is compatible with all of Telecom's network services.

This equipment is not capable, under all operating conditions, of correct operation at the higher speeds for which it is designed. Telecom will accept no responsibility should difficulties arise in such circumstances. This warning typically applies to 56 kbit/s modems.

This equipment may not provide for the effective hand-over of a call to another device connected to the same line.

Some parameters required for compliance with Telecom's Telepermit requirements are dependent on the equipment (PC) associated with this device. The associated equipment shall be set to operate within the following limits for compliance with Telecom's specifications:

- There shall be no more than 10 call attempts to the same number within any 30 minute period for any single manual call initiation, and

- The equipment shall go on-hook for a period of not less than 30 seconds between the end of one attempt and the beginning of the next call attempt, and
- Automatic calls to different numbers shall be spaced such that there is not less than 5 seconds between the end of one call attempt and the beginning of another, and
- Incoming calls shall be answered between 3 and 30 seconds of receipt of ringing.

This equipment shall not be set up to make automatic calls to Telecom's 111 Emergency Service.

The availability of the Modem on Hold feature is dependent on whether or not your Internet Service Provider and the Telecom network are connected to offer this feature.

Any attempt to make use of "Modem on Hold" with this particular type of modem may work incorrectly due to the unequal sharing of the current fed to your line by this modem and the telephone you are using. No guarantees can be given as to the effectiveness of the Modem on Hold feature offered by this modem. **Such problems are NOT a network fault and should not be reported to Telecom.**

Telecom can accept no liability for the mis-operation of the Modem on Hold facilities with devices of this type. Only modems Telepermitted in the PTC 218-series are recognised as being V.92 Modem on Hold capable.

Notice for users in Singapore

For models: J07M067, WM3B2100, WM3B2200BG, WM3B2915ABG, T60H786, AR5BMB-44
OPERATING CONDITIONS UNDER WHICH THE RADIOCOMMUNICATION EQUIPMENT ARE EXEMPTED FROM LICENSING

To maximize frequency sharing while minimizing radio interference, the following operating conditions are imposed to confine the propagation of radio signals within a building or at a localised site:
a) The radiocommunication equipment shall be used for in-building or localised on-site operations;
b) The radiocommunication equipment shall operate at frequencies or frequency bands designated by IDA on non-exclusive basis;
c) The radiocommunication equipment shall not operate beyond the maximum permissible output power designated by IDA to confine the propagation of radio signals to a small localised area;

d) For an on-site localised operation with little obstruction by the nearby buildings or terrain, height of any external antenna, if installation approved by IDA, shall not be more than 10 metres above ground level to limit the radio wave propagation; and

e) No repeater station shall be used to extend the radio coverage.

Trademarks

The following terms are trademarks of the IBM Corporation in the United States or other countries or both:

IBM
IBM (logo)
ThinkPad

Intel is a trademark of Intel Corporation in the United States, other countries, or both.

Other company, product, and service names may be trademarks or service marks of others.

© Copyright IBM Corp. 2004

Part Number: 27R0910

Printed in USA

(1P) P/N: 27R0910