Antenna Information
ThinkPad X41 Tablet Series

1. Antenna Specification

Transmission Antenna assembly overview

Antenna Designator	Manufacture	Antenna type	Cable type and length	Peak Gain (dBi) *1		
				Frequency band	**Notebook** operation mode *2	**Tablet** operation mode *2
91P6908 Main Antenna	Wistron Neweb Corp. (R.O.C.)	Dual Band Meander (Inverted F) Antenna	Coax 600mm	2400-2500MHz	- 1.37 dBi	- 0.15 dBi
				5725-5850MHz	0.84 dBi	-0.35 dBi
91P6909 Auxiliary Antenna			Coax 450mm	2400-2500MHz	1.77 dBi	1.82 dBi
				5725-5850MHz	-0.28 dBi	0.37 dBi

Notes:
**1: Includes all cable losses, and antenna type should be Omni Directional.*

**2: Operation modes*

"**Notebook**" operation mode

"**Tablet**" operation mode

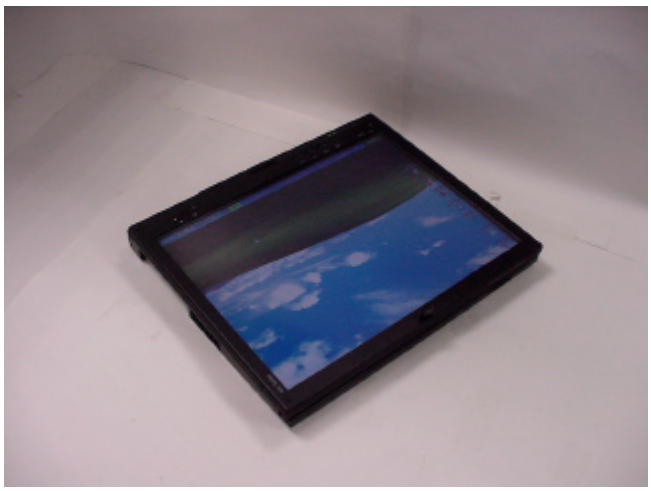

2. Radiation characteristic of antennas

The measurements were performed for both “Notebook” and “Tablet” operation modes.

Radiation characteristic of antenna is measured in regard to the rotation angle x° as shown below.

“Notebook” operation mode

Main Antenna

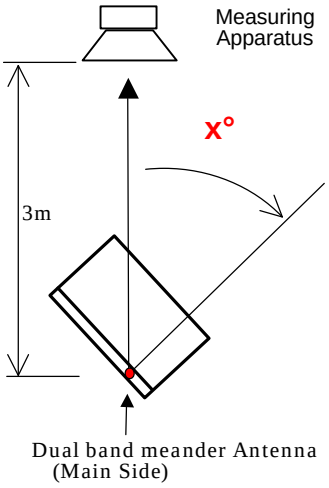

Auxiliary Antenna

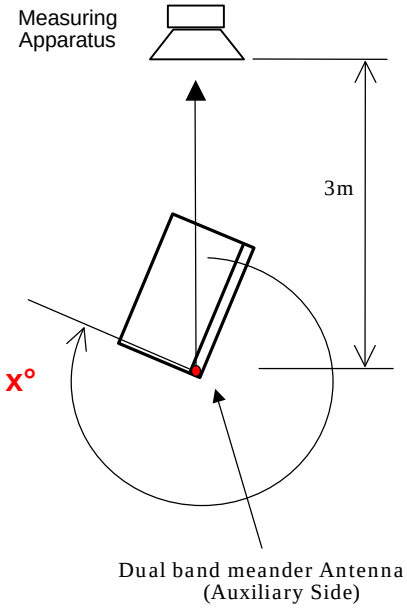

“Tablet” operation mode

Main Antenna

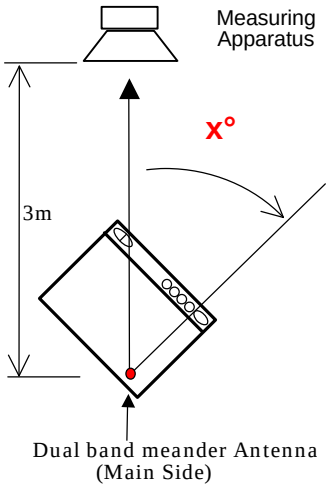

Auxiliary Antenna

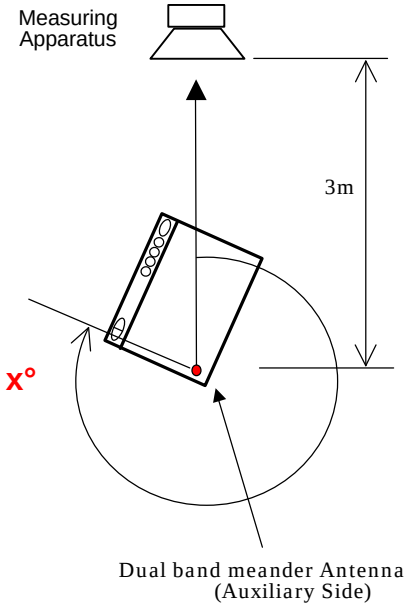

2.2.1 2400-2500MHz radiation characteristic

Main antenna

- Notebook operation mode

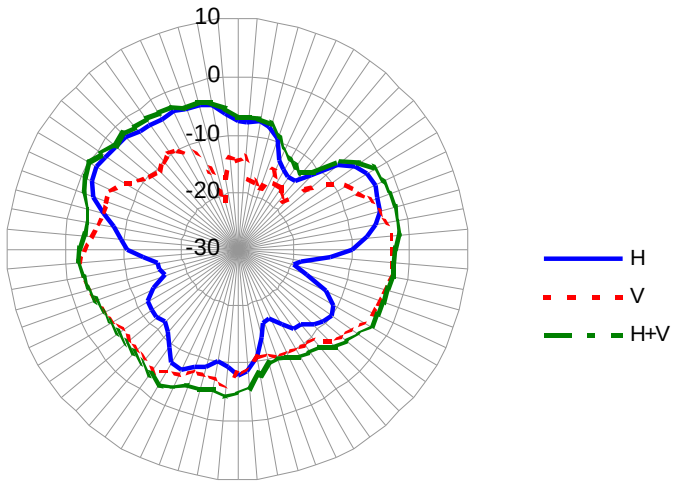

Hori (dBi) ave.	-7.24
Vert (dBi) ave.	-6.68
H+V (dBi) ave.	-3.94
Peak(dBi) **(H)**	-1.37
Peak Angle **(Xº=)**	300º
Center Frequency	2450MHz

- Tablet operation mode

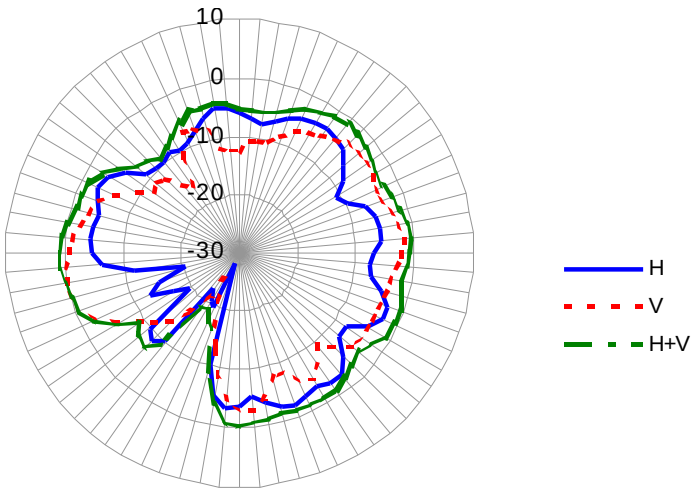

Hori (dBi) ave.	-6.11
Vert (dBi) ave.	-5.22
H+V (dBi) ave.	-2.63
Peak(dBi) **(V)**	-0.15
Peak Angle **(Xº=)**	260º
Center Frequency	2450MHz

Note1) The measurement was performed at 3 frequencies (2400, 2450, 2500MHz).
Note2) The maximum antenna gain was found around **260 degree** angle from measuring apparatus in **Vertical** polarization at the middle frequency (2450MHz) of **Tablet operation mode**.

Auxiliary antenna

- Notebook operation mode

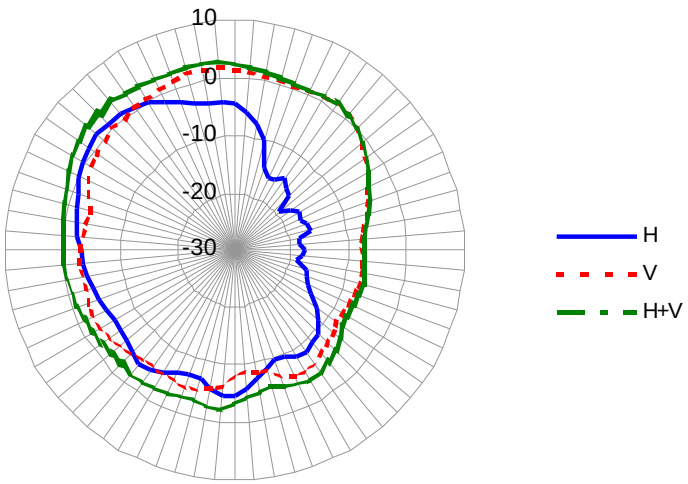

Hori (dBi) ave.	-4.95
Vert (dBi) ave.	-2.44
H+V (dBi) ave.	-0.51
Peak(dBi) **(V)**	1.77
Peak Angle **(Xº=)**	350º
Center Frequency	2500MHz

- Tablet operation mode

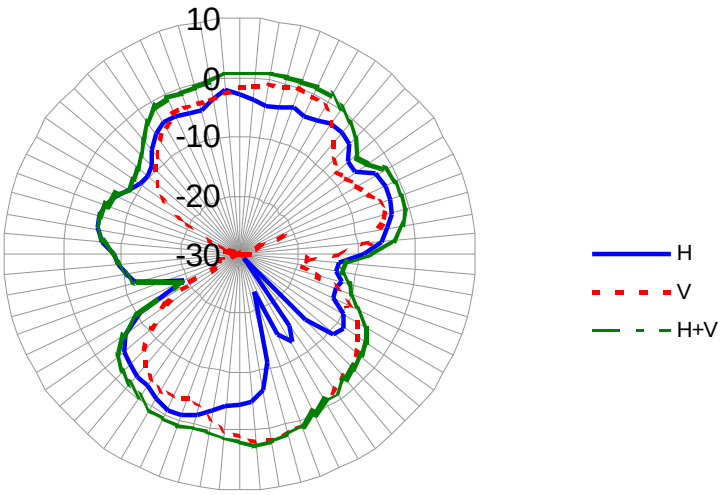

Hori (dBi) ave.	-5.47
Vert (dBi) ave.	-4.15
H+V (dBi) ave.	-1.75
Peak(dBi) **(V)**	1.82
Peak Angle **(Xº=)**	175º
Center Frequency	2450MHz

Note1) The measurement was performed at 3 frequencies (2400, 2450, 2500MHz).
Note2) The maximum antenna gain was found around **175 degree** angle from measuring apparatus in **Vertical** polarization at the middle frequency (2450MHz) of **Tablet operation mode**.

2.2.2 5725-5850MHz radiation characteristic

Main antenna

- Notebook operation mode

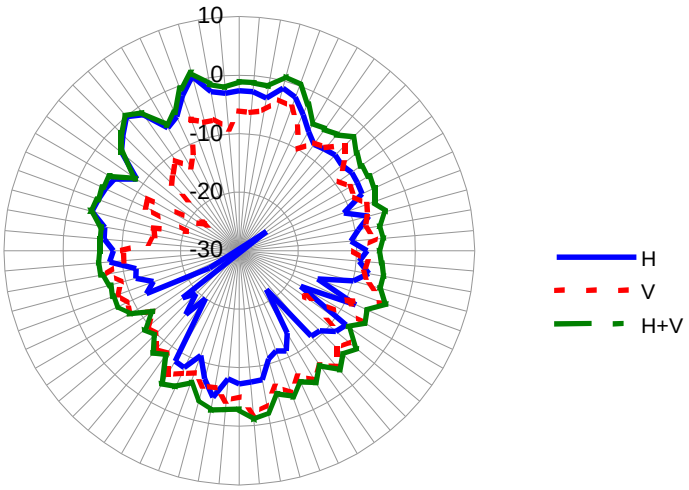

Hori (dBi) ave.	-6.25
Vert (dBi) ave.	-7.32
H+V (dBi) ave.	-3.74
Peak(dBi) **(H)**	0.84
Peak Angle **(Xº=)**	345º
Center Frequency	5800MHz

- Tablet operation mode

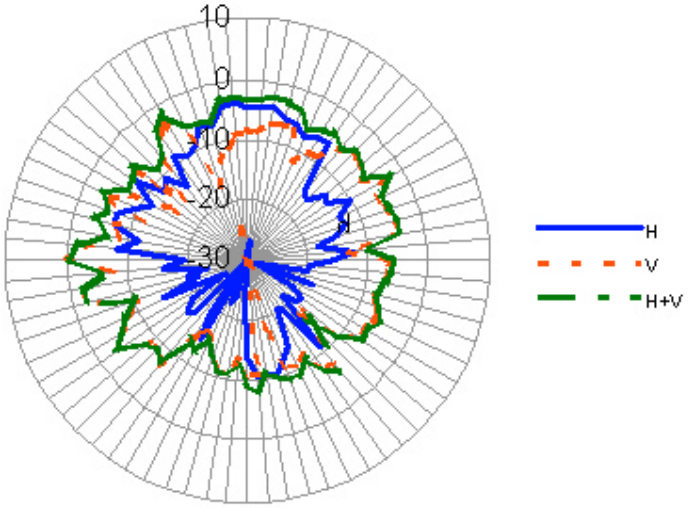

Hori (dBi) ave.	-10.82
Vert (dBi) ave.	-7.43
H+V (dBi) ave.	-5.79
Peak(dBi) **(V)**	-0.35
Peak Angle **(Xº=)**	270
Center Frequency	5750MHz

Note1) The measurement was performed at 4 frequencies (5725, 5750, 5800, 5850MHz).
Note2) The maximum antenna gain was found around **345 degree** angle from measuring apparatus in **Horizontal** polarization at the middle frequency (5800MHz) of **Notebook operation mode**.

Auxiliary antenna

- Notebook operation mode

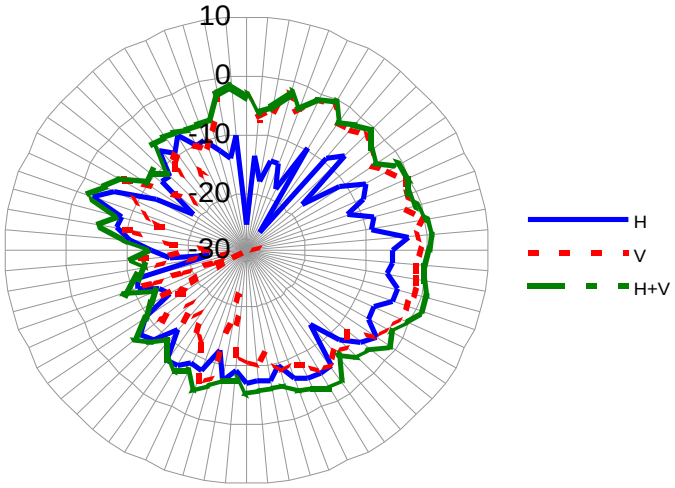

Hori (dBi) ave.	-8.38
Vert (dBi) ave.	-5.51
H+V (dBi) ave.	-3.70
Peak(dBi) **(V)**	-0.28
Peak Angle **(Xº=)**	80º
Center Frequency	5725MHz

- Tablet operation mode

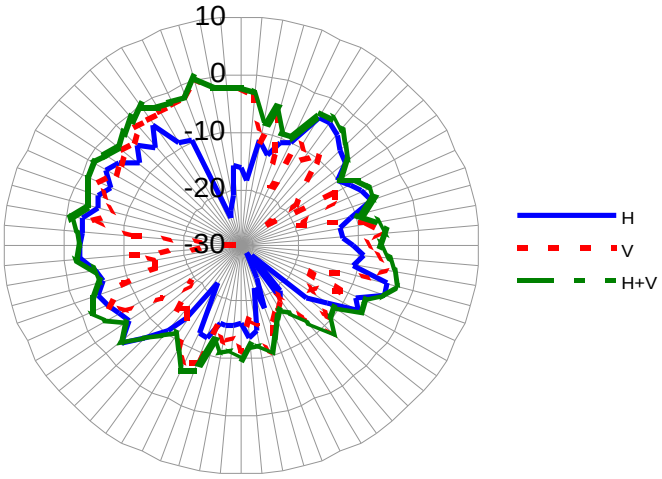

Hori (dBi) ave.	-7.81
Vert (dBi) ave.	-7.53
H+V (dBi) ave.	-4.66
Peak(dBi) **(V)**	0.37
Peak Angle **(Xº=)**	346º
Center Frequency	5725MHz

Note1) The measurement was performed at 4 frequencies (5725, 5750, 5800, 5850MHz).
Note2) The maximum antenna gain was found around **346 degree** angle from measuring apparatus in **Vertical** polarization at the low frequency (5725MHz) of **Tablet operation mode**.

3. Host PC Information

The main antenna, meander (Inverted F) type, is built in the left top edge of LCD and the auxiliary antenna, meander (Inverted F) type, is built in the right upper side of LCD as shown in the Photo. Those diversity antennas are not used simultaneously. One of the antennas is selected automatically or manually to have a good quality of radio communication. The selected antenna performs transmission or receiving in half duplex alternatively.

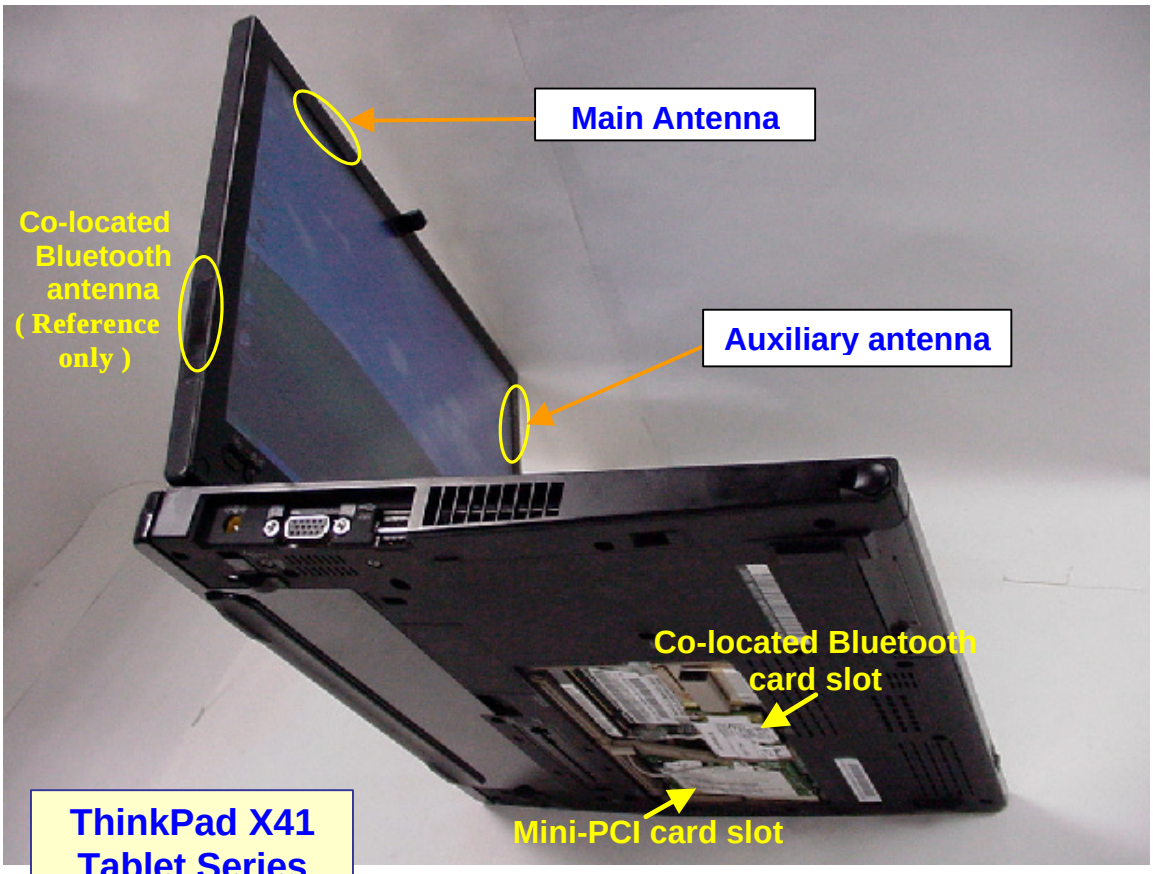

ThinkPad X41 Tablet Series

4. Antenna Locations

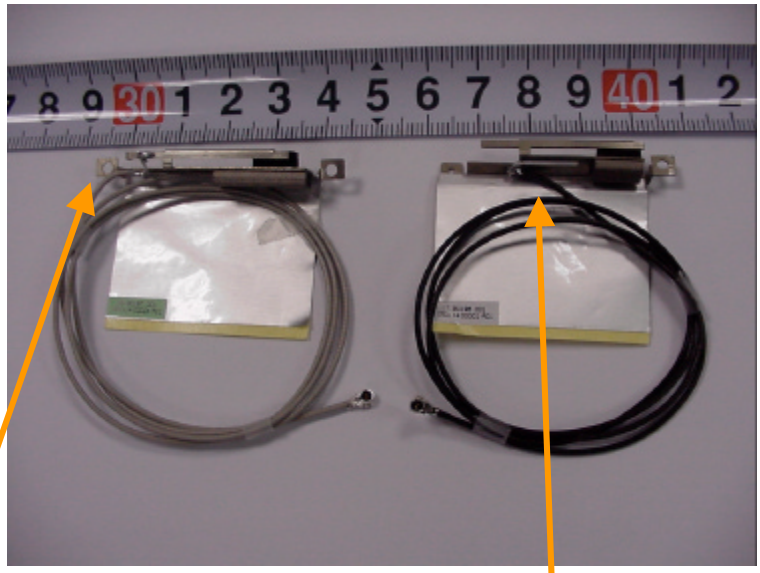

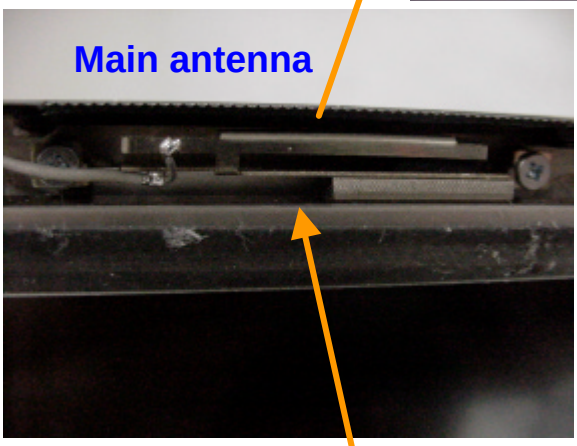

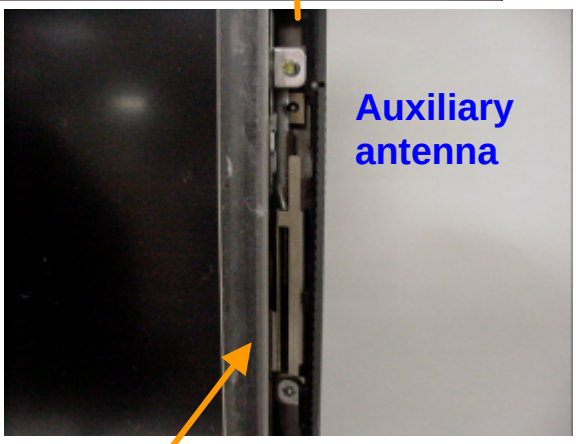

5. Exterior Photos of Antennas

Main Antenna

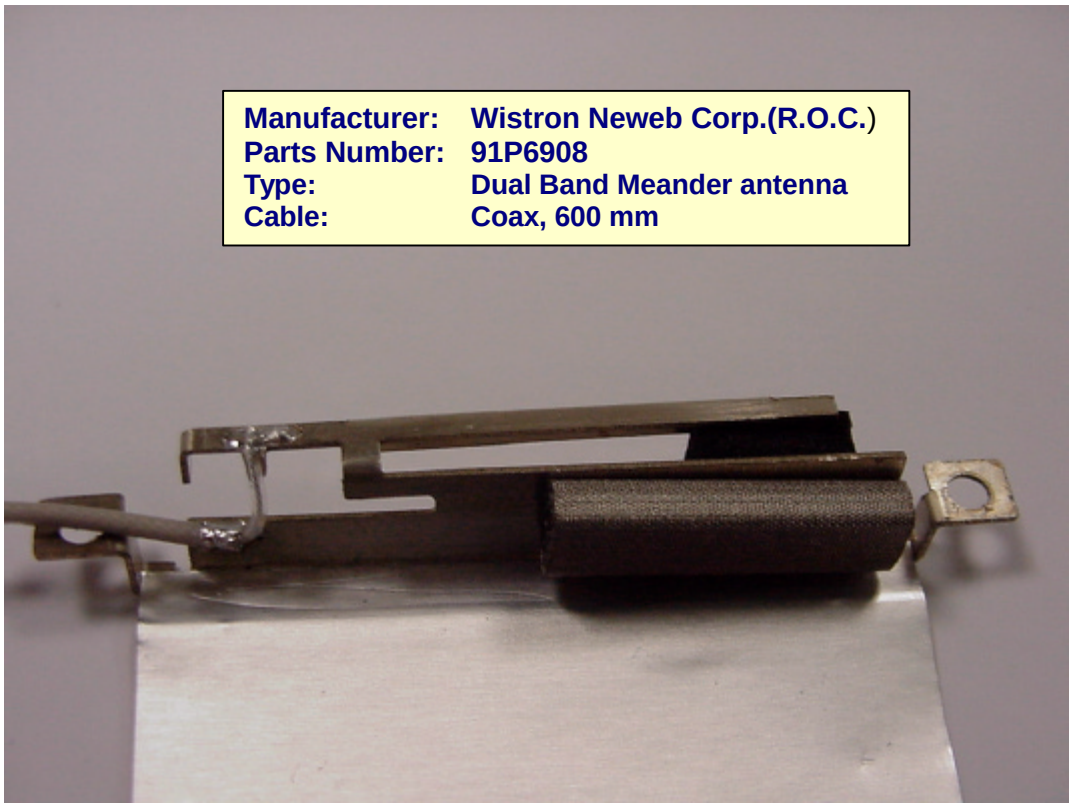
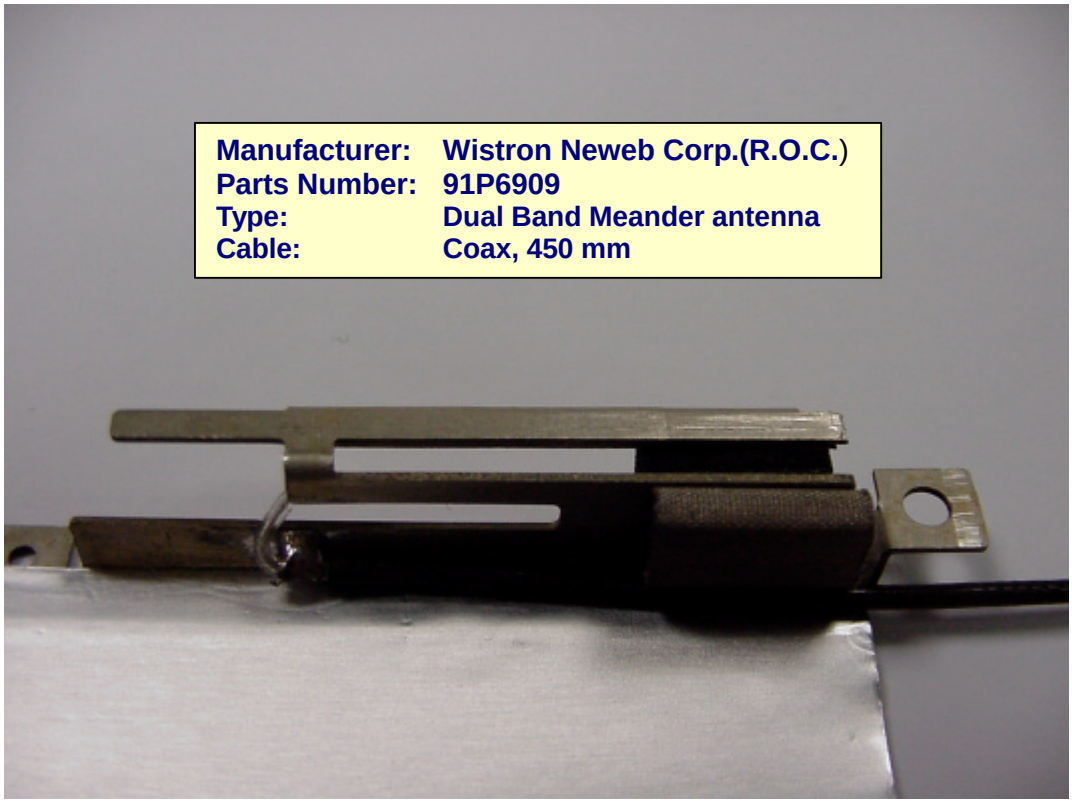
Auxiliary Antenna