SAR TEST REPORT

for

Harman International Industries, Inc.

BLUETOOTH HEADSET

Model No.: ENDURANCE RACE

FCC ID: APIJBLENDRACE

IC: 6132A-JBLENDRACE

The MAX SAR(1g)	
Head SAR(DSS)	0.3107W/Kg
Head SAR(DTS)	0.4161W/Kg

Prepared for : Harman International Industries, Inc.
8500 Balboa Boulevard, Northridge, CA 91329, UNITED STATES

Prepared By : Audix Technology (Shenzhen) Co., Ltd.
No. 6, Kefeng Road, Science & Technology Park,
Nanshan District, Shenzhen, Guangdong, China

Tel: (0755) 26639496
Fax: (0755) 26632877

Report Number : ACS-SF21019

Date of Test : Aug.23, 2021

Date of Report : Aug.25, 2021

TABLE OF CONTENTS

Description Page

Test Report Verification 3

1. GENERAL INFORMATION 4

1.1. Description of Equipment Under Test 4
1.2. Feature of Equipment Under Test 5

2. GENERAL DESCRIPTION 6

2.1. Product Description For EUT 6
2.2. Applied Standards 6
2.3. Device Category and SAR Limits 6
2.4. Test Conditions 6
2.5. Exposure Positions Consideration 7
2.6. Standalone SAR Test Exclusion Considerations 8
2.7. EUT Configuration and operation conditions for test 10
2.8. Test Equipments 10
2.9. Laboratory Environment 11
2.10. Measurement Uncertainty 11

3. MEASURE PROCEDURES 14

3.1. General description of test procedures 14

4. SAR MEASUREMENTS SYSTEM 15

4.1. SAR Measurement Set-up 15
4.2. ELI Phantom 16
4.3. Device Holder for SAM Twin Phantom 17
4.4. DASY5 E-field Probe System 18
4.5. E-field Probe Calibration 19
4.6. Scanning procedure 20

5. DATA STORAGE AND EVALUATION 22

5.1. Data Storage 22
5.2. Data Evaluation by SEMCAD 22

6. SYSTEM CHECK 24

7. TEST RESULTS 26

7.1. Output power 26
7.2. System Check for Head Tissue simulating liquid 28
7.3. Test Results 29

ANNEX A: SYSTEM CHECK RESULTS
ANNEX B: TEST PLOTS
ANNEX C: DASY CABLIBRATION CERTIFICATE
ANNEX D: TEST SETUP PHOTOS

SAR TEST REPORT

Applicant	:	Harman International Industries, Inc.
Product	:	BLUETOOTH HEADSET
FCC ID	:	APIJBLENDRACE
IC	:	6132A-JBLENDRACE
		(A) Model No. : ENDURANCE RACE
		(B) Test Voltage : DC 3.85V (built-in battery)

Measurement Standard Used:

- FCC 47 CFR Part 2 (2.1093)
- IEEE C95.1-1999
- IEEE 1528: 2013
- IEC/IEEE 62209-1528: 2020
- IEC62209-1:2016
- IEC62209-2:2019
- FCC OET Bulletin 65 Supplement C (Edition 01-01)
- RSS-102 ISSUE 5: 2015
- FCC KDB 447498 D01 v06
- FCC KDB 865664 D01/D02

The device described above is tested by Audix Technology (Shenzhen) Co., Ltd. to determine the maximum emission levels emanating from the device and the severe levels of the device can endure and its performance criterion. The test results are contained in this test report and Audix Technology (Shenzhen) Co., Ltd. is assumed full responsibility for the accuracy and completeness of test. This report contains data that are not covered by the NVLAP accreditation. Also, this report shows that the EUT is technically compliant with the FCC and RSS-102 requirements.

This report applies to single evaluation of one sample of above mentioned product. This report shall not be reproduced in part without written approval of Audix Technology (Shenzhen) Co., Ltd.

Date of Test : Aug.23, 2021 Report of date: Aug.25, 2021

Prepared by : Kayli He Reviewed by : Sunny Lu

Kayli He /Assistant Sunny Lu / Deputy Manager

AUDIX ® 信華科技（深圳）有限公司
Audix Technology (Shenzhen) Co., Ltd.
EMC 部門報告專用章
Stamp only for EMC Dept. Report
Signature: David Jin

Approved & Authorized Signer :

David Jin / Deputy General Manager

1. GENERAL INFORMATION

1.1. Description of Equipment Under Test

Applicant	Harman International Industries, Inc. 8500 Balboa Boulevard, Northridge, CA 91329, UNITED STATES
Manufacturer	Harman International Industries, Inc. 8500 Balboa Boulevard, Northridge, CA 91329, UNITED STATES
Product	BLUETOOTH HEADSET
Model No.	ENDURANCE RACE
FCC ID	APIJBLENDRACE
IC	6132A-JBLENDRACE
Sample Type	Prototype production
Date of Receipt	Aug.21, 2021
Date of Test	Aug.23, 2021

1.2. Feature of Equipment Under Test

Product Feature & Specification		
Product	BLUETOOTH HEADSET	
Model No.	ENDURANCE RACE	
FCC ID	APIJBLENDRACE	
IC	6132A-JBLENDRACE	
Radio	Bluetooth BDR+EDR; BLE	
Power Source	☐ Commercial Power	AC 100 ~ 240V
	☒ External Power Source	DC 5V
	☒ Polymer Li-ion battery	DC 3.85V, 70mAh
	☐ UM battery	DC V
Bluetooth		
Frequency Range	2402-2480MHz	
Type of Modulation	GFSK, π/4DQPSK, 8DPSK	
Data Rate	1Mbps, 2Mbps, 3Mbps	
Quantity of Channels	79/40	
Channel Separation	1MHz/2MHz	

Antenna System

Antenna Information	
Type of Antenna	FPC Antenna
Antenna number	1
Antenna Peak Gain	Left: 0.32dBi; Right: 0.45dBi

2. GENERAL DESCRIPTION

2.1. Product Description For EUT

[None]

2.2. Applied Standards

The Specific Absorption Rate (SAR) testing specification, method and procedure for this device is in accordance with the following standards:

·FCC 47 CFR Part 2 (2.1093)
·IEEE C95.1-1999
·IEEE 1528: 2013
·IEC/IEEE 62209-1528: 2020
·IEC62209-1:2016
·IEC62209-2:2019
·FCC OET Bulletin 65 Supplement C (Edition 01-01)
·RSS-102 ISSUE 5: 2015
·FCC KDB 447498 D01 v06
·FCC KDB 865664 D01/D02

2.3. Device Category and SAR Limits

This device belongs to portable device category because its radiating structure is allowed to be used within 20 centimeters of the body of the user. Limit for General Population/Uncontrolled exposure should be applied for this device, it is 1.6 W/kg as averaged over any 1 gram of tissue.

2.4. Test Conditions

2.4.1. **Ambient Condition**

Ambient Temperature	20 to 24 ℃
Humidity	< 60 %

2.4.2. **Test Configuration**

The distance between the EUT and the antenna of the emulator is larger than 50 cm and the output power radiated from the emulator antenna is at least 30dB smaller than the output power of EUT. The EUT was set from the emulator to radiate maximum output power during all tests.

2.5. Exposure Positions Consideration

Left

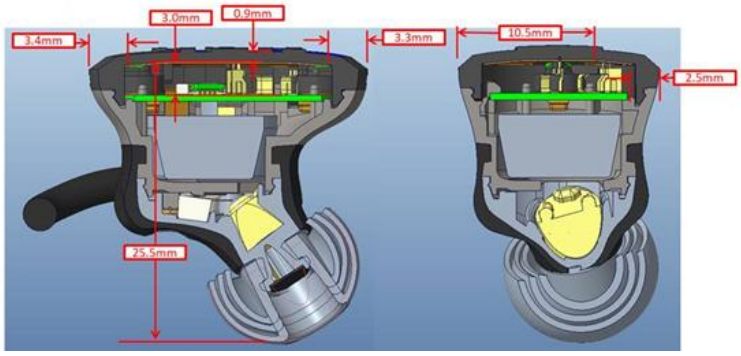

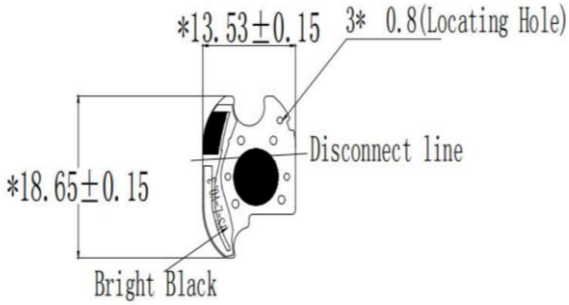

Right

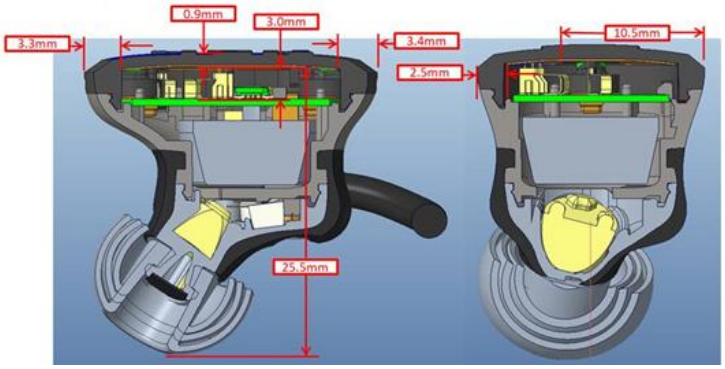

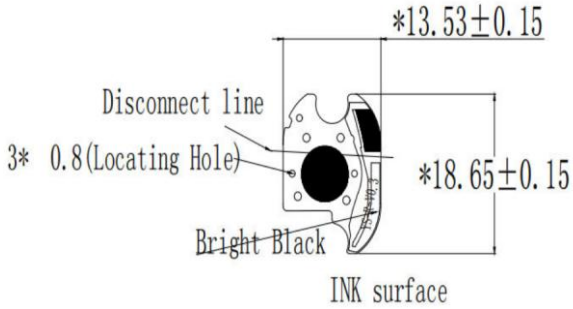

Antenna	Description
antenna	Bluetooth BDR+EDR; BLE

Sides for SAR tests Test distance: 0 mm(Head)						
Spec	Head					
	Top	Front	Cochlea	Bottom	Left	Right
Bluetooth	√	√	√	√	√	√

Note:

The side which has a distance larger than 5cm from antenna can be excluded from SAR measurement.

2.6. Standalone SAR Test Exclusion Considerations

According to RSS-102 Table 1, the SAR test exclusion threshold for 2450MHz at 5mm test separation distances is 4mW.

Frequency (MHz)	Exemption Limits (mW)				
	At separation distance of ≤5 mm	At separation distance of 10 mm	At separation distance of 15 mm	At separation distance of 20 mm	At separation distance of 25 mm
≤300	71 mW	101 mW	132 mW	162 mW	193 mW
450	52 mW	70 mW	88 mW	106 mW	123 mW
835	17 mW	30 mW	42 mW	55 mW	67 mW
1900	7 mW	10 mW	18 mW	34 mW	60 mW
2450	4 mW	7 mW	15 mW	30 mW	52 mW
3500	2 mW	6 mW	16 mW	32 mW	55 mW
5800	1 mW	6 mW	15 mW	27 mW	41 mW

Frequency (MHz)	Exemption Limits (mW)				
	At separation distance of 30 mm	At separation distance of 35 mm	At separation distance of 40 mm	At separation distance of 45 mm	At separation distance of ≥50 mm
≤300	223 mW	254 mW	284 mW	315 mW	345 mW
450	141 mW	159 mW	177 mW	195 mW	213 mW
835	80 mW	92 mW	105 mW	117 mW	130 mW
1900	99 mW	153 mW	225 mW	316 mW	431 mW
2450	83 mW	123 mW	173 mW	235 mW	309 mW
3500	86 mW	124 mW	170 mW	225 mW	290 mW
5800	56 mW	71 mW	85 mW	97 mW	106 mW

Standalone 1-g head or body SAR evaluation by measurement or numerical simulation is not required when the corresponding SAR Exclusion Threshold condition, listed below, is satisfied. The 1-g SAR test exclusion threshold for 100 MHz to 6 GHz at test separation distances ≤ 50 mm are determined by:

[(max. power of channel, including tune-up tolerance, mW) / (min. test separation distance, mm)] { √ f(GHz)] ≤ 3.0 for 1-g SAR, where

- f(GHz) is the RF channel transmit frequency in GHz
- Power and distance are rounded to the nearest mW and mm before calculation
- The result is rounded to one decimal place for comparison

According to the KDB447498 appendix A, the SAR test exclusion threshold for 2450MHz at 5mm test separation distances is 10 mW.

Appendix A

SAR Test Exclusion Thresholds for 100 MHz – 6 GHz and ≤ 50 mm

Approximate SAR Test Exclusion Power Thresholds at Selected Frequencies and Test Separation Distances are illustrated in the following Table.

MHz	5	10	15	20	25	mm
150	39	77	116	155	194	SAR Test Exclusion Threshold (mW)
300	27	55	82	110	137	
450	22	45	67	89	112	
835	16	33	49	66	82	
900	16	32	47	63	79	
1500	12	24	37	49	61	
1900	11	22	33	44	54	
2450	10	19	29	38	48	
3600	8	16	24	32	40	
5200	7	13	20	26	33	
5400	6	13	19	26	32	
5800	6	12	19	25	31	

2.7. EUT Configuration and operation conditions for test.

EUT

(EUT: BLUETOOTH HEADSET)

2.8. Test Equipments

Item	Equipment	Manufacturer	Model No.	Serial No.	Calibration Date	Calibration Due Date	Calibration Body
1.	DASY5 SAR Test System	Speag	TX60 L speag	F09/5B1H1/01	NCR	NCR	N/A
2.	ENA Series Analyzer	Agilent	E5071B	MY42403549	2021.04.08	2022.04.08	CCIC
3.	ENA Series Network Analyzer	Agilent	E5071C	MY46316760	2020.10.10	2021.10.10	CCIC
4.	Power Meter	Anritsu	ML2487A	6K00002472	2021.04.07	2022.04.07	CCIC
5.	Power Sensor	Anritsu	MA2491A	033005	2021.04.06	2022.04.06	CCIC
6.	Signal Generator	Rohde&Schwarz	SMB100A	181375	2021.04.08	2022.04.07	CCIC
7.	Amplifier	Milmega	ZHL-42W	C620601316	NCR	NCR	N/A
8.	Dipole Validation Kits	Speag	D2450V2	862	2020.06.15	2023.06.15	SPEAG
9.	Attenuator	N/A	1527	001	2020.10.10	2021.10.10	CCIC
10.	Date Acquisition Electronics	Speag	DAE4	899	2021.03.23	2022.03.23	CCTL
11.	E-Field Probe	Speag	EX3DV4	3767	2021.04.26	2022.04.26	CCTL
12.	Test Software	Schmid&Partner Englinnering AG	DASY5	52.8.7.1137	NCR	NCR	NCR
13.	Radio Communication Analyzer	ANRITSU	MT8820C	6201091003	2020.10.10	2021.10.10	CCIC
14.	Radio Communication Analyzer	R&S	CMW500	103249	2020.10.10	2021.10.10	CCIC

2.9. Laboratory Environment

Temperature	Min:20℃,Max.25℃
Relative humidity	Min. = 30%, Max. = 70%
Note: Ambient noise is checked and found very low and in compliance with requirement of standards.	

2.10. Measurement Uncertainty

Test Item	Uncertainty
Uncertainty for SAR test	1g: 21.1
	10g: 20.6
Uncertainty for test site temperature and humidity	0.6℃

Source	Type	Uncertainly Value (%)	Probability Distribution	K	C1(1g)	C1(10g)	Standard uncertainty ul(%)1g	Standard uncertainty ul(%)10g	Degree of freedom Veff or Vi
Measurement system repetivity	A	0.5	N	1		1	0.5	0.5	9
Probe calibration	B	5.9	N	1	1	1	5.9	5.9	∞
Isotropy	B	4.7	R	√3	1	1	2.7	2.7	∞
Linearity	B	4.7	R	√3	1	1	2.7	2.7	∞
Probe modulation response	B	0	R	√3	1	1	0	0	∞
Detection limits	B	1.0	R	√3	1	1	0.6	0.6	∞
Boundary effect	B	1.9	R	√3	1	1	1.1	1.1	∞
Readout electronics	B	1.0	N	1	1	1	1.0	1.0	∞
Response time	B	0	R	√3	1	1	0	0	∞
Integration time	B	4.32	R	√3	1	1	2.5	2.5	∞
RF ambient conditions – noise	B	0	R	√3	1	1	0	0	∞
RF ambient conditions – reflections	B	3	R	√3	1	1	1.73	1.73	∞
Probe positioner mech. restrictions	B	0.4	R	√3	1	1	0.2	0.2	∞
Probe positioning with respect to phantom shell	B	2.9	R	√3	1	1	1.7	1.7	∞
Post-processing	B	0	R	√3	1	1	0	0	∞
Test sample related									
Device holder uncertainty	A	2.94	N	1	1	1	2.94	2.94	M-1
Test sample positioning	A	4.1	N	1	1	1	4.1	4.1	M-1
Power scaling	B	5.0	R	√3	1	1	2.9	2.9	∞
Drift of output power (measured SAR drift)	B	5.0	R	√3	1	1	2.9	2.9	∞
Phantom and set-up									
Phantom uncertainty (shape and thickness tolerances)	B	4.0	R	√3	1	1	2.3	2.1	∞
Algorithm for correcting SAR for deviations in permittivity and conductivity	B	1.9	N	1	1	0,84	1,9	1,6	∞
Liquid conductivity (meas.)	A	0.55	N	1	0.78	0.71	0.24	0.21	M-1
Liquid permittivity (meas.)	A	0.19	N	1	0.23	0.26	0.09	0.06	M
Liquid permittivity – temperature uncertainty	A	5.0	R	√3	0,78	0,71	1.4	1.1	∞
Liquid conductivity – temperature uncertainty	A	5.0	R	√3	0.23	0,26	1.2	0.8	∞
Combined standard uncertainty	$u_c' = \sqrt{\sum_{i=1}^{23} c_i^2 u_i^2}$						**10.57**	**10.32**	
Expanded uncertainty (95 % conf. interval)	$u_e = 2u_c$		N		K=2		**21.14**	**20.64**	

The following tissue formulations are provided for reference only as some of the parameters have not been thoroughly verified. The composition of ingredients may be modified accordingly to achieve the desired target tissue parameters required for routine SAR evaluation.

Ingredients (% by weight)	Frequency (MHz)									
	450		835		915		1900		2450	
Tissue Type	Head	Body	Head	Body	Head	Body	Head	Body	Head	Body
Water	38.56	51.16	41.45	52.4	41.05	56.0	54.9	40.4	62.7	73.2
Salt (NaCl)	3.95	1.49	1.45	1.4	1.35	0.76	0.18	0.5	0.5	0.04
Sugar	56.32	46.78	56.0	45.0	56.5	41.76	0.0	58.0	0.0	0.0
HEC	0.98	0.52	1.0	1.0	1.0	1.21	0.0	1.0	0.0	0.0
Bactericide	0.19	0.05	0.1	0.1	0.1	0.27	0.0	0.1	0.0	0.0
Triton X-100	0.0	0.0	0.0	0.0	0.0	0.0	0.0	0.0	36.8	0.0
DGBE	0.0	0.0	0.0	0.0	0.0	0.0	44.92	0.0	0.0	26.7
Dielectric Constant	43.42	58.0	42.54	56.1	42.0	56.8	39.9	54.0	39.8	52.5
Conductivity (S/m)	0.85	0.83	0.91	0.95	1.0	1.07	1.42	1.45	1.88	1.78

Salt: 99+% Pure Sodium Chloride Sugar: 98+% Pure Sucrose
Water: De-ionized, 16 MΩ+ resistivity HEC: Hydroxyethyl Cellulose
DGBE: 99+% Di(ethylene glycol) butyl ether, [2-(2-butoxyethoxy)ethanol]
Triton X-100 (ultra pure): Polyethylene glycol mono [4-(1,1, 3, 3-tetramethylbutyl)phenyl]ether

Simulating Liquids for 5 GHz, Manufactured by SPEAG

Ingredients	(% by weight)
Water	78
Mineral oil	11
Emulsifiers	9
Additives and Salt	2

3. MEASURE PROCEDURES

3.1. General description of test procedures

This is a Bluetooth Headset and it is appropriate for head SAR test, each side of the EUT should be tested. Choose the channel which has the maximum power as the priority test channel, if the test result less than 0.8W/Kg, then other channel can be excluded, otherwise, the channel which has a secondary highest power should be tested instead.

Please apply the following guidance for SAR testing:

1. Please use a 0 mm (touching) test separation distance on the flat phantom during SAR testing of this device. This separation distance is based on the guidance found in FCC KDB Publication 447498 D01, Section 5.2.3 3)
2. Please utilize a head tissue simulating liquid (TSL) of the appropriate frequency during SAR testing.
3. Please use the guidance found in FCC KDB Publication 447498 D01 to determine which sides of the device need to be tested for SAR.

4. SAR MEASUREMENTS SYSTEM

4.1. SAR Measurement Set-up

DASY5 system for performing compliance tests consists of the following items:

(1) A standard high precision 6-axis robot (Stäubli RX family) with controller and software. An arm extension for accommodating the data acquisition electronics (DAE).
(2) A dosimetric probe, i.e. an isotropic E-field probe optimized and calibrated for usage It issue simulating liquid. The probe is equipped with an optical surface detector system.
(3) A data acquisition electronic (DAE) which performs the signal amplification, signal multiplexing, AD-conversion, offset measurements, mechanical surface detection, collision detection, etc. The unit is battery powered with standard or rechargeable batteries. The signal is optically transmitted to the EOC.
(4) A unit to operate the optical surface detector which is connected to the EOC.
(5) The Electro-Optical Coupler (EOC) performs the conversion from the optical into a digital electric signal of the DAE. The EOC is connected to the DASY5 measurement server.
(6) The DASY5 measurement server, which performs all real-time data evaluation for field measurements and surface detection, controls robot movements and handles safety operation. A computer operating Windows 2003.
(7) DASY5 software and SEMCAD data evaluation software.
(8) Remote control with teach panel and additional circuitry for robot safety such as warning lamps, etc.
(9) The generic twin phantom enabling the testing of left-hand and right-hand usage.
(10) The device holder for handheld mobile phones.
(11) Tissue simulating liquid mixed according to the given recipes.
(12) System validation dipoles allowing to validate the proper functioning of the system.

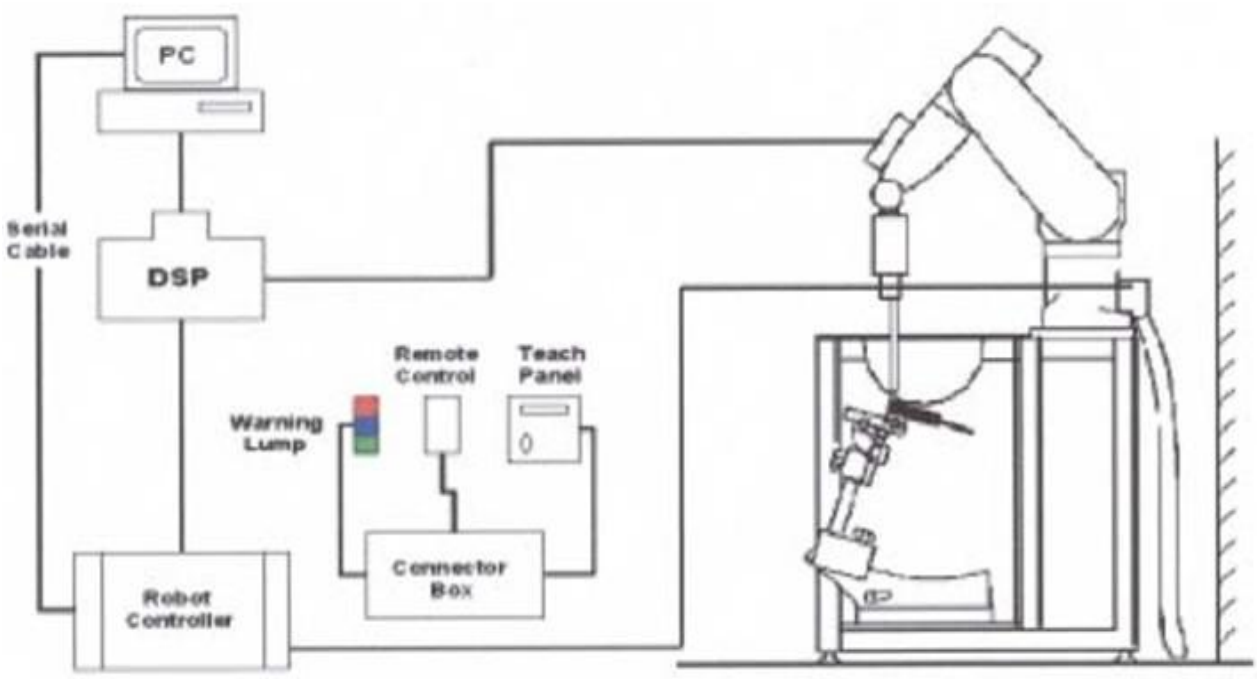

Figure 4.1 SAR Lab Test Measurement Set-up

4.2. ELI Phantom

Phantom for compliance testing of handheld and body-mounted wireless devices in the frequency range of 30 MHz to 6 GHz. ELI is fully compatible with the IEC 62209-2 standard and all known tissue simulating liquids. ELI has been optimized regarding its performance and can be integrated into our standard phantom tables. A cover prevents evaporation of the liquid. Reference markings on the phantom allow installation of the complete setup, including all predefined phantom positions and measurement grids, by teaching three points. The phantom is compatible with all SPEAG dosimetric probes and dipoles.

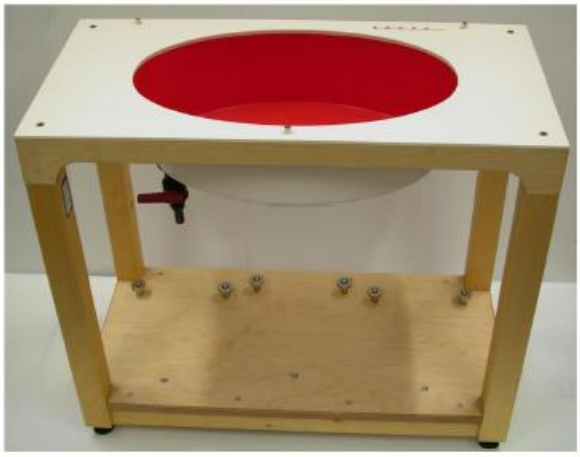

Material	Vinylester, glass fiber reinforced (VE-GF)
Liquid Compatibility	Compatible with all SPEAG tissue simulating liquids (incl. DGBE type)
Shell Thickness	2.0 ±0.2 mm (bottom plate)
Dimensions	Major axis: 600 mm Minor axis: 400 mm
Filling Volume	approx. 30 liters
Wooden Support	SPEAG standard phantom table

The bottom plate contains three pair of bolts for locking the device holder. The device holder positions are adjusted to the standard measurement positions in the three sections.

Figure 6.2 Top View of Twin Phantom

A white cover is provided to tap the phantom during off-periods to prevent water evaporation and changes in the liquid parameters.

On the phantom top, three reference markers are provided to identify the phantom position with respect to the robot.

The phantom can be used with the following tissue simulating liquids:

*Water-sugar based liquid
*Glycol based liquids

4.3. Device Holder for SAM Twin Phantom

The SAR in the Phantom is approximately inversely proportional to the square of the distance between the source and the liquid surface. For a source in 5 mm distance, a positioning uncertainty of ±0.5mm would produce a SAR uncertainty of ±20%. An accurate device position is therefore crucial for accurate and repeatable measurement. The position in which the devices must be measured, are defined by the standards.

The DASY5 device holder is designed to cope with different positions given in the standard. It has two scales for the device rotation (with respect to the body axis) and the device inclination (with respect to the line between the ear reference points). The rotation centers for both scales is the ear reference point (EPR).

Thus the device needs no repositioning when changing the angles.

The DASY5 device holder has been made out of low-loss POM material having the following dielectric parameters: relative permitti ε_r =3 and loss tange δ = 0.02. The amount of dielectric material has been reduced in the closest vicinity of the device, since measurements have suggested that the influence of the clamp on the test results could thus be lowered.

Figure 4.3 Device Holder

4.4. DASY5 E-field Probe System

The SAR measurements were conducted with the dosimetric probe EX3DV4 (manufactured by SPEAG), designed in the classical triangul -ar configuration and optimized for dosimetric evaluation.

Figure 4.4 EX3DV4 E-field Probe

4.4.1. EX3DV4 Probe Specification

Construction	Symmetrical design with triangular core Built-in shielding against static charges PEEK enclosure material (resistant to organic solvents, e.g., DGBE)
Calibration	ISO/IEC 17025 calibration service available
Frequency	10 MHz to > 6 GHz Linearity: ±0.2 dB (30 MHz to 6 GHz)
Directivity	±0.3 dB in HSL (rotation around probe axis) ±0.5 dB in tissue material (rotation normal to probe axis)
Dynamic Range	10 µW/g to > 100 mW/g Linearity: ±0.2dB (noise: typically < 1 µW/g)
Dimensions	Overall length: PRS-T2 mm (Tip: 20 mm) Tip diameter: 2.5 mm (Body: 12 mm) Typical distance from probe tip to dipole centers: 1 mm
Application	High precision dosimetric measurements in any exposure scenario (e.g., very strong gradient fields). Only probe which enables compliance testing for frequencies up to 6 GHz with precision of better 30%.

4.5. E-field Probe Calibration

Each probe is calibrated according to a dosimetric assessment procedure with accuracy better than ±10%. The spherical isotropy was evaluated and found to be better than ±0.25dB. The sensitivity parameters (NormX, NormY, NormZ), the diode compression parameter (DCP) and the conversion factor (ConvF) of the probe are tested.

The free space E-field from amplified probe outputs is determined in a test chamber. This is performed in a TEM cell for frequencies bellow 1 GHz, and in a wave guide above 1 GHz for free space. For the free space calibration, the probe is placed in the volumetric center of the cavity and at the proper orientation with the field. The probe is then rotated 360 degrees.

E-field temperature correlation calibration is performed in a flat phantom filled with the appropriate simulated brain tissue. The measured free space E-field in the medium correlates to temperature rise in a dielectric medium. For temperature correlation calibration a RF transparent thermistor-based temperature probe is used in conjunction with the E-field probe.

$$\mathbf{SAR} = \mathbf{C}\frac{\Delta T}{\Delta t}$$

Where: Δt = Exposure time (30 seconds),
C = Heat capacity of tissue (brain or muscle),
ΔT = Temperature increase due to RF exposure.
Or

$$\mathbf{SAR} = \frac{|E|^2 \sigma}{\rho}$$

Where:
σ = Simulated tissue conductivity,
ρ = Tissue density (kg/m3).

4.6. Scanning procedure

The DASY5 installation includes predefined files with recommended procedures for measurements and validation. They are read-only document files and destined as fully defined but unmeasured masks. All test positions (head or body-worn) are tested with the same configuration of test steps differing only in the grid definition for the different test positions.

The ”reference“ and ”drift“ measurements are located at the beginning and end of the batch process. They measure the field drift at one single point in the liquid over the complete procedure.The indicated drift is mainly the variation of the EUT’s output power and should vary max. ±5 %.

The ”surface check“ measurement tests the optical surface detection system of the DASY5 system by repeatedly detecting the surface with the optical and mechanical surface detector and comparing the results. The output gives the detecting heights of both systems, the difference between the two systems and the standard deviation of the detection repeatability. Air bubbles or refraction in the liquid due to separation of the sugar-water mixture gives poor repeatability (above ±0.1mm). To prevent wrong results tests are only executed when the liquid is free of air bubbles.

The difference between the optical surface detection and the actual surface depends on the Probe and is specified with each probe. (It does not depend on the surface reflectivity or the probe angle to the surface within ±30°.)

Area Scan

The Area Scan is used as a fast scan in two dimensions to find the area of high field values before running a detailed measurement around the hot spot. Before starting the area scan a grid spacing of 15 mm x 15 mm is set. During the scan the distance of the probe to the phantom remains unchanged.

After finishing area scan, the field maxima within a range of 2 dB will be ascertained.

Zoom Scan

Zoom Scans are used to estimate the peak spatial SAR values within a cubic averaging volume containing 1 g and 10 g of simulated tissue. The default Zoom Scan is done by 7x7x7 points within a cube whose base is centered around the maxima found in the preceding area scan.

Spatial Peak Detection

The procedure for spatial peak SAR evaluation has been implemented and can determine values of masses of 1g and 10g, as well as for user-specific masses. The DASY5 system allows evaluations that combine measured data and robot positions, such as:

- ·maximum search
- ·extrapolation
- ·boundary correction
- ·peak search for averaged SAR

During a maximum search, global and local maxima searches are automatically performed in 2-D after each Area Scan measurement with at least 6 measurement points. It is based on the evaluation of the local SAR gradient calculated by the Quadratic Shepard's method. The algorithm will find the global maximum and all local maxima within -2 dB of the global maxima for all SAR distributions.

Extrapolation routines are used to obtain SAR values between the lowest measurement points and the inner phantom surface. The extrapolation distance is determined by the surface detection distance and the probe sensor offset. Several measurements at different distances are necessary for the extrapolation. Extrapolation routines require at least 10 measurement points in 3-D space. They are used in the Zoom Scan to obtain SAR values between the lowest measurement points and the inner phantom surface. The routine uses the modified Quadratic Shepard's method for extrapolation. For a grid using 7x7x7 measurement points with 5mm resolution amounting to 343 measurement points, the uncertainty of the extrapolation routines is less than 1% for 1g and 10g cubes.

A Z-axis scan measures the total SAR value at the x-and y-position of the maximum SAR value found during the cube 7x7x7 scan. The probe is moved away in z-direction from the bottom of the SAM phantom in 5mm steps.

5. DATA STORAGE AND EVALUATION

5.1. Data Storage

The DASY5 software stores the acquired data from the data acquisition electronics as raw data (in microvolt readings from the probe sensors), together with all necessary software parameters for thedata evaluation (probe calibration data, liquid parameters and device frequency and modulation data) in measurement files with the extension ".DA4". The software evaluates the desired unit and format for output each time the data is visualized or exported. This allows verification of the complete software setup even after the measurement and allows correction of incorrect parameter settings. For example, if a measurement has been performed with a wrong crest factor parameter in the device setup, the parameter can be corrected afterwards and the data can be re-evaluated.

The measured data can be visualized or exported in different units or formats, depending on the selected probe type ([V/m], [A/m], [℃], [mW/g], [mW/cm³], [dBrel], etc.). Some of these units are not available in certain situations or show meaningless results, e.g., a SAR output in a lossless media will always be zero. Raw data can also be exported to perform the evaluation with other software packages.

5.2. Data Evaluation by SEMCAD

The SEMCAD software automatically executes the following procedures to calculate the field units from the microvolt readings at the probe connector. The parameters used in the evaluation are stored in the configuration modules of the software:

Probe parameters:	- Sensitivity	Normi, ai0, ai1, ai2
	- Conversion factor	ConvFi
	- Diode compression point	Dcpi
Device parameters:	- Frequency	f
	- Crest factor	cf
Media parameters:	- Conductivity	
	- Density	

These parameters must be set correctly in the software. They can be found in the component documents or they can be imported into the software from the configuration files issued for the DASY5 components. In the direct measuring mode of the multimeter option, the parameters of the actual system setup are used. In the scan visualization and export modes, the parameters stored in the corresponding document files are used.

The first step of the evaluation is a linearization of the filtered input signal to account for the compression characteristics of the detector diode. The compensation depends on the input signal, the diode type and the DC-transmission factor from the diode to the evaluation electronics.

If the exciting field is pulsed, the crest factor of the signal must be known to correctly compensate for peak power. The formula for each channel can be given as:

$$Vi = Ui + Ui2 \cdot cf / dcpi$$

With ***Vi*** = compensated signal of channel i (i = x, y, z)

Ui = input signal of channel i (i = x, y, z)

cf = crest factor of exciting field (DASY parameter)

dcpi = diode compression point (DASY parameter)

From the compensated input signals the primary field data for each channel can be evaluated:

E-field probes: ***Ei = (Vi / Normi ·ConvF)1/2***

H-field probes: ***Hi = (Vi)1/2 ·(ai0 + ai1 f + ai2f2) / f***

With ***Vi*** = compensated signal of channel i (i = x, y, z)

Normi = sensor sensitivity of channel i (i = x, y, z)

ConvF = sensitivity enhancement in solution

aij = sensor sensitivity factors for H-field probes

f = carrier frequency [GHz]

Ei = electric field strength of channel i in V/m

Hi = magnetic field strength of channel i in A/m

The RSS value of the field components gives the total field strength (Hermitian magnitude):

Etot = (Ex2+ EY2+ Ez2)1/2

The primary field data are used to calculate the derived field units.

SAR = (Etot2 ·) / (·1000)

with

SAR = local specific absorption rate in mW/g

Etot = total field strength in V/m

= conductivity in [mho/m] or [Siemens/m]

= equivalent tissue density in g/cm3

Note that the density is normally set to 1 (or 1.06), to account for actual brain density rather than the density of the simulation liquid. The power flow density is calculated assuming the excitation field to be a free space field.

Ppwe = *Etot2 / 3770* or ***Ppwe = Htot2 ·37.7***

with ***Ppwe*** = equivalent power density of a plane wave in mW/cm2

Etot = total electric field strength in V/m

Htot = total magnetic field strength in A/m

6. SYSTEM CHECK

The manufacturer calibrates the probes annually. Dielectric parameters of the tissue simulates were measured every day using the dielectric probe kit and the network analyzer. A system check measurement was made following the determination of the dielectric parameters of the simulates, using the dipole validation kit. A power level of 250 mW was supplied to the dipole antenna, which was placed under the flat section of the twin SAM phantom. The system check results (dielectric parameters and SAR values) are given in the ANNEX A.

System check results have to be equal or near the values determined during dipole calibration with the relevant liquids and test system (±10 %).

System check is performed regularly on all frequency bands where tests are performed with the DASY5 system.

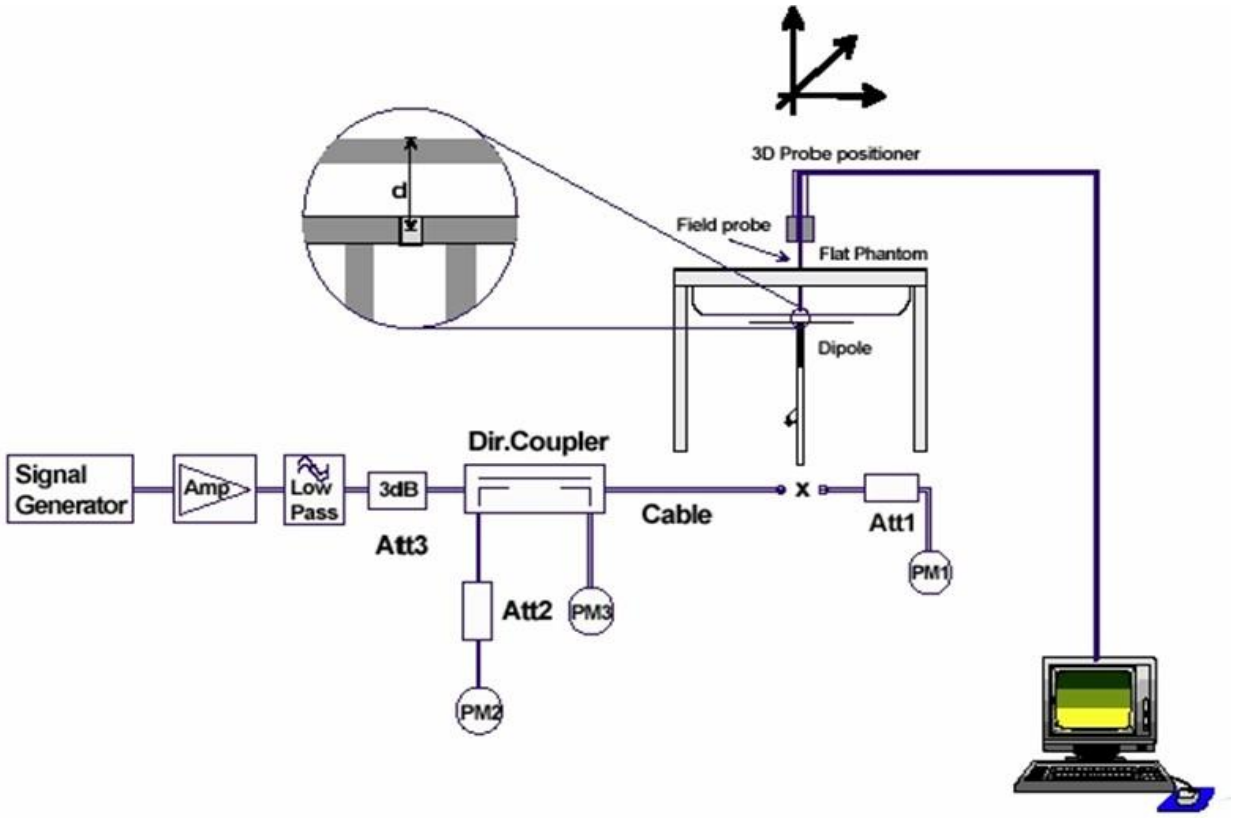

Figure 6.1: System Check Set-up

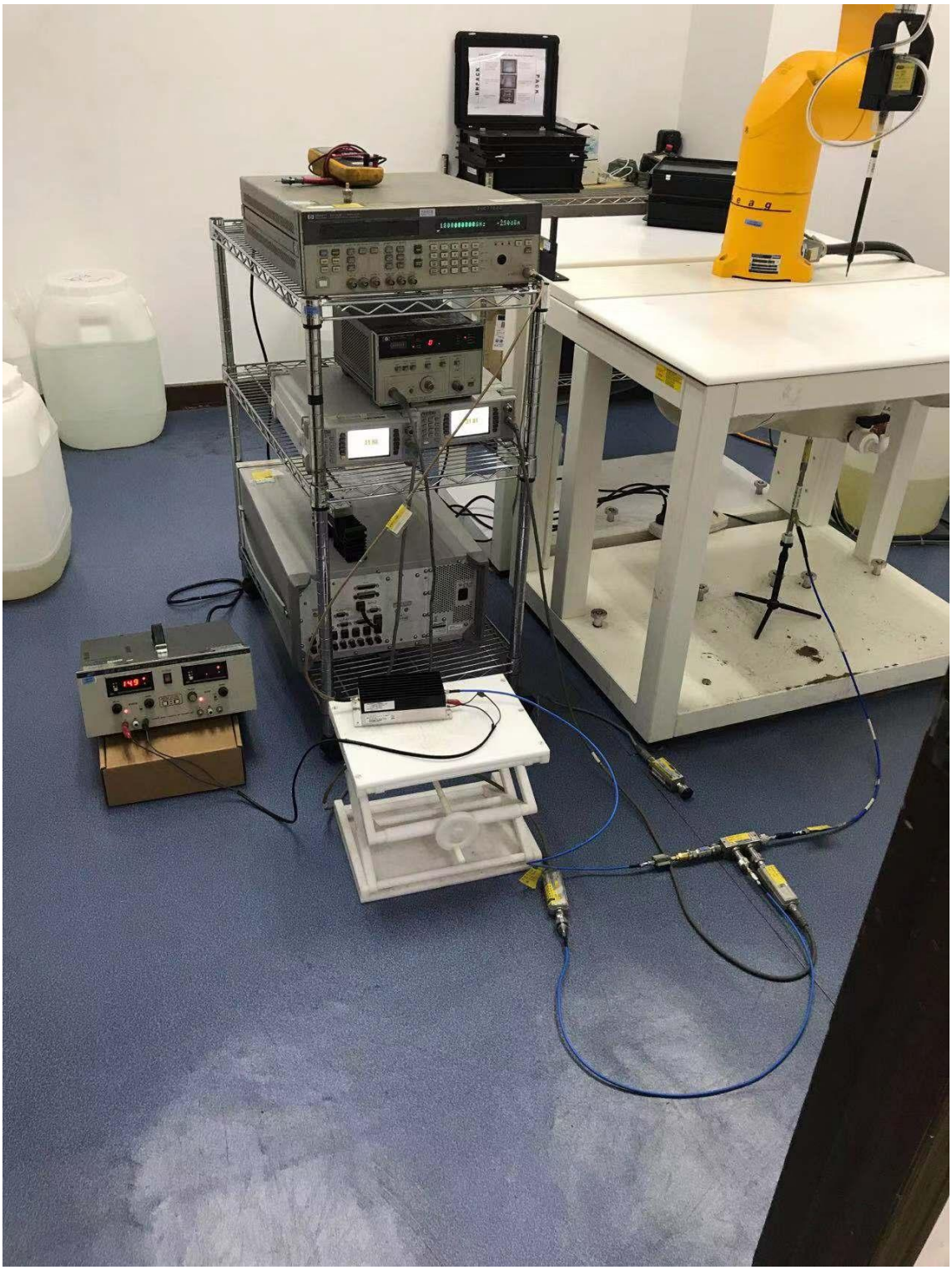

Figure 6.3: photos of system

7. TEST RESULTS

7.1. Output power

Left:
(Bluetooth BDR+EDR)

Test Mode	Frequency (MHz)	Average conducted output power (dBm)	Duty Cycle (%)	Maximum Tune-up Power (dBm)
DH5	2402	5.68	58.00	7.0
DH5	2441	5.84		7.0
DH5	2480	6.35		7.0
2DH5	2402	5.85	57.88	7.0
2DH5	2441	5.90		7.0
2DH5	2480	6.39		7.0
3DH5	2402	5.88	58.00	7.0
3DH5	2441	5.93		7.0
3DH5	2480	6.46		7.0

(BLE)

Test Mode	Frequency (MHz)	Average conducted output power (dBm)	Duty Cycle (%)	Maximum Tune-up Power (dBm)
GFSK	2402	6.70	65.38	7.5
	2440	6.49		7.5
	2480	7.08		7.5

Note: Use the data rate with the maximum output level for the SAR test.

Right:
(Bluetooth BDR+EDR)

Test Mode	Frequency (MHz)	Average conducted output power (dBm)	Duty Cycle (%)	Maximum Tune-up Power (dBm)
DH5	2402	5.49	57.49	7.0
DH5	2441	6.26		7.0
DH5	2480	6.56		7.0
2DH5	2402	5.51	58.48	7.0
2DH5	2441	6.29		7.0
2DH5	2480	6.61		7.0
3DH5	2402	5.50	58.20	7.0
3DH5	2441	6.31		7.0
3DH5	2480	6.64		7.0

(BLE)

Test Mode	Frequency (MHz)	Average conducted output power (dBm)	Duty Cycle (%)	Maximum Tune-up Power (dBm)
GFSK	2402	6.6	66.03	8.0
	2440	7.28	64.51	8.0
	2480	7.56	63.03	8.0

Note: Use the data rate with the maximum output level for the SAR test.

7.2. System Check for Head Tissue simulating liquid

Frequency	Description	SAR(W/kg) (±10% window)		Dielectric Parameters (±10% window)		Temp
		1g	10g	εr	σ(s/m)	℃
2450MHz	Recommended value	52.70 47.43 – 57.97	24.20 21.78 – 26.62	39.20 35.28 – 43.12	1.80 1.62 – 1.98	/
	Measurement value **2021-08-23**	47.6	22.92	39.15	1.81	**20.01**

Note: Recommended Values used derive from the calibration certificate and 250mW is used as feeding power to the calibrated dipole.

7.3. Test Results

Frequency		Dielectric Parameters (±10% window)			
		εr		σ(s/m)	
		Measurement value	Recommended value	Measurement value	Recommended value
2450MHz (BDR+EDR)	2402MHz	38.913 -0.73%	39.2	1.828 1.56%	1.80
	2441MHz	38.734 -1.19%		1.878 4.33%	
	2480MHz	38.579 -1.58%		1.917 6.50%	
2450MHz (BLE)	2402MHz	38.913 -0.73%	39.2	1.828 1.56%	1.80
	2440MHz	38.738 -1.18%		1.876 4.22%	
	2480MHz	38.579 -1.58%		1.917 6.50%	

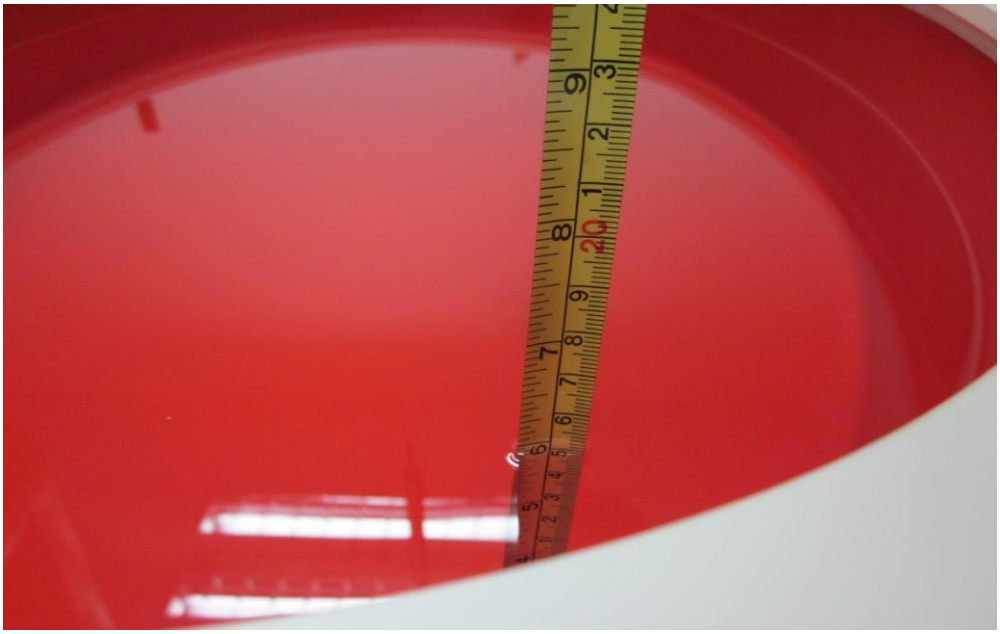

Figure 4.4: Liquid depth in the Flat Phantom

Left:

Spec.	Freq.	Test Position	Output Power		Measured Results		Scaled-1		Scaled-Final		Power Drift (dB)
			Maximum Tune-up Power (dBm)	Measured AV Power (dBm)	SAR1g (W/kg)	SAR10g (W/kg)	SAR1g (W/kg)	SAR10g (W/kg)	SAR1g (W/kg)	SAR10g (W/kg)	
BDR+EDR	2402	Front	7.00	5.88	0.115	0.043	0.1488	0.056	0.2566	0.0959	0.12
	2441	Front	7.00	5.93	0.111	0.43	0.1420	0.550	0.2448	0.9485	0.14
	2480	Top	7.00	6.46	0.092	0.033	0.1042	0.0374	0.1796	0.0644	0.17
		Right			0.056	0.023	0.0634	0.026	0.1093	0.0449	0.07
		Left			0.024	0.00988	0.0272	0.011	0.0469	0.0193	0.15
		Front			0.105	0.033	0.1189	0.037	0.2050	0.0644	0.19
		Cochlea			0.011	0.00489	0.0125	0.006	0.0215	0.0095	0.01
		Bottom			0.070	0.031	0.0793	0.035	0.1367	0.0605	-0.15
BLE	2402	Front	7.50	6.70	0.179	0.092	0.2152	0.111	0.3292	0.1692	0.16
	2440	Front	7.50	6.49	0.175	0.097	0.2208	0.122	0.3377	0.1872	0.14
	2480	Top	7.50	7.08	0.132	0.091	0.1454	0.1002	0.2224	0.1533	-0.12
		Right			0.100	0.038	0.1102	0.042	0.1685	0.0640	0.13
		Left			0.038	0.017	0.0419	0.019	0.0640	0.0286	0.11
		Front			0.187	0.102	0.2060	0.112	0.3151	0.1719	0.20
		Cochlea			0.106	0.054	0.1168	0.059	0.1786	0.0910	0.13
		Bottom			0.068	0.029	0.0749	0.032	0.1146	0.0489	-0.16
Conclusion: PASS											

Note :
Factor= Max. Scaled AV Power(W)/Measured Power(W)
Scaled SAR-1= Measured SAR*Factor
Scaled-Final= Scaled SAR-1*(1/Duty Cycle)
The Max. Reported SAR : **0.3377W/kg for 1g SAR**

Right:

Spec.	Freq.	Test Position	Output Power		Measured Results		Scaled-1		Scaled-Final		Power Drift (dB)
			Maximum Tune-up Power (dBm)	Measured AV Power (dBm)	SAR1g (W/kg)	SAR10g (W/kg)	SAR1g (W/kg)	SAR10g (W/kg)	SAR1g (W/kg)	SAR10g (W/kg)	
BDR+EDR	2402	Front	7.00	5.50	0.128	0.042	0.1808	0.059	0.3107	0.1019	-0.09
	2441	Front	7.00	6.31	0.125	0.043	0.1465	0.050	0.2518	0.0866	-0.16
	2480	Top	7.00	6.64	0.097	0.034	0.1054	0.0369	0.1811	0.0635	-0.05
		Right			0.068	0.025	0.0739	0.027	0.1269	0.0467	0.16
		Left			0.065	0.026	0.0706	0.028	0.1213	0.0485	-0.11
		Front			0.123	0.045	0.1336	0.049	0.2296	0.0840	-0.18
		Cochlea			0.015	0.00612	0.0163	0.007	0.0280	0.0114	0.12
		Bottom			0.057	0.024	0.0619	0.026	0.1064	0.0448	0.14
BLE	2402	Front	8.00	7.28	0.138	0.040	0.1629	0.047	0.2467	0.0715	0.12
	2440	Front	8.00	7.56	0.137	0.041	0.1516	0.045	0.2350	0.0703	0.11
	2480	Top	8.00	6.60	0.092	0.033	0.1270	0.0456	0.2015	0.0723	-0.13
		Right			0.072	0.039	0.0994	0.054	0.1577	0.0854	-0.15
		Left			0.078	0.031	0.1077	0.043	0.1708	0.0679	0.13
		Front			0.140	0.042	0.1933	0.058	0.3066	0.0920	-0.08
		Cochlea			0.19	0.00983	0.2623	0.014	0.4161	0.0215	-0.13
		Bottom			0.045	0.019	0.0621	0.026	0.0986	0.0416	-0.10
Conclusion: PASS											

Note :
Factor= Max. Scaled AV Power(W)/Measured Power(W)
Scaled SAR-1= Measured SAR*Factor
Scaled-Final= Scaled SAR-1*(1/Duty Cycle)
The Max. Reported SAR : **0.4161W/kg for 1g SAR**