SPECIFICATION

Daxian Communication Technology Limited

深圳市大显科技有限公司

Shenzhen Daxian Technology Co., Ltd.

国光 Ultimate BT 天线组件

GGEC Ultimate BT Antenna assembly

产 品 规 格 书

Product Specification

客 户 connection	国光 GGEC	频 段 frequency range	2400 ~ 2500MHz
项目名称 entry name	Ultimate	版 本 edition	V04
物料编号 Material No	1t-imate-106	颜 色 Color	蓝色+黑色 Blue+Black
客户料号 Customer Item Number	**EAN00313**		
R F 设计 R F Design	沈 川 Chuan.Shen	结构设计 Structural Design	闭业智 YeZhi.Bi
品质经理 Quality Manager	胡子寅 Ziyin.Hu	技术总监 Technical Director	张 磊 Lei.Zhang
日 期 Date	2023-02-27		

客户确认：
Customer confirmation:

装配是否符合贵司要求：☐OK ☐NG
Whether the assembly meets your company's requirements：☐OK ☐NG

深圳市大显科技有限公司	Shenzhen Topant Technology Co., Ltd.
深圳市龙岗区布吉镇吉华路 513 号上水径村（国防培训基地对面）达成工业园综合楼 7 楼 TEL:0755-28576002 FAX:0755-84276383 上海分部：上海市张江高科技园区集成电路产业区龙东大道 3000 号 8 号楼 201 室 TEL:021-61630552 FAX:755-84276383	Buji Town, Longgang District, Shenzhen, China Jihua Road 513, Shangshuijing Village (opposite the national defense training base) Dacheng Industrial Park, Building 7。 TEL:0755-28576002 FAX:0755-84276383 Room201, Building8, LongDongRoad3000#, Semiconductor Industry Park, ZhangJiang Hitech Zone, ShangHai TEL:021-61630552 FAX:755-84276383

变更履历
Revision history

版本号 Version number	变更内容 Change content	变更理由 Reason for change	发起变更方 Originating Party	日期 Date	修改人 Modified by
V1.0	创建 found			2023-02-27	
V1.1					

www.Topant.com.cn
Confidentiality requirements
Shenzhen Daxian Technology Co., Ltd. already possesses the information provided by the proprietary technology, which should be strictly confidential and not allowed to be disclosed to any person or company without the prior written consent of Shenzhen Daxian Technology Co., Ltd

索　引
Indexes

一、项目说明 Project Description.....4

二、 BT 天线 antenna.....4

1、 规格 specifications.....4

1.1 电气规格标准 Electrical specifications and standards.....5

1.1.1 电性能指标 Electrical performance index.....5

1.1.2 天线位置布局 Antenna Location Layout.....5

1.2 结构规格标准 Structural specifications and standards.....6

1.2.1 天线组成 Antenna composition.....6

2、测试环境 testing environment.....6

3、测试 test.....7

3.1 驻波(VSWR)的测试 Test of standing wave (VSWR).....7

3.1.1 测试连接 Test connection.....7

3.2 效率、功率（TRP）、灵敏度（TIS）的测试 Testing of efficiency, power (TRP), sensitivity (TIS).....7

3.2.1 测试的场地 Test site.....7

3.2.2 测试的仪表 Tested Instruments.....7

3.2.3 测试数据 test data.....7-8

4、VSWR 参数图 Parameter diagram.....8

5-5.1、无源场型图 Passive field pattern diagram.....9

6、暗室 3D 辐射图轴的定义 Definition of the axis of the darkroom 3D radiation map.....10

7、天线隔离度 antenna isolation.....11

8-8.1、户外拉距测试 Outdoor Pull distance test.....12-13

9、哈曼 RF 衰减实验室测试数据 Harman RF Attenuation Laboratory Test Data.....14

10、结论 conclusion.....14

三、工程图 schedule drawing.....15

Confidentiality requirements

Shenzhen Daxian Technology Co., Ltd. already possesses the information provided by the proprietary technology, which should be strictly confidential and not allowed to be disclosed to any person or company without the prior written consent of Shenzhen Daxian Technology Co., Ltd

一 项目说明 Project Description

客 户 名： **Customer Name:**	国光 GGEC
整机类型： **Type of complete machine:**	音箱 loudspeaker box
天线频段： **Antenna band:**	2400 ~ 2500MHz
天线形式： **Antenna form:**	FPC+同轴线+线材海绵+EVA 泡棉 FPC+coaxial line+wire sponge
馈电形式： **Feed form:**	焊接 weld
馈脚数量： **Number of feed legs:**	两个 Two
硬件版本： **Hardware version:**	/

二 BT 天线组件 Antenna assembly

1 规格 specifications

本报告主要提供 Ultimate 项目天线的各项电气和结构性能参数的测试状况。下图为大显设计的天线图片。

This report mainly provides the testing status of various electrical and structural performance parameters of the antenna for the Ultimate project. The following image shows an antenna with a large display design.

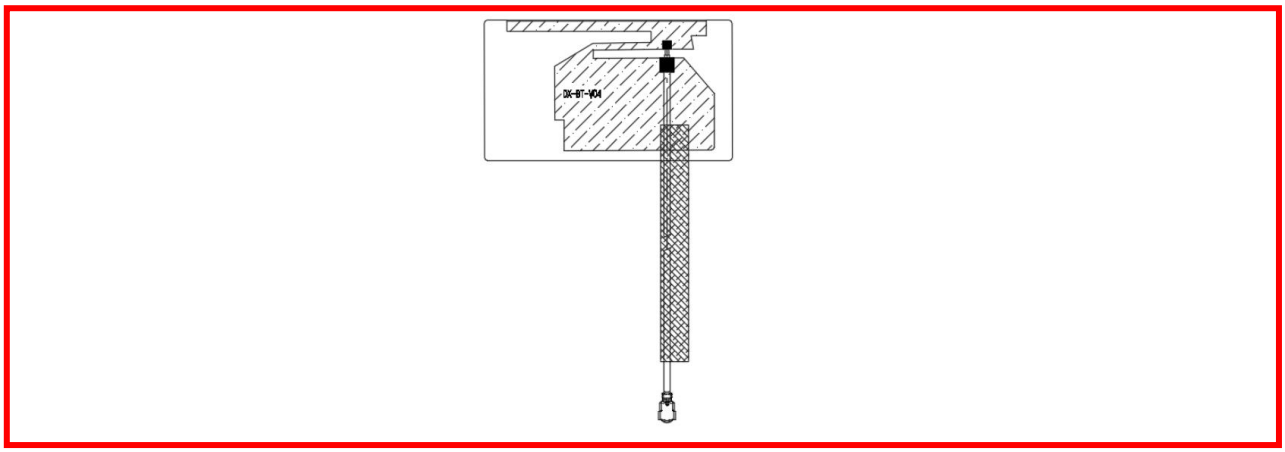

天线外观图

antenna appearing diagram

Confidentiality requirements

Shenzhen Daxian Technology Co., Ltd. already possesses the information provided by the proprietary technology, which should be strictly confidential and not allowed to be disclosed to any person or company without the prior written consent of Shenzhen Daxian Technology Co., Ltd

1.1 电气规格标准 Electrical specifications and standards

1.1.1 电性能指标 Electrical performance index

天线工作频段在 **2400 ~ 2500 MHz。** 下表是大显设计和量产天线的电性能的指标.

The operating frequency band of the antenna is between 2400 and 2500 MHz. The following table shows the electrical performance indicators of large display design and mass production antennas.

Frequency Range	Frequency (MHz)	VSWR
BT	**2400 ~ 2500**	**≤ 2**

Confidentiality requirements

Shenzhen Daxian Technology Co., Ltd. already possesses the information provided by the proprietary technology, which should be strictly confidential and not allowed to be disclosed to any person or company without the prior written consent of Shenzhen Daxian Technology Co., Ltd

2 结构规格标准 Structural specifications and standards

1.2.1 天线组成 Antenna composition

天线主要是由 FPC+同轴线+线材海绵+EVA 泡棉 组成。
The antenna is mainly composed of FPC+coaxial line+wire sponge+EVA foam.

2、 测试设备 The Equipment of Active Test

Satimo 3D Chamber　6×4×4(m)

Agilent 8960 E5515c

Network analyzer-R&S ZVL

图 2

Figure 2

Confidentiality requirements
Shenzhen Daxian Technology Co., Ltd. already possesses the information provided by the proprietary technology, which should be strictly confidential and not allowed to be disclosed to any person or company without the prior written consent of Shenzhen Daxian Technology Co., Ltd

3 测试 test

3.1 驻波(VSWR)的测试 Test of standing wave (VSWR)

3.1.1 测试连接：VSWR 测试装置依次的连接为：R&S ZVL 网络分析仪→测试线→测试治

Test connection: The VSWR test device is sequentially connected as follows: R&S ZVL network analyzer → test line → test fixture

实测(附图)Actual measurement (attached drawing)

3.2 增益及效率、功率（TRP）、灵敏度（TIS）的测试

Gain and efficiency, power (TRP), sensitivity (TIS) testing

3.2.1 测试的场地 Test site：

大显微波暗室 。测试频率范围为 400MHz—6GHz，静区范围为 50cm 周圆，反射率小于-50 dB。

Large display microwave anechoic chamber. The test frequency range is 400MHz - 6GHz, the static zone range is 50cm circumferential, and the reflectivity is less than - 50dB.

3.2.2 测试的仪表 Tested Instruments：

R&S ZVL 网络分析仪、Agilent8960 E5515C、标准喇叭天线、法国 SATIMO-SG24SYSTEM 系统、打印机等。

R&S ZVL network analyzer, Agilent 8960 E5515C, standard horn antenna, French SATIMO-SG24SYSTEM system, printer, etc.

3.2.3 测试数据 ：在微波暗室中，测试的功率和灵敏度相关的数值如下表

Test data: In a microwave anechoic chamber, the values related to the power and sensitivity tested are shown in the table bel

OTA 有源测试 OTA Active Test：

Band	CH	TPR	TIS
BT	0	7.13	-87.64
	36	7.47	-87.87
	78	7.24	-87.52

www.Topant.com.cn
Confidentiality requirements
Shenzhen Daxian Technology Co., Ltd. already possesses the information provided by the proprietary technology, which should be strictly confidential and not allowed to be disclosed to any person or company without the prior written consent of Shenzhen Daxian Technology Co., Ltd

无源效率&增益 Passive efficiency&gain：

Freq (MHz)	Effi (%)	Effi (dB)	Gain (dBi)
2400	40.39	-3.94	1.22
2410	41.23	-3.85	1.15
2420	41.14	-3.86	1.29
2430	41.76	-3.79	1.50
2440	41.41	-3.83	1.49
2450	42.65	-3.70	1.17
2460	42.48	-3.72	1.25
2470	41.74	-3.79	1.28
2480	41.26	-3.84	1.69
2490	40.78	-3.90	1.18
2500	40.24	-3.95	1.60

4、VSWR 参数图 VSWR parameter diagram

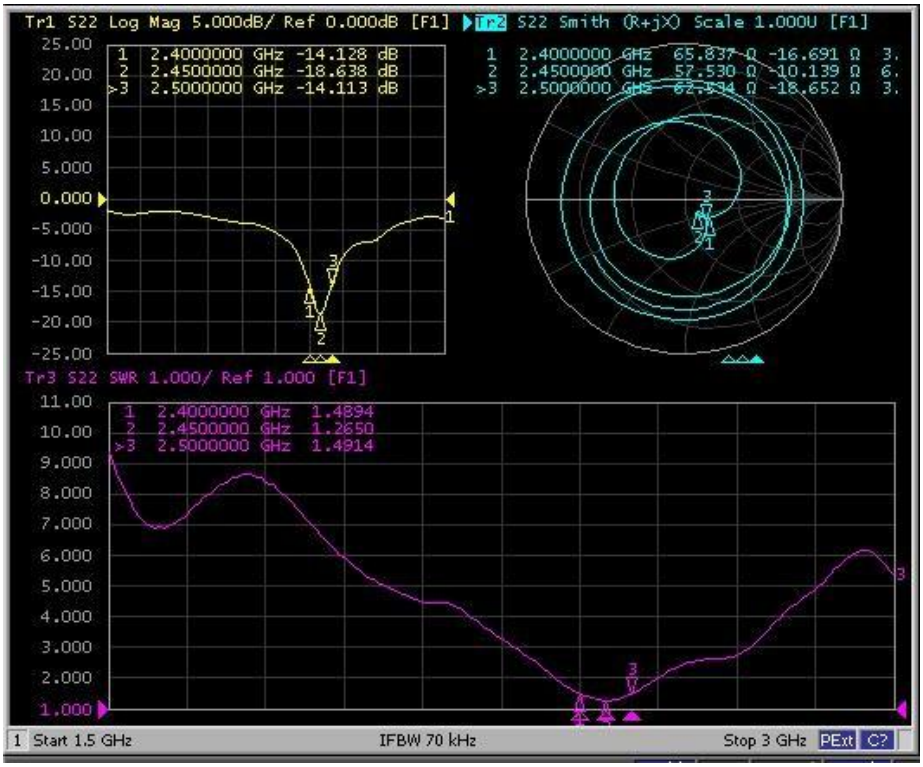

Confidentiality requirements

Shenzhen Daxian Technology Co., Ltd. already possesses the information provided by the proprietary technology, which should be strictly confidential and not allowed to be disclosed to any person or company without the prior written consent of Shenzhen Daxian Technology Co., Ltd

5、无源场型图-2450MHz

Passive Field Pattern Diagram - 2450MHz

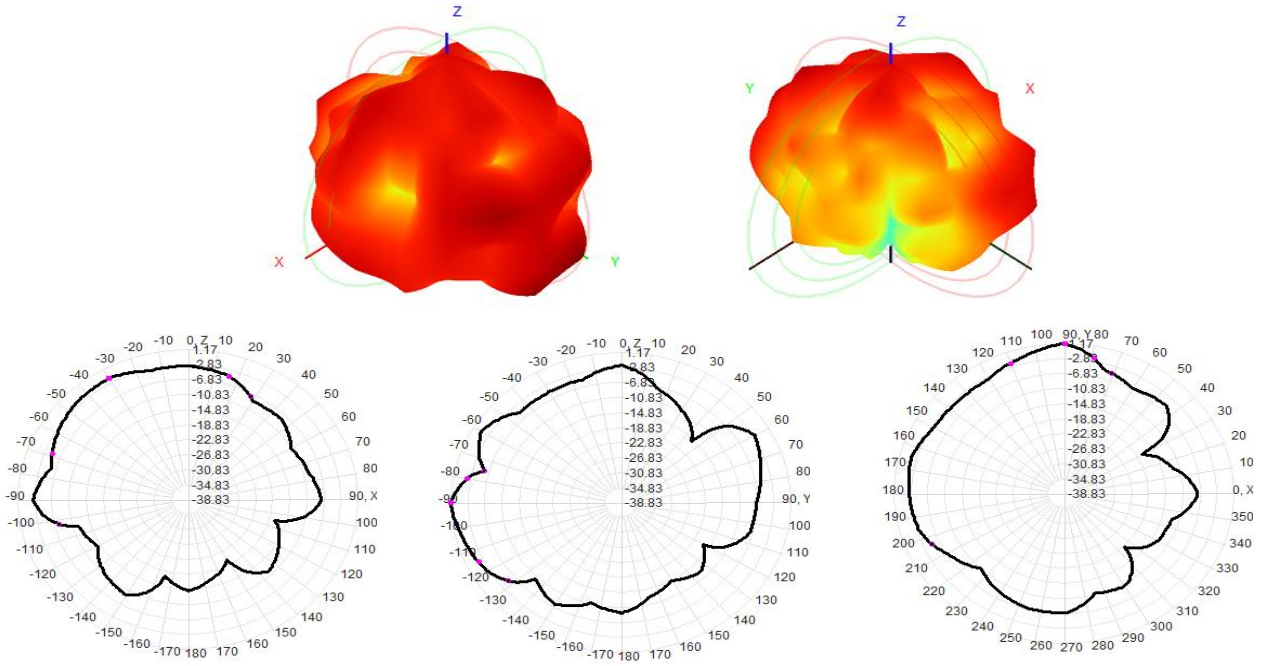

5.1、无源场型图-2480MHz

Passive Field Pattern Diagram - 2480MHz

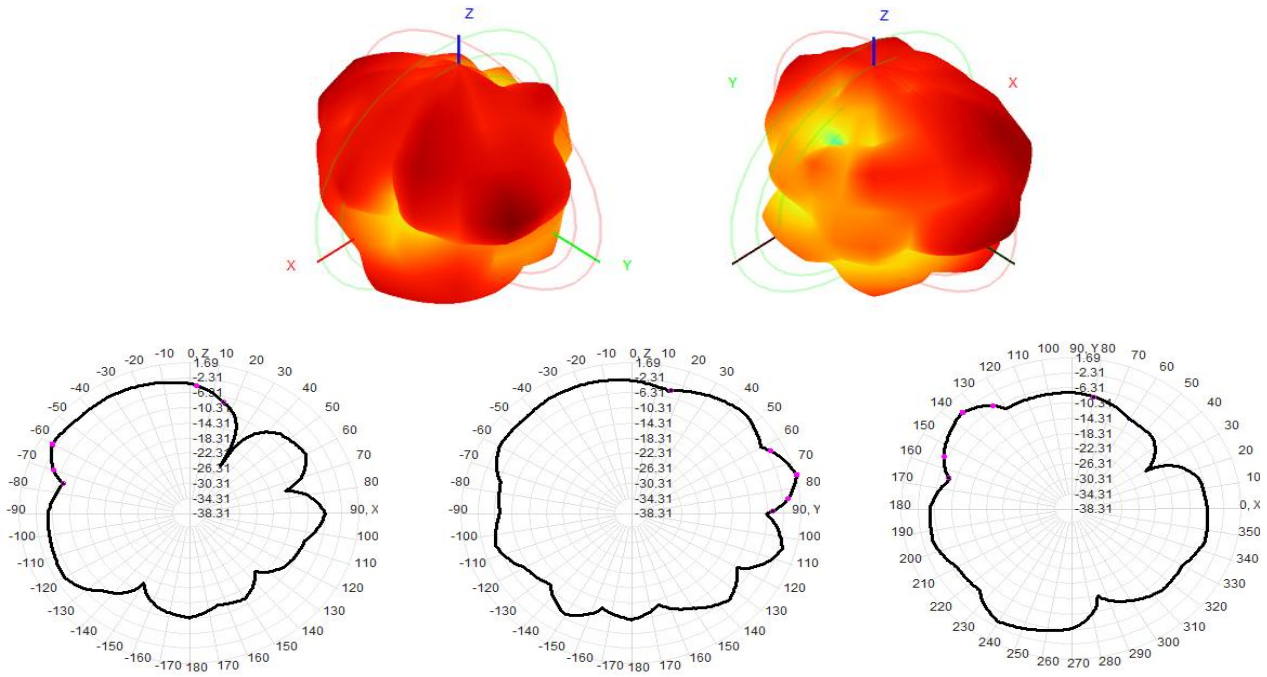

Confidentiality requirements

Shenzhen Daxian Technology Co., Ltd. already possesses the information provided by the proprietary technology, which should be strictly confidential and not allowed to be disclosed to any person or company without the prior written consent of Shenzhen Daxian Technology Co., Ltd

7、天线隔离度 antenna isolation

（BT天线） 和 （WIFI 1天线）隔离度
(BT antenna) and (WIFI 1 antenna) isolation degree

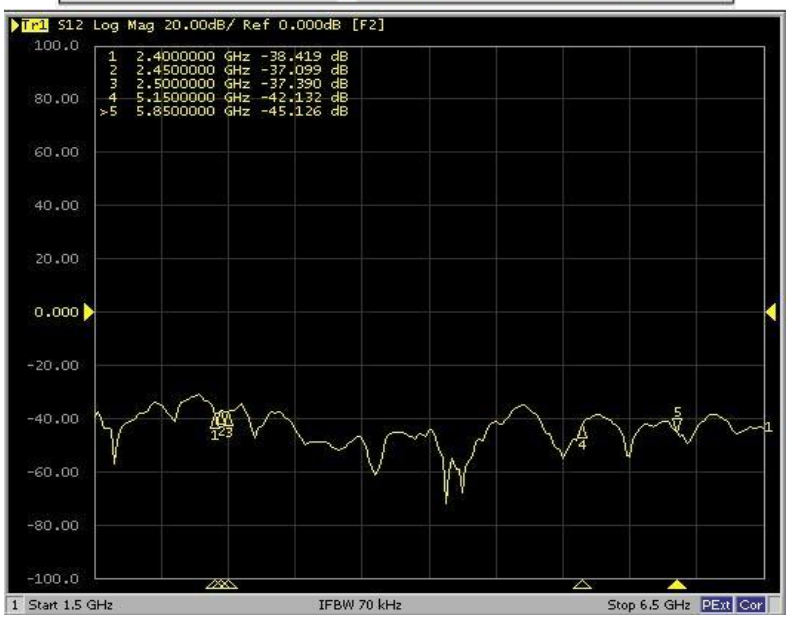

（BT天线） 和 （WIFI 2天线）隔离度
(BT antenna) and (WIFI 2 antenna) isolation

（WIFI 1天线） 和 （WIFI 2天线）隔离度
(WIFI 1 antenna) and (WIFI 2 antenna) isolation degree

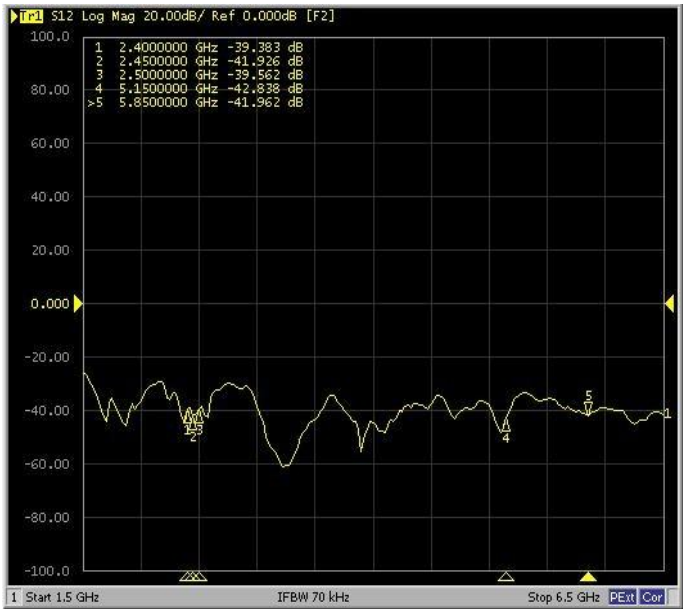

Confidentiality requirements

Shenzhen Daxian Technology Co., Ltd. already possesses the information provided by the proprietary technology, which should be strictly confidential and not allowed to be disclosed to any person or company without the prior written consent of Shenzhen Daxian Technology Co., Ltd

8、户外拉距测试 Outdoor pull distance test

测试时间Test time：2023/02/24

测试场地：深圳市宝安区鹤洲豪庭附近

test site: Near Hezhou Haoting, Bao'an District, Shenzhen

测试手机test mobile：Iphone 14 Pro

配网手机：三星 Noet9

Distribution phone：Samsung Noet9

配网APP Distribution APP :JBL ONE

测试路由器：华硕-RT-AC86U

Test Router:ASUS-RT-AC86U

Confidentiality requirements

Shenzhen Daxian Technology Co., Ltd. already possesses the information provided by the proprietary technology, which should be strictly confidential and not allowed to be disclosed to any person or company without the prior written consent of Shenzhen Daxian Technology Co., Ltd

8.1、户外拉距测试 Outdoor pull distance test

测试方向 Testing direction	前 Front	后 Behind	左 Left	右 Right
	测试距离 test distance			
BT	100m	100m	100m	100m
WIFI 2.4G	210m	210m	210m	210m
WIFI 5.8G	260m	260m	260m	260m

Confidentiality requirements

Shenzhen Daxian Technology Co., Ltd. already possesses the information provided by the proprietary technology, which should be strictly confidential and not allowed to be disclosed to any person or company without the prior written consent of Shenzhen Daxian Technology Co., Ltd

9、哈曼 RF 衰减实验室测试数据 Harman RF Attenuation Laboratory Test Data

机器方向面 Machine direction plane	BT	WIFI 2.4G	WIFI 5.8G
前 Front	29 db	29 db	28 db
左 Left	30 db	31 db	30 db
后 Behind	32 db	32 db	31 db
右 Right	30 db	31 db	30 db

10、结论 conclusion

此天线是在客户提供样机基础上设计，电参数和结构性能已达到技术要求，请确认！

This antenna is designed based on the prototype provided by the customer. The electrical parameters and structural performance have met the technical requirements, please confirm!

Confidentiality requirements
Shenzhen Daxian Technology Co., Ltd. already possesses the information provided by the proprietary technology, which should be strictly confidential and not allowed to be disclosed to any person or company without the prior written consent of Shenzhen Daxian Technology Co., Ltd

	0~10	10~30	30~50	50~	角度	○	◎	⊥	▱
	0.05	0.10	0.15	0.20	1°	0.02	0.02	0.03	0.05

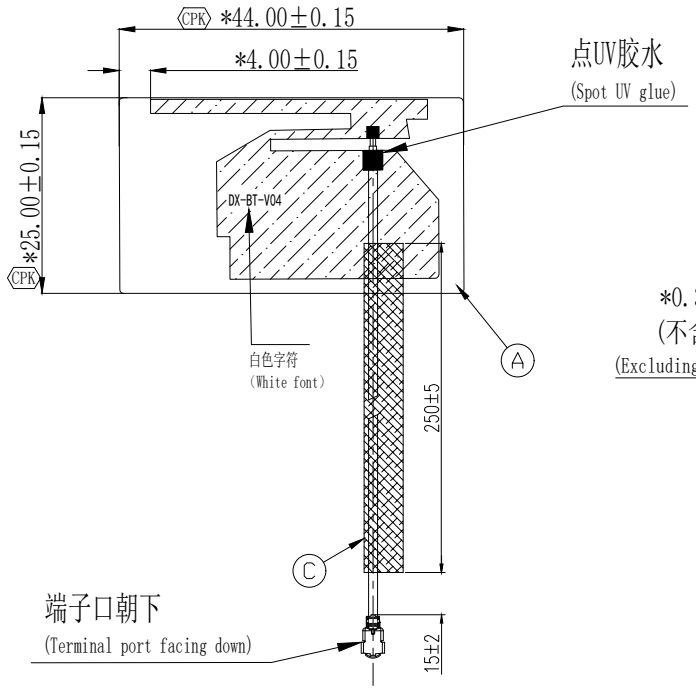

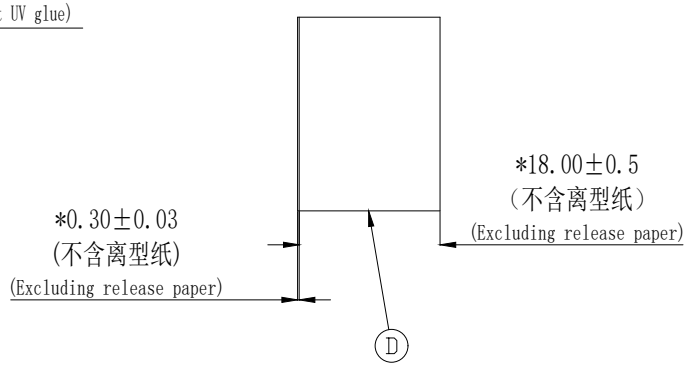

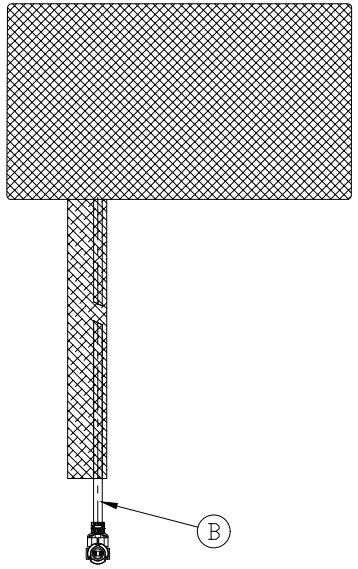

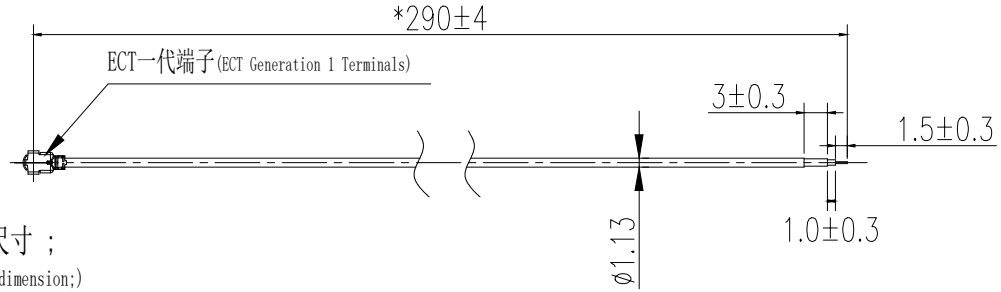

技术要求:
(technical requirement:)

1. "*"为重点尺寸 ;
(1. "*"is the key dimension;)
2. 未标注尺寸请依图纸;
(2. Please refer to the drawing for unspecified dimensions;)
3. 不可有虚焊、漏焊、短线、断线等操作不良;
(3. There should be no poor operation such as faulty soldering, missing soldering, short wires, broken wires, etc;)
4. 符合 RoHS 要求 .
(4. Meet RoHS requirements.)

序号(serial number)	零件名称(Part Name)	材质(material)	颜色(colour)	备注(Note)
D	泡绵(Foam)	EVA	黑色(black)	
C	线材海绵(Cable sponge)	PUF	黑色(black)	
B	端子同轴线(RF connector)	Cable	蓝色(blue)	
A	FPC	Electrolytic copper PI	黑色(black)	

版 本(edition)	描述(describe)	日期(date)	备注(Note)
A	首次发行(Initial Issue)	2023/2/26	

TOPANT

深 圳 大 显 科 技 有 限 公 司
Shenzhen Topant Technology Co., Ltd.

机型(Machine model)	Ultimate	产品颜色(Product Color)	黑色(black)	日期(date)	2023/2/26
项目编码(Project Code)	Bt-imate-106	模面处理(Mold surface treatment)	NA	结构(MD)	闭业智
零件名称(Part Name)	BT天线(BT antenna)	单位 (unit) mm	比例 (scale) 1:1	射频(RF)	沈川
零件编码(Part Number)	1t-imate-106	第三视角 (Third perspective)		审核(check)	胡俊
材质(material)	FPC+sponge+RF connector+Foam			批准(ratify)	张磊
保存路径(Save Path)				当前版本(current version)	A