SHARP®

HIGH SPEED OVEN OPERATION MANUAL

Carousel®

MODEL

R-90GC

CONTENTS

- Precautions to Avoid Possible Exposure to Excessive Microwave Energy ..... Inside Front Cover
- For Customer Assistance ... Inside Front Cover
- Consumer Limited Warranty 1
- Product Information Card 1
- Important Safety Instructions 2
- Unpacking and Installation Instructions ... 3
- Grounding Instructions 3
- Information You Need to Know ..... 4 - 6
- Part Names ..... 7 - 8
- Before Operating 9
- Manual Operation 9-13
- Automatic Cooking 13-20
- Special Features 21-25
  - Popcorn 21
  - Reheat / Compu Cook 22
  - Compu Defrost 24
  - Manual Defrost 25
- Other Convenient Features 26-28
- Cleaning & Care 29
- Service Call Check 30
- Specifications 30
- Guia Auto-Touch ..... Parte Interior de la Cubierta Trasera
- Auto-Touch Guide ..... Back Cover

READ ALL INSTRUCTIONS CAREFULLY BEFORE USING THE OVEN.

FOR CUSTOMER ASSISTANCE

To aid in reporting this HIGH SPEED oven in case of loss or theft, please record below the model number and serial number located on the unit. We also suggest you record all the information listed and retain for future reference.

Please provide the following information when you write or call: model number, serial number, date of purchase, your complete mailing address (including zip code), your daytime telephone number (including area code) and description of the problem.

MODEL NUMBER _____	SERIAL NUMBER _____
DATE OF PURCHASE _____	
DEALER _____	TELEPHONE _____
SERVICER _____	TELEPHONE _____

TO PHONE:

DIAL 1-800- BE-SHARP (237-4277) for :

SERVICE (for your nearest Sharp Authorized Servicer)
PARTS (for your authorized parts distributor)
ADDITIONAL CUSTOMER INFORMATION

DIAL 1-800-642-2122 for :

ACCESSORIES and SHARP CAROUSEL COOKBOOK

TO WRITE:

Sharp Electronics Corporation
Customer Assistance Center
1300 Naperville Drive
Romeoville, IL 60446-1091

TO ACCESS INTERNET: www.sharp-usa.com

PRECAUTIONS TO AVOID POSSIBLE EXPOSURE TO EXCESSIVE MICROWAVE ENERGY

(a) Do not attempt to operate this oven with the door open since open-door operation can result in harmful exposure to microwave energy. It is important not to defeat or tamper with the safety interlocks.

(b) Do not place any object between the oven front face and the door or allow soil or cleaner residue to accumulate on sealing surfaces.

(c) Do not operate the oven if it is damaged. It is particularly important that the oven door close properly and that there is no damage to the: (1) door (bent), (2) hinges and latches (broken or loosened), (3) door seals and sealing surfaces.

(d) The oven should not be adjusted or repaired by anyone except properly qualified service personnel.

CONSUMER LIMITED WARRANTY

SHARP ELECTRONICS CORPORATION warrants to the first consumer purchaser that this Sharp brand product (the "Product"), when shipped in its original container, will be free from defective workmanship and materials, and agrees that it will, at its option, either repair the defect or replace the defective Product or part thereof with a new or remanufactured equivalent at no charge to the purchaser for parts or labor for the period(s) set forth below.

This warranty does not apply to any appearance items of the Product nor to the additional excluded item(s) set forth below nor to any Product the exterior of which has been damaged or defaced, which has been subjected to improper voltage or other misuse, abnormal service or handling, or which has been altered or modified in design or construction.

In order to enforce the rights under this limited warranty, the purchaser should follow the steps set forth below and provide proof of purchase to the servicer.

The limited warranty described herein is in addition to whatever implied warranties may be granted to purchasers by law. ALL IMPLIED WARRANTIES INCLUDING THE WARRANTIES OF MERCHANTABILITY AND FITNESS FOR USE ARE LIMITED TO THE PERIOD(S) FROM THE DATE OF PURCHASE SET FORTH BELOW. Some states do not allow limitations on how long an implied warranty lasts, so the above limitation may not apply to you.

Neither the sales personnel of the seller nor any other person is authorized to make any warranties other than those described herein, or to extend the duration of any warranties beyond the time period described herein on behalf of Sharp.

The warranties described herein shall be the sole and exclusive warranties granted by Sharp and shall be the sole and exclusive remedy available to the purchaser. Correction of defects, in the manner and for the period of time described herein, shall constitute complete fulfillment of all liabilities and responsibilities of Sharp to the purchaser with respect to the Product, and shall constitute full satisfaction of all claims, whether based on contract, negligence, strict liability or otherwise. In no event shall Sharp be liable, or in any way responsible, for any damages or defects in the Product which were caused by repairs or attempted repairs performed by anyone other than an authorized servicer. Nor shall Sharp be liable or in any way responsible for any incidental or consequential economic or property damage. Some states do not allow the exclusion of incidental or consequential damages, so the above exclusion may not apply to you.

THIS WARRANTY GIVES YOU SPECIFIC LEGAL RIGHTS. YOU MAY ALSO HAVE OTHER RIGHTS WHICH VARY FROM STATE TO STATE.

Your Product Model Number & Description:	R-90GC Home Use HIGH SPEED Oven. (Be sure to have this information available when you need service for your Product.)
Warranty Period for this Product:	One (1) year parts and labor. The warranty period continues for an additional four (4) years, for a total of five (5) years, with respect to the magnetron tube in the Product for parts only; labor and service are not provided free of charge for this additional period.
Additional Item(s) Excluded from Warranty Coverage (if any):	Non-functional accessories, turntable and light bulb.
Where to Obtain Service:	From a Sharp Authorized Servicer located In the United States. To find the location of the nearest Sharp Authorized Servicer, call Sharp toll free at 1-800-BE-SHARP (1-800-237-4277).
What to do to Obtain Service:	Ship prepaid or carry in your Product to a Sharp Authorized Servicer. Be sure to have **Proof of Purchase** available. If you ship the Product, be sure it is insured and packaged securely.

TO OBTAIN SUPPLY, ACCESSORY OR PRODUCT INFORMATION, CALL
1-800-BE-SHARP OR VISIT www.Sharp-usa.com.
Save the proof of purchase as it is needed should your oven ever require warranty service.

PRODUCT INFORMATION CARD

The product information card, which is on the inside of the microwave oven carton, should be completed within ten days of purchase and returned. We will keep it on file and help you access the information in case of loss, damage or theft. This will also enable us to contact you in the unlikely event that any adjustments or modifications are ever required for your oven.

IMPORTANT SAFETY INSTRUCTIONS

When using electrical appliances basic safety precautions should be followed, including the following:

WARNING - To reduce the risk of burns, electric shock, fire, injury to persons or exposure to excessive microwave energy:

1. **Read all instructions before using the appliance.**
2. Read and follow the specific **"PRECAUTIONS TO AVOID POSSIBLE EXPOSURE TO EXCESSIVE MICROWAVE ENERGY"** on inside front cover.
3. This appliance must be grounded. Connect only to properly grounded outlet. See **"GROUNDING INSTRUCTIONS"** on page 3.
4. Install or locate this appliance only in accordance with the provided installation instructions.
5. Some products such as whole eggs and sealed containers —for example, closed glass jars — are able to explode and should not be heated in this oven.
6. Use this appliance only for its intended use as described in this manual. Do not use corrosive chemicals or vapors in this appliance. This type of oven is specifically designed to heat, cook or dry food. It is not designed for industrial or laboratory use.
7. As with any appliance, close supervision is necessary when used by children.
8. Do not operate this appliance if it has a damaged cord or plug, if it is not working properly or if it has been damaged or dropped.
9. This appliance should be serviced only by qualified service personnel. Contact nearest Sharp Authorized Servicer for examination, repair or adjustment.
10. Do not cover or block any openings on the appliance.
11. Do not store or use this appliance outdoors. Do not use this product near water—for example, near a kitchen sink, in a wet basement, near a swimming pool or similar locations.
12. Do not immerse cord or plug in water.
13. Keep cord away from heated surfaces.
14. Do not let cord hang over edge of table or counter.
15. See door surface cleaning instructions on page 18.
16. To reduce the risk of fire in the oven cavity:
    a. Do not overcook food. Carefully attend appliance when paper, plastic or other combustible materials are placed inside the oven to facilitate cooking.
    b. Remove wire twist-ties from paper or plastic bags before placing bag in oven.
    c. **If materials inside the oven ignite, keep oven door closed, turn oven off and disconnect the power cord or shut off power at the fuse or circuit breaker panel.**
    d. Do not use the cavity for storage purposes. Do not leave paper products, cooking utensils or food in the cavity when not in use.
17. Liquids, such as water, coffee or tea are able to be overheated beyond the boiling point without appearing to be boiling due to surface tension of the liquid. Visible bubbling or boiling when the container is removed from the microwave oven is not always present. THIS COULD RESULT IN VERY HOT LIQUIDS SUDDENLY BOILING OVER WHEN A SPOON OR OTHER UTENSIL IS INSERTED INTO THE LIQUID. To reduce the risk of injury to persons:
    a. Do not overheat the liquid.
    b. Stir the liquid both before and halfway through heating it.
    c. Do not use straight-sided containers with narrow necks. Use a wide-mouthed container.
    d. After heating, allow the container to stand in the microwave oven at least for 20 seconds before removing the container.
    e. Use extreme care when inserting a spoon or other utensil into the container.
18. If the oven light fails, consult a SHARP AUTHORIZED SERVICER.
19. Do not operate any heating or cooking appliance beneath this appliance.
20. Do not mount unit over or near any portion of a heating or cooking appliance.
21. Do not mount over a sink.
22. Do not store anything directly on top of the appliance surface when the appliance is in operation.

SAVE THESE INSTRUCTIONS

UNPACKING AND INSTALLATION INSTRUCTIONS

Unpacking and Examining Your Oven

Remove:

1. all packing materials from inside the oven cavity; however, DO NOT REMOVE THE WAVEGUIDE COVER, which is located on the right cavity wall. Read enclosures and SAVE the Operation Manual. Sharp High Speed Convection Microwave Oven Cookbook and Touch Guide.

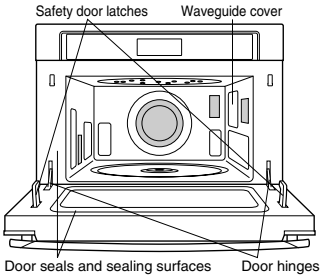

2. the feature sticker, if there is one, from the outside of the door.

Check the oven for any damage, such as misaligned or bent door, damaged door seals and sealing surfaces, broken or loose door hinges and latches and dents inside the cavity or on the door. If there is any damage, do not operate the oven and contact your dealer or SHARP AUTHORIZED SERVICER.

Choosing a Location for Your Oven

You will use your oven frequently so plan its location for ease of use. The oven must be placed on a countertop which is a minimum of 36 inches from the floor. Allow at least 2 inches on the sides, top and at the rear of the oven for air circulation. Be sure to position oven so that the rear cannot be touched inadvertently.

Built-in Kit

Your oven can be built into a cabinet or wall—not near or above a heat source—using one of Sharp's Built-in Kits, Model RK-90S30. If your dealer does not stock the kit, order directly by call-ing 1-800-642-2122 to have it sent to your address.

The kit includes ducts and finish trim strips and easy-to-follow instructions for installation as well as the location of the power supply.

GROUNDING INSTRUCTIONS

This appliance must be grounded. This oven is equipped with a cord having a grounding wire with a grounding plug. It must be plugged into a wall receptacle that is properly installed and grounded in accordance with the National Electrical Code and local codes and ordinances. In the event of an electrical short circuit, grounding reduces risk of electric shock by providing an escape wire for the electric current.

WARNING – Improper use of the grounding plug can result in a risk of electric shock.

Electrical Requirements

The electrical requirements are a 240 volt 60 Hz, AC only, 15 amp. or more protected electrical supply. It is recommended that a separate circuit serving only this appliance be provided.

The oven is equipped with a 3-prong grounding plug. It must be plugged into a wall receptacle that is properly installed and grounded.

Permanent and Correct Installation

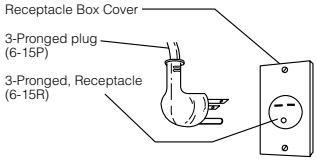

Extension Cord

If it is necessary to use an extension cord, use only a 3-wire extension cord that has a 3-blade grounding plug and a 3-slot receptacle that will accept the plug on the microwave oven. The marked rating of the extension cord should be AC 240 volt, 15 amp. or more.

Be careful not to drape the cord over the countertop or table where it can be pulled on by children or tripped over accidentally.

Notes: 1. If you have any questions about the grounding or electrical instructions, consult a qualified electrician or service person.

2. Neither Sharp nor the dealer can accept any liability for damage to the oven or personal injury resulting from failure to observe the correct electrical connection procedures.

Radio or TV Interference

Should there be any interference caused by the microwave oven to your radio or TV, check that the microwave oven is on a different electrical circuit, relocate the radio or TV as far away from the oven as feasible or check position and signal of receiving antenna.

INFORMATION YOU NEED TO KNOW

ABOUT YOUR OVEN

This Operation Manual is valuable: read it carefully and always save it for reference.

The Sharp High Speed Convection Microwave Cook Book is valuable asset. Check it frequently for cooking principles, techniques, hints and recipes.

NEVER use the oven without the turntable and support nor turn the turntable over so that a large dish could be placed in the oven. The turntable will turn both clockwise and counterclockwise.

ALWAYS have food in the oven when it is on to absorb the microwave energy.

When using the oven at power levels below 100%, you may hear the magnetron cycling on and off. It is normal for the exterior of the oven to be warm to the touch when cooking or reheating.

Condensation is a normal part of microwave cooking.

After cooking, the cooling fan may switch on to cool the oven cavity. When the cooling fan works, the display may show "NOW COOLING" and you may hear the sound of the cooling fan.

Room humidity and the moisture in food will influence the amount of moisture that condenses in the oven. Generally, covered foods will not cause as much condensation as uncovered ones. Vents on the oven back must not be blocked.

~~After using, you may hear the sound of the cooling fan. The fan may continue to operate as long as 5 minutes, depending on the oven temperature.~~

Be aware that, unlike microwave-only ovens, ~~convection microwave~~ high speed ovens have a tendency to become hot during cooking.

The oven is for food preparation only. It should not be used to dry clothes or newspapers.

Your oven is rated 1000 watts by using the IEC Test Procedure. In using recipes or package directions, check food a minute or two before the minimum time and add time accordingly.

ABOUT FOOD

FOOD	DO	DON'T
Eggs, sausages, nuts, seeds fruits & vegetables	• Puncture egg yolks before cooking to prevent "explosion". • Pierce skins of potatoes, apples, squash, hot dogs and sausages so that steam escapes.	• Cook eggs in shells. • Reheat whole eggs. • Dry nuts or seeds in shells.
Popcorn	• Use specially bagged popcorn for the microwave oven. • Listen while popping corn for the popping to slow to 1 or 2 seconds or use special **POPCORN** pad.	• Pop popcorn in regular brown bags or glass bowls. • Exceed maximum time on popcorn package.
Baby food	• Transfer baby food to small dish and heat carefully, stirring often. Check temperature before serving. • Put nipples on bottles after heating and shake thoroughly. "Wrist" test before feeding.	• Heat baby food in original jars. • Heat disposable bottles. • Heat bottles with nipples on.
General	• Cut baked goods with filling after heating to release steam and avoid burns. • Stir liquids briskly before heating and allow to stand at least for 20 seconds after heating before stirring or drinking to avoid eruption. • Use deep bowl, when cooking liquids or cereals, to prevent boilovers.	• Heat or cook in closed glass jars or air tight containers. • Can in the microwave as harmful bacteria may not be destroyed. • Deep fat fry. • Dry wood, gourds, herbs or wet papers.

high speed

ABOUT UTENSILS AND COVERINGS

Convection, Grill,

It is not necessary to buy all new cookware. Many pieces already in your kitchen can be used successfully in your new ~~convection microwave~~ oven. The chart below will help you decide what utensils and coverings should be used in each mode.

Utensils and Coverings	Microwave Only	~~Convection Grill,~~ Bake	Roast
Aluminum foil	Yes Small flat pieces of aluminum foil placed smoothly on food can be used to shield areas from cooking or defrosting too quickly. Keep foil at least 1 inch from walls of oven.	Yes For shielding	Yes For shielding
Aluminum containers	Yes Can be used if 3/4 filled with food. Keep 1 inch away from walls and do not cover with foil.	Yes ~~Speed~~ Grill/ Bake-No cover	Yes Can be used if 3/4 filled with food. Keep 1 inch away from walls and do not cover with foil.
Browning dish	Yes Do not exceed recommended preheating time. Follow manufacturer's directions.	No	No
Glass ceramic (Pyroceram.®)	Yes Excellent	Yes Excellent	Yes Excellent
Glass, heat-resistant	Yes Excellent. Overturned pie plate necessary for popping popcorn.	Yes Excellent	Yes Excellent
Glass, non-heat-resistant	No	No	No
Lids, glass	Yes	Yes ~~Speed~~ Grill/ Bake-No cover	Yes
Lids, metal	No	Yes ~~Speed~~ Grill/ Bake-No cover	No
Metal cookware	No	Yes	Yes Do not use metal covering.
Metal, misc: dishes with metallic trim, screws, bands, handles. Metal twist ties	No	No	No
Oven cooking bags	Yes Good for large meats or foods that need tenderizing. DO NOT use metal twist ties.	Yes ~~Speed~~ Grill/ Bake-No	Yes DO NOT use metal twist ties.
Paper plates	Yes For reheating	No	No
Paper towels	Yes To cover for reheating and cooking. Do not use recycled paper towels which may contain metal filings.	No	No
Paper, ovenable	Yes	Yes For temperatures up to 400°F. Do not use for Grill.	Yes For temperatures up to 400°F.
Microwave-safe plastic containers	Yes Use for reheating and defrosting. Some microwave-safe plastics are not suitable for cooking foods with high fat and sugar content. Follow manufacturer's directions.	No	No
Plastic, Thermoset®	Yes	Yes Are heat resistant up to 425°F. Do not use for Grill.	Yes
Plastic wrap	Yes Use brands specially marked for microwave use. DO NOT allow plastic wrap to touch food. Vent so steam can escape.	No	No
Pottery, porcelain stoneware	Yes Check manufacturer's recommendation for being microwave safe.	Yes	Yes Must be microwave safe AND ovenable.
Styrofoam	Yes For reheating	No	No
Wax paper	Yes Good covering for cooking and reheating	No	No
Wicker, wood, straw	Yes May be used for short periods of time. Do not use with high fat or high sugar content foods. Could char.	No	No

DISH CHECK. If you wish to check if a dish is safe for microwaving, place the empty dish in the oven and microwave on HIGH for 30 seconds. If the dish becomes very hot, do NOT use it for microwaving.

AUTOMATIC COOKING Please use the recommended container in the cooking chart in this operation manual, cook book and interactive display.

ACCESSORIES There are many microwave accessories available for purchase. Evaluate carefully before you purchase so that they meet your needs. A microwave-safe thermometer will assist you in determining correct doneness and assure you that foods have been cooked to safe temperatures when using microwave-only cooking. Sharp is not responsible for any damage to the oven when accessories are used.

ABOUT CHILDREN AND THE MICROWAVE

Children below the age of 7 should use the microwave oven with a supervising person very near to them. Between the ages of 7 and 12, the supervising person should be in the same room.

The child must be able to reach the oven comfortably; if not, he/she should stand on a sturdy stool.

At no time should anyone be allowed to lean or swing on the oven door.

Children should be taught all safety precautions: use potholders, remove coverings carefully, pay special attention to packages that crisp food because they may be extra hot.

Don't assume that because a child has mastered one cooking skill he/she can cook everything.

Children need to learn that the microwave oven is not a toy. See page 29 for Child Lock feature.

ABOUT MICROWAVE COOKING

- Arrange food carefully. Place thickest areas towards outside of dish.
- Watch cooking time. Cook for the shortest amount of time indicated and add more as needed. Food severely overcooked can smoke or ignite.
- Cover foods while cooking. Check recipe or cookbook for suggestions: paper towels, wax paper, microwave plastic wrap or a lid. Covers prevent spattering and help foods to cook evenly.
- Shield with small flat pieces of aluminum foil any thin areas of meat or poultry to prevent overcooking before dense, thick areas are cooked thoroughly.
- Stir foods from outside to center of dish once or twice during cooking, if possible.
- Turn foods over once during microwaving to speed cooking of such foods as chicken and hamburgers. Large items like roasts must be turned over at least once.
- Rearrange foods such as meatballs halfway through cooking both from top to bottom and from the center of the dish to the outside.
- Add standing time. Remove food from oven and stir, if possible. Cover for standing time which allows the food to finish cooking without overcooking.
- Check for doneness. Look for signs indicating that cooking temperatures have been reached.

  Doneness signs include:

  - Food steams throughout, not just at edge.
  - Center bottom of dish is very hot to the touch.
  - Poultry thigh joints move easily.
  - Meat and poultry show no pinkness.
  - Fish is opaque and flakes easily with a fork.

ABOUT SAFETY

- Check foods to see that they are cooked to the United States Department of Agriculture's recommended temperatures.

TEMP	FOOD
160°F	... for fresh pork, ground meat, boneless white poultry, fish, seafood, egg dishes and frozen prepared food.
165°F	... for leftover, ready-to-reheat refrigerated, and deli and carry-out "fresh" food.
170°F	... white meat of poultry.
180°F	... dark meat of poultry.

To test for doneness, insert a meat thermometer in a thick or dense area away from fat or bone. NEVER leave the thermometer in the food during cooking, unless using a microwave thermometer when cooking with only microwave power.

- ALWAYS use potholders to prevent burns when handling utensils that are in contact with hot food. Enough heat from the food can transfer through utensils to cause skin burns.
- Avoid steam burns by directing steam away from the face and hands. Slowly lift the farthest edge of a dish's covering and carefully open popcorn and oven cooking bags away from the face.
- Stay near the oven while it's in use and check cooking progress frequently so that there is no chance of overcooking food.
- NEVER use the cavity for storing cookbooks or other items.
- Select, store and handle food carefully to preserve its high quality and minimize the spread of foodborne bacteria.
- Keep waveguide cover clean. Food residue can cause arcing and/or fires.
- Use care when removing items from the oven so that the utensil, your clothes or accessories do not touch the safety door latches.
- Keep aluminum foil used for shielding at least 1 inch away from walls, ceiling and door.

PART NAMES

MICROWAVE OVEN PARTS

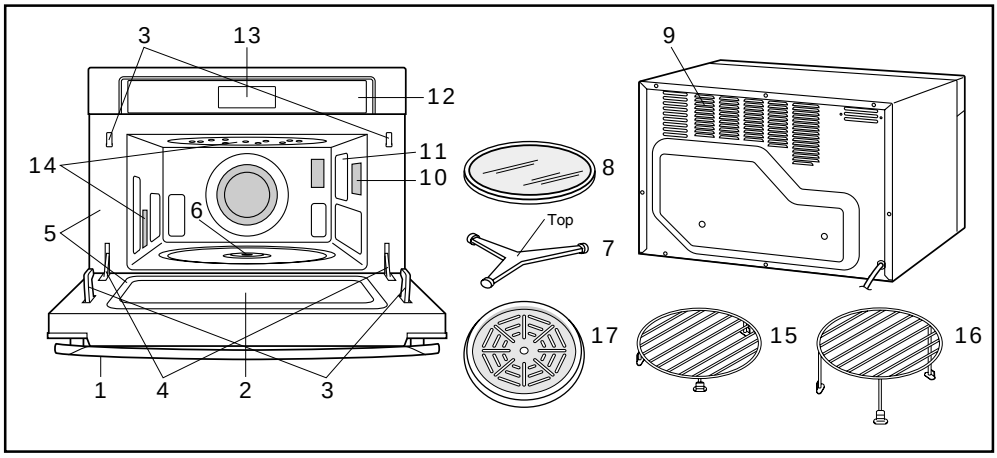

1 Door handle

Pull to open door.

2 Oven door with see-through window

3 Safety door latches

The oven will not operate unless the door is securely closed.

4 Door hinges

5 Door seals and sealing surfaces

6 Turntable motor shaft

7 Removable turntable support

Carefully place the turntable support in the center of the oven floor.

8 Removable turntable

Place the turntable on the turntable support securely. The turntable will rotate clockwise or counterclockwise. Only remove for cleaning.

9 Ventilation openings

10 Oven light

It will light when oven is operating or door is open.

11 Waveguide cover: DO NOT REMOVE.

12 Auto-Touch control panel

13 Time display: 99 minutes, 99 seconds

14 Convection air openings

15 Removable low rack

16 Removable high rack

17 Splash guard

INTERACTIVE DISPLAY

The Interactive Display spells out operating steps and shows cooking hints. When indicator above CUSTOM HELP is lighted, touch to read a specific hint which may assist you.

Each indicator shows what function is in progress.

R-90GC

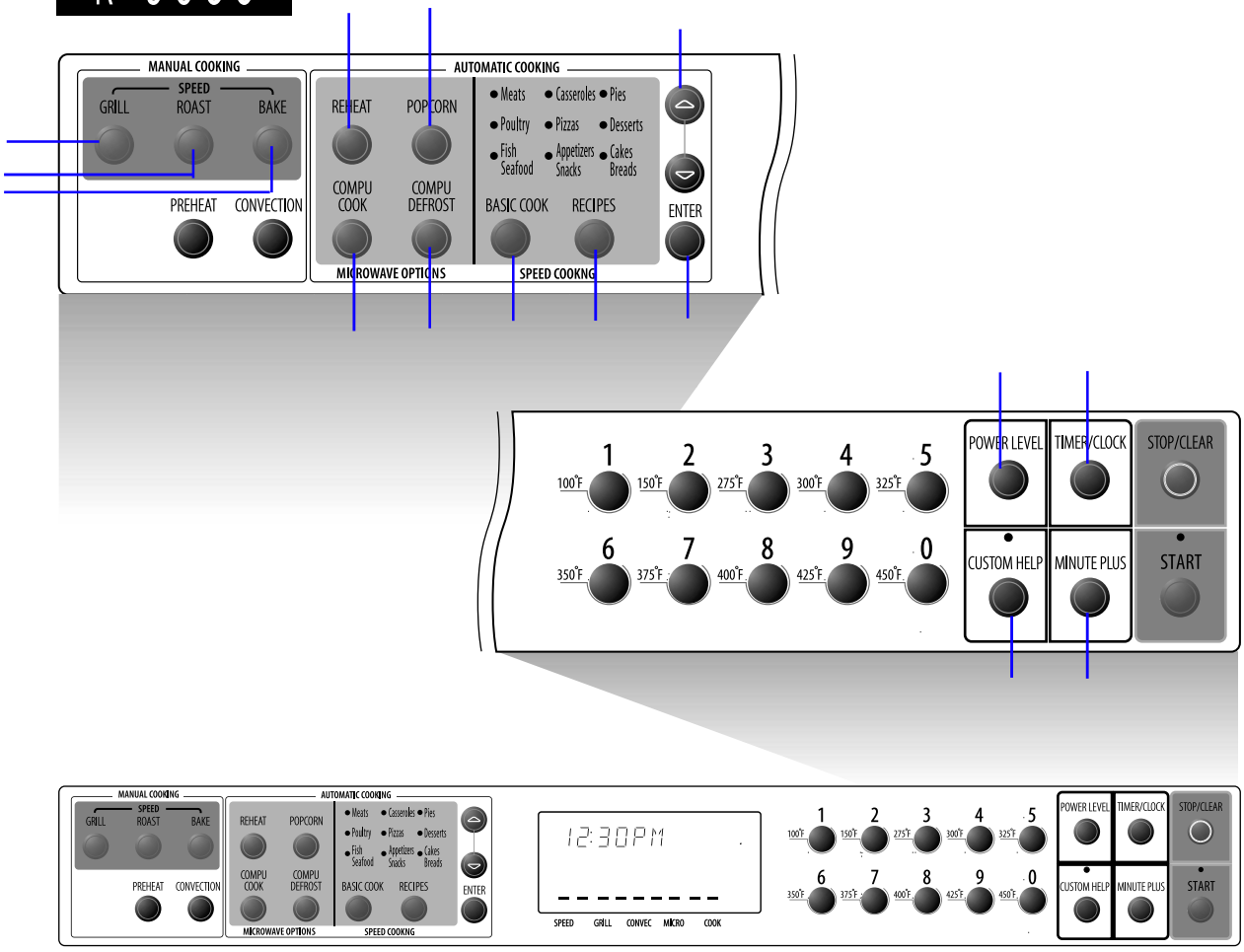

Number next to the control panel illustration indicates page on which there are a feature description and usage information.

BEFORE OPERATING

- Before operating your new oven make sure you read and understand this operation manual completely.
- Before the oven can be used, follow these procedures:

SHARP SIMPLY THE BEST

1. Plug in the oven. Close the door. The oven display will show **PRESS CLEAR AND CLOCK**.
2. Touch the **STOP/CLEAR** pad. [:] will appear.
3. Set clock (See below).
4. Heat your oven without food by using Refresh mode. (See page 28).

TO SET THE CLOCK

- Suppose you want to enter the correct time of day 12:30 (A.M. or P.M.).

PROCEDURE		
1	Touch **CLOCK** pad and number pad [2].	TIMER/CLOCK 2
2	Enter the correct time of day by touching the numbers in sequence.	1 2 3 0
3	Touch **CLOCK** pad again.	TIMER/CLOCK

This is a 12 hour clock. If you attempt to enter an incorrect clock time, **ERROR** will appear in the display. Touch the **STOP/CLEAR** pad and re-set the clock.

- If the electrical power supply to your oven should be interrupted, the display will intermittently show **PRESS CLEAR AND CLOCK** after the power is re-instated. If this occurs during cooking, the program will be erased. The time of day will also be erased. Simply touch **STOP/CLEAR** pad and reset the clock for the correct time of day.

SHARP SIMPLY THE BEST

STOP/CLEAR

Touch the **STOP/CLEAR** pad to:

1. Erase if you make a mistake during programming.
2. Cancel timer.
3. Stop the oven temporarily during cooking.
4. Return the time of day to the display.
5. Cancel a program during cooking, touch twice.

MANUAL OPERATION

MICROWAVE TIME COOKING

Your oven can be programmed for 99 minutes 99 seconds (99.99). Always enter the seconds after the minutes, even if they are both zeros.

- Suppose you want to cook for 5 minutes at 100%.

PROCEDURE		
1	Enter cooking time.	5 0 0
2	Touch **START** pad.	START

TO SET POWER LEVEL

There are eleven preset power levels.

Using lower power levels increases the cooking time which is recommended for foods such as cheese, milk and long slow cooking of meats. Consult cookbook or recipes for specific recommendations.

TOUCH POWER LEVEL PAD	APPROXIMATE PERCENTAGE OF POWER	COMMON WORDS FOR POWER LEVELS
once	100%	High
twice	90%	
3 times	80%	
4 times	70%	Medium High
5 times	60%	
6 times	50%	Medium
7 times	40%	
8 times	30%	Med Low/Defrost
9 times	20%	
10 times	10%	Low
11 times	0%	

- Suppose you want to defrost for 5 minutes at 30%.

PROCEDURE		
1	Enter cooking time.	5 0 0
2	Touch **POWER LEVEL** pad 8 times or hold down until the desired power level appears.	POWER LEVEL x 8
3	Touch **START** pad.	START
4	When the defrost time is complete, a long tone will sound and **END** will appear in the display.	

You can program up to 4 automatic cooking sequences. Follow directions on page 26. Note that **POWER LEVEL** must be entered first when programming multiple sequences.

SPEED COOKING

Your oven has 3 special speed cooking modes.

1.GRILL

Use GRILL setting for steaks, chops, chicken pieces and many other Grilling foods. You can grill these foods with automatic preheat, without turn over in a short time. GRILL has a pre-programmed setting that cook faster with at high temperature and maximum speed hot air circulation. Only actual cooking time is entered; the oven signals when it is preheated to 450°F. Oven temperature cannot be changed. ~~Use GRILL setting for steaks, chops, chicken pieces and many other foods.~~

- Suppose you want to grill a steak for 15 mintues on grill:

PROCEDURE		
1	Touch **GRILL** pad.	GRILL
2	Enter cooking time.	1 5 0 0
3	Touch **START** pad. Preheat starts. No food in oven.	START
	When the oven reaches the programmed temperature, a signal will sound 4 times*.	
4	Open the door. Place food in the oven. Close the door. Touch **START** pad.	START

- If the oven door is not opened, the oven will automatically hold at the preheat temperature for 30 minutes. After this time has elapsed, an audible signal will sound and the oven will turn off.

NOTE:

1. You can grill foods without preheat. To program only grill (without preheat), touch **GRILL** pad twice at step 1.
2. ~~Temperature can not changed.~~
3. GRILL can get browness faster than in normal cooking. When you cook the food first, please check doneness carefully during cooking. If you get a good doneness, please stop the oven. If extra cooking time is needed, please add.

Caution:

The oven cabinet, cavity, door, accessories and dishes will become hot. To PREVENT BURNS, use thick oven gloves when removing the food or turntable from the oven.

2. ROAST

Use ROAST setting for roast chicken, roast meat, casseroles and many other roasting foods. Roast has a pre-programmed setting that make it easy to cook with high speed air circulation at 325 °F and microwave. You can cook the food 33 % to 50 % less than in normal ovens. No preheat is necessary. Use the low rack to get good doneness.

- Suppose you want to roast 1lb beef steak for 15 minutes on roast.

PROCEDURE		
1	Touch **ROAST** pad.	ROAST
2	Enter cooking time.	1 2 5 0 0
3	Touch **START** pad.	START

NOTE:

1. The temperature can be changed, however the microwave power cannot.
   To change the temperature, touch **ROAST** pad twice at step 1 ~~above.~~ When the display show SELECT COOKING TEMP, touch desired temperature pad.
2. Roasting time is 33 % to 50 % less than in normal ovens. When you cook the food first, enter 1/2 cooking time than in normal ovens and check doneness carefully during cooking. If you get a good doneness, please stop the oven. If extra time need, please add.
3. During ROAST cooking, some metal baking utensils may cause arching when they came in contact with the turntable, oven walls or accessory racks. Arching is a discharge of electricity that occurs when microwaves come in contact with metal.
   If arching is occurs, place a heat resistant dish (Pyrex pie plate, glass pizza dish or dinner plate between the pan and the turntable or rack. If arching occurs with other metal baking utensils, discontinue their use for cooking.

4. Preheating for grill may take from 7 to 10 minutes depending on temperature of room and available power.

3. BAKE

Use BAKE setting for cake, cookies and many other baking foods. Bake has a pre-programmed setting that make it easy to cook with high speed air circulation at 325~~F~~ °F. This setting is for foods that take more than 20 minutes of traditional baking time. Baking time is 25 % to 33 % less than in normal oven. No preheat is necessary. Use the low rack to get good doneness. ←ADD

- Suppose you want to bake a cake for 25 minutes on bake:

PROCEDURE		
1	Touch **BAKE** pad.	BAKE
2	Enter cooking time.	2 5 0 0
3	Touch **START** pad.	START

NOTE:

1. The temperature can be changed.
   To change the temperature, touch **BAKE** pad twice at step 1 ~~above~~. When the display show SELECT COOKING TEMP, touch desired temperature pad. Use minus 25 ~~F~~ °F setting than normal ovens, because of high speed air decrease the baking temperature by 25 ~~F~~ °F than normal oven.
2. Baking time is 25 % to 33 % less than in normal oven. When you cook the food first, enter 1/2 cooking time than in normal ovens and check carefully doneness during cooking. If you get a good doneness, please stop the oven. If extra time need, please add.

NORMAL CONVECTION COOKING

You can also use this oven for normal speed convection oven.

The oven should not be used without the turntable in place, and it should never be restricted so that it cannot rotate. You may remove the turntable when preheating the oven and when preparing food to be cooked directly on the turntable.

Caution:

The oven cabinet, cavity, door, accessories and dishes will become hot. To PREVENT BURNS, use thick oven gloves when removing the food or turntable from the oven.

Convection Cooking

During convection heating, hot air is circulated throughout the oven cavity to brown and crisp foods quickly and evenly. This oven can be programmed for ten different convection cooking temperatures for up to 99 minutes, 99 seconds.

To Cook with Convection

- Suppose you want to cook at 350°F for 20 minutes:

PROCEDURE	
1 Touch **CONVECTION** pad.	CONVECTION
2 Touch temperature pad.	6 (350°F)
3 Enter cooking time.	2 0 0 0
4 Touch **START** pad.	START

NOTE:

If you wish to know the programmed oven temperature, simply touch the **CONVECTION** pad. As long as your finger is touching the **CONVECTION** pad, the programmed oven temperature will be displayed.

3. Preheating may take from 7 to 10 minutes depending on temperature of room and available power.

To Preheat and Cook with Convection

Your oven can be programmed to combine preheating and convection cooking operations. You can preheat to the same temperature as the convection temperature or change to a higher or lower temperature.

- Suppose you want to preheat to and then cook 25 minutes at 350° F convection:

PROCEDURE	
1 Touch **PREHEAT** pad.	PREHEAT
2 Select preheat temperature.	6 (350°F)
3 Enter cooking time.	2 5 0 0
4 Touch **START** pad. Preheat starts. No food in oven.	START
When the oven reaches the programmed temperature, a signal will sound 4 times.	
5 Open the door. Place food in the oven. Close the door. Touch **START** pad.	START

- If the oven door is not opened, the oven will automatically hold at the preheat temperature for 30 minutes. After this time has elapsed, an audible signal will sound, and the oven will turn off.

NOTE:

1. To program only preheat, touch the START pad after step 2. Preheating will start. When the oven reaches the programmed temperature, follow the indicated message.
2. To preheat and cook with the different temperature, touch CONVEC and enter temp after Step 2.

Convection Cooking:

1. When preheating, the turntable can be left in or removed. When using the high rack for 2 shelf baking in a preheated oven, it is easier to remove the turntable for preheat.
   Place high rack on turntable along with foods. When preheat is over, open oven door and quickly place turntable, high rack and foods to be baked inside.
2. Do not cover turntable, low rack or high rack with aluminum foil. It interferes with air flow that cooks food.
3. Round pizza pans are excellent cooking utensils for many convection-only items. Choose pans that do not have extended handles.
4. Using a preheated low rack can give a grilled appearance to steaks, hot dogs etc.

SPEED COOKING

There are 84 basic food and 100 recipes, which is cooked with SHARP new heating system with high speed hot air. Follow the direction below and interactive display.

Caution:

The oven cabinet, cavity, door, turntable, turntable support, rack and dishes will become hot. To PREVET BURNS, use thick oven gloves when removing the food or turn table.

BASIC COOK

There are 84 preprogrammed basic foods, grilled, baked or roasted. There are 9 food categories. Please see the chart on page XX.

- Suppose you want to roast 5.0 lb. chicken.

PROCEDURE		
1	Touch **BASIC COOK** pad 2 times to select POULTRY category. ~~POLTRY~~ POULTRY lamp is light.	BASIC COOK x 2
2	Touch UP /DOWN pads and select desired food. (Ex. Touch UP pad 3 times to select WHOLE CHICKEN.)	or
3	Touch desired number pad to select quantity. (Ex : touch 5 and 0 for 5.0 lb.)	5 0
4	Touch **START** pad.	START

NOTE:

1. At step 3, you don't have to enter weight or qty for some foods. For some food, you have to select 1 level or 2 levels cooking. Please follow the interactive display as each cooking.
2. Interactive display advise if you should use a high rack or low rack. You can also know a suitable cooking container when you press the CUSTOM HELP during the ~~LED~~ CUSTOM HELP lamp is flashing.
3. You can adjust cooking time as you like. See COOKING TIME ADJUSTMENT on page XX.
4. If you attempt to enter more or less than the allowed amount as indicated in chart, and error message will appear in the display.
5. Food can be selected also by using food # directly in the chart, same as RECIPES. See the RECIPE operation on page XX.
6. Please use the recommended container in the chart and interactive display. During cooking, some metal baking utensils may cause arching when they came in contact with the turntable, oven walls or accessory racks. Arching is a discharge of electricity that occurs when microwaves come in contact with metal. If arching is occurs, place a heat resistant dish (Pyrex pie plate, glass pizza dish or dinner plate between the pan and the turntable or rack. If arching occurs with other metal baking utensils, discontinue their use for cooking.

BASIC COOK CHART

MEATS

Number	BEEF		Amount		Rack	Container	Splash guard
1	Frankfurters		1 - 6	pieces	low	pizza pan	
2	Hamburgers 1/4 pound each	medium, well	2 - 6	pieces	low		yes
3	Meat loaf		1 - 2	pounds		glass loaf dish	
4	Roast tender cut boneless	rare, medium	2.5 - 4	pounds	low		yes
5	Steaks, bone-in 1 inch thick	rare, medium	1 - 3	pounds	low		yes
6	Steaks, boneless 1 inch thick	rare, medium	.5 - 2	pounds	low		yes

Number	LAMB		Amount		Rack	Container	Splash guard
7	Chops, bone-in 3/4-1"	medium	.5 - 1.5	pounds	low		yes
8	Roast, boneless	medium	2.5 - 4	pounds	low		yes

Number	PORK		Amount		Rack	Container	Splash guard
9	Chops, bone-in 1/2-3/4"		.5 - 2	pounds	low		yes
10	Chops, boneless 1"		.3 - 2	pounds	low		yes
11	Roast, loin boneless		2 - 3.5	pounds	low		yes
12	Roast, tenderloin		1.2 - 2	pounds		pizza pan	
13	Sausage		.3 - 1	pound	low	pizza pan	
14	Smoked ham slice		1	slice	low		yes

POULTRY

Number	CHICKEN		Amount		Rack	Container	Splash guard
15	Breasts, boneless		.5 - 2	pounds	low		yes
16	Pieces, bone-in		.5 - 3	pounds	low		yes
17	Whole		2.5 - 7	pounds	low		yes

Number	CONVENIENCE CHICKEN		Amount		Rack	Container	Splash guard
18	Nuggets, frozen	1 level	.3 - 1.3	pounds		pizza pan	
		2 levels	1.4 - 2	pounds	high	2 pizza pans	
19	Nuggets, refrigerated	1 level	.3 - 1.3	pounds		pizza pan	
		2 levels	1.4 - 2	pounds	high	2 pizza pans	
20	Patties, frozen	1 level	.3 - 1.3	pounds		pizza pan	
		2 levels	1.4 - 2	pounds	high	2 pizza pans	
21	Patties, refrigerated	1 level	.3 - 1.3	pounds		pizza pan	
		2 levels	1.4 - 2	pounds	high	2 pizza pans	
22	Pieces, bone-in frozen	1 level	.5 - 1.5	pounds		pizza pan	
		2 levels	1.6 - 3	pounds	high	2 pizza pans	
23	Tenders, frozen	1 level	.3 - 1.3	pounds		pizza pan	
		2 levels	1.4 - 2	pounds	high	2 pizza pans	
24	Tenders, refrigerated	1 level	.3 - 1.3	pounds		pizza pan	
		2 levels	1.4 - 2	pounds	high	2 pizza pans	
25	Wings, frozen	1 level	.5 - 2	pounds		pizza pan	
		2 levels	2.1 - 3	pounds	high	2 pizza pans	
26	Wings, refrigerated	1 level	.5 - 2	pounds		pizza pan	
		2 levels	2.1 - 3	pounds	high	2 pizza pans	

Number	TURKEY		Amount		Rack	Container	Splash guard
27	Breast, bone-in		3 - 6	pounds	low		yes
28	Breast, boneless		1.5 - 3	pounds	low		yes

FISH / SEAFOOD

Number	Food		Amount		Rack	Container	Splash guard
29	Fillets		.3 - 1.5	pounds	high	pizza pan	
30	Pieces, prepared frozen	1 level	.3 - 1.5	pounds		pizza pan	
		2 levels	1.6 - 2.5	pounds	high	2 pizza pans	
31	Shellfish		.3 - 1.5	pounds	high	pizza pan	
32	Steaks 1"		.5 - 1.5	pounds	low		
33	Sticks, prepared frozen	1 level	.3 - 1.3	pounds		pizza pan	
		2 levels	1.4 - 1.5	pounds	high	2 pizza pans	

CASSEROLES

Number	Food		Amount	Rack	Container	Splash guard
34	Baked	1 level	1		8-inch square dish	
35	Lasagna	2 levels	2	high	2 8-inch square dishes	
36	Macaroni & Cheese	1 level	1		8-inch square dish	
		2 levels	2	high	2 8-inch square dishes	
37	Real baked potatoes		1 - 4		pizza pan	

PIZZA

Number	Food	Amount	Rack	Container	Splash guard
38	Boboli	1 pizza	low		
39	Deli fresh	1 pizza	high		
40	Pizza crust, from a mix	1 pizza	low	pizza pan	
41	Pizza crust, refrigerated	1 pizza	low	pizza pan	
42	Regular crust, frozen	1 pizza	low		
43	Reheat, refrigerated leftover	1 - 4 slices	low		
44	Rising crust, frozen	1 pizza	high		

APPETIZER SNACKS FROZEN

Number	Food		Amount	Rack	Container	Splash guard
45	Bagel bites		7 - 14 ounces	low	pizza pan	
46	Burritos or Chimichangas		1 - 4 pieces		pizza pan	
47	Cheese sticks		8 - 10 ounces	low	pizza pan	
48	Corn dogs		1 - 6 pieces		pizza pan	
49	Eggplant sticks		6 - 10 ounces	low	pizza pan	
50	Egg rolls		1 - 4 pieces		pizza pan	
51	French fries	1 level	.3 - 1 pound	high	pizza pan	
		2 levels	2 pounds	high	2 pizza pans	
52	Hash brown potato patties	1 level	1 - 6 patties	high	pizzapan	
		2 levels	12 patties	high	2 pizza pans	
53	Mini egg rolls		6 - 8 ounces	low	pizza pan	
54	Mini tacos		10 - 12 ounces	low	pizza pan	
55	Onion rings	1 level	.3 - .6 pounds	high	pizza pan	
		2 levels	.7 - 1 pounds	high	2 pizza pans	
56	Pocket sandwiches		1 - 4 pieces		pizza pan	
57	Sausage & biscuits		2 - 6 pieces		pizza pan	
58	Taquitos		24 ounces	low	pizza pan	
59	Tater tots	1 level	.3 - 1 pound		pizza pan	
		2 levels	2 pounds	high	2 pizza pans	
60	Toasted raviolis		12 - 15 ounces	low	pizza pan	

PIES

Number	Food	Amount	Rack	Container	Splash guard
61	Cobbler, frozen	1	low	metal pan	
62	Pie crust in glass dish	1		glass pie plate	
63	Pie crust in metal pan	1		metal pie pan	
64	Pie, frozen fruit	1	low	metal pie pan	

DESSERTS

Number	Food	Amount	Rack	Container	Splash guard
65	Brownies from a mix	2 levels	high	2 8-inch square pans	
66	Cookies, frozen bake at 350F	1 - 2 levels	1 level on low rack 2 levels on turntableand high rack	pizza pan	
67	Cookies, frozen bake at 375F	1 - 2 levels		pizza pan	
68	Cookies, refrigerated bake at 325F	1 - 2 levels		pizza pan	
69	Cookies, refrigerated bake at 350F	1 - 2 levels		pizza pan	

CAKES / BREADS

Number	CAKE	Amount	Rack	Container	Splash guard
70	Angel food cake from a mix	1		tube pan	
71	Bundt from a mix bake at 350F	1	low	Bundt pan	
72	Bundt from a mix bake at 375F	1	low	Bundt pan	
73	Layer from a mix	1 - 2 layers	1 layer on turntable and 2 layers on turntable and high rack	8-inch pans	
74	Cupcakes from a mix	2 levels	high	2 6-cup muffin pans	

Number	QUICK BREAD	Amount	Rack	Container	Splash guard
75	Biscuits from a mix	1 level	low	pizza pan	
76	Biscuits, frozen	1 - 2 levels	1 level on low rack 2 levels on turntable and high	pizza pan	
77	Biscuits, refrigerated	1 - 2 levels		pizza pan	
78	Crescent rolls, refrigerated	1 package		pizza pan	
79	Loaf from a mix	1 loaf		loaf pan	
80	Muffins from a mix	2 levels	high	2 6-cup muffin pans	
81	Sweet rolls, refrigerated	1 package	low	pizza pan	
82	Breadsticks, refrigerated	1 package	high	2 pizza pans	
83	Garlic loaf, frozen	10 ounces		pizza pan	
84	Loaf, refrigerated	1 layers		pizza pan	

RECIPES

There are 100 great recipes in SHARP HIGH SPEED CONVECTION COOK BOOK, All recipes are preprogrammed in this oven with SHARP new technology with high speed hot air, so you can get prefect result in a shorter time, by using this key. Please see the chart on page XX and follow the direction in the SHARP COOK BOOK.

- Suppose you want to cook Deluxe roasted chicken (food # 20).

PROCEDURE

1	Touch **RECIPE** pad once. (You can also select food from category according to interactive display. At this time, disregard the interactive display and move on Step 2 below.)	RECIPES
2	Enter desired food # in the chart. (Ex. Touch [2] and [0] to select DELUXE ROASTED CHICKEN.)	
3	Touch **ENTER** pad.	ENTER
4	Touch **START** pad.	START

NOTE:

1. Interactive display advise if you should use a high rack or low rack. You can also know a suitable cooking container when you press the CUSTOM HELP during the LED is flashing.
2. You can adjust cooking time as you like. See COOKING TIME ADJUSTMENT on page 26.
3. If you attempt to enter wrong food # as indicated in chart, and error message will appear in the display.
4. Food can be selected also from food category and up /down pads, same as BASIC COOK. See the BASIC COOK operation on page 13.
5. Please use the recommended container in the cook book and interactive display. During cooking, some metal baking utensils may cause arching when they came in contact with the turntable, oven walls or accessory racks. Arching is a discharge of electricity that occurs when microwaves come in contact with metal.
   If arching is occurs, place a heat resistant dish (Pyrex pie plate, glass pizza dish or dinner plate between the pan and the turntable or rack. If arching occurs with other metal baking utensils, discontinue their use for cooking.

RECIPES

MEATS

Number	Food		Rack	Container	Splash guard
1	Apricot pork roast		low rack		in
2	Barbecued Steaks		low rack		in
3	Beef and Bean Wheels		low rack	pizza pan	
4	Chinese Pork Chops		low rack	10" square casserole	
5	Crispy Franks		low rack	pizza pan	
6	Glazed Ham Slice		low rack	10" squarecasserole	
7	Glazed Veal Chops		low rack	10" squaredish	
8	Heavenly Hamburgers		low rack		in
9	Pork Tenderloin with Herbs			pizza pan	
10	Meat Loaf Surprise			9x5 glass loaf dish	
11	Oriental Flank Steak		low rack		in
12	Sour Cream Burgers		low rack		in
13	Spareribs With Plum Glaze		low rack	10" square casserole (1-2 stage)	in (3-4 stage)
14	Steak Kabobs		low rack		in
15	Sweet and Sour Lamb Chops		low rack	2qt casserole	
16	Zesty Pork Tenderloin			pizza pan	

POULTRY

Number	Food		Rack	Container	Splash guard
17	Apple Turkey Breast		low rack	8" square glass dish	
18	Caribbean Chicken Breasts		low rack		in
19	Crunchy Garlic Chicken		low rack	3qt casserole	
20	Deluxe Roasted Chicken		low rack		in
21	Herb Grilled Chicken		low rack		in
22	Honey Mustard Drumsticks	spread sauce on chicken	low rack		in
23	Mustard and Mayo Chicken	spread sauce on chicken	low rack		in
24	Onion Chicken Fingers		low rack	pizza pan	
25	Roasted Turkey Breast		low rack		in
26	Savory Roast Chicken		low rack		in
27	Sesame Oven-Fried Chicken		low rack	pizza pan	in
28	Stuffed Chicken Breasts		no	8" square glass dish	

FISH / SEAFOOD

Number	Food		Rack	Container	Splash guard
29	Fish Steaks with Herbs		low rack	pizza pan	
30	Italian Shrimp		high rack	pizza pan	
31	Lemon Buttered Sole		low rack	casserole	
32	Old Bay Grilled Fish		high rack	pizza pan	
33	Pineapple Salsa Swordfish		low rack	pizza pan	
34	Salmon with Basil Sauce	add sauce	low rack	pizza pan	
35	Salmon with Tomatoes	spread sauce	low rack	10" casserole	
36	Savory Baked Fish		high rack	pizza pan	
37	Scallop Kabobs		high rack	pizza pan	
38	Shrimp de Jonghe		low rack	10" quichedish	
39	Spicy Shrimp		high rack	pizza pan	
40	Teriyaki Fish Fillets		high rack	pizza pan	

CASSEROLES

Number	Food			Rack	Container	Splash guard
41	Baked Shrimp Salad			low rack	9" glass pie plate	
42	Chicken Linguine Casserole	1 level			8" square glass dish	
43	Citrus Treasure Fish			low rack	2.5qt casserole	
44	Crustless Chicken Quiche			low rack	9" glass pie plate	
45	Grilled Vegetables	2 levels		high rack	pizza pan	
46	Macaroni & Blue Cheese				8" square glass dish	
47	Mexicali Corn Pudding			low rack	10" square glass dish	
48	Mushroom Lasagna	2 levels		high rack	8" square glass dish	
49	Party Roasted Potatoes			low rack	pizza pan	
50	Pasta with Squash and Shallots			low rack	pizza pan	
51	Stuffed Peppers				10" casserole	
52	Tamale Casserole				2qt casserole	

PIZZA

Number	Food			Rack	Container	Splash guard
53	Brie & Cramberry Pizza		add topping	low rack	pizza pan	
54	Chewy Pizza Bread			low rack	8" square glass dish	
55	Grecian Potato pizza			low rack	pizza pan	
56	Hail caesar pizza			low rack	pizza pan	
57	Hawaiian Barbeque Pizza			low rack		
58	Pesto pizza			low rack	pizza pan	

APPETIZER AND SNACKS

Number	Food			Rack	Container	Splash guard
59	Artichoke Crab Spread			low rack	9" glass pie plate	
60	Bean and Cheessey Dip				9" glass pie plate	
61	Buffalo Chicken Wings			low rack	pizza pan	
62	Cheesy Spinach Nuggets	2 levels		high rack	pizza pan	
63	Grilled Portabella Appetizer			low rack		
64	Pistachio Camembert Tart				pizzapan	
65	Rosy Baked Brie			low rack	flat glass dish	
66	Smoky Pigs in Blankets	2 levels		high rack	pizza pan	
67	Spicy Appetizer Nuts			low rack	pizza pan	
68	Veggie Nachos			low rack	Quiche Dish	

PIES / PASTRY

Number	Food			Rack	Container	Splash guard
69	Apple Berry Pie				9" glass pie plate	
70	Caramel Pecan Pie			low rack	9" glass pie plate	
71	Coconut Oatmeal Pie			low rack	9" glass pie plate	
72	Cracker Pie			low rack	9" glass pie plate	
73	Fresh Fruit Tart			low rack	pizza pan	
74	Fudge Brownie Pie			low rack	9" glass pie plate	
75	Graham Cracker Pie			low rack	9" glass pie plate	
76	Pear Praline Pie			low rack	9" glass pie plate	

DESSERTS

Number	Food			Rack	Container	Splash guard
77	Autumn Treasure Cookies 1st set	2 layers	waiting for 2nd set of cookies	high rack	pizza pan	
	continued 2nd set	2 layers	If the initial oven temperature	high rack	pizza pan	
78	Baked Apples Imperial				2qt casserole	
79	Brownie Pizza				pizza pan	
80	Carousel Crackles 1st set	2 layers	waiting for 2nd set of cookies		pizza pan	
	continued 2nd stage	2 layers	If the initial oven temperature		pizza pan	
81	Cookie Apple Cobbler				8" square glass dish	
82	Gingered Peach and Pear Crisp				quiche dish	
83	Maple Bread Pudding				8" square glass dish	
84	Pumpkin Bars	2 levels			8" square pan	

CAKES / BREADS

Number	Food			Rack	Container	Splash guard
85	Banana Apricot Bran Bread			Low rack	loaf dish	
86	Banana Carrot Muffins	2 levels		high rack	6 cups muffin pans x2	
87	Banana Streusel Loaf				metal loaf pan	
88	Blueberry Monkey Bread			Low rack	8" square glass dish	
89	Cinnamon Date Scones			high rack	pizza pan	
90	Cinnamon Swirl Pound Cake			Low rack	Tube pan, Glass pie plate	
91	Classic Cheesecake			Low rack	Glass cake dish	
92	Classic Cranberry Tea Cake			Low rack	Bundt pan, Glass pie plate	
93	Green Onion Biscuits	1 level			pizza pan	
94	Herb Biscuits	2 levels		high rack	pizza pan	
95	No Knead Cheddar Dill Bread	1 level		Low rack	9" cake pan	
96	Nut Cake with Mocha Cream	2 levels		high rack	9" cake pan	
97	Quick Sticky Rolls	1 level		Low rack	8" cake pan	
98	Very Berry Bundt Cake			Low rack	Bundt pan, Glass pie plate	
99	Yummy Blueberry Muffins	2 level		high rack	6 cups pan x 2	
100	Zucchini Muffins	2 level		high rack	6 cups pan x 2	

MICROWAVE OPTIONS

There are 15 microwave cooking settings, including popcorn, reheating, cooking and defrosting.

POPCORN

The popcorn setting automatically provides the correct cooking time for most brands of microwave popcorn. See the chart below.

- Suppose you want to pop a 3.5 oz bag of regular popcorn.

PROCEDURE	
1 Touch **POPCORN** once.	POPCORN

UP /DOWN

2 Select desired type of popcorn by touching ~~ARROW~~ pads.	or
3 Touch **START** pad.	START

Popcorn can be programmed with More or Less Time adjustment. See page 26.

POPCORN CHART

FOOD	AMOUNT	PROCEDURE
POPCORN	1 bag	Try several brands to decide which is most acceptable for your taste. Unfold bag and place in oven according to directions.
	3.5 oz bag (Regular)	Touch **POPCORN** pad once and ~~ARROW~~ pads until **REGULAR 3.0 OZ** is displayed.
	2.85 - 3.5 oz bag (Regular Light)	Touch **POPCORN** pad once and ~~ARROW~~ pads until **REGULAR LIGHT 2.85 - 3.5 OZ** is displayed.
	1.5 - 1.75 oz (Snack)	Touch **POPCORN** pad once and ~~ARROW~~ pads until **SNACK 1.5 - 1.75 OZ** is displayed.

REHEAT / COMPU COOK

Reheat and Compu Cook automatically compute the correct warming or cooking time and microwave power level for foods shown in the chart below.

- Suppose you want to reheat 2 cups of soup.

PROCEDURE		
1	Touch **REHEAT** once.	REHEAT
2	Select desired food by touching ~~**ARROW**~~ pads **UP** / **DOWN**	or
3	Touch desired number pad to select quantity. (Ex: Touch 2 for 2 cups.)	2
4	Touch **START** pad.	START

NOTE:

1. To reheat or cook other food or foods above or below the quantity allowed on the Reheat Chart or Compu Cook Chart, cook manually.
2. Reheat and Compu Cook can be programmed with More or Less Time Adjustment. Touch **POWER LEVEL** once or twice before touching **START**. See page 26.

COMPU COOK CHART

FOOD	AMOUNT	PROCEDURE
1. Baked Potatoes	1 - 4 med.	Pierce with fork in several places. Place on paper towel on turntable. After cooking, remove from oven and let stand wrapped in foil for 5 to 10 minutes.
2. Fresh Vegetables	1 - 4 cups	For beans, carrots, corn and peas, add 1 tablespoon of water per cup. For broccoli, Brussel sprouts, cabbage and cauliflower, cook immediately after washing with no additional water. If you like tender crisp vegetables, double measured quantity per setting. For example, use 2 cups cauliflower and program for 1 cup. After cooking, remove from oven, stir, cover and let stand 3 to 5 minutes before serving.
3. Frozen Entrees	6 - 17 oz.	Use for frozen, convenience foods. It will give satisfactory results for most brands. You may wish to try several and choose your favorite. Remove package from outer wrapping and follow package directions for covering. After cooking, let stand covered for 1 to 3 minutes.
4. Frozen Vegetables	1 - 4 cups	Add no water. Cover with lid or plastic wrap. After cooking, stir and let stand, covered, for 3 minutes.
5. Ground Meat	.5 - 1.5 lb	Use this setting to cook ground beef or turkey as patties or in a casserole to be added to other ingredients. Place patties on a microwave-safe rack and cover with wax paper. Place ground meat in a casserole and cover with wax paper or plastic wrap. When oven stops, turn patties over or stir meat in casserole to break up large pieces. Re-cover and touch **START** pad. After cooking, let stand, covered for 2 to 3 minutes.

REHEAT CHART

FOOD	AMOUNT	PROCEDURE
1. Beverage	.5 - 2 cup	This setting is good for restoring cooled beverage to a better drinking temperature. Stir after heating. You can reheat 0.5 cup, 1 cup, 1.5 cups and 2 cups beverage by touching number pad 4.
2. Casserole	1 - 4 cups	Use to reheat refrigerated canned or homemade pasta with sauce or other cooked casserole. For room temperature pasta or casserole, use Less option. For pasta without sauce double the quantity per setting. For example, measure 2 cups of cooked noodles and program for 1 cup. Cover with lid or plastic wrap. After cooking, stir and let stand, covered, 2 to 3 minutes.
3. Dinner Plate	1 plate	Use to reheat precooked foods from the refrigerator. Place meaty portions and bulky vegetables to outside of plate. Cut large items like baked potatoes in smaller pieces. Flatten foods such as mashed potatoes and other dense foods. Cover with wax paper or plastic wrap. ONE PLATE ONLY. After cooking, check that food is very hot throughout and that the bottom center of the plate is very hot. If not, continue heating using time and power level. Allow to stand, covered, 1 to 2 minutes.
	1 Regular	Touch **REHEAT** pad once and **ARROW** pads until **DINNER PLATE REGULAR** is displayed. A regular amount of food: approximately 4 oz. sliced meat or poultry, 1/2 cup potato or rice and 1/2 cup of vegetables or equivalent. REG will appear in the display.
4. Fresh Rolls/Muffins	1 - 6 pcs.	Use to warm rolls, muffins, biscuits, bagels etc. Large item should be considered as 2 regular size. Cover each roll/muffin with paper towel. For refrigerated rolls or muffins, it may be necessary to double the entered amount to ensure the proper serving temperature. For example, enter quantity of 2 for 1 refrigerated muffin.
5. Soup	1 - 4 cups	Place in bowl or casserole. Cover with lid or plastic wrap. At end, stir, re-cover and let stand 1 to 3 minutes.

COMPU DEFROST

CompuDefrost automatically defrost ground meat, steaks, chops, fish and poultry.

• Suppose you want to defrost a 2.0 lb steak.

PROCEDURE	
1 Touch **COMPU DEFROST** pad.	COMPU DEFROST
2 Select desired food by touching ~~ARROW~~ pads. UP /DOWN	or
3 Enter weight by touching the number pads 2 and 0. (Ex. 2.0 lbs steak)	2 0
4 Touch **START** pad.	START
The oven will stop so that the food can be checked.	
5 After the 1st stage, open the door. Turn steak over and shield any warm portions. Close the door. Touch **START** pad.	
6 After the 2nd stage, open the door. Shield any warm portions. Close the door. Touch **START** pad.	
7 After defrost cycle ends, cover and let stand as indicated in chart below.	

NOTE:

1. If you attempt to enter more or less than the allowed amount (0.5-3.0 lbs), ERROR will appear in the display.
2. CompuDefrost can be programmed with More or Less Time Adjustment. Touch **POWER LEVEL** once or twice before touching **START**. See page26 .
3. To defrost other foods or foods above or below the weights allowed on CompuDefrost Chart below, use time and 30% power. See Manual Defrost on page 25.

COMPU DEFROST CHART

FOOD	AMOUNT	PROCEDURE
1. Bone-in Poultry	.5 - 3.0 lbs	Arrange pieces with meatiest portions toward outside of glass dish or microwave safe rack. After each stage, if there are warm or thawed portions, rearrange or remove. Let stand, covered, for 10 to 20 minutes.
2. Boneless Poultry	.5 - 2.0 lbs	Use boneless breast of chicken or turkey. After each stage, if there are warm or thawed portions, rearrange or remove. Let stand, covered, for 10 to 20 minutes.
3. Ground Meat	.5 - 2.0 lbs	Remove any thawed pieces after each stage. Let stand, covered, 5 to 10 minutes.
4. Steaks/Chops	.5 - 3.0 lbs	After each stage of defrost cycle, rearrange and if there are warm or thawed portions, shield with small flat pieces of aluminum foil. Remove any meat or fish that is nearly defrosted. Let stand, covered, 10 to 20 minutes.

NOTE: Check foods when oven signals. After final stage, small sections may still be icy. Let stand to continue thawing. Do not defrost until all ice crystals are thawed.
Shielding prevents cooking from occurring before the center of the food is defrosted. Use small smooth strips of aluminum foil to cover edges and thinner sections of the food.

MANUAL DEFROST

If the food that you wish to defrost is not listed on the COMPU DEFROST CHART or is above or below the limits in the "Amount" column on the COMPU DEFROST CHART, you need to defrost manually.

You can defrost any frozen food, either raw or previously cooked, by using 30% Power Level. See page 9. Estimate defrosting time and touch **POWER LEVEL** pad 8 times for 30% when you select the power level.

For either raw or previously cooked frozen food the rule of thumb is approximately 4 minutes per pound. For example, defrost 4 minutes for 1 pound of frozen spaghetti sauce.

Always stop the oven periodically to remove or separate the portions that are defrosted. If food is not defrosted at the end of the estimated defrosting time, program the oven in 1 minute increments at 30% until totally defrosted.

When using plastic containers from the freezer, defrost only long enough to remove from the plastic in order to place in a microwave-safe dish.

OTHER CONVENIENT FEATURES

DEMONSTRATION MODE

To demonstrate, touch **CLOCK**, the number 0 pad and touch **START** pad and hold for 3 seconds. ~~DEMO~~ ~~ON~~ DEMO ON will appear in the display. Cooking operations and specific special features can now be demonstrated with no power in the oven. For example, touch **MINUTE PLUS** pad and the display will show 1:00 and count down quickly to ~~END~~ END.

To cancel, touch **CLOCK**, then the number 0 and **STOP/CLEAR** pads. If easier, unplug the oven from the electrical outlet and replug.

AUTOMATIC COOKING TIME ADJUSTMENT

The cooking results are slightly different depend on room temperature, initial food temperature and other factors. You can adjust cooking results as you like.

MORE / LESS TIME ADJUSTMENT

Should you discover that you like any of the AUTOMATIC COOKING slightly **more** done, touch the **POWER LEVEL** pad **once** after touching your choice of pads.

The display will show ~~MORE~~. MORE

Should you discover that you like any of the AUTOMATIC COOKING slightly **less** done, touch the **POWER LEVEL** pad **twice** after touching your choice of pads.

The display will show ~~LESS~~. LESS

The **POWER LEVEL** pad must be touched within 1 second of touching your choice of pads.

EXTEND DURING COOKING

MINUTE PLUS can be added up to 10 minutes during cooking. You just touch **MINUTE PLUS** pad repeatedly to extend cooking time in multiples of 1 minutes. Please check carefully the cooking doneness during cooking. If the cooking result is good, stop the oven.

TIMER

- Suppose you want to time a 3-minute long distance phone call.

PROCEDURE		
1	Touch **TIMER** pad and number pad 1.	TIMER/CLOCK 1
2	Enter time.	3 0 0
3	Touch **TIMER** pad again.	TIMER/CLOCK

MULTIPLE SEQUENCE COOKING

The oven can be programmed for up to 4 automatic cooking sequences for the microwave mode and 2 automatic cooking sequences with preheat for convection switching from one power level setting to another automatically.

Sometimes cooking directions tell you to start on one power level and then change to a different power level. Your oven can do this automatically.

- Suppose you want to cook roast beef for 5 minutes at 100% and then continue to cook for 30 minutes at 50%.

PROCEDURE		
1	First touch **POWER LEVEL** pad once for 100% power. Then enter cooking time.	POWER LEVEL x 1 5 0 0
2	Touch **POWER LEVEL** pad 6 times for 50% power. Then enter second cooking time.	POWER LEVEL x 6 3 0 0 0
3	Touch **START** pad.	START

NOTE:

1. If **POWER LEVEL** pad is touched once, **HIGH POWER** will be displayed.
2. ~~If you wish to know power level, simply touch the **POWER LEVEL** pad. As long as your finger is touching the **POWER LEVEL** pad, the power level will be displayed.~~

CUSTOM HELP

Custom Help provides 4 features which make using your oven easy because specific instructions are provided in the interactive display.

1. CHILD LOCK

The Child Lock prevents unwanted oven operation such as by small children. The oven can be set so that the control panel is deactivated or locked. To set, touch **CUSTOM HELP**, the number 1 and then touch the **START** pad. Should a pad be touched, **CHILD LOCK ON** will appear in the display.

To cancel, touch **CUSTOM HELP** and **STOP/CLEAR** pads.

2. AUDIBLE SIGNAL ELIMINATION

If you wish to have the oven operate with no audible signals, touch **CUSTOM HELP**, the number 2 and then touch **STOP/CLEAR** pad.

To cancel and restore the audible signal, touch **CUSTOM HELP**, the number 2 and then touch the **START** pad.

3. AUTO START

If you wish to program your oven to begin cooking automatically at a designated time of day, follow this procedure:

- Suppose you want to start cooking a stew for 20 minutes on 50% at 4:30. Before setting, check to make sure the clock is showing the correct time of day.

PROCEDURE		
1	Touch **CUSTOM HELP** pad.	CUSTOM HELP
2	Touch number 3.	3
3	Enter the start time.	4 3 0
4	Touch **CLOCK** pad.	TIMER/CLOCK
5	Enter cooking program.	POWER LEVEL x 6 2 ~~3~~ 0 0 0
6	Touch **START** pad.	START

NOTE:

1. Auto Start can be used for manual cooking if clock is set.
2. If the oven door is opened after programming Auto Start, it is necessary to touch the **START** pad for Auto Start time to appear in the readout so that the oven will automatically begin programmed cooking at the chosen Auto Start time.
3. Be sure to choose foods that can be left in the oven safely until the Auto Start time. Acorn or butternut squash are often a good choice.
4. If you wish to know the time of day, simply touch the **CLOCK** pad. As long as your finger is touching the **CLOCK** pad, the time of day will be displayed.

4. REFRESH CYCLE

Before the first use and after cleaning, the heater must be conditioned. Please use this key and follow the procedure below.

This oven have a special catalyst to reduce some smoke and odor. To keep a catalyst the best condition, it should be refreshed sometimes. If you feel nasty odor, please use this key and refresh catalyst.

PROCEDURE		
1	Touch **CUSTOM HELP** pad.	CUSTOM HELP
2	Touch number 4.	4
3	Touch **START** pad.	START

NOTE:

1. When the refresh cycle is used, do not put turntable and food in the oven.
2. Refresh cycle will be in 30 minutes.
3. During the refresh cycle, some smoke and odor will occur. Therefore open the windows or run the ventilation fan in the room.

CAUTION:

The oven door, outer cabinet, turntable and oven cavity will be hot. Pay attention to avoid burns when cooling the oven.

HELP

You can get a useful information when a LED of CUSTUM HELP pad is flashing.
If you wish to check, touch CUSTOM HELP pad whenever the LED CUSTOM HELP lamp is flashing.

MINUTE PLUS

Minute Plus allows you to cook for a minute at 100% by simply touching the **MINUTE PLUS** pad. You can also extend cooking time in multiples of 1 minute by repeatedly touching the **MINUTE PLUS** pad during manual cooking.

- Suppose you want to heat a cup of soup for one minute.

PROCEDURE		
1	Touch **MINUTE PLUS** pad.	MINUTE PLUS

NOTE:

To use Minute Plus, touch pad within 3 minutes after cooking, closing the door or touching the **STOP/ CLEAR** pad.

CLEANING AND CARE

Disconnect the power cord before cleaning or leave the door open to inactivate the oven during cleaning.

Exterior

The outside surface is precoated metal and plastic. Clean the outside with mild soap and water; rinse and dry with a soft cloth. Do not use any type of household or abrasive cleaner.

Door

Wipe the window on both sides with a damp cloth to remove any spills or spatters. Metal parts will be easier to maintain if wiped frequently with a damp cloth. Avoid the use of spray and other harsh cleaners as they may stain, streak or dull the door surface.

Touch Control Panel

Wipe the panel with a cloth dampened slightly with water only. Dry with a soft cloth. Do not scrub or use any sort of chemical cleaners. Close door and touch **STOP/CLEAR** pad.

Interior - after microwave cooking.

Cleaning is easy because no heat is generated to the interior surfaces; therefore, there is no baking and setting of spills or spattering. To clean the interior surfaces, wipe with a soft cloth and warm water. DO NOT USE ABRASIVE OR HARSH CLEANERS OR SCOURING PADS. For heavier soil, use mild soap; rinse thoroughly with hot water. NEVER SPRAY OVEN CLEANERS DIRECTLY ONTO ANY PART OF THE OVEN.

Interior - after ~~convection, fmix or broil cooking.~~ manual/automatic speed cookings or convection cooking

Spatters may occur because of moisture and grease. Wash immediately after use with hot, soapy water. Rinse and polish dry. Harder to remove spatters may occur if oven is not thoroughly cleaned or if there is long time/high temperature cooking. If so, you may wish to purchase an oven cleaner pad with liquid cleaner within it--not a soap filled steel pad--for use on stainless or porcelain surfaces.
Follow manufacturer's directions carefully and be especially cautious not to get any of the liquid cleaner in the perforations on the wall or ceiling or any door surfaces.
Rinse thoroughly and polish dry.
After cleaning the interior thoroughly, residual grease may be removed from the interior ducts and heaters by simply operating the oven ~~on 450°F. for 20 minutes without food~~. Ventilate the room if necessary. NEVER SPRAY OVEN CLEANERS DIRECTLY ONTO ANY PART OF THE OVEN.

Waveguide Cover

The waveguide cover is made from mica so requires special care. Keep the waveguide cover clean to assure good oven performance. Carefully wipe with a damp cloth any food spatters from the surface of the cover immediately after they occur. Built-up splashes may overheat and cause smoke or possibly catch fire. Do not remove the waveguide cover.

Odor Removal

Occasionally, a cooking odor may remain in the oven. To remove, combine 1 cup water, grated peel and juice of 1 lemon and several whole cloves in a 2-cup glass measuring cup. Boil for several minutes using 100% power. Allow to set in oven until cool. Wipe interior with a soft cloth.

Accessories

The turntable, turntable support, racks and splash guard can be removed for easy cleaning. Wash them in mild, sudsy water; for stubborn stains use a mild cleanser and a non-abrasive scouring sponge. They are also dishwasher-proof. Use upper rack of dishwasher for turntable support.
Foods with high acidity, such as tomatoes or lemons, will cause the porcelain enamel turntable and splash guard to discolor. Do not cook highly acidic foods directly on the turntable; if spills occur, wipe up immediately.

2. After cooking, the cooling fan may switch on to cool the oven cavity. When the cooling fan works, the display may show "NOW COOLING" and you may hear the sound of the cooling fan.

SERVICE CALL CHECK

Please check the following before calling for service:

1. Place one cup of water in a glass measuring cup in the oven and close the door securely. Operate the oven for one minute at HIGH 100%.
   - A Does the oven light come on? YES _____ NO _____
   - B Does the cooling fan work? (Put your hand over the rear ventilating openings.) YES _____ NO _____
   - C Does the turntable rotate? (It is normal for the turntable to turn in either direction.) YES _____ NO _____
   - D Is the water in the oven warm? YES _____ NO _____
2. Remove water from the oven and operate the oven for 5 minutes at CONV 450° F.
   - A Do CONV and COOK indicators light? YES _____ NO _____
   - B After the oven shuts off, is inside of the oven hot? YES _____ NO _____

If "NO" is the answer to any of the above questions, please check electrical outlet, fuse and/or circuit breaker. If they are functioning properly, CONTACT YOUR NEAREST SHARP AUTHORIZED SERVICER. A microwave oven should never be serviced by a "do-it-yourself" repair person.

NOTE: 1. If time appearing in the display is counting down very rapidly, check Demonstration Mode on page ~~16~~ 26 and cancel.

SPECIFICATIONS

AC Line Voltage:	Single phase 240V, 60Hz, AC only
AC Power Required:	1700W 7.5 amps. (Microwave) 3200W 13.0 amps. (Convection) **3200W 13.5 amps. (Speed Cooking)**
Output Power:	
Microwave	1000W★ (IEC Test Procedure)
Top Heater	1700W
Side Heater	1200W
Frequency:	2450 MHz
Outside Dimensions:	21 5/8"(W) x 16"(H) x 24 1/4"(D)
Cavity Dimensions:	16 1/8"(W) x 8 3/8"(H) x 13 5/8"(D)
Oven Capacity:	1.1 Cu.Ft.
Cooking Uniformity:	Turntable system
Weight:	Approx. 86 lb

★ The International Electrotechnical Commission's standardized method for measuring output wattage. This test method is widely recognized.

In compliance with standards set by:

FCC – Federal Communications Commission Authorized.

DHHS – Complies with Department of Health and Human Services (DHHS) rule, CFR, Title 21, Chapter I, Subchapter J.

– This symbol on the nameplate means the product is listed by Underwriters Laboratories, Inc.