SHARP®

MICROWAVE OVEN OPERATION MANUAL

Carousel®

MODEL

R-310H

followed by letter indicating color
K=black, W=white

CONTENTS

- Precautions to Avoid Possible Exposure to Excessive Microwave Energy ..... Inside Front Cover
- For Customer Assistance ... Inside Front Cover
- Consumer Limited Warranty 1
- Product Information Card 1
- Important Safety Instructions 2
- Unpacking and Installation Instructions ... 3
- Grounding Instructions 3
- Information You Need to Know 4-6
- Part Names 7-8
- Before Operating 9
- Manual Operation 9
- Special Features 10-15
  - Reheat 10
  - Cook Center 11
  - Defrost Center 13
  - Manual Defrost 14
  - Popcorn 14
  - Hot Water 14
  - Keep Warm 15
- Other Convenient Features 15-16
- Cleaning and Care 17
- Service Call Check 18
- The Ultimate Accessory 18
- Cookbook Order Form 19
- Specifications 19
- Guia Auto-Touch ..... Parte Interior de la Cubierta Trasera
- Auto-Touch Guide ..... Back Cover

READ ALL INSTRUCTIONS CAREFULLY BEFORE USING THE OVEN.

FOR CUSTOMER ASSISTANCE

To aid in reporting this microwave oven in case of loss or theft, please record below the model number and serial number located on the unit. We also suggest you record all the information listed and retain for future reference.

Please provide the following information when you write or call: model number, serial number, date of purchase, your complete mailing address (including zip code), your daytime telephone number (including area code) and description of the problem.

MODEL NUMBER _____	SERIAL NUMBER _____
DATE OF PURCHASE _____	
DEALER _____	TELEPHONE _____
SERVICER _____	TELEPHONE _____

TO PHONE:

DIAL 1-800- BE-SHARP (237-4277) for :

SERVICE (for your nearest Sharp Authorized Servicer)
PARTS (for your authorized parts distributor)
ADDITIONAL CUSTOMER INFORMATION

DIAL 1-800-642-2122 for :

ACCESSORIES and SHARP CAROUSEL COOKBOOK

TO WRITE:

Sharp Electronics Corporation
Customer Assistance Center
1300 Naperville Drive
Romeoville, IL 60446-1091

TO ACCESS INTERNET: www.sharpusa.com

PRECAUTIONS TO AVOID POSSIBLE EXPOSURE TO EXCESSIVE MICROWAVE ENERGY

(a) Do not attempt to operate this oven with the door open since open-door operation can result in harmful exposure to microwave energy. It is important not to defeat or tamper with the safety interlocks.

(b) Do not place any object between the oven front face and the door or allow soil or cleaner residue to accumulate on sealing surfaces.

(c) Do not operate the oven if it is damaged. It is particularly important that the oven door close properly and that there is no damage to the: (1) door (bent), (2) hinges and latches (broken or loosened), (3) door seals and sealing surfaces.

(d) The oven should not be adjusted or repaired by anyone except properly qualified service personnel.

CONSUMER LIMITED WARRANTY

SHARP ELECTRONICS CORPORATION warrants to the first consumer purchaser that this Sharp brand product (the "Product"), when shipped in its original container, will be free from defective workmanship and materials, and agrees that it will, at its option, either repair the defect or replace the defective Product or part thereof with a new or remanufactured equivalent at no charge to the purchaser for parts or labor for the period(s) set forth below.

This warranty does not apply to any appearance items of the Product nor to the additional excluded item(s) set forth below nor to any Product the exterior of which has been damaged or defaced, which has been subjected to improper voltage or other misuse, abnormal service or handling, or which has been altered or modified in design or construction.

In order to enforce the rights under this limited warranty, the purchaser should follow the steps set forth below and provide proof of purchase to the servicer.

The limited warranty described herein is in addition to whatever implied warranties may be granted to purchasers by law. ALL IMPLIED WARRANTIES INCLUDING THE WARRANTIES OF MERCHANTABILITY AND FITNESS FOR USE ARE LIMITED TO THE PERIOD(S) FROM THE DATE OF PURCHASE SET FORTH BELOW. Some states do not allow limitations on how long an implied warranty lasts, so the above limitation may not apply to you.

Neither the sales personnel of the seller nor any other person is authorized to make any warranties other than those described herein, or to extend the duration of any warranties beyond the time period described herein on behalf of Sharp.

The warranties described herein shall be the sole and exclusive warranties granted by Sharp and shall be the sole and exclusive remedy available to the purchaser. Correction of defects, in the manner and for the period of time described herein, shall constitute complete fulfillment of all liabilities and responsibilities of Sharp to the purchaser with respect to the Product, and shall constitute full satisfaction of all claims, whether based on contract, negligence, strict liability or otherwise. In no event shall Sharp be liable, or in any way responsible, for any damages or defects in the Product which were caused by repairs or attempted repairs performed by anyone other than an authorized servicer. Nor shall Sharp be liable or in any way responsible for any incidental or consequential economic or property damage. Some states do not allow the exclusion of incidental or consequential damages, so the above exclusion may not apply to you.

THIS WARRANTY GIVES YOU SPECIFIC LEGAL RIGHTS. YOU MAY ALSO HAVE OTHER RIGHTS WHICH VARY FROM STATE TO STATE.

Your Product Model Number & Description:	R-310H, Home Use Carousel Microwave Oven. (Be sure to have this information available when you need service for your Product.)
Warranty Period for this Product:	One (1) year parts and labor. The warranty period continues for an additional four (4) years, for a total of five (5) years, with respect to the magnetron tube in the Product for parts only; labor and service are not provided free of charge for this additional period.
Additional Item(s) Excluded from Warranty Coverage (if any):	Non-functional accessories, turntable and light bulb.
Where to Obtain Service:	From a Sharp Authorized Servicer located In the United States. To find the location of the nearest Sharp Authorized Servicer, call Sharp toll free at 1-800-BE-SHARP (1-800-237-4277).
What to do to Obtain Service:	Ship prepaid or carry in your Product to a Sharp Authorized Servicer. Be sure to have **Proof of Purchase** available. If you ship the Product, be sure it is insured and packaged securely.

TO OBTAIN SUPPLY, ACCESSORY OR PRODUCT INFORMATION, CALL
1-800-BE-SHARP OR VISIT www.sharpusa.com.
Save the proof of purchase as it is needed should your oven ever require warranty service.

PRODUCT INFORMATION CARD

The product information card which is on the inside of the microwave oven carton should be completed within ten days of purchase and returned. We will keep it on file and help you access the information in case of loss, damage or theft. This will also enable us to contact you in the unlikely event that any adjustments or modifications are ever required for your oven.

IMPORTANT SAFETY INSTRUCTIONS

When using electrical appliances basic safety precautions should be followed, including the following:

WARNING - To reduce the risk of burns, electric shock, fire, injury to persons or exposure to excessive microwave energy:

1. **Read all instructions before using the appliance.**
2. Read and follow the specific **"PRECAUTIONS TO AVOID POSSIBLE EXPOSURE TO EXCESSIVE MICROWAVE ENERGY"** on inside front cover.
3. This appliance must be grounded. Connect only to properly grounded outlet. See **"GROUNDING INSTRUCTIONS"** on page 3.
4. Install or locate this appliance only in accordance with the provided installation instructions.
5. Some products such as whole eggs and sealed containers —for example, closed glass jars — are able to explode and should not be heated in this oven.
6. Use this appliance only for its intended use as described in this manual. Do not use corrosive chemicals or vapors in this appliance. This type of oven is specifically designed to heat, cook or dry food. It is not designed for industrial or laboratory use.
7. As with any appliance, close supervision is necessary when used by children.
8. Do not operate this appliance if it has a damaged cord or plug, if it is not working properly or if it has been damaged or dropped.
9. This appliance should be serviced only by qualified service personnel. Contact nearest Sharp Authorized Servicer for examination, repair or adjustment.
10. Do not cover or block any openings on the appliance.
11. Do not store or use this appliance outdoors. Do not use this product near water—for example, near a kitchen sink, in a wet basement, near a swimming pool or similar locations.
12. Do not immerse cord or plug in water.
13. Keep cord away from heated surfaces.
14. Do not let cord hang over edge of table or counter.
15. See door surface cleaning instructions on page 17.
16. To reduce the risk of fire in the oven cavity:
    a. Do not overcook food. Carefully attend appliance when paper, plastic or other combustible materials are placed inside the oven to facilitate cooking.
    b. Remove wire twist-ties from paper or plastic bags before placing bag in oven.
    c. If materials inside the oven ignite, keep oven door closed, turn oven off and disconnect the power cord or shut off power at the fuse or circuit breaker panel.
    d. Do not use the cavity for storage purposes. Do not leave paper products, cooking utensils or food in the cavity when not in use.
17. Liquids, such as water, coffee or tea are able to be overheated beyond the boiling point without appearing to be boiling. Visible bubbling or boiling when the container is removed from the microwave oven is not always present. THIS COULD RESULT IN VERY HOT LIQUIDS SUDDENLY BOILING OVER WHEN A SPOON OR OTHER UTENSIL IS INSERTED INTO THE LIQUID. To reduce the risk of injury to persons:
    a. Do not overheat the liquid.
    b. Stir the liquid both before and halfway through heating it.
    c. Do not use straight-sided containers with narrow necks. Use a wide-mouthed container.
    d. After heating, allow the container to stand in the microwave oven at least for 20 seconds before removing the container.
    e. Use extreme care when inserting a spoon or other utensil into the container.
18. If the oven light fails, consult a SHARP AUTHORIZED SERVICER.

SAVE THESE INSTRUCTIONS

UNPACKING AND INSTALLATION INSTRUCTIONS

Unpacking and Examining Your Oven

Remove:

1. all packing materials from inside the oven cavity; however, DO NOT REMOVE THE WAVEGUIDE COVER, which is located on the right cavity wall. Read enclosures and SAVE the Operation Manual.

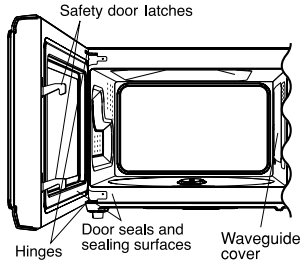

2. the feature sticker, if there is one, from the outside of the door.

Check the oven for any damage, such as misaligned or bent door, damaged door seals and sealing surfaces, broken or loose door hinges and latches and dents inside the cavity or on the door. If there is any damage, do not operate the oven and contact your dealer or SHARP AUTHORIZED SERVICER.

Choosing a Location for Your Oven

You will use the oven frequently so plan its location for ease of use. It's wise, if possible, to have counter space on at least one side of the oven. Allow at least 2 inches on the sides, top and at the rear of the oven for air circulation. Do not place or install the oven in any area where heat and steam are generated; for example, next to or above a conventional gas or electric range or above a conventional wall oven. Heat and steam may damage the electronics or the mechanical parts of the oven.

GROUNDING INSTRUCTIONS

This appliance must be grounded. This oven is equipped with a cord having a grounding wire with a grounding plug. It must be plugged into a wall receptacle that is properly installed and grounded in accordance with the National Electrical Code and local codes and ordinances. In the event of an electrical short circuit, grounding reduces risk of electric shock by providing an escape wire for the electric current.

WARNING – Improper use of the grounding plug can result in a risk of electric shock.

Electrical Requirements

The electrical requirements are a 120 volt 60 Hz, AC only, 15 amp. or more protected electrical supply. It is recommended that a separate circuit serving only this appliance be provided.

The oven is equipped with a 3-prong grounding plug. It must be plugged into a wall receptacle that is properly installed and grounded. Should you only have a 2-prong outlet, have a qualified electrician install a correct wall receptacle.

A 3-prong adapter may be purchased and used temporarily if local codes allow. Follow package directions.

A short power-supply cord is provided to reduce risk of becoming entangled in or tripping over a longer cord.

Permanent and Correct Installation

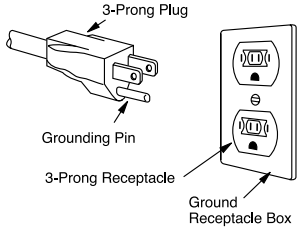

Temporary Use

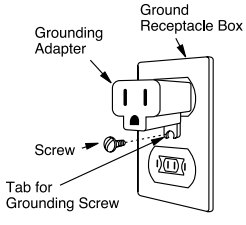

Extension Cord

If it is necessary to use an extension cord, use only a 3-wire extension cord that has a 3-blade grounding plug and a 3-slot receptacle that will accept the plug on the microwave oven. The marked rating of the extension cord should be AC 115-120 volt, 15 amp. or more.

Be careful not to drape the cord over the countertop or table where it can be pulled on by children or tripped over accidentally.

Notes: 1. If you have any questions about the grounding or electrical instructions, consult a qualified electrician or service person.

2. Neither Sharp nor the dealer can accept any liability for damage to the oven or personal injury resulting from failure to observe the correct electrical connection procedures.

Radio or TV Interference

Should there be any interference caused by the microwave oven to your radio or TV, check that the microwave oven is on a different electrical circuit, relocate the radio or TV as far away from the oven as feasible or check position and signal of receiving antenna.

ABOUT YOUR OVEN

This Operation Manual is valuable: read it carefully and always save it for reference.

A good microwave cookbook is a valuable asset. Check it for microwave cooking principles, techniques, hints and recipes. See pages 18 and 19 for ordering the Ultimate Accessory, the SHARP CAROUSEL MICROWAVE COOKBOOK.

NEVER use the oven without the turntable and support nor turn the turntable over so that a large dish could be placed in the oven. The turntable will turn both clockwise and counterclockwise.

ALWAYS have food in the oven when it is on to absorb the microwave energy.

When using the oven at power levels below 100%, you may hear the magnetron cycling on and off. It is normal for the exterior of the oven to be warm to the touch when cooking or reheating.

Condensation is a normal part of microwave cooking. Room humidity and the moisture in food will influence the amount of moisture that condenses in the oven. Generally, covered foods will not cause as much condensation as uncovered ones. Vents on the oven back must not be blocked.

The oven is for food preparation only. It should not be used to dry clothes or newspapers.

Your oven is rated 1200 watts by using the IEC Test Procedure. In using recipes or package directions, check food a minute or two before the minimum time and add time accordingly.

ABOUT FOOD

FOOD	DO	DON'T
Eggs, sausages, nuts, seeds fruits & vegetables	• Puncture egg yolks before cooking to prevent "explosion". • Pierce skins of potatoes, apples, squash, hot dogs and sausages so that steam escapes.	• Cook eggs in shells. • Reheat whole eggs. • Dry nuts or seeds in shells.
Popcorn	• Use specially bagged popcorn for the microwave oven. • Listen while popping corn for the popping to slow to 1 or 2 seconds or use special **POPCORN** pad.	• Pop popcorn in regular brown bags or glass bowls. • Exceed maximum time on popcorn package.
Baby food	• Transfer baby food to small dish and heat carefully, stirring often. Check temperature before serving. • Put nipples on bottles after heating and shake thoroughly. "Wrist" test before feeding.	• Heat baby food in original jars. • Heat disposable bottles. • Heat bottles with nipples on.
General	• Cut baked goods with filling after heating to release steam and avoid burns. • Stir liquids briskly before heating and allow to stand at least for 20 seconds after heating before stirring or drinking to avoid eruption. • Use deep bowl, when cooking liquids or cereals, to prevent boilovers.	• Heat or cook in closed glass jars or air tight containers. • Can in the microwave as harmful bacteria may not be destroyed. • Deep fat fry. • Dry wood, gourds, herbs or wet papers.

ABOUT UTENSILS AND COVERINGS

It is not necessary to buy all new cookware. Many pieces already in your kitchen can be used successfully in your new microwave oven. Make sure the utensil does not touch the interior walls during cooking.

Use these utensils for safe microwave cooking and reheating:

- glass ceramic (Pyroceram®), such as Corningware®.
- heat-resistant glass (Pyrex®)
- microwave-safe plastics
- paper plates
- microwave-safe pottery, stoneware and porcelain
- browning dish (Do not exceed recommended preheating time. Follow manufacturer's directions.)

These items can be used for short time reheating of foods that have little fat or sugar in them:

- wood, straw, wicker

DO NOT USE

- metal pans and bakeware
- dishes with metallic trim
- non-heat-resistant glass
- non-microwave-safe plastics (margarine tubs)
- recycled paper products
- brown paper bags
- food storage bags
- metal twist-ties

Should you wish to check if a dish is safe for microwaving, place the empty dish in the oven and microwave on HIGH for 30 seconds. A dish which becomes very hot should not be used.

The following coverings are ideal:

- Paper towels are good for covering foods for reheating and absorbing fat while cooking bacon.
- Wax paper can be used for cooking and reheating.
- Plastic wrap that is specially marked for microwave use can be used for cooking and reheating. DO NOT allow plastic wrap to touch food. Vent so steam can escape.
- Lids that are microwave-safe are a good choice because heat is kept near the food to hasten cooking.
- Oven cooking bags are good for large meats or foods that need tenderizing. DO NOT use metal twist ties. Remember to slit bag so steam can escape.

How to use aluminum foil in your microwave oven:

- Small flat pieces of aluminum foil placed smoothly on the food can be used to shield areas that are either defrosting or cooking too quickly.
- Foil should not come closer than one inch to any surface of the oven.

Should you have questions about utensils or coverings, check a good microwave cookbook or follow recipe suggestions.

ACCESSORIES There are many microwave accessories available for purchase. Evaluate carefully before you purchase so that they meet your needs. A microwave-safe thermometer will assist you in determining correct doneness and assure you that foods have been cooked to safe temperatures. Sharp is not responsible for any damage to the oven when accessories are used.

ABOUT CHILDREN AND THE MICROWAVE

Children below the age of 7 should use the microwave oven with a supervising person very near to them. Between the ages of 7 and 12, the supervising person should be in the same room.

The child must be able to reach the oven comfortably; if not, he/she should stand on a sturdy stool.

At no time should anyone be allowed to lean or swing on the oven door.

Children should be taught all safety precautions: use potholders, remove coverings carefully, pay special attention to packages that crisp food because they may be extra hot.

Don’t assume that because a child has mastered one cooking skill he/she can cook everything.

Children need to learn that the microwave oven is not a toy. See page 16 for Child Lock feature.

ABOUT MICROWAVE COOKING

- Arrange food carefully. Place thickest areas towards outside of dish.
- Watch cooking time. Cook for the shortest amount of time indicated and add more as needed. Food severely overcooked can smoke or ignite.
- Cover foods while cooking. Check recipe or cookbook for suggestions: paper towels, wax paper, microwave plastic wrap or a lid. Covers prevent spattering and help foods to cook evenly.
- Shield with small flat pieces of aluminum foil any thin areas of meat or poultry to prevent overcooking before dense, thick areas are cooked thoroughly.
- Stir foods from outside to center of dish once or twice during cooking, if possible.
- Turn foods over once during microwaving to speed cooking of such foods as chicken and hamburgers. Large items like roasts must be turned over at least once.
- Rearrange foods such as meatballs halfway through cooking both from top to bottom and from the center of the dish to the outside.
- Add standing time. Remove food from oven and stir, if possible. Cover for standing time which allows the food to finish cooking without overcooking.
- Check for doneness. Look for signs indicating that cooking temperatures have been reached.

  Doneness signs include:

  - Food steams throughout, not just at edge.
  - Center bottom of dish is very hot to the touch.
  - Poultry thigh joints move easily.
  - Meat and poultry show no pinkness.
  - Fish is opaque and flakes easily with a fork.

ABOUT SAFETY

- Check foods to see that they are cooked to the United States Department of Agriculture's recommended temperatures.

TEMP	FOOD
160°F	... for fresh pork, ground meat, boneless white poultry, fish, seafood, egg dishes and frozen prepared food.
165°F	... for leftover, ready-to-reheat refrigerated, and deli and carry-out “fresh” food.
170°F	... white meat of poultry.
180°F	... dark meat of poultry.

To test for doneness, insert a meat thermometer in a thick or dense area away from fat or bone. NEVER leave the thermometer in the food during cooking, unless it is approved for microwave oven use.

- ALWAYS use potholders to prevent burns when handling utensils that are in contact with hot food. Enough heat from the food can transfer through utensils to cause skin burns.
- Avoid steam burns by directing steam away from the face and hands. Slowly lift the farthest edge of a dish's covering and carefully open popcorn and oven cooking bags away from the face.
- Stay near the oven while it's in use and check cooking progress frequently so that there is no chance of overcooking food.
- NEVER use the cavity for storing cookbooks or other items.
- Select, store and handle food carefully to preserve its high quality and minimize the spread of foodborne bacteria.
- Keep waveguide cover clean. Food residue can cause arcing and/or fires.
- Use care when removing items from the oven so that the utensil, your clothes or accessories do not touch the safety door latches.

MICROWAVE OVEN PARTS

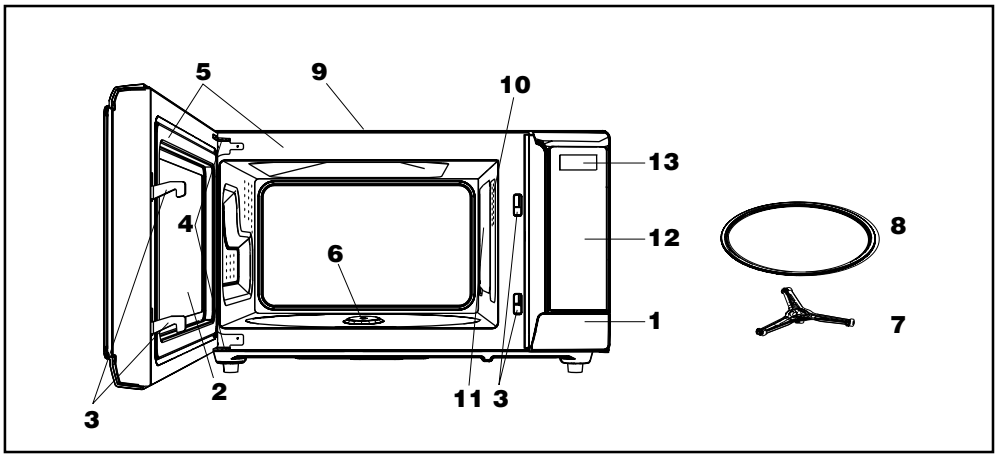

1 Door opening button
Push to open door.

2 Oven door with see-through window

3 Safety door latches

The oven will not operate unless the door is securely closed.

4 Door hinges

5 Door seals and sealing surfaces

6 Turntable motor shaft

7 Removable turntable support

Carefully place the turntable support in the center of the oven floor.

8 Removable turntable

Place the turntable on the turntable support securely. The turntable will rotate clockwise or counterclockwise. Only remove for cleaning.

9 Ventilation openings (Rear)

10 Oven light

It will light when oven is operating or door is open.

11 Waveguide cover: DO NOT REMOVE.

12 Auto-Touch control panel

13 Time display: 99 minutes, 99 seconds

DISPLAY

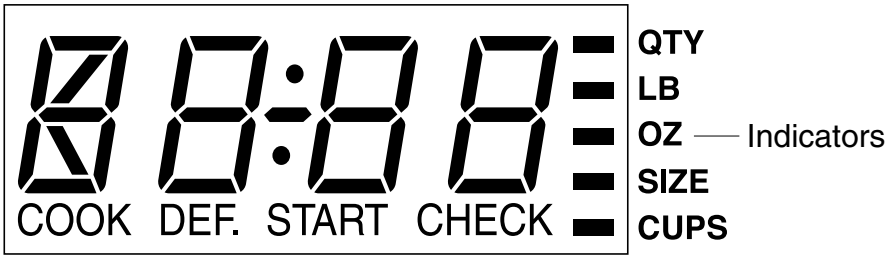

Words in the lower portion of the display will light to indicate what function is in process.

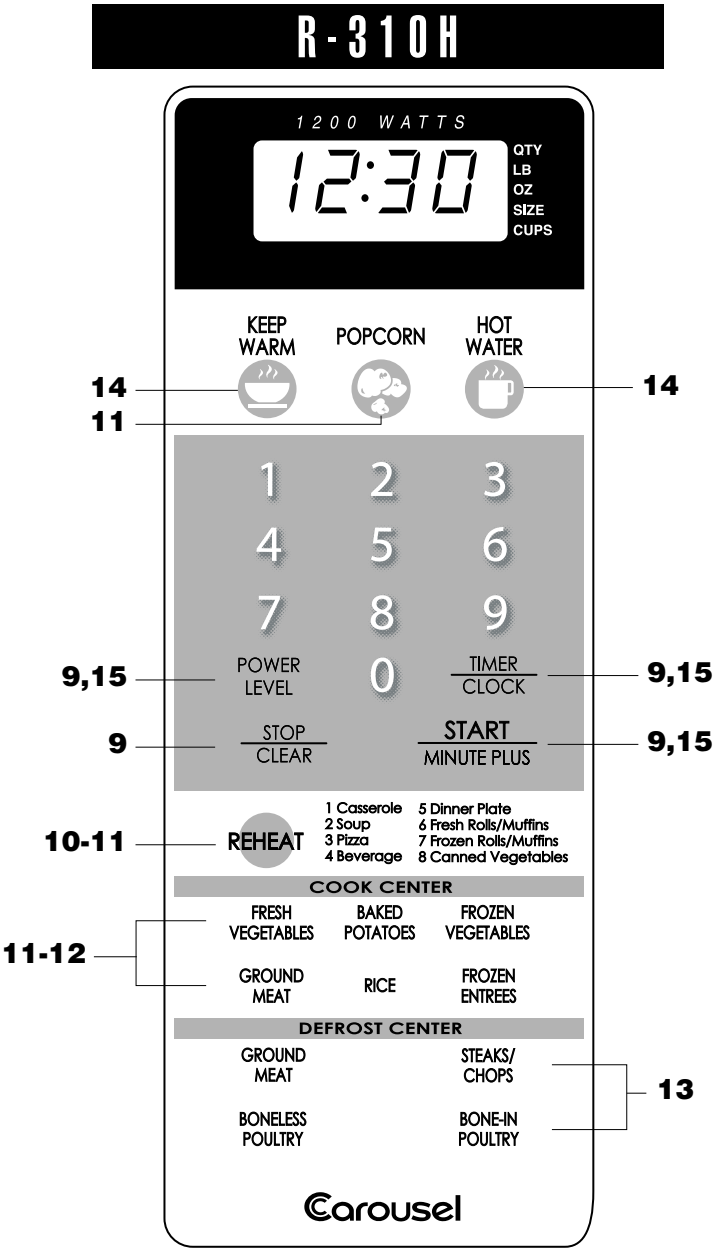

Number next to the control panel illustration indicates page on which there are a feature description and usage information.

BEFORE OPERATING

- Before operating your new microwave oven make sure you read and understand this operation manual completely.
- Before the oven can be used, follow these procedures:
  1. Plug in the oven. Close the door. The oven display will then begin flashing [88:88].
  2. Touch **STOP/CLEAR** pad. [:] will appear.
  3. Touch **TIMER/CLOCK** pad to set clock.

TO SET THE CLOCK

- Suppose you want to enter the correct time of day 12:30 (A.M. or P.M.).

PROCEDURE	DISPLAY
1 [TIMER/CLOCK] Touch **CLOCK** pad.	[: 0] The colon (:) will flash.
2 [1] [2] [3] [0] Enter the correct time of day by touching the numbers in sequence.	[12:30]
3 [TIMER/CLOCK] Touch **CLOCK** pad again.	[12:30]

This is a 12 hour clock. If you attempt to enter an incorrect clock time, [EE] will appear in the display. Touch **STOP/CLEAR** pad and re-enter the time.

- If the electrical power supply to your microwave oven should be interrupted, the display will intermittently show [88:88] after the power is reinstated. If this occurs during cooking, the program will be erased. The time of day will also be erased. Simply touch **STOP/CLEAR** pad and reset the clock for the correct time of day.

STOP/CLEAR

Touch **STOP/CLEAR** pad to:

1. Erase if you make a mistake during programming.
2. Cancel timer.
3. Stop the oven temporarily during cooking.
4. Return the time of day to the display.
5. Cancel a program during cooking, touch twice.

MANUAL OPERATION

TIME COOKING

Your oven can be programmed for 99 minutes 99 seconds (99.99). Always enter the seconds after the minutes, even if they are both zeros.

- Suppose you want to cook for 5 minutes at 100%.

PROCEDURE	DISPLAY
1 [5] [0] [0] Enter cooking time.	[5.00 START] START will flash.
2 [START/MINUTE PLUS] Touch **START** pad.	[5.00 COOK]

TO SET POWER LEVEL

There are eleven preset power levels.

Using lower power levels increases the cooking time which is recommended for foods such as cheese, milk and long slow cooking of meats. Consult cookbook or recipes for specific recommendations.

TOUCH POWER LEVEL PAD	APPROXIMATE PERCENTAGE OF POWER	COMMON WORDS FOR POWER LEVELS
once	100%	High
twice	90%	
3 times	80%	
4 times	70%	Medium High
5 times	60%	
6 times	50%	Medium
7 times	40%	
8 times	30%	Med Low/Defrost
9 times	20%	
10 times	10%	Low
11 times	0%	

- Suppose you want to defrost for 5 minutes at 30%.

PROCEDURE	DISPLAY
1 [5] [0] [0] Enter defrost time.	[5.00 START] START will flash.
2 [POWER LEVEL] x 8 Touch **POWER LEVEL** pad 8 times or hold down until the desired power level appears.	[P- 30 START]
3 [START/MINUTE PLUS] Touch **START** pad.	[5.00 COOK]
4 When the defrost time is complete, a long tone will sound and [End] will appear in the display.	

REHEAT

Reheat automatically computes the correct warming time and microwave power level for foods shown in the chart below.

- Suppose you want to reheat 3 cups of soup.

PROCEDURE		
1	Touch **REHEAT** once.	REHEAT
2	Select desired food by touching number pad. (Ex: Touch 2 for soup.)	2
3	Repeat touching same number pad to select quantity. (Ex: Touch 2 three more times for 3 cups.)	2 x 3
4	Touch **START** pad.	START MINUTE PLUS

NOTE:

1. To reheat other foods or foods above or below the quantity allowed on the REHEAT CHART, heat manually.
2. Reheat can be programmed with More or Less Time Adjustment. See page 16.

REHEAT CHART

FOOD	AMOUNT	PROCEDURE
1. Casserole	1 - 4 cups	Use to reheat refrigerated canned or homemade pasta with sauce or other cooked casserole. For room temperature pasta or casserole, use Less option. For pasta without sauce double the quantity per setting. For example, measure 2 cups of cooked noodles and program for 1 cup. Cover with lid or plastic wrap. After cooking, stir and let stand, covered, 2 to 3 minutes.
2. Soup	1 - 4 cups	Place in bowl or casserole. Cover with lid or plastic wrap. At end, stir, re-cover and let stand 1 to 3 minutes.
3. Pizza	1 - 4 slices	Use this pad to reheat refrigerated leftover pizza. 1 slice is approximately 1/8th of a 12 inch pizza or 1/12th of a 16 inch pizza. Place on paper towel.
4. Beverage	.5 - 2 cups	This setting is good for restoring cooled beverage to a better drinking temperature. Stir after heating. You can reheat .5 cup, 1 cup, 1.5 cups and 2 cups beverage by touching number pad 4.
5. Dinner Plate	1 plate	Use to reheat precooked foods from the refrigerator. Place meaty portions and bulky vegetables to outside of plate. Cut large items like baked potatoes in smaller pieces. Flatten foods such as mashed potatoes and other dense foods. Cover with wax paper or plastic wrap. ONE PLATE ONLY. After cooking, check that food is very hot throughout and that the bottom center of the plate is very hot. If not, continue heating using time and power level. Allow to stand, covered, 1 to 2 minutes.
	1 Regular	Touch **REHEAT** pad and number pad 5 twice for a regular amount of food: approximately 4 oz. sliced meat or poultry, 1/2 cup potato or rice and 1/2 cup of vegetables or equivalent. REG will appear in the display.
	1 Large	Touch **REHEAT** pad and number pad 5 three times for a larger amount of food on a dinner plate. LG will appear in the display.
	1 Small	Touch **REHEAT** pad and number pad 5 four times for a smaller amount of food on a dinner plate. S will appear in the display.

REHEAT CHART (continued)

FOOD	AMOUNT	PROCEDURE
6. Fresh Rolls/Muffins	1 - 6 pieces	Use to warm rolls, muffins, biscuits, bagels etc. Large items should be considered as 2 regular size. Cover with paper towel. For refrigerated rolls or muffins, it may be necessary to double the entered amount to ensure the proper serving temperature. For example, enter quantity of 2 for 1 refrigerated muffin.
7. Frozen Rolls/Muffins	1 - 6 pieces	Use to warm frozen rolls, muffins, biscuits, bagels etc. Large items should be considered as 2 or 3 regular size. Arrange on plate; cover with paper towel.
8. Canned Vegetables	1 cup cooked vegetables or 1 (8 oz.) can vegetables	For 1 can of vegetables, add 1 tablespoon of liquid from the can. Touch **REHEAT** pad and the number pad 8 twice. 8 will appear in the display.
	1 3/4 cups cooked vegetables or 1 (15 oz.) can vegetables	For 1 can of vegetables, add 2 tablespoons of liquid from the can. Touch **REHEAT** pad and the number pad 8 three times. 15 will appear in the display.

COOK CENTER

Cook Center allows you to cook many of your favorite foods by touching just one pad.

- Suppose you want to cook 3 medium baked potatoes.

PROCEDURE	
1 Select desired setting. Touch **BAKED POTATOES** pad 3 times or hold down until the desired quantity appears. The oven starts automatically.	BAKED POTATOES x 3

TIPS: Foods can be covered with wax paper or vented plastic wrap. Temperatures of foods covered with plastic wrap tend to be slightly higher than those covered with wax paper.

NOTE:

1. To increase quantity, touch chosen pad until number in display is same as desired quantity to cook. Ex: touch **BAKED POTATOES** pad three times for 3 baked potatoes. More or less food than the quantity listed in the chart should be cooked following the guidelines in any microwave cookbook.
2. To use any Cook Center pad, touch within 3 minutes after cooking, opening and closing the door or touching **STOP/CLEAR** pad.
3. Cook Center can be programmed with More or Less Time Adjustment. See page 16.
4. The final cooking result will vary according to the food condition (e.g. initial temperature, shape, quality). Check food for temperature after cooking. If additional time is needed, continue to cook manually.

COOK CENTER CHART

FOOD	AMOUNT	PROCEDURE
Fresh Vegetables	1- 4 cups	For beans, carrots, corn and peas, add 1 tablespoon of water per cup. For broccoli, Brussels sprouts, cabbage and cauliflower, cook immediately after washing with no additional water. If you like tender crisp vegetables, double or triple measured quantity per setting. For example, use 2 cups or 3 cups of zucchini but touch **FRESH VEGETABLES** pad only once. After cooking, remove from oven, stir, cover and let stand 3 to 5 minutes before serving.

COOK CENTER CHART (continued)

FOOD	AMOUNT	PROCEDURE
Baked Potatoes	1-4 medium	Pierce with fork in several places. Place on paper towel on turntable. After cooking, remove from oven and let stand wrapped in foil for 5 to 10 minutes.
Frozen Vegetables	1-4 cups	Add no water. Cover with lid or plastic wrap. After cooking, stir and let stand, covered, for 3 minutes.
Ground Meat	.3-1.5 lb	Use this setting to cook ground beef or turkey as patties or in a casserole to be added to other ingredients. Place patties on a microwave-safe rack and cover with wax paper. Place ground meat in a casserole and cover with wax paper or plastic wrap. When oven stops, turn patties over or stir meat in casserole to break up large pieces. Re-cover and touch **START** pad. After cooking, let stand, covered for 2 to 3 minutes. You can cook .3 lb, .5 lb, 1.0 lb and 1.5 lb ground meat by touching **GROUND MEAT** pad. You may choose to enter the weight in tenths of pounds. To program, touch **GROUND MEAT** pad and enter weight by touching the number pads. Ex : touch **GROUND MEAT** pad then [1] and [3] for a weight of 1.3 lb. If you attempt to enter more or less than the allowed amount, [EE] will appear in the display. The number pads should be touched within 2 seconds after touching **GROUND MEAT** pad.
Rice	.5-2.0 cups	Place rice into a deep casserole and add double quantity of water. Cover with lid or plastic wrap. After cooking, stir, cover and let stand 3 to 5 minutes or until all liquid has been absorbed.

Rice	Water	Size of casserole
.5 cup	1 cup	1.5 ℓ
1 cup	2 cups	2 ℓ
1.5 cups	3 cups	2.5 or 3 ℓ
2 cups	4 cups	3 ℓ

Frozen Entrees	6-17 oz.	Use this pad for frozen, convenience foods. It will give satisfactory results for most brands. You may wish to try several and choose your favorite. Remove package from outer wrapping and follow package directions for covering. After cooking, let stand, covered, for 1 to 3 minutes.
	6-8 oz.	Touch **FROZEN ENTREES** pad once for packages weighing 6-8 oz. [6- 8] will appear in the display.
	9-11 oz.	Touch **FROZEN ENTREES** pad twice within 2 seconds for packages weighing 9-11 oz. [9- 11] will appear in the display.
	12-14 oz.	Touch **FROZEN ENTREES** pad three times within 3 seconds for packages weighing 12-14 oz. [12- 14] will appear in the display.
	15-17 oz.	Touch **FROZEN ENTREES** pad four times within 4 seconds for packages weighing 15-17 oz. [15- 17] will appear in the display.

DEFROST CENTER

Defrost Center automatically defrosts all the foods shown in the DEFROST CENTER CHART below.

Round the weight to the nearest half pound. (Ex: if the steak's actual weight is 2.2 lb round to 2.0 lb. If the steak's weight is 2.4 lb round to 2.5 lb.)

To enter weight, touch the desired DEFROST CENTER pad for a 0.5 lb increase per touch. (Ex: touch four times for 2.0 lb.)

- Suppose you want to defrost a 2.0 pound steak .

PROCEDURE

1 Quickly touch **STEAKS/ CHOPS** pad 4 times or hold down until desired quantity appears. The oven will start automatically.

STEAKS/ CHOPS x 4

The oven will stop and directions will be displayed.

2 After the 1st stage, open the door, turn steak over and shield any warm portions. Close the door.

Touch **START** pad.

START MINUTE PLUS

3 After the 2nd stage, open the door and shield any warm portions. Close the door.

Touch **START** pad.

START MINUTE PLUS

4 After defrost cycle ends, cover and let stand as indicated in chart below.

NOTE:

1. Defrost Center can be programmed with More or Less Time Adjustment. Touch the **POWER LEVEL** pad once or twice after selecting the amount. See page 16.
2. To defrost other foods or foods above or below the weights allowed in the DEFROST CENTER CHART, use time and 30% power. See MANUAL DEFROST on page 14.
3. You may choose to enter the weight in tenths of pounds. This procedure may be easier with larger weights such as 3 pounds because it requires fewer touches. To program, touch desired DEFROST CENTER pad and enter weight by touching the number pads. Ex: touch **STEAKS/CHOPS** pad then 3 and 0 for a weight of three pounds or touch **STEAKS/CHOPS** pad then 2 and 2 for a weight of 2.2 lb.

   If you attempt to enter more or less than the allowed amount as indicated in chart below, EE will appear in the display.
4. To use any DEFROST CENTER pad, touch within 3 minutes after cooking, opening and closing the door or touching the **STOP/CLEAR** pad.

DEFROST CENTER CHART

FOOD	AMOUNT	PROCEDURE
Ground Meat	.5 - 2.0 lb	Pull apart and remove any thawed pieces after each stage. Let stand, covered, for 5 to 10 minutes.
Steaks/Chops	.5 - 3.0 lb	After each stage, rearrange and if there are warm or thawed portions, shield with small flat pieces of aluminum foil. Remove any meat that is nearly defrosted. Let stand, covered, for 10 to 20 minutes.
Boneless Poultry	.5 - 1.5 lb	Use boneless breast of chicken or turkey. After each stage, if there are warm or thawed portions, rearrange or remove. Let stand, covered, for 10 to 20 minutes.
Bone-in Poultry	.5 - 3.0 lb	Arrange pieces with meatiest portions toward outside of glass dish or microwave safe rack. After each stage, if there are warm or thawed portions, rearrange or remove. Let stand, covered, for 10 to 20 minutes.

NOTE: Check foods when oven signals. After final stage, small sections may still be icy. Let stand to continue thawing. Do not defrost until all ice crystals are thawed.
Shielding prevents cooking from occurring before the center of the food is defrosted. Use small smooth strips of aluminum foil to cover edges and thinner sections of the food.

MANUAL DEFROST

If the food that you wish to defrost is not listed on the DEFROST CENTER CHART or is above or below the limits in the "Amount" column on the DEFROST CENTER CHART, you need to defrost manually.

You can defrost any frozen food, either raw or previously cooked, by using 30% Power Level. See page 9. Estimate defrosting time and press **POWER LEVEL** pad 8 times for 30% when you select the power level.

For either raw or previously cooked frozen food the rule of thumb is approximately 4 minutes per pound. For example, defrost 4 minutes for 1 pound of frozen spaghetti sauce.

Always stop the oven periodically to remove or separate the portions that are defrosted. If food is not defrosted at the end of the estimated defrosting time, program the oven in 1 minute increments at 30% until totally defrosted.

When using plastic containers from the freezer, defrost only long enough to remove from the plastic in order to place in a microwave-safe dish.

POPCORN

The popcorn setting automatically provides the correct cooking time for most brands of microwave popcorn. See the chart below.

- Suppose you want to pop a 3.5 oz bag of regular popcorn.

PROCEDURE		
1	POPCORN	Touch **POPCORN** pad once. The oven starts automatically.

Popcorn can only be entered within 3 minutes after cooking, opening and closing the door or touching the **STOP/CLEAR** pad.

Popcorn can be programmed with More or Less Time adjustment. See page 16.

POPCORN CHART

FOOD	AMOUNT	PROCEDURE
POPCORN	1 bag	Try several brands to decide which is most acceptable for your taste. Unfold bag and place in oven according to directions.
	3.5 oz bag (Regular)	Touch **POPCORN** pad once for regular. RG .
	2.85 - 3.5 oz bag (Regular Light)	Touch **POPCORN** pad twice within 2 seconds for regular light. RG-L .
	1.5 - 1.75 oz (Snack)	Touch **POPCORN** pad three times within 3 seconds for snack. Sn .

HOT WATER

Hot water heats 1 to 6 cups of tap water to prepare coffee, tea, bouillon or instant soup as well as heat the water to cook pasta. When preparing individual cups, place instant coffee, tea or bouillon in cup and stir before heating. Allow to stand 20 seconds after heating before stirring and drinking. Stir carefully after removing from the oven. When heating 4 to 6 cups of water, place in large casserole and cover with lid or plastic wrap. When oven signals, add pasta and continue cooking according to package directions. Touch **HOT WATER** pad once for each cup up to 6.

- Suppose you want to heat 3 cups of water.

PROCEDURE		
1	Touch **HOT WATER** pad 3 times. The oven starts automatically.	HOT WATER x 3

NOTE:

1. To use **HOT WATER** pad, touch within 3 minutes after cooking, opening and closing the door or touching the **STOP/CLEAR** pad.
2. Hot water can be programmed with More or Less Time Adjustment. See page 16.

KEEP WARM

Keep Warm allows you to keep food warm for 15 minutes.

To use, simply touch the **KEEP WARM** pad. You can also program Keep Warm with manual cooking to keep food warm continuously after cooking.

DIRECT USE

- Suppose you want to keep a cup of soup warm for 15 minutes.

PROCEDURE

1	Touch **KEEP WARM** pad.	KEEP WARM

The oven will start automatically. The display will show 15.00 and count down. KEEP will appear in the display every 10 seconds.

WITH MANUAL COOKING

- Suppose you want to cook a cup of soup for 2 minutes at 70% and keep the soup warm for 15 minutes.

PROCEDURE

1	Enter cooking time.	2 0 0
2	Touch **POWER LEVEL** pad 4 times for 70% power.	POWER LEVEL x 4
3	Touch **KEEP WARM** pad.	KEEP WARM
4	Touch **START** pad.	START / MINUTE PLUS

The operation will start. When the cooking time is complete, a long tone will sound and Keep Warm will start. KEEP will appear in the display every 10 seconds and count down for 15 minutes.

NOTE:

1. To use Keep Warm after previous cooking has ended (for direct use), touch **KEEP WARM** pad within 3 minutes after cooking, closing the door, touching the **STOP/CLEAR** pad.
2. Keep Warm cannot be programmed with SPECIAL FEATURES.

OTHER CONVENIENT FEATURES

MULTIPLE SEQUENCE COOKING

Your oven can be programmed for up to 3 automatic cooking sequences, switching from one power level setting to another automatically.

Sometimes cooking directions tell you to start on one power level and then change to a different power level. Your oven can do this automatically.

- Suppose you want to cook roast beef for 5 minutes at 100% and then continue to cook for 30 minutes at 50%.

PROCEDURE

1	First enter cooking time. Then touch **POWER LEVEL** pad once for 100% power.	5 0 0 POWER LEVEL x 1
2	Then enter second cooking time. Touch **POWER LEVEL** pad 6 times for 50% power.	3 0 0 0 POWER LEVEL x 6
3	Touch **START** pad.	START / MINUTE PLUS

NOTE:

1. If **POWER LEVEL** pad is touched once, P-HI will be displayed.
2. If 100% is selected as the final sequence, it is not necessary to touch **POWER LEVEL** pad.
3. If you wish to know power level, simply touch **POWER LEVEL** pad. As long as your finger is touching **POWER LEVEL** pad, the power level will be displayed.
4. Keep Warm can be programmed continuously even if 3 cooking sequences have been set.

MINUTE PLUS

Minute Plus allows you to cook for a minute at 100% by simply touching **MINUTE PLUS** pad. You can also extend cooking time in multiples of 1 minute by repeatedly touching **MINUTE PLUS** pad during manual cooking.

- Suppose you want to heat a cup of soup for one minute at 100%.

PROCEDURE

1	Touch **MINUTE PLUS** pad.	START / MINUTE PLUS

NOTE:

1. To use Minute Plus, touch pad within 3 minutes after cooking, closing the door, touching **STOP/CLEAR** pad.
2. Minute Plus cannot be used with Special Features.

TIMER

- Suppose you want to time a 3-minute long distance phone call.

PROCEDURE

1	Enter time.	3 0 0
2	Touch **TIMER** pad.	TIMER / CLOCK

MORE OR LESS TIME ADJUSTMENT

Should you discover that you like any of the Reheat, Cook Center, Defrost Center or Hot Water settings slightly **more** done, touch **POWER LEVEL** pad **once** after touching your choice of pads or before touching **START** pad.

The display will show PLUS.

Should you discover that you like any of the Reheat, Cook Center, Defrost Center or Hot Water settings slightly **less** done, touch **POWER LEVEL** pad **twice** after touching your choice of pads or before touching **START** pad.

The display will show LESS.

NOTE: For **POPCORN**, **COOK CENTER** and **HOT WATER** the **POWER LEVEL** pad must be touched within 1 second of touching your choice of pads.

CHILD LOCK

The Child Lock prevents unwanted oven operation such as by small children. The oven can be set so that the control panel is deactivated or locked. To set, touch **TIMER/CLOCK**, the number 1 and then touch the **START** pad and hold for three seconds. Should a pad be touched, SAFE will appear in the display.

To cancel, touch **TIMER/CLOCK**, the number 1 and **STOP/CLEAR** pads.

AUDIBLE SIGNAL ELIMINATION

If you wish to have the oven operate with no audible signals, touch **TIMER/CLOCK**, the number 5 and then touch the **START** pad and hold for three seconds.

To cancel, touch **TIMER/CLOCK**, the number 5 and **STOP/CLEAR** pads.

DEMONSTRATION MODE

To demonstrate, touch **TIMER/CLOCK**, the number 0 and then touch the **START** pad and hold for 3 seconds. SHO will appear in the display. Cooking operations and specific special features can now be demonstrated with no power in the oven. For example, touch **MINUTE PLUS** pad and the display will show 1.00 and count down quickly to End .

To cancel, touch **TIMER/CLOCK**, the number 0 and **STOP/CLEAR** pads. If easier, unplug the oven from the electrical outlet and replug.

Disconnect the power cord before cleaning or leave the door open to inactivate the oven during cleaning.

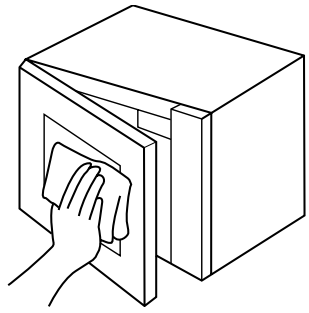

Exterior

Exterior

The outside surface is painted. Clean the outside with mild soap and water; rinse and dry with a soft cloth. Do not use any type of household or abrasive cleaner.

Door

Wipe the window on both sides with a damp cloth to remove any spills or spatters. Metal parts will be easier to maintain if wiped frequently with a damp cloth. Avoid the use of spray and other harsh cleaners as they may stain, streak or dull the door surface.

Touch Control Panel

Wipe the panel with a cloth dampened slightly with water only. Dry with a soft cloth. Do not scrub or use any sort of chemical cleaners. Close door and touch **STOP/CLEAR** pad.

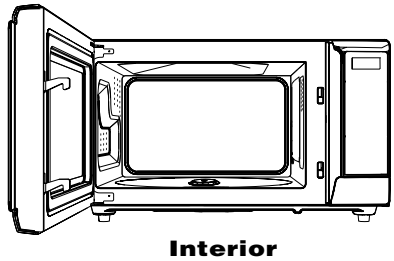

Interior

Interior

Cleaning is easy because little heat is generated to the interior surfaces; therefore, there is no baking and setting of spills or spattering. To clean the interior surfaces, wipe with a soft cloth and warm water. DO NOT USE ABRASIVE OR HARSH CLEANERS OR SCOURING PADS. For heavier soil, use baking soda or a mild soap; rinse thoroughly with hot water. NEVER SPRAY OVEN CLEANERS DIRECTLY ONTO ANY PART OF THE OVEN.

Waveguide Cover

The waveguide cover is made from mica so requires special care. Keep the waveguide cover clean to assure good oven performance. Carefully wipe with a damp cloth any food spatters from the surface of the cover immediately after they occur. Built-up splashes may overheat and cause smoke or possibly catch fire. Do not remove the waveguide cover.

Odor Removal

Occasionally, a cooking odor may remain in the oven. To remove, combine 1 cup water, grated peel and juice of 1 lemon and several whole cloves in a 2-cup glass measuring cup. Boil for several minutes using 100% power. Allow to set in oven until cool. Wipe interior with a soft cloth.

Turntable

Turntable/Turntable Support

The turntable and turntable support can be removed for easy cleaning. Wash them in mild, sudsy water; for stubborn stains use a mild cleanser and a non-abrasive scouring sponge. They are also dishwasher-proof. Use upper rack of dishwasher. The turntable motor shaft is not sealed, so excess water or spills should be wiped up immediately.

Turntable Support

SERVICE CALL CHECK

Please check the following before calling for service:

Place one cup of water in a glass measuring cup in the oven and close the door securely.
Operate the oven for one minute at HIGH 100%.

A Does the oven light come on? YES _____ NO _____

B Does the cooling fan work? YES _____ NO _____
(Put your hand over the rear ventilating openings.)

C Does the turntable rotate? YES _____ NO _____
(It is normal for the turntable to turn in either direction.)

D Is the water in the oven warm? YES _____ NO _____

If "NO" is the answer to any of the above questions, please check electrical outlet, fuse and/or circuit breaker. If they are functioning properly, CONTACT YOUR NEAREST SHARP AUTHORIZED SERVICER. A microwave oven should never be serviced by a "do-it-yourself" repair person.

NOTE: If time appearing in the display is counting down very rapidly, check DEMONSTRATION MODE on page 16 and cancel.

THE ULTIMATE ACCESSORY

Great recipes
~ Reliable microwave reference guide
~ Many color photos
~ Step-by-step instructions
~Nutritional information for each recipe
~ Durable wipe-clean soft cover with 128 8 1/2 x 11 pages
~ Helpful tips and special techniques

SHARP®
CAROUSEL MICROWAVE COOKBOOK

TO ORDER

Simply call this toll-free number : **1-800-642-2122**. Please have your credit card ready.

If you prefer to order by mail, complete and return the order form on page 19. Please include check or money order (payable to Sharp Accessories & Supplies Center) for $6.00 plus $4.25 shipping & handling and tax, if applicable, per book.

SATISFACTION GUARANTEED

You must be completely satisfied with the Sharp Carousel Microwave Cookbook. If, within 14 days, you are dissatisfied for any reason, simply return the book and we'll gladly refund your $6.00 plus tax.

(SOLAMENTE ESCRITO EN INGLES!)

SPECIFICATIONS

AC Line Voltage:	Single phase 120V, 60Hz, AC only
AC Power Required:	1680W 14.2 amps.
Output Power: Microwave★ (IEC Test Procedure)	1200W
Frequency:	2450 MHz
Outside Dimensions:	$20^1/_2$"(W) x $12^1/_4$"(H) x $17^1/_4$"(D)
Cavity Dimensions:	$14^3/_4$"(W) x $8\ ^7/_8$"(H) x $15^1/_4$"(D)
Oven Capacity	1.2 Cu. Ft.
Cooking Uniformity:	Turntable system
Weight:	Approx. 33 lb

★ The International Electrotechnical Commission's standardized method for measuring output wattage. This test method is widely recognized.

In compliance with standards set by:

FCC – Federal Communications Commission Authorized.

DHHS – Complies with Department of Health and Human Services (DHHS) rule, CFR, Title 21, Chapter I, Subchapter J.

UL® – This symbol on the nameplate means the product is listed by Underwriters Laboratories, Inc.

Cut along this line.

COOKBOOK ORDER FORM

Please send me _____ cookbooks at $10.25 each $ _____

Illinois sales tax, (if applicable) per book $.44 no. of books _____ $ _____

TOTAL ORDER AMOUNT $ _____

☐ I have enclosed a check made payable to Sharp Accessories & Supplies Center.

☐ Please bill my ☐ VISA ☐ MASTERCARD ☐ AMERICAN EXPRESS

Acct. No. _____ Expiration date ____ / ___

Signature_____

(All credit card orders must be signed.)

Name _____

Address _____

City _____ State _____ Zip _____

Daytime Phone No. ( ) _____

Mail to: SHARP Accessories & Supplies Center
2130 Townline Road
Peoria, Illinois 61615–1560

Price is subject to change without notice.

NOTES

GUIA AUTO-TOUCH

Para mayor información y precauciones de seguridad, consulte el Manual de Operaciones.

FIJACION DEL RELOJ

Si en la pantalla aparece 88:88 toque primero **STOP/CLEAR**.

1 Toque el botón **CLOCK**. (TIMER CLOCK)

2 Ponga la hora correcta tocando los números en orden. (Ej: 12:30) (1 2 3 0)

3 Toque nuevamente el botón **CLOCK**. (TIMER CLOCK)

OPERACION MANUAL

Cocinando con energía alta

1 Programe el tiempo para cocinar tocando los botones de números. (Ej: 1 min. 30 seg.) (1 3 0)

2 Toque **START**. (START MINUTE PLUS)

Cocinando con energía variable

1 Después del paso 1 anterior, toque el botón **POWER LEVEL** 6 veces.(Ej: 50%) (POWER LEVEL x 6)

2 Toque **START**. (START MINUTE PLUS)

POP CORN/COOK CENTER (PALOMITAS DE MAIZ/CENTRO DE COCINA)

1 Toque el botón **POPCORN** una vez para palomitas de maiz regular.
2 Veces -- tamaño regular ligero
3 Veces -- tamaño de snack

POPCORN

ALIMENTO	CANTIDAD
Popcorn (Palomitas de maíz)	3.5 onzas (regular) 2.85 - 3.5 onzas (regular ligero) 1.5 or 1.75 onzas (ligero)
Fresh Vegetables (Verduras frescas)	1 - 4 tazas
Baked Potatoes (Papas asadas)	1 - 4 mediano
Frozen Vegetables (Verdura congelada)	1 - 4 tazas
Ground Meat (Carne molida)	.3 - 1.5 lb
Rice (Arroz)	.5 - 2.0 tazas
Frozen Entrees (Plato fuerte congelado)	6 - 17 onzas

KEEP WARM (MANTENER ALIMENTO CALIENTE)

1 Toque el botón **KEEP WARM**.
La función de mantener el alimento caliente se activa automáticamente y continúa durante 15 minutos.

KEEP WARM

HOT WATER (AGUA CALIENTE)

Toque el botón **HOT WATER** tres veces para calentar 3 tazas de agua o oprima hasta que aparezca la cantidad deseada.

HOT WATER x 3

REHEAT (RECALENTAMIENTO)

1 Toque el botón **REHEAT**. (REHEAT)

2 Seleccione el nivel de REHEAT deseado.
(Ej: Toque 2 para recalentar sopa.) (2 2 x 2)

3 Toque el botón número 2 dos veces para 2 tazas.

4 Toque el botón **START**. (START MINUTE PLUS)

ALIMENTO	CANTIDAD
1. Casserole (Caserola)	1 - 4 tazas
2. Soup (Sopa)	1 - 4 tazas
3. Pizza	1 - 4 pedazas
4. Beverage (Bebida)	.5 - 2 tazas
5. Dinner Plate (Plato principal)	1 plato; regular, grande o pequeño
6. Fresh Rolls/Muffins (Pan fresco)	1 - 6 pedazas
7. Frozen Rolls/Muffins (Pan congelado)	1 - 6 pedazas
8.	

DEFROST CENTER (CENTRO DE DESCONGELACION)

1 Toque el botón que dice **STEAKS/CHOPS** 4 veces para preparar 2.0 lb. El horno empezará a funcionar automáticamente. El horno se apagará y mostrará las instrucciones a seguir. (STEAKS/ CHOPS x 4)

2 Después de realizar el paso 1, abra la puerta. Voltee el filete de carne y cubra cualquier porción que esté caliente. Cierre la puerta. Toque el botón **START**. (START MINUTE PLUS)

3 Después de realizar el paso 2, abra la puerta. Cubra cualquier porción que esté caliente. Cierre la puerta. Toque el botón **START**. (START MINUTE PLUS)

4 Cuando termine el ciclo de descongelar, cúbralo y déjelo reposar.

ALIMENTO	CANTIDAD
Ground Meat (Carne molida)	.5 a 2.0 libras
Steaks/Chops (Bistec/chuleta)	.5 a 3.0 libras
Boneless Poultry (Sin hueso aves)	.5 a 1.5 libras
Bone-in Poultry (Con hueso aves)	.5 a 3.0 libras

MUNUTE PLUS (MINUTO EXTRA)

Toque el botón **MINUTE PLUS** para un minuto al 100% de energla, o para añadir un minuto cuando cocine en el modo manual. Continúe tocándolo para añadir más minutos. (START MINUTE PLUS)

AUTO-TOUCH GUIDE

For more complete information and safety precautions, refer to your Operation Manual.

SET CLOCK

If 88:88 is in display, first touch **STOP/CLEAR** pad.

1. Touch **CLOCK** pad. [TIMER CLOCK]
2. Enter correct time of the day by touching numbers in sequence. (Ex. 12:30) [1 2 3 0]
3. Touch **CLOCK** pad again. [TIMER CLOCK]

MANUAL OPERATION

High Power Cooking

1. Enter cooking time by touching number pads. (Ex: 1 min. 30 sec.) [1 3 0]
2. Touch **START** pad. [START MINUTE PLUS]

Variable Power Cooking

1. After Step 1 above, touch **POWER LEVEL** pad 6 times. (Ex: 50%) [POWER LEVEL] x 6
2. Touch **START** pad. [START MINUTE PLUS]

POPCORN/COOK CENTER

1. Touch **POPCORN** pad: [POPCORN]
   once for regular size
   twice -- regular size light
   3 times -- snack size

FOOD	AMOUNT
Popcorn	3.5 oz. (Regular) 2.85 - 3.5 oz. (Regular Light) 1.5 or 1.75 oz. (Snack)
Fresh Vegetables	1 - 4 cups
Baked Potatoes	1 - 4 med.
Frozen Vegetables	1 - 4 cups
Ground Meat	.3 - 1.5 lb
Rice	.5 - 2.0 cups
Frozen Entrees	6 - 17 oz

KEEP WARM

1. Touch **KEEP WARM** pad. [KEEP WARM]

   Keep Warm starts automatically and continues for 15 minutes.

HOT WATER

Touch **HOT WATER** pad three times to heat 3 cups of water or hold down until desired quantity appears. [HOT WATER] x 3

REHEAT

1. Touch **REHEAT** pad. [REHEAT]
2. Select desired Reheat setting. (Ex: Touch 2 to reheat soup.) [2]
3. Touch number 2 pad twice for 2 cups. [2] x 2
4. Touch **START** pad. [START MINUTE PLUS]

FOOD	AMOUNT
1. Casserole	1 - 4 cups
2. Soup	1 - 4 cups
3. Pizza	1 - 4 slices
4. Beverage	.5 - 2 cups
5. Dinner Plate	1 plate; reg., lg. or sm.
6. Fresh Rolls/Muffins	1 - 6 pieces
7. Frozen Rolls/Muffins	1 - 6 pieces
8. Canned Vegetables	1 can; 8 oz or 15 oz

DEFROST CENTER

1. Touch **STEAKS/CHOPS** pad 4 times for 2.0 lb. The oven will start automatically. [STEAKS/ CHOPS] x 4

   The oven will stop and directions will be displayed.
2. After the 1st stage, open the door. Turn steak over and shield any warm portions. Close the door. Touch **START** pad. [START MINUTE PLUS]
3. After the 2nd stage, open the door. Shield any warm portions. Close the door. Touch **START** pad. [START MINUTE PLUS]
4. After defrost cycle ends, cover and let stand.

FOOD	AMOUNT
Ground Meat	.5 - 2.0 lb
Steaks/Chops	.5 - 3.0 lb
Boneless Poultry	.5 - 1.5 lb
Bone-in Poultry	.5 - 3.0 lb

MINUTE PLUS

Touch **MINUTE PLUS** pad for one minute at 100% power or to add a minute during manual cooking. Continue to touch for additional minutes. [START MINUTE PLUS]

Carousel® is a registered trademark of Sharp Corporation.

SHARP®

SHARP ELECTRONICS CORPORATION
Sharp Plaza, Mahwah, NJ 07430-2135

TINSEA966WRRZ-D31
Printed in Thailand