SHARP®

OPERATION MANUAL

MODEL

SMD2489ES

STAINLESS STEEL

MICROWAVE DRAWER™ SMD2489ES

CUSTOMER ASSISTANCE 2

CONSUMER LIMITED WARRANTY..... 3

PRECAUTIONS TO AVOID POSSIBLE EXPOSURE TO EXCESSIVE MICROWAVE ENERGY 4

IMPORTANT SAFETY INSTRUCTIONS.....5-6

INFORMATION YOU NEED TO KNOW.....7-9

PART NAMES.....10-11

BEFORE OPERATING.....12

CONNECTING YOUR APPLIANCE 13

MICROWAVE DRAWER™ COOKING 14-19

OTHER FEATURES 20-21

CLEANING AND CARE 22

BEFORE YOU CALL FOR SERVICE.....23

AUTO-TOUCH GUIDE..... 27-BACK COVER

REGISTER YOUR PRODUCT

Registering your new product is easy and offers benefits that help you get the most out of your Sharp product including:

- ✓ **Convenience**: If you ever need warranty support, your product information is already on file.
- ✓ **Communication**: Stay up to date with important notifications and special offers from SHARP.
- ✓ **Support**: Quickly access support content including Owner's Manuals, FAQ's, How-to Videos, and much more.

3 EASY WAYS TO REGISTER TODAY!

SCAN
Use the camera or QR code scanning application on your mobile device

Scan this QR Code on your mobile device

ONLINE
Visit our sites to learn more about your product at sharpusa.com and sbl.sharpusa.com

Visit http://www.sharpusa.com/register

CALL US
US **800-BE-SHARP**
800-237-4277
Mon-Fri: 7am-7pm CST
Sat-Sun: 9am-7pm CST

Contact a Sharp Advisor on the phone

PRODUCT SUPPORT

If you have questions about the setup or operation of your product, please refer to the corresponding section within this manual.

Additionally, visit www.sharpusa.com/support to access exclusive content about your product including:

- → FAQ's and How-To Videos
- → Find or Request Service
- → Purchase an Extended Warranty
- → Downloads including the Installation Guide, Spec Sheet, and Owner's Manual

CONTACT US

If at any time you have questions or comments concerning your SHARP product, please contact the SHARP Customer Assistance Center. We are available to assist you through multiple contact methods for your convenience:

EMAIL
Available 24/7
US: sharpusa.com

See the Contact Us section on our sites

CHAT ONLINE
Mon-Fri: 7am-7pm CST
Sat-Sun: 9am-7pm CST

U.S. | www.sharpusa.com/support

CALL US
US **800-BE-SHARP**
800-237-4277
Mon-Fri: 7am-7pm CST
Sat-Sun: 9am-7pm CST

Contact a Sharp Advisor on the phone

SHARP ELECTRONICS CORPORATION warrants to the first consumer purchaser that this Sharp brand product (the "Product"), when shipped in its original container, will be free from defective workmanship and materials, and agrees that it will, at its option, either repair the defect or replace the defective Product or part thereof with a new or remanufactured equivalent at no charge to the purchaser for parts or labor for the period(s) set forth below.

This warranty does not apply to any appearance items of the Product nor to the additional excluded item(s) set forth below nor to any Product the exterior of which has been damaged or defaced, which has been subjected to misuse, abnormal service or handling, or which has been altered or modified in design or construction.

In order to enforce the rights under this limited warranty, the purchaser should follow the steps set forth below and provide proof of purchase to the servicer.

The limited warranty described herein is in addition to whatever implied warranties may be granted to purchasers by law. ALL IMPLIED WARRANTIES INCLUDING THE WARRANTIES OF MERCHANTABILITY AND FITNESS FOR USE ARE LIMITED TO THE PERIOD(S) FROM THE DATE OF PURCHASE SET FORTH BELOW. Some states do not allow limitations on how long an implied warranty lasts, so the above limitation may not apply to you.

Neither the sales personnel of the seller nor any other person is authorized to make any warranties other than those described herein, or to extend the duration of any warranties beyond the time period described above on behalf of Sharp.

The warranties described herein shall be the sole and exclusive warranties granted by Sharp and shall be the sole and exclusive remedy available to the purchaser. Correction of defects, in the manner and for the period of time described herein, shall constitute complete fulfillment of all liabilities and responsibilities of Sharp to the purchaser with respect to the Product, and shall constitute full satisfaction of all claims, whether based on contract, negligence, strict liability or otherwise. In no event shall Sharp be liable, or in any way responsible, for any damages or defects in the Product which were caused by repairs or attempted repairs performed by anyone other than an authorized servicer. Nor shall Sharp be liable or in any way responsible for any incident or consequential economic or property damage. Some states do not allow the exclusion of incidental or consequential damages, so the above exclusion may not apply to you.

THIS LIMITED WARRANTY IS VALID ONLY IN THE FIFTY (50) UNITED STATES, THE DISTRICT OF COLUMBIA AND PUERTO RICO.

Your product model number & description:	SMD2489ES or Home Use Microwave Drawer. (Be sure to have this information available when you need service for your Product.)
Warranty period for this product:	One (1) year parts and labor including in-home service. The warranty period continues for an additional four (4) years, for a total of five (5) years, with respect to the magnetron tube in the Product for parts only; labor and service are not provided free of charge for this additional period.
Additional item(s) excluded from warranty coverage (if any):	Non-functional accessories and light bulbs.
Where to obtain service:	From a Sharp Authorized Servicer located in the United States. To find the location of the nearest Sharp Authorized Servicer, call Sharp toll free at 1-800-BE-SHARP (1-800-237-4277).
What to do to obtain service:	In-home service is provided for one year from date of purchase. In-home service can be arranged by calling 1-800-BE-SHARP. Be sure to have Proof of Purchase available.

TO OBTAIN SUPPLY, ACCESSORY OR PRODUCT INFORMATION, CALL 1-800-BE-SHARP or visit www.sharpusa.com. SAVE THE PROOF OF PURCHASE AS IT IS NEEDED SHOULD YOUR OVEN EVER REQUIRE WARRANTY SERVICE.

PRECAUTIONS TO AVOID POSSIBLE EXPOSURE TO EXCESSIVE MICROWAVE ENERGY

(a) Do not attempt to operate this oven with the door open since open-door operation can result in harmful exposure to microwave energy. It is important not to defeat or tamper with the safety interlocks.

(b) Do not place any object between the oven front face and the door or allow soil or cleaner residue to accumulate on sealing surfaces.

(c) Do not operate the oven if it is damaged. It is particularly important that the oven door close properly and that there is no damage to the: (1) door (bent), (2) hinges and latches (broken or loosened), (3) door seals and sealing surfaces.

(d) The oven should not be adjusted or repaired by anyone except properly qualified service personnel.

CAUTION FOR WIRELESS LAN

CAUTION FOR USAGE ABOUT WI-FI

- If you are using in the following areas, the operation cannot be guaranteed: near Bluetooth® wireless communications devices using the same frequency (2.4 GHz) as this product or specified low power wireless devices. There may also be issues in locations with devices, such as microwave ovens, that emit a magnetic field; as well as in areas with static electricity or radio disturbance, all of which can interfere with the Wi-Fi signal.
- Wireless connection and performance cannot be guaranteed for all routers or housing environments. In the following places, it is possible the Wi-Fi cannot reach or is disconnected: inside of a building made with concrete, reinforced metal, near an obstruction (e.g., a wall) or near a wireless communications device using the same frequency.
- Wireless LAN of this product corresponds to channels 1-13. It is not available to communicate with routers set up to other channels.

CAUTION FOR PERSONAL INFORMATION (RELATED TO SECURITY)

- Using a wireless LAN device has the possibility of interception when using Wi-Fi, regardless of password setting.
- Depending on the location where you are connecting your oven, ensure you have the right/authority to connect the appliance to the available Wi-Fi network.
- If disposing of unit, giving or selling to a third party, be sure to Reset Wi-Fi Settings as described in this manual. The wireless LAN function of the unit should be initialized (reset) in case of handover to a third party to avoid illegal access from unauthorized parties.

MINIMUM REQUIREMENTS FOR WI-FI/ROUTER SPECIFICATIONS:

- IEEE 802.11 b/g/n compatible WLAN
- 72.2Mbps receive and transmit PHY rate using 20MHz bandwidth
- 150Mbps receive and transmit PHY rate using 40MHz bandwidth
- 802.11i (WPA, WPA2). Open, shared key, and pair-wise key authentication services
- Wi-Fi WPS support

IMPORTANT REGULATORY INFORMATION

CAUTION Any changes or modifications to the appliance not expressly approved by the party responsible for compliance could void the user's authority to operate the appliance.

NOTE: This equipment has been tested and found to comply with the limits for a Class B digital device, pursuant to Part 15 of the FCC Rules. These limits are designed to provide reasonable protection against harmful interference in a residential installation. This equipment generates, uses and can radiate radio frequency energy and, if not installed and used in accordance with the instructions, may cause harmful interference to radio communications. However, there is no guarantee that interference will not occur in a particular installation. If this equipment does cause harmful interference to radio or television reception, which can be determined by turning the equipment off and on, the user is encouraged to try to correct the interference by one or more of the following measures:

- Reorient or relocate the receiving antenna.
- Increase the separation between the equipment and receiver.
- Connect the equipment to an outlet on a circuit different from that to which the receiver is connected.
- Consult the dealer or an experienced radio/TV technician for help.

SHARP HOME USE MICROWAVE DRAWER MODEL # SMD2489ES

This device complies with Part 15 of the FCC Rules. Operation is subject to the following two conditions: (1) This device may not cause harmful interference, and (2) this device must accept any interference received, including interference that may cause undesired operation.

- Contains FCC: RX3-B01
- Contains IC: 2878F-B01

Responsible Party:

Sharp Electronics Corporation

100 Paragon Drive, Montvale, NJ 07645

TEL: 1-800-BE-SHARP

www.sharpusa.com

READ ALL INSTRUCTIONS BEFORE USING

When using the appliance, basic safety precautions should be followed, including the following:

WARNING *To reduce the risk of burns, electric shock, fire, injury to persons or exposure to excessive microwave energy:*

1. Read all instructions before using the appliance.
2. Read and follow the specific "PRECAUTIONS TO AVOID POSSIBLE EXPOSURE TO EXCESSIVE MICROWAVE ENERGY" on page 4.
3. This appliance must be properly grounded. See page 7 for grounding instructions.
4. Install or locate this appliance only in accordance with the provided Installation Manual.
5. Some products such as whole eggs in shell and sealed containers—for example, closed glass jars—are able to rupture and should not be heated in the appliance.
6. Use this appliance only for its intended use as described in this manual. Do not use corrosive chemicals or vapors in this appliance. This appliance is specifically designed to heat, cook or dry food. It is not designed for industrial or laboratory use.
7. As with any appliance, close supervision is necessary when used by children.
8. Do not operate this appliance if it has a damaged cord or plug, if it is not working properly or if it has been damaged or dropped.
9. This appliance should be serviced only by qualified service personnel. Contact nearest Sharp Authorized Servicer for examination, repair or adjustment.
10. Do not cover or block any openings on the appliance.
11. Do not store or use this appliance outdoors. Do not use this product near water—for example, near a kitchen sink, in a wet basement, near a swimming pool or similar locations.
12. Do not immerse cord or plug in water.
13. Keep cord away from heated surfaces.
14. Do not climb or sit on the appliance.
15. Be sure that fingers or other objects or materials are not around the appliance opening when the appliance is closed.
16. Do not put fingers or clothes around the drawer guides when the appliance is opened or closed. They could be caught in the guides when the appliance is closed.
17. Be sure that the food and container are shorter than the drawer before closing it. You can refer to the height of the side walls of the drawer.
18. When cleaning appliance sealing surfaces that come together on closing the drawer, use only mild, nonabrasive soaps or detergents applied with a sponge or soft cloth. See cleaning instructions on page 22.
19. To reduce the risk of fire in the appliance cavity:
    - **a** Do not overcook food. Carefully attend appliance when paper, plastic or other combustible materials are placed inside the appliance to facilitate cooking.
    - **b** Remove wire twist-ties from paper or plastic bags before placing bag in appliance.
    - **c** If materials inside the appliance ignite, keep appliance door closed, turn microwave off and shut off power at the fuse or circuit breaker panel.
    - **d** Do not use the appliance for storage purposes. Do not leave paper products, cooking utensils, or food in the appliance when not in use.
20. Liquids, such as water, coffee or tea are able to be overheated beyond the boiling point without appearing to be boiling due to surface tension of the liquid. Visible bubbling or boiling when the container is removed from the appliance is not always present. THIS COULD RESULT IN VERY HOT LIQUIDS SUDDENLY BOILING OVER WHEN A SPOON OR OTHER UTENSIL IS INSERTED INTO THE LIQUID.

    To reduce the risk of injury to persons:
    - **a** Do not overheat the liquid.
    - **b** Stir the liquid both before and halfway through heating it.
    - **c** Do not use straight-sided containers with narrow necks. Use a wide-mouthed container.
    - **d** After heating, allow the container to stand in the appliance at least for 20 seconds before removing the container.
    - **e** Use extreme care when inserting a spoon or other utensil into the container.
21. If the appliance light fails, consult a SHARP AUTHORIZED SERVICER.

SAVE THESE INSTRUCTIONS

ABOUT UNPACKING AND EXAMINING YOUR MICROWAVE DRAWER

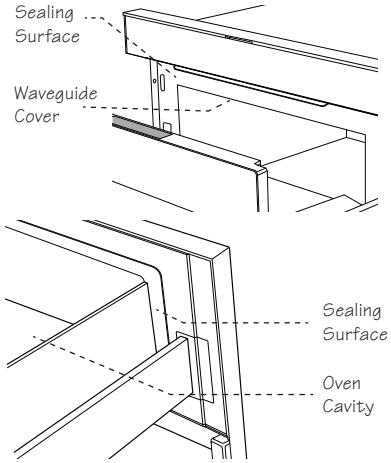

1 Remove all packing materials from inside the Microwave Drawer. DO NOT REMOVE THE WAVEGUIDE COVER, which is located on the top of the Microwave Drawer.

2 Remove the feature sticker, if there is one. Check the drawer for any damage, such as misaligned or bent drawer, damaged drawer seals and sealing surfaces, broken or loose drawer guides and dents inside the cavity or on the front side of the drawer. If there is any damage, do not operate the Microwave Drawer and contact your dealer or a SHARP AUTHORIZED SERVICER.

RADIO OR TV INTERFERENCE

Should there be any interference caused by the Microwave Drawer to your radio or TV, check that the Microwave Drawer is on a different electrical circuit, relocate the radio or TV as far away from the drawer as feasible or check position and signal of receiving antenna.

GROUNDING INSTRUCTIONS

This appliance must be grounded. The Microwave Drawer is equipped with a cord having a grounding wire with a grounding plug. It must be plugged into a wall receptacle that is properly installed and grounded in accordance with the National Electrical Code and local codes and ordinances. In the event of an electrical short circuit, grounding reduces risk of electric shock by providing an escape wire for the electric current.

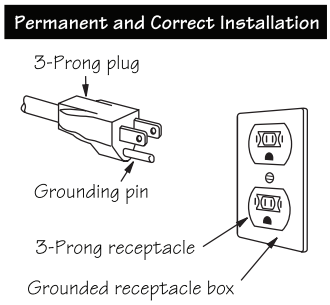

WARNING – Improper use of the grounding plug can result in a risk of electric shock. **Do not use an extension cord. If the power supply cord is too short, have a qualified electrician or serviceperson install an outlet near the appliance.**

If you have any questions about the grounding or electrical instructions, consult a qualified electrician or serviceperson.

ABOUT YOUR MICROWAVE DRAWER

ALWAYS have food in the Microwave Drawer when it is on to absorb the microwave energy.

The vent under the Microwave Drawer must not be blocked. During microwaving, steam may come from the left side lower vent (when facing the product).

When using the Microwave Drawer at power levels below 100%, you may hear the magnetron cycling on and off. It is normal for the exterior of the Microwave Drawer to be warm to the touch when cooking or reheating.

Condensation is a normal part of microwave cooking and the amount being vented is directly related to the moisture content of the food and room humidity. A cooler room will produce more condensation. Attention should be paid to the vented area after each use of the product and wiped down if needed.

The Microwave Drawer is for food preparation only. It should not be used to dry clothes or newspapers.

In using recipes or package directions, check food a minute or two before the minimum time and add time accordingly.

When opening or closing the Microwave Drawer quickly, food in the Microwave Drawer may be spilled. To clean, please refer to the Cleaning and Care section on page 22.

A good microwave cookbook is a valuable asset. Check it for microwave cooking principles, techniques, hints and recipes.

ABOUT MICROWAVE COOKING

- Arrange food carefully. Place thickest areas toward outside of dish.
- Watch cooking time. Cook for the shortest amount of time indicated and add more as needed. Food severely overcooked can smoke or ignite.
- Cover foods while cooking. Check recipe or cookbook for suggestions: paper towels, wax paper, microwave plastic wrap or a lid. Covers prevent spattering and help foods to cook evenly.
- Stir foods from outside to center of dish once or twice during cooking, if possible.
- Turn foods over once during microwaving to speed cooking of such foods as chicken and hamburgers. Large items like roasts must be turned over at least once.
- Rearrange foods such as meatballs halfway through cooking both from top to bottom and from right to left.
- Add standing time. Remove food from Microwave Drawer and stir, if possible. Cover for standing time which allows the food to finish cooking without overcooking.
- Check for doneness. Look for signs indicating that cooking temperatures have been reached.

  Doneness signs include:

  - Food steams throughout, not just at edge.
  - Center bottom of dish is very hot to the touch.

- Poultry thigh joints move easily.
- Meat and poultry show no pinkness.
- Fish is opaque and flakes easily with a fork.

ABOUT UTENSILS AND COVERINGS

It is not necessary to buy all new cookware. Many pieces already in your kitchen can be used successfully in your new Microwave Drawer. Make sure the utensil does not touch the interior walls during cooking.

Use these utensils for safe microwave cooking and reheating:

- glass ceramic (Pyroceram®), such as Corningware®
- heat-resistant glass (Pyrex®)
- microwave safe plastics
- microwave safe paper plates
- microwave safe pottery, stoneware and porcelain
- browning dish (Do not exceed recommended preheating time. Follow manufacturer's directions.)

These items can be used for short time reheating of foods that have little fat or sugar in them:

- wood, straw, wicker

DO NOT USE

- metal pans and bakeware
- dishes with metallic trim
- non-heat-resistant glass
- non-microwave safe plastics (margarine tubs)
- recycled paper products
- brown paper bags
- food storage bags
- metal twist-ties
- aluminum foil

Should you wish to check if a dish is safe for microwaving, place the empty dish in the oven and microwave on HIGH for 30 seconds. A dish which becomes very hot should not be used.

The following coverings are ideal:

- Paper towels are good for covering foods for reheating and absorbing fat while cooking bacon.
- Wax paper can be used for cooking and reheating.
- Plastic wrap that is specially marked for microwave use can be used for cooking and reheating. DO NOT allow plastic wrap to touch food. Vent so steam can escape.
- Lids that are microwave safe are a good choice because heat is kept near the food to hasten cooking.
- Oven cooking bags are good for large meats or foods that need tenderizing. DO NOT use metal twist-ties. Remember to slit bag so steam can escape.

ACCESSORIES There are many microwave accessories available for purchase. Evaluate carefully before you purchase so that they meet your needs. A microwave safe thermometer will assist you in determining correct doneness and assure you that foods have been cooked to safe temperatures. Sharp is not responsible for any damage to the Microwave Drawer when accessories are used.

ABOUT CHILDREN AND THE MICROWAVE

Children below the age of 7 should use the Microwave Drawer with a supervising person very near to them. Between the ages of 7 and 12, the supervising person should be in the same room. The child must be able to reach the Microwave Drawer comfortably.

At no time should anyone be allowed to lean or swing on the Microwave Drawer.

Children should be taught all safety precautions: use potholders, remove coverings carefully, pay special attention to packages that crisp food because they may be extra hot.

Don't assume that because a child has mastered one cooking skill he/she can cook everything.

Children need to learn that the Microwave Drawer is not a toy. See page 21 for Control Lock feature.

ABOUT SAFETY

- Check foods to see that they are cooked to the United States Department of Agriculture's recommended temperatures.

145°F	-	Fish.
160°F	-	Pork, ground beef/veal/lamb, egg dishes
165°F	-	For leftover, ready-to-reheat refrigerated, and deli and carry-out "fresh" food. Whole, pieces and ground turkey/chicken/duck.

To test for doneness, insert a meat thermometer in a thick or dense area away from fat or bone. NEVER leave the thermometer in the food during cooking, unless it is approved for microwave use.

- ALWAYS use potholders to prevent burns when handling utensils that are in contact with hot food. Enough heat from the food can transfer through utensils to cause skin burns.
- Avoid steam burns by directing steam away from the face and hands. Slowly lift the farthest edge of a dish's covering and carefully open popcorn and oven cooking bags away from the face.
- Stay near the Microwave Drawer while it's in use and check cooking progress frequently so that there is no chance of overcooking food.
- NEVER use the Microwave Drawer for storing cookbooks or other items.
- Select, store and handle food carefully to preserve its high quality and minimize the spread of foodborne bacteria.
- Keep waveguide cover clean. Food residue can cause arcing and/or fires. See page 22.

ABOUT FOODS

FOOD	DO	DON'T
Eggs, sausages, fruits & vegetables	• Puncture egg yolks before cooking to prevent bursting. • Pierce skins of potatoes, apples, squash, hot dogs and sausages so that steam escapes.	• Cook eggs in shells. • REHEAT whole eggs. • Dry nuts or seeds in shells.
Popcorn	• Use specially bagged popcorn for the microwave. • Listen while popping corn for the popping to slow to 1 or 2 seconds or use special **POPCORN** pad.	• Pop popcorn in regular brown bags or glass bowls. • Exceed maximum time on popcorn package.
Baby food	• Transfer baby food to small dish and heat carefully, stirring often. Check temperature before serving. • Put nipples on bottles after heating and shake thoroughly. "Wrist" test before feeding.	• Heat disposable bottles. • Heat bottles with nipples on. • Heat baby food in original jars.
General	• Cut baked goods with filling after heating to release steam and avoid burns. • Stir liquids briskly before and after heating to avoid "eruption". • Use deep bowl, when cooking liquids or cereals, to prevent boilovers. • Food should be shorter than the Microwave Drawer. Please refer to the height of side walls of the drawer.	• Heat or cook in closed glass jars or airtight containers. • Can in the microwave as harmful bacteria may not be destroyed. • Deep fat fry. • Dry wood, gourds, herbs or wet papers.

MICROWAVE DRAWER

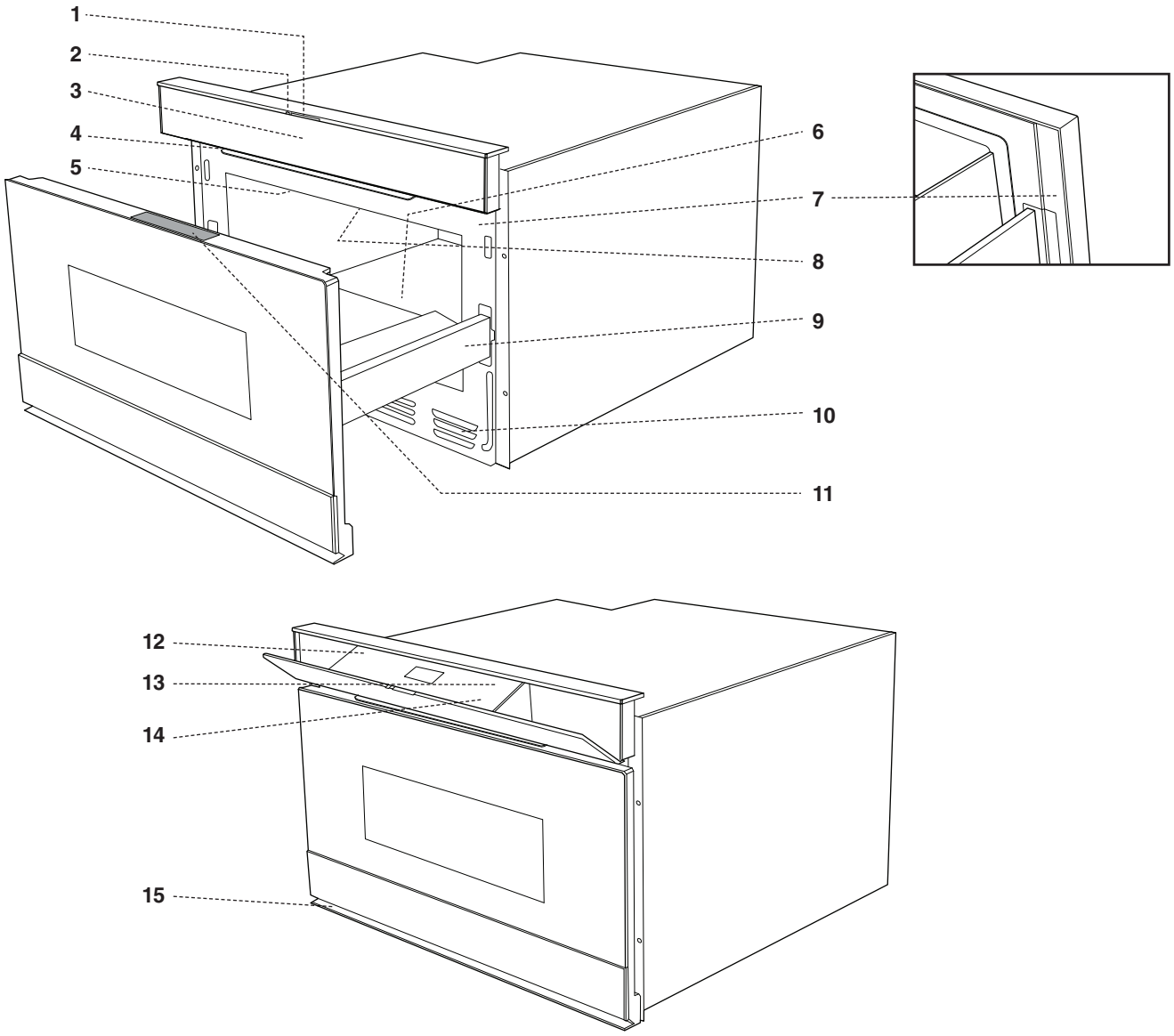

1 Easy Wave Open indicator
2 Wi-Fi indicator
3 Hidden control panel door
4 Easy Wave Open sensor
5 Waveguide cover DO NOT REMOVE
6 Nameplate: open the Microwave Drawer fully. The label is beyond the back wall of the microwave cavity facing up from the flat surface.
7 Drawer sealing surfaces
8 Drawer light
9 Microwave Drawer guides
10 Vent
11 Menu label
12 Glass touch control
13 Easy Wave Open button
14 Wi-Fi Connect button
15 Built-In flush mount

The glass touch control is hidden behind the control panel door on the top front face of the unit. To open, push in on the control panel. The panel will release and gently float to open. To close, push the panel upward to the closed position. The panel will be secured by magnetic latches in both open and closed positions.

GLASS TOUCH CONTROL

Numbers next to the glass touch control illustration indicate pages on which there are feature descriptions and usage information.

MENU LABEL

DEFROST	SENSOR COOK		MORE MENUS		
1 Ground Meat	1 Baked Potatoes	7 Longer Fresh Vegetables	Melt	1 Butter	7 Beverage Reheat
2 Steaks/Chops	2 Sweet Potatoes	8 Steamer Bag		2 Chocolate	8 Hot Water
3 Boneless Poultry	3 Fish/Seafood	9 Frozen Vegetables	Soften	3 Ice Cream	9 Hot Cereal
4 Bone-in Poultry	4 Brown Rice	10 Ground Meat		4 Cream Cheese	
5 Roast	5 White Rice	11 Frozen Entrees	Warm	5 Syrup	
6 Casserole or Soup	6 Quick Fresh Vegetables			6 Dessert Topping	

TLAB-B136MRRO

Before operating your new Microwave Drawer, make sure you read and understand this operation manual completely.

- Before the Microwave Drawer can be used, follow these steps:

1 Plug in the Microwave Drawer. ENJOY YOUR MICRO- WAVE TOUCH CLEAR will appear.

2 Touch the **STOP/CLEAR** pad. : will appear.

3 Set clock.

TO SET THE CLOCK

1 Touch **TIMER/SETTINGS** pad once. The display shows TO SET CLOCK ENTER TIME.

2 Touch number pads for correct time of day, press **START/+30 SEC**.

This is a 12 hour clock. If you attempt to enter an incorrect clock time, ERROR will appear in the display. Touch the **STOP/CLEAR** pad and re-enter the time.

- If the electrical power supply to your Microwave Drawer should be interrupted, the display will intermittently show ENJOY YOUR MICRO- WAVE TOUCH CLEAR after the power is reinstated. If this occurs during cooking, the program will be erased. The time of day will also be erased. Simply touch **STOP/CLEAR** pad and reset the clock for the correct time of day.

Note:

- The Microwave Drawer can be programmed with the drawer open except for **START/+30 SEC**.

STOP/CLEAR

Touch the **STOP/CLEAR** pad to:

1 Erase if you make a mistake during programming.

2 Cancel timer.

3 Stop the Microwave Drawer temporarily during timed cooking.

4 Return the time of day to the display.

5 Cancel a program during cooking, touch twice for timed cooking.

OPEN OR CLOSE MICROWAVE DRAWER

Press the **OPEN/CLOSE** pad on the glass touch control or wave twice on top left side of the drawer to open the microwave. The Easy Wave Open only works to open the microwave, not close. The Microwave Drawer also can be closed by gently pushing on the drawer. Do not pull the drawer by hand, except in the case of emergency, such as a power failure. If necessary, push or pull slowly.

EASY WAVE OPEN ON/OFF

Easy Wave Open's default setting is OFF when plugged in. The white light on the center of the panel will illuminate once Easy Wave Open has been activated. When Control Lock is activated, the Easy Wave Open function is off.

To use the Easy Wave Open function, simply wave your hand in front of the sensor twice in consecutive motions. This can be either up and down or side to side motions.

EASY WAVE OPEN ON

- Hold Number 5 on the glass touch control for 3 seconds. The display shows EASY WAVE OPEN ON.

EASY WAVE OPEN OFF

- Hold Number 5 on the glass touch control for 3 seconds. The display shows EASY WAVE OPEN OFF.

The Microwave Drawer combines the technological enhancements of smart home connectivity with Sharp's innovative Microwave Drawer design:

- Wi-Fi Connectivity
- Mobile App and Voice Control

Your Microwave Drawer may be operated remotely through a mobile device using the Sharp Kitchen app in addition to conventional operation in a non-connected capacity using the Glass Touch Control on the oven door. To use the app, the appliance must be connected to your home network.

WI-FI CONNECT

Your Microwave Drawer is equipped with Wi-Fi connectivity. For instructions and how-to-pair video please visit: http://www.sharpusa.com/support. The oven's Wi-Fi will need to be turned ON in order to complete the Pairing process.

TURN OVEN'S WI-FI ON

- Press the Number 0 pad and hold for 3 seconds.

TURN OVEN'S WI-FI OFF

- Press the Number 0 pad and hold for 3 seconds.

FAVORITES:

The Sharp Kitchen app lets you select and store your Favorite Smart Cook items in your FAVORITES section. Click on the heart icon to add your most frequently prepared dishes.

REMOTE START SAFETY INFORMATION

In order to operate the Microwave Drawer with the Sharp Kitchen app, you must enable the Remote Start feature. The oven is preset to Remote Start OFF. It must be turned ON to utilize.

- Press the **TIMER/SETTINGS** pad 3 times to access the Remote Start function.

When using mobile device operation to control the appliance remotely, be sure to follow all safety procedures and guidelines as instructed in the Operation Manual. Failure to do so may result in personal injury, death or damage to property.

IMPORTANT NOTE:

There is a 3-minute window, after opening and closing the drawer, in which you may operate the oven remotely with the app. After 3 minutes of inactivity, you must operate the oven manually at the control panel or open and close the drawer again to operate remotely.

- If you activate the appliance remotely, your oven will remain ON and in cooking mode even if your mobile device or home Wi-Fi become disabled.

ALWAYS ensure the oven cavity is prepared for cooking when operating the oven remotely with the app. Risk of oven damage or fire could occur. NEVER use the oven interior as a storage device for unrelated items or cook using the app remotely if the cavity is not properly prepared. ALWAYS have food in the Microwave Drawer when it is on to absorb the microwave energy.

PAIRING

Pairing may be used to pair a new mobile device to the oven after the oven has already been connected to your home network.

For instructions and how-to-pair video please visit: http://www.sharpusa.com/support.

- Press the **TIMER/SETTINGS** pad 4 times to access the Pairing function.

WI-FI INFORMATION

Wi-Fi Information provides your oven's MAC address on your home network. This information may be requested if you contact SHARP Customer Assistance.

- Press the **TIMER/SETTINGS** pad 5 times to access the Wi-Fi Information function.

WI-FI FIRMWARE UPDATES

From time to time, updates to the oven's software will be released. Notifications will be sent via the Sharp Kitchen app for these updates. The firmware updates will be available on the product support page. Please visit: www.sharpusa.com/support for more information.

- Press the **TIMER/SETTINGS** pad 6 times to access the Wi-Fi Firmware Update function.

WI-FI RESET

Your oven's Wi-Fi settings may be cleared by using the Wi-Fi Reset function. Clearing of settings may need to be performed when a new router or Wireless LAN is installed in the home or if transferring ownership of the oven. See also CAUTION FOR PERSONAL INFORMATION (RELATED TO SECURITY) on page 5 for further information.

- Press the **TIMER/SETTINGS** pad 7 times to access the Wi-Fi Reset function.

TIME COOKING

Your Microwave Drawer can be programmed for 99 minutes 99 seconds (99.99). Always enter the seconds after the minutes, even if they are both zeros.

- Suppose you want to cook for 5 minutes at 100%.

1 Enter cooking time 5 0 0. 5.00 TOUCH START OR TOUCH POWER LEVEL

2 To cook at 100% power (High), touch **START/+30 SEC** pad.

TO SET POWER LEVEL

There are eleven preset power levels.

Using lower power levels increases the cooking time, which is recommended for foods such as cheese, milk and long slow cooking of meats. Consult a microwave cookbook or recipes for specific recommendations.

- Suppose you want to defrost for 5 minutes at 30%.

1 Enter defrost time 5 0 0. 5.00

2 Touch **POWER LEVEL** pad 8 times.

3 Touch **START/+30 SEC** pad.

TOUCH POWER LEVEL PAD NUMBER OF TIMES FOR DESIRED POWER	APPROXIMATE PERCENTAGE OF POWER	COMMON WORDS FOR POWER LEVELS
POWER LEVEL x 1	100%	High
POWER LEVEL x 2	90%	
POWER LEVEL x 3	80%	
POWER LEVEL x 4	70%	Medium High
POWER LEVEL x 5	60%	
POWER LEVEL x 6	50%	Medium
POWER LEVEL x 7	40%	
POWER LEVEL x 8	30%	Med Low/Defrost
POWER LEVEL x 9	20%	
POWER LEVEL x 10	10%	Low
POWER LEVEL x 11	0%	

SENSOR SETTINGS

Sharp's Sensor is a semi-conductor device that detects the vapor (moisture and humidity) emitted from the food as it heats. The sensor adjusts the cooking times and power levels for various foods and quantities.

USING SENSOR SETTINGS:

1 After the Microwave Drawer is plugged in, wait 2 minutes before using any sensor setting.

2 Be sure the exterior of the cooking container and the interior of the Microwave Drawer are dry. Wipe off any moisture with a dry cloth or paper towel.

3 The sensor works with foods at normal storage temperature. For example, popcorn would be at room temperature.

4 Any sensor selection can be programmed with More or Less Time Adjustment. See page 21.

5 More or less food than the quantity listed in the charts should be cooked following the guidelines in any microwave cookbook.

6 During the first part of sensor use, the food name will appear on the display. Do not open the Microwave Drawer or touch **STOP/CLEAR** during this part of the cycle. The measurement of vapor will be interrupted. If this occurs, an error message will appear. To continue cooking, touch the **STOP/CLEAR** pad and cook manually.

When the sensor detects the vapor emitted from the food, the remainder of cooking/reheating time will appear. The Microwave Drawer may be opened when the remaining time appears on the display. At this time, you may stir or season food, as desired.

7 Except for Popcorn, if the sensor does not detect vapor properly when cooking other foods, ERROR will be displayed, and the microwave will turn off.

8 Check food temperature after cooking. If additional time is needed, continue to cook manually.

9 Each food has a cooking hint. Touch the **TIMER/SETTINGS** pad when the HELP indicator is lighted in the display.

COVERING FOODS:

Some foods work best when covered. Use the cover recommended in the charts for these foods. See charts beginning at the bottom of this page and continuing on the following pages. You may refer to the hints by touching the **TIMER/SETTINGS** pad.

1. Casserole lid.
2. Plastic wrap: Use plastic wrap recommended for microwave cooking. Cover dish loosely; allow approximately 1/2 inch to remain uncovered to allow steam to escape. Plastic wrap should not touch food.
3. Wax paper: Cover dish completely; fold excess wrap under dish to secure. If dish is wider than paper, overlap two pieces at least one inch to cover.

Be careful when removing any covering to allow steam to escape away from you.

SENSOR

POPCORN, REHEAT, COOK

You can cook or reheat many foods and don't need to calculate cooking time or power level.

- Suppose you want to cook baked potatoes.

1 Touch **Cook** pad once. SEE LABEL SELECT FOOD NUMBER.

2 See Menu Label. Select desired food by touching number pad. Ex: Touch 1 for baked potatoes.

3 Touch **START/+30 SEC** pad.

Note:

- To heat or cook other foods or foods above or below the quantity allowed on the chart, cook manually.

POPCORN, REHEAT CHART

FOOD	AMOUNT	PROCEDURE
POPCORN	Only 1 package at a time	Only cook one microwave popcorn package at a time with the appropriate side facing up. After cooking, remove and open carefully to allow steam to escape.
	2.85 - 3.5 oz. (Regular / Regular light)	Touch **POPCOR**N pad once.
	1.2 - 1.75 oz. (Mini / Snack)	Touch **POPCORN** pad twice.
REHEAT	4 - 36 oz.	Use microwave safe cookware and cover with lid, plastic wrap or wax paper. NOTE: The tighter the cover, the hotter the food will be; however, it is necessary to leave a small vent for the steam/moisture to escape from the food as it heats. After reheating, stir well, if possible. Re-cover and allow to stand 2 to 3 minutes.

COOK CHART

FOOD	AMOUNT	PROCEDURE
1 Baked Potatoes **2** Sweet Potatoes	1 - 6 med 1 - 6 med	Pierce the potatoes at least 3 times each on the top, bottom and sides. Piercing allows steam to escape. Place on paper towel in Microwave Drawer. After cooking, remove from microwave, wrap in aluminum foil and let stand 5 to 10 minutes.
3 Fish/Seafood	0.25 - 2.0 lb.	Arrange fish or seafood in ring around shallow glass dish (roll fillet with edges underneath). Cover with vented plastic wrap. After cooking, let stand, covered, for 3 minutes.
4 Brown Rice **5** White Rice	0.5 - 2.0 cups 0.5 - 2.0 cups	Place rice into a deep casserole and add double quantity of water. Cover with lid or plastic wrap. After cooking, stir, cover and let stand 3 to 5 minutes or until all liquid has been absorbed. **Rice** — **Water** — **Size of casserole** .5 cup ..... 1 cup ..... 1.5 quarts 1 cup ..... 2 cups ..... 2 quarts 1.5 cups ..... 3 cups ..... 2.5 or 3 quarts 2 cups ..... 4 cups ..... 3 quarts or larger
6 Quick Fresh Vegetables Broccoli Brussels sprouts Cabbage Cauliflower (flowerets) Cauliflower (whole) Spinach Zucchini Baked apples	 0.25 - 2.0 lb. 0.25 - 2.0 lb. 0.25 - 2.0 lb. 0.25 - 2.0 lb. 1 med. 0.25 - 1.0 lb. 0.25 - 2.0 lb. 2 - 4 med.	Wash and place in casserole. Add no water if vegetables have just been washed. Cover with lid for tender vegetables. Use plastic wrap for tender-crisp vegetables. After cooking, stir, if possible. Let stand, covered, for 2 to 5 minutes.
7 Longer Fresh Vegetables Carrots, sliced Corn on the cob Green beans Winter squash: diced halves	 0.25 - 1.5 lb. 2 - 4 0.25 - 1.5 lb. 0.25 - 1.5 lb. 1 - 2	Place in casserole. Add 1 - 4 tablespoons water. Cover with lid for tender vegetables. Use plastic wrap cover for tender-crisp vegetables. After cooking, stir, if possible. Let stand, covered, for 2 to 5 minutes.
8 Steamer Bag	6 - 17 oz.	Place bag in the microwave drawer with the appropriate side facing up. Follow instructions on the bag. After cooking, remove and open carefully to allow steam to escape.
9 Frozen Vegetables	0.25 - 1.25 lb.	Add no water. Cover with lid or plastic wrap. After cooking, stir and let stand, covered, for 3 minutes.
10 Ground Meat	0.25 - 2.0 lb.	Use this setting to cook ground beef or turkey as patties or in a casserole to be added to other ingredients. Place patties on a microwave safe dish and cover with wax paper. Place ground meat in a casserole dish and cover with wax paper or plastic wrap. When microwave pauses, turn patties over or stir meat in casserole to break up large pieces. Re-cover and touch **START/+30 SEC**. After cooking, let stand, covered, for 2 to 3 minutes.
11 Frozen Entrées	6 - 17 oz.	Remove entrée from outer packaging and follow package directions for covering. After cooking, let stand, covered, for 1-3 minutes.

DEFROST

Use this feature to defrost the foods shown in the DEFROST CHART below.

1 Touch **DEFROST** pad.
SEE | LABEL | SELECT | FOOD | NUMBER

2 See Menu Label. Select desired food by touching the number pad. Ex: Touch 2 for steaks/chops. STEAKS | CHOPS | ENTER | WEIGHT

3 Enter weight by touching number pads. 1.0 Lb

4 Touch **START/+30 SEC** pad.

The oven will stop so that the food can be checked.

5 After the first stage, open the Microwave Drawer to turn steak over. Close the Microwave Drawer. Touch **START/+30 SEC** pad.

6 After each audible signal, turn food over and select **START/+30 SEC** again.

7 After defrost cycle ends, cover and let stand as indicated in the chart below.

Note:

- Defrost can be programmed with More or Less Time Adjustment. See page 21.
- To defrost other foods or foods above or below the weights allowed on the DEFROST CHART, see MANUAL DEFROST below.
- Check foods when oven signals. After final stage, small sections may still be icy. Let stand to continue thawing. Do not cook until all ice crystals are thawed.

DEFROST CHART

FOOD	AMOUNT	PROCEDURE
1 Ground Meat	0.5 - 2.0 lb	After each audible signal, remove any thawed pieces and select **START/+30 SEC** again. After cooking, let stand, covered, for 5 to 10 minutes.
2 Steaks/Chops	0.5 - 3.0 lb	After each audible signal, turn food over and select **START/+30 SEC** again. After cooking, let stand, covered, for 10 to 20 minutes.
3 Boneless Poultry	0.5 - 2.0 lb	After each audible signal, turn food over and select **START/+30 SEC** again. After cooking, let stand, covered, for 10 to 20 minutes.
4 Bone-in Poultry	0.5 - 3.0 lb	After each audible signal, turn food over and select **START/+30 SEC** again. After cooking, let stand, covered, for 10 to 20 minutes.
5 Roast	2.0 - 4.0 lb	After each audible signal, turn food over and select **START/+30 SEC** again. After cooking, let stand, covered, for 30 to 60 minutes.
6 Casserole Soup	2 - 6 cups 1 - 6 cups	After each audible signal, break apart and remove any defrosted part. At end, stir well and let stand, covered, for 5 to 10 minutes.

MANUAL DEFROST

If the food that you wish to defrost is not listed on the DEFROST CHART or is above or below the limits in the AMOUNT column on the DEFROST CHART, you need to defrost manually.

You can defrost any frozen food, either raw or previously cooked, by using POWER LEVEL at 30%. Follow the exact 3-step procedure found under TO SET POWER LEVEL on page 14. Estimate defrosting time and touch POWER LEVEL pad eight times for 30% power.

For either raw or previously cooked frozen food the rule of thumb is approximately 4 minutes per pound. For example, defrost 4 minutes for 1 pound of frozen spaghetti sauce.

Always stop the oven periodically to remove or separate the portions that are defrosted. If food is not defrosted at the end of the estimated defrosting time, program the oven in 1 minute increments on POWER LEVEL 30% until totally defrosted.

When using plastic containers from the freezer, defrost only long enough to remove from the plastic in order to place in a microwave safe dish.

MORE MENUS

MELT/SOFTEN/WARM

These features automatically compute the correct heating time and microwave power level for melting, softening and warming foods shown in the chart below.

1 Touch **MORE MENUS** pad once. SEE LABEL SELECT FOOD NUMBER

2 See Menu Label. Select desired food by touching number pad. Ex: Touch 2 for chocolate.

3 Repeat touching same number pad to select quantity. Ex: Touch 2 two more times for 1 square.

4 Touch **START/+30 SEC** pad.

Note:

- Melt/Soften/Warm can be programmed with More or Less Time Adjustment. See page 21.
- To melt, soften or warm other food or foods above or below the quantity allowed on the MELT/SOFTEN/WARM CHART, use manual operation.

MELT/SOFTEN/WARM CHART

FOOD	AMOUNT	PROCEDURE
Melt		Use a Pyrex measuring cup. Cover with plastic wrap.
1 Butter	2 tbsp 8 tbsp	After touching **MORE MENUS,** touch 1 two times for 2 tbsp. After touching **MORE MENUS**, touch 1 three times for 8 tbsp.
2 Chocolate	1 cup chips 1 square	After touching **MORE MENUS**, touch 2 two times for 1 cup chips. After touching **MORE MENUS**, touch 2 three times for 1 square.
Soften		DO NOT COVER.
3 Ice cream	1 pint 1.5 qt.	After touching **MORE MENUS**, touch 3 two times for 1 pint. After touching **MORE MENUS**, touch 3 three times for 1.5 quarts.
4 Cream cheese	3 oz. 8 oz.	After touching **MORE MENUS**, touch 4 two times for 3 oz. After touching **MORE MENUS**, touch 4 three times for 8 oz.
Warm		Use a Pyrex measuring cup. DO NOT COVER.
5 Syrup	0.25 cup 0.5 cup	After touching **MORE MENUS**, touch 5 two times for 0.25 cup. After touching **MORE MENUS**, touch 5 three times for 0.5 cup.
6 Dessert Toppings	0.25 cup 0.5 cup	After touching **MORE MENUS**, touch 6 two times for 0.25 cup. After touching **MORE MENUS**, touch 6 three times for 0.5 cup.

BEVERAGE REHEAT/HOT WATER/HOT CEREAL

These features enable you to reheat coffee or tea to restore to a more suitable drinking temperature or to make instant coffee, tea or hot cereal.

- Suppose you want to make 2 cups of coffee.

1 Touch **MORE MENUS** pad once. SEE LABEL SELECT FOOD NUMBER

2 See Menu Label. Select desired selection by touching number pad. Ex: Touch 8 to make coffee.

3 Repeating touching same number pad to select quantity. Ex: Touch 8 two more times for 2 cups of coffee.

4 Touch **START/+30 SEC** pad.

Note:

- BEVERAGE REHEAT/HOT WATER/HOT CEREAL can be programmed with More or Less Time Adjustment. See page 21.
- Should you attempt to enter more or less than the allowed amount, an error message will appear in the display.

BEVERAGE REHEAT/HOT WATER/HOT CEREAL CHART

FOOD	AMOUNT	PROCEDURE
7 Beverage Reheat	0.5 - 2 cups	This setting is good for restoring a cooled beverage to a better drinking temperature. Touch number 7 pad for a 0.5 cup increase per touch. Stir after heating.
8 Hot Water	1 - 6 cups	Use this setting for heating COLD TAP WATER to a temperature somewhat below the boiling point to make instant coffee or tea. Touch number 8 pad for 1 cup increase per touch. Stir liquid briskly before and after heating to avoid “eruption”.
9 Hot Cereal	1 - 6 servings	Use individual packets or bulk cereal in your favorite variety: oatmeal, oat bran, cream of wheat, farina or wheatena. Follow the package directions for the correct amount of water or milk. To prevent boilovers, it is very important to choose a large container because microwave cooking of cereal causes high boiling. Touch number 9 pad for 1 serving increase per touch. If the oven stops, stir and touch **START/+30 SEC**. After cooking, stir and let stand, covered, for 2 minutes.

TIMER/SETTINGS

If the electrical power supply to your Microwave Drawer should be interrupted, the display will intermittently show ENJOY YOUR MICRO- WAVE TOUCH CLEAR after the power is reinstated. If this occurs, the SETTINGS option you input will be erased. Simply touch **STOP/CLEAR** pad and reset.

TIMER

1 Touch **TIMER/SETTINGS** pad 2 times.

2 Enter time.

3 Touch **START/+30 SEC** pad.

To cancel timer, touch **STOP/CLEAR**.

AUDIBLE SIGNAL ELIMINATION

At the end of timed cook, beeps will sound. The audible signal can be turned off if you prefer quiet operation.

TO TURN SOUND OFF

1 Touch **TIMER/SETTINGS** pad 8 times. SOUND OFF ? TOUCH START

2 Touch **START/+30 SEC** pad. The display shows SOUND OFF

TO RESTORE SOUND

1 Touch **TIMER/SETTINGS** pad 8 times. SOUND ON ? TOUCH START

2 Touch **START/+30 SEC** pad. The display shows SOUND ON

END OF COOKING REMINDER

At end of timed cooking, the microwave will signal every 10 seconds for the first minute; then every 3 minutes until STOP/CLEAR pad is touched, up to one hour.

TO TURN REMINDER OFF

1 Touch **TIMER/SETTINGS** pad 9 times. The display shows REMIND SIGNAL OFF ? TOUCH START .

2 Touch **START/+30 SEC** pad. The display shows REMIND SIGNAL OFF .

TO TURN REMINDER SIGNAL BACK ON

1 Touch **TIMER/SETTINGS** pad 9 times. The display shows REMIND SIGNAL ON ? TOUCH START .

2 Touch **START/+30 SEC** pad. The display shows REMIND SIGNAL ON .

HELP

Each setting of Popcorn, Reheat, Cook, Defrost and Beverage has a cooking hint. If you wish to check, touch **TIMER/SETTINGS** whenever HELP is lighted in the Interactive Display for these and other manual operation hints.

AUTO START

If you wish to program the Microwave Drawer to begin cooking automatically at a designated time of day, follow this procedure.

1 Touch **TIMER/SETTINGS** pad 10 times. The display shows AUTO START TOUCH START.

2 Touch **START/+30 SEC** pad. ENTER START TIME

3 Enter start time. 4:30 TOUCH SETTINGS

4 Touch **TIMER/SETTINGS** pad. ENTER COOKING TIME

5 Touch the number pads to enter cooking time. 20.00 TOUCH START OR TOUCH POWER LEVEL . Touch **POWER LEVEL** pad repeatedly until the desired power level is reached. TOUCH START

6 Touch **START/+30 SEC** pad.

DEMONSTRATION MODE

TO SELECT DEMO MODE

1 Touch **TIMER/SETTINGS** pad 11 times. The display shows DEMO ON ? HOLD START 3 SEC .

2 Hold **START/+30 SEC** pad for 3 seconds. The display shows DEMO ON .

TO CANCEL DEMO MODE

1 Touch **TIMER/SETTINGS** pad 11 times. The display shows DEMO OFF ? TOUCH START .

2 Touch **START/+30 SEC** pad. The display shows DEMO OFF .

Note:

- Microwave Drawer doesn't heat in Demo Mode.
- Display counts down quickly.

+30 SEC

+30 SEC allows you to cook for 30 seconds at 100% by simply touching the **+30 SEC** pad. You can also extend cooking time in multiples of 30 seconds by repeatedly touching the +30 SEC pad during manual cooking.

Note:

- To use **+30 SEC,** touch pad within 3 minutes after cooking completion, after closing the drawer, or after touching the **STOP/CLEAR** pad once.
- If the **STOP/CLEAR** pad is touched twice, prior to the end of cooking, **+30 SEC** cannot be activated until the drawer has been opened and then closed.
- **+30 SEC** cannot be used with Sensor settings, REHEAT or DEFROST.

STANDBY MODE

This microwave will go into standby mode after a period of inactivity. The backlight of the display will automatically dim after 3 minutes if the unit has not been in operation. If the display is in standby mode, simply touch the control panel or open/close the door to return the backlight to maximum brightness.

CONTROL LOCK

The Control Lock prevents unwanted drawer operation such as by small children. The Microwave Drawer can be set so that the control panel and the automatic drawer mechanism are deactivated or locked.

TO LOCK

Touch **STOP/CLEAR** pad and hold for 3 seconds. The display shows LOCK ON .

TO UNLOCK

Touch **STOP/CLEAR** pad and hold for 3 seconds. The display shows LOCK OFF .

The **Control Lock** is canceled when the electrical power supply to your oven is interrupted. Set the **Control Lock** again when power to the oven is restored.

MULTIPLE SEQUENCE COOKING

Your Microwave Drawer can be programmed for up to 4 automatic cooking sequences, switching from one power level setting to another automatically.

Sometimes cooking directions tell you to start on one power level and then change to a different power level. Your Microwave Drawer can do this automatically.

1 First enter cooking time. Then touch **POWER LEVEL** pad once for 100% cooking or repeatedly touching **POWER LEVEL** pad for a lower power level.

2 Enter second cooking time. Repeat touching **POWER LEVEL** pad for desired level. You can follow this procedure up to 4 times. TOUCH START

3 Touch **START/+30 SEC** pad.

Note:

- If **POWER LEVEL** pad is touched once, HIGH will be displayed.
- If 100% is selected as the final sequence, it is not necessary to touch the **POWER LEVEL** pad.
- If you wish to know power level during cooking, simply touch the **POWER LEVEL** pad. As long as your finger is touching the **POWER LEVEL** pad, the power level will be displayed.

MORE OR LESS TIME ADJUSTMENT

Should you discover that you like any of the REHEAT or DEFROST settings slightly more done, touch the **POWER LEVEL** pad once after touching your selection. The display will show MORE .

For slightly less done, touch the **POWER LEVEL** pad twice after touching your selection. The display will show LESS .

INDICATORS LENS AND COLOR LEGEND

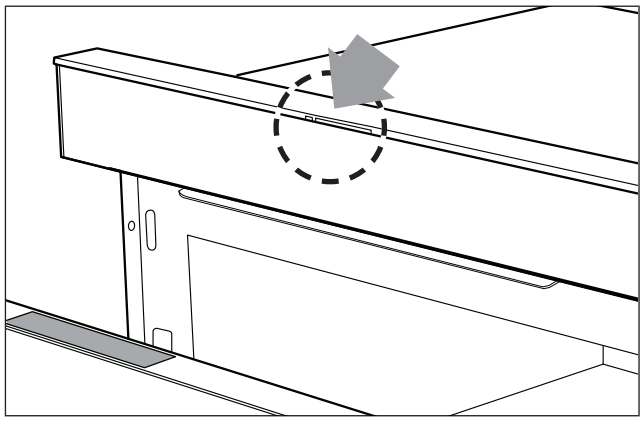

WI-FI STATUS	OVEN STATUS	COMMENTS
Wi-Fi Off	Wave Open Off	Oven on Standby (out of the box)
Wi-Fi On - blue light	Wave Open Off	Oven on Standby - Not Cooking
Wi-Fi Off	Wave Open On - white light	Oven on Standby - Not Cooking
Wi-Fi On - blue light	Wave Open On - white light	Oven on Standby - Not Cooking
Wi-Fi On - blue light	Cooking - green light	Slow Flash (1 second ON, 1 second OFF)- Sensor / On Full - Countdown
Wi-Fi On - blue light	Cooking - red light	Slow Flash (1 second ON, 1 second OFF) - Stopped, Ready to Open
Wi-Fi On - blue light	Cooking - yellow light	Slow Flash (1 second ON, 1 second OFF) - Time is Paused
Wi-Fi On - blue light	Remote Start Active - white light	Flash every 5 second (5 seconds ON, 1 second OFF) - Drawer opened, 3 minute window to remote operate App

CLEANING AND CARE

EXTERIOR

The outside surface is precoated metal and glass. Clean the outside with mild soap and water; rinse and dry with a soft cloth. Do not use any type of household or abrasive cleaner.

STAINLESS STEEL SURFACE

The exterior should be wiped often with a soft damp cloth and polished with a soft dry cloth to maintain its beauty. There are also a variety of products designed especially for cleaning and shining the stainless exterior of the oven. We recommend that the cleaner be applied to a soft cloth and then carefully used on the stainless exterior rather than sprayed directly on to it. Follow package directions carefully.

FRONT SIDE OF THE DRAWER

Wipe the window on both sides with a soft damp cloth to remove any spills or spatters. Metal parts will be easier to maintain if wiped frequently with a soft damp cloth. Avoid the use of spray and other harsh cleaners as they may stain, streak or dull the drawer surface.

TOUCH CONTROL PANEL

If desired, the touch pads may be deactivated before cleaning. See the Control Lock information on page 21 of this manual. Wipe the panel with a cloth dampened slightly with water only. Dry with a soft cloth. Do not scrub or use any sort of chemical cleaners. Close drawer and follow directions on page 21 for turning Control Lock off. Touch **STOP/CLEAR**.

INTERIOR

Before cleaning the Microwave Drawer, touch and hold the **STOP/CLEAR** button for 3 seconds to lock the control pad and the automatic door mechanism. The drawer can be locked in either the open or closed position. The display will show LOCK ON. This will prevent the drawer from accidentally opening or closing during cleaning. After cleaning, touch and hold the **STOP/CLEAR** button for 3 seconds to turn the lock off. The display will show LOCK OFF.

Cleaning is easy because no heat is generated to the interior surfaces; therefore, there is no baking and setting of spills or spattering. To clean the interior surfaces, including drawer sealing surfaces, wipe with a soft damp cloth. DO NOT USE ABRASIVE OR HARSH CLEANERS OR SCOURING PADS. For heavier soil, use mild soap; wipe clean with a soft damp cloth. Do not use any chemical oven cleaners.

MICROWAVE DRAWER GUIDES

Remove the food crumbs from the Microwave Drawer guides. Wipe with a soft dry cloth in order to keep the Microwave Drawer opening and closing smoothly.

WAVEGUIDE COVER

ATTENTION **The waveguide cover, located on the inside top of the Microwave Drawer area, is made from mica, so it requires special care. Keep the waveguide cover clean to assure good microwave performance. Carefully wipe with a soft damp cloth any food spatters from the surface of the cover immediately after they occur. Built-up splashes may overheat and cause smoke or possibly catch fire. Do not remove the waveguide cover.**

ODOR REMOVAL

Occasionally, a cooking odor may remain in the Microwave Drawer. To remove odor, combine 1 cup water, grated peel and juice of one lemon and several whole cloves in a 2-cup glass microwave safe measuring cup. Boil for several minutes using 100% power. Leave in the Microwave Drawer until water cools. Wipe interior with a soft cloth.

Please check the following before calling for service. It may save you time and expense.

	PROBLEM	POSSIBLE CAUSE	SOLUTION
1	Part or all of Microwave Drawer does not operate.	• Power cord of Microwave Drawer is not completely connected to the electrical outlet. • Power outage. • Fuse/circuit breaker at home doesn't work. • Microwave Drawer is in Demo Mode.	• Make sure the power cord is tightly connected to the outlet. • Check house lights to be sure. Call your local electric company for service. • Replace the fuse or reset the circuit breaker. • See page 20 for how to cancel Demo Mode.
2	Food in Microwave Drawer is not heated.	• No power to the appliance. • Drawer controls improperly set. • Drawer is in Demo Mode.	• See SOLUTION for PROBLEM 1. • Check if the controls have been properly set. • See page 20.
3	Microwave Drawer light does not work.	• Light bulb is loose or burned out.	• Call for service.
4	Touch controls will not operate.	• Control Lock is on.	• See page 21 to unlock.
5	Display flashes.	• Power failure.	• Touch Clear pad and reset the clock. If the Microwave Drawer was in use, you must reset the cooking function.
6	Steam from the vent.	• During microwaving, water vapor may come from the left side of the vent (when facing the microwave).	

NOTES

NOTES

OTHER FEATURES

TIMER/SETTINGS

See previous sections for specific details.

Touch **TIMER/SETTINGS** pad.

1 time for **Clock**.
2 times for **Timer**.
3 times for **Remote Start**.
4 times for **Pairing**.
5 times for **Wi-Fi Information**.
6 times for **Wi-Fi Firmware Update**.
7 times for **Wi-Fi Reset**.
8 times for **Sound On/Off**.
9 times for **End of Cooking Reminder On/Off**.
10 times for **Auto Start**.
11 times for **Demo Mode On/Off**.

STANDBY MODE

This microwave will go into standby mode after a period of inactivity. Simply touch the control panel or open/close the door to return the backlight to maximum brightness.

CONTROL LOCK

The Control Lock prevents unwanted oven/drawer operation such as by small children. The Microwave Drawer can be set so that the control panel is deactivated or locked.

To Lock

Touch **STOP/CLEAR** pad and hold for 3 seconds.

LOCK ON

To Unlock

Touch **STOP/CLEAR** pad and hold for 3 seconds.

LOCK OFF

AUTO-TOUCH GUIDE

For more complete information and safety precautions, refer to your Operation Manual.

MICROWAVE DRAWER

SET CLOCK

1 Touch **TIMER/SETTINGS** pad once.

2 Touch number pads for correct time of day and touch **START/+30 SEC** pad.

If the electrical power supply to your microwave drawer should be interrupted, the display will intermittently show:

ENJOY YOUR MICRO- WAVE TOUCH CLEAR

TIME COOKING

High Power Cooking

1 Enter cooking time by touching number pads. (Ex: 5 minutes)

5.00 TOUCH START OR TOUCH POWER LEVEL

2 Touch **START/+30 SEC** pad.

Variable Power Cooking

1 After step 1 above, touch **POWER LEVEL** pad until desired power level is in the display.

2 Touch **START/+30 SEC** pad.

SENSOR

Sensor automatically computes the correct time and power level to cook foods on the Menu Label perfectly.

1 Touch **COOK** pad once.

SEE LABEL SELECT FOOD NUMBER

2 See Menu Label. Select desired food by touching number pad. Ex: Touch 1 for baked potatoes.

3 Touch **START/+30 SEC** pad.

+30 SEC

Touch **START/+30 SEC** for 30 seconds at 100% microwave power or to add 30 seconds during manual cooking. Continue to touch for additional 30 seconds.

DEFROST

Use this feature to defrost the foods shown on the Menu Label.

1 Touch **DEFROST** pad.

SEE LABEL SELECT FOOD NUMBER

2 See Menu Label. Select desired food by touching the number pad. Ex: Touch 2 for steaks/chops.

STEAKS CHOPS ENTER WEIGHT

3 Enter weight by touching number pads.

1.0 Lb

4 Touch **START/+30 SEC** pad.

5 Microwave will stop to allow food to be turned over, and/or removed. Close the Microwave Drawer. Touch **START/+30 SEC** pad.

MORE MENUS

MELT / SOFTEN / WARM

Use these features to melt, soften or warm the foods shown on the Menu Label.

1 Touch **MORE MENUS** pad once.

SEE LABEL SELECT FOOD NUMBER

2 See Menu Label. Select desired food by touching the number pad. Ex: Touch 2 for chocolate.

CHOCO- LATE

3 Repeat touching same number pad to select quantity. Ex: touch 2 two more times for 1 square.

4 Touch **START/+30 SEC** pad.

BEVERAGE REHEAT / HOT WATER / HOT CEREAL

Use this feature for coffee, tea or hot cereal to reheat.

1 Touch **MORE MENUS** pad.

SEE LABEL SELECT FOOD NUMBER

2 See Menu Label. Select desired food by touching the number pad. Ex: Touch 8 for hot water.

HOT WATER

3 Repeat touching same number pad to select quantity. Ex: touch 8 two more times for 2 cups.

2 CUPS

4 Touch **START/+30 SEC** pad.

SHARP®

SHARP ELECTRONICS CORPORATION
100 Paragon Drive • Montvale, New Jersey 07645

TINSEB571MRR0