APPENDIX

Exhibit 2

SAR Test Plots

Date/Time: 04/07/04 12:41:14

Test Laboratory: JAPAN QUALITY ASSURANCE ORGANIZATION
File Name: Left_low_touch.da4

Cheek/Touch 0512ch (1850.20MHz)

DUT: GSM-PCS Phone with Bluetooth; Type: GX15; Serial: PP-236
Program: Left Head

Communication System: GSM 1900; Frequency: 1850.2 MHz;Duty Cycle: 1:8.5
Medium: HSL1900 (σ = 1.373 mho/m, ε_r = 38.73, ρ = 1000 kg/m^3)
Phantom section: Left Section
Measurement Standard: DASY4 (High Precision Assessment)

DASY4 Configuration:

- Probe: ET3DV6 - SN1678; ConvF(5.15, 5.15, 5.15); Calibrated: 2004/02/15
- Sensor-Surface: 4mm (Mechanical And Optical Surface Detection)
- Electronics: DAE3 Sn508; Calibrated: 2004/02/06
- Phantom: SAM 1194; Type: QD 000 P40 CA; Serial: 1194
- Measurement SW: DASY4, V4.1 Build 47; Postprocessing SW: SEMCAD, V1.6 Build 115

Cheek/Touch Position/Area Scan (13x8x1): Measurement grid: dx=10mm, dy=10mm
Reference Value = 8.91 V/m
Power Drift = 0.04 dB
Maximum value of SAR = 0.295 mW/g

Cheek/Touch Position/Zoom Scan (5x5x7)/Cube 0: Measurement grid: dx=8mm, dy=8mm, dz=5mm
Peak SAR (extrapolated) = 0.397 W/kg
SAR(1 g) = 0.274 mW/g; SAR(10 g) = 0.163 mW/g
Reference Value = 8.91 V/m
Power Drift = 0.04 dB
Maximum value of SAR = 0.303 mW/g

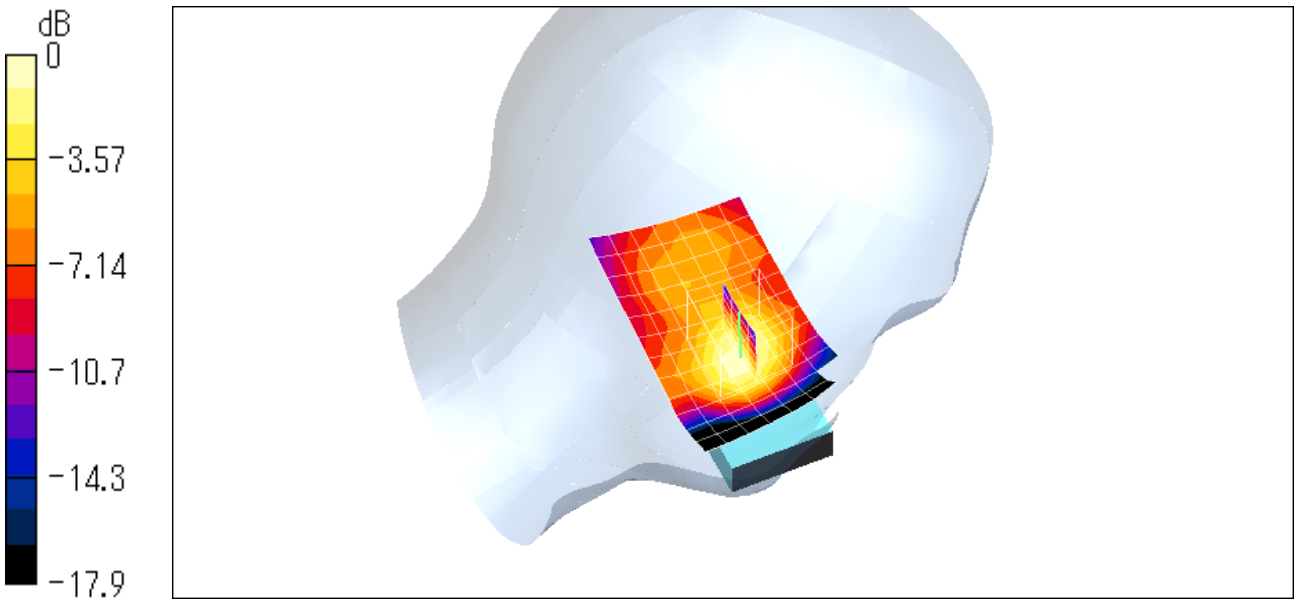

0 dB = 0.303mW/g

Date/Time: 04/07/04 13:02:56

Test Laboratory: JAPAN QUALITY ASSURANCE ORGANIZATION
File Name: Left_middle_touch.da4

Cheek/Touch 0661ch (1880.00MHz)

DUT: GSM-PCS Phone with Bluetooth; Type: GX15; Serial: PP-236
Program: Left Head

Communication System: GSM 1900; Frequency: 1880 MHz;Duty Cycle: 1:8.5
Medium: HSL1900 (σ = 1.373 mho/m, ε_r = 38.73, ρ = 1000 kg/m^3)
Phantom section: Left Section
Measurement Standard: DASY4 (High Precision Assessment)

DASY4 Configuration:

- Probe: ET3DV6 - SN1678; ConvF(5.15, 5.15, 5.15); Calibrated: 2004/02/15
- Sensor-Surface: 4mm (Mechanical And Optical Surface Detection)
- Electronics: DAE3 Sn508; Calibrated: 2004/02/06
- Phantom: SAM 1194; Type: QD 000 P40 CA; Serial: 1194
- Measurement SW: DASY4, V4.1 Build 47; Postprocessing SW: SEMCAD, V1.6 Build 115

Cheek/Touch Position/Area Scan (13x8x1): Measurement grid: dx=10mm, dy=10mm
Reference Value = 9.3 V/m
Power Drift = 0.08 dB
Maximum value of SAR = 0.304 mW/g

Cheek/Touch Position/Zoom Scan (5x5x7)/Cube 0: Measurement grid: dx=8mm, dy=8mm, dz=5mm
Peak SAR (extrapolated) = 0.415 W/kg
SAR(1 g) = 0.282 mW/g; SAR(10 g) = 0.166 mW/g
Reference Value = 9.3 V/m
Power Drift = 0.08 dB
Maximum value of SAR = 0.308 mW/g

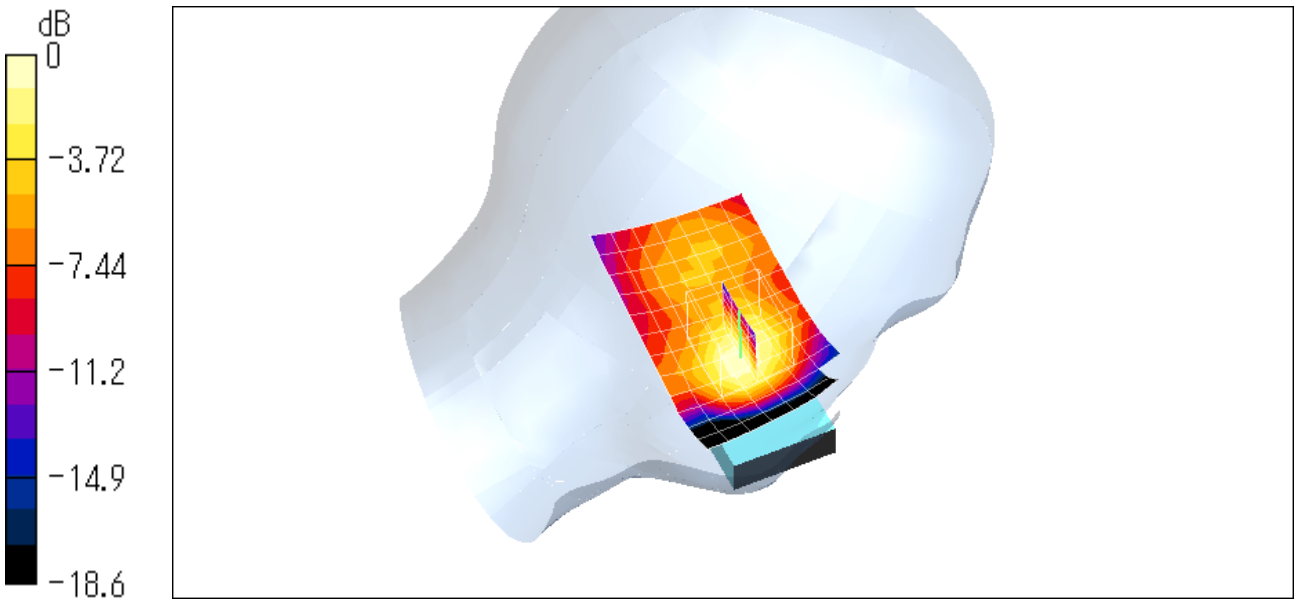

0 dB = 0.308mW/g

Date/Time: 04/07/04 13:24:26

Test Laboratory: JAPAN QUALITY ASSURANCE ORGANIZATION
File Name: Left_high_touch.da4

Cheek/Touch 0810ch (1909.80MHz)

DUT: GSM-PCS Phone with Bluetooth; Type: GX15; Serial: PP-236
Program: Left Head

Communication System: GSM 1900; Frequency: 1909.8 MHz;Duty Cycle: 1:8.5
Medium: HSL1900 (σ = 1.373 mho/m, ε_r = 38.73, ρ = 1000 kg/m^3)
Phantom section: Left Section
Measurement Standard: DASY4 (High Precision Assessment)

DASY4 Configuration:

- Probe: ET3DV6 - SN1678; ConvF(5.15, 5.15, 5.15); Calibrated: 2004/02/15
- Sensor-Surface: 4mm (Mechanical And Optical Surface Detection)
- Electronics: DAE3 Sn508; Calibrated: 2004/02/06
- Phantom: SAM 1194; Type: QD 000 P40 CA; Serial: 1194
- Measurement SW: DASY4, V4.1 Build 47; Postprocessing SW: SEMCAD, V1.6 Build 115

Cheek/Touch Position/Area Scan (13x8x1): Measurement grid: dx=10mm, dy=10mm
Reference Value = 9.95 V/m
Power Drift = -0.05 dB
Maximum value of SAR = 0.354 mW/g

Cheek/Touch Position/Zoom Scan (5x5x7)/Cube 0: Measurement grid: dx=8mm, dy=8mm, dz=5mm
Peak SAR (extrapolated) = 0.521 W/kg
SAR(1 g) = 0.349 mW/g; SAR(10 g) = 0.2 mW/g
Reference Value = 9.95 V/m
Power Drift = -0.05 dB
Maximum value of SAR = 0.387 mW/g

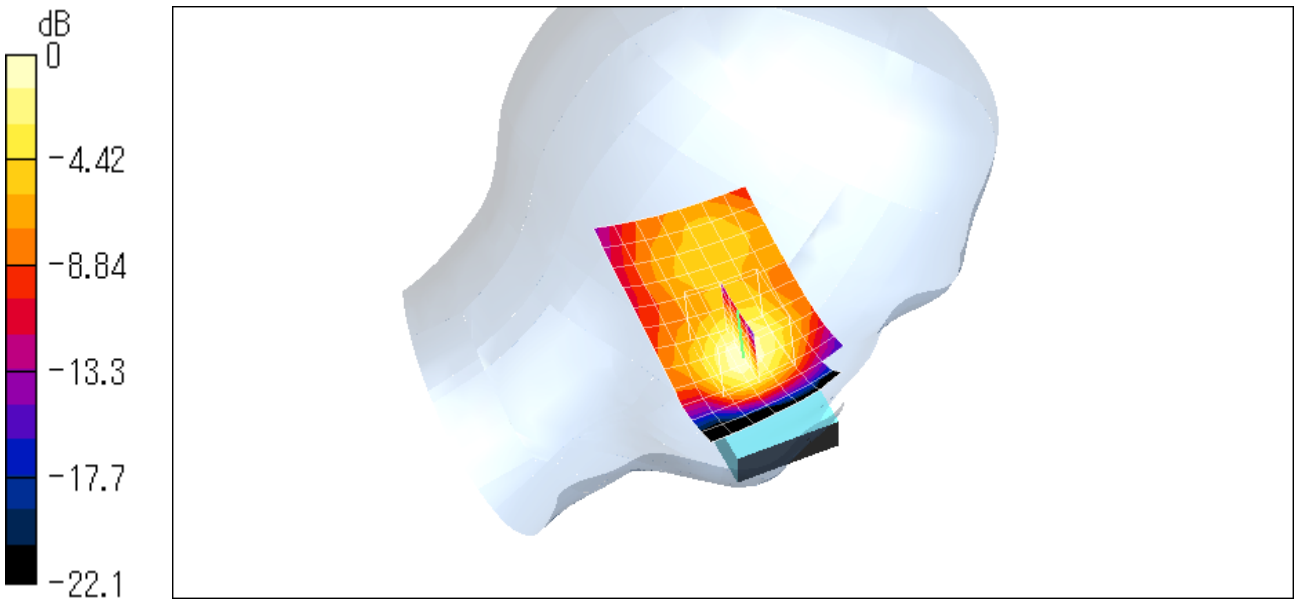

0 dB = 0.387mW/g

Date/Time: 04/07/04 15:05:06

Test Laboratory: JAPAN QUALITY ASSURANCE ORGANIZATION
File Name: Left_low_tilt.da4

Ear/Tilt 0512ch (1850.20MHz)

DUT: GSM-PCS Phone with Bluetooth; Type: GX15; Serial: PP-236
Program: Left Head

Communication System: GSM 1900; Frequency: 1850.2 MHz;Duty Cycle: 1:8.5
Medium: HSL1900 (σ = 1.373 mho/m, ε_r = 38.73, ρ = 1000 kg/m^3)
Phantom section: Left Section
Measurement Standard: DASY4 (High Precision Assessment)

DASY4 Configuration:

- Probe: ET3DV6 - SN1678; ConvF(5.15, 5.15, 5.15); Calibrated: 2004/02/15
- Sensor-Surface: 4mm (Mechanical And Optical Surface Detection)
- Electronics: DAE3 Sn508; Calibrated: 2004/02/06
- Phantom: SAM 1194; Type: QD 000 P40 CA; Serial: 1194
- Measurement SW: DASY4, V4.1 Build 47; Postprocessing SW: SEMCAD, V1.6 Build 115

Ear/Tilt Position/Area Scan (13x8x1): Measurement grid: dx=10mm, dy=10mm
Reference Value = 7.14 V/m
Power Drift = -0.1 dB
Maximum value of SAR = 0.0821 mW/g

Ear/Tilt Position/Zoom Scan (5x5x7)/Cube 0: Measurement grid: dx=8mm, dy=8mm, dz=5mm
Peak SAR (extrapolated) = 0.125 W/kg
SAR(1 g) = 0.0787 mW/g; SAR(10 g) = 0.0493 mW/g
Reference Value = 7.14 V/m
Power Drift = -0.1 dB
Maximum value of SAR = 0.0837 mW/g

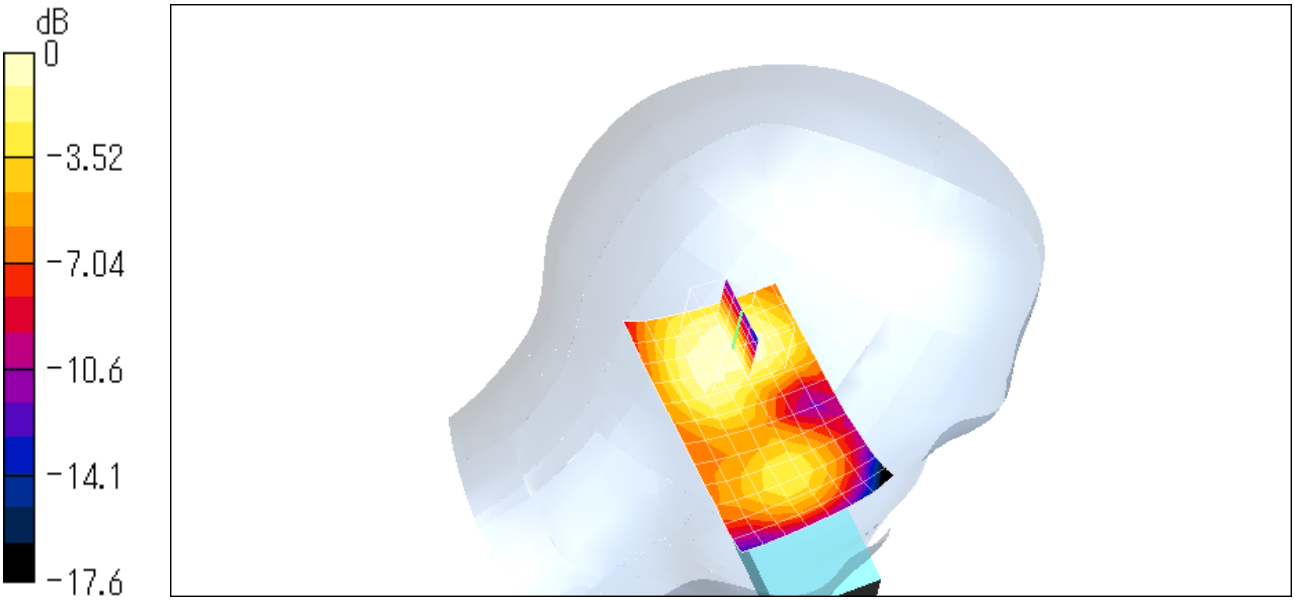

0 dB = 0.0837mW/g

Date/Time: 04/07/04 14:42:12

Test Laboratory: JAPAN QUALITY ASSURANCE ORGANIZATION
File Name: Left_middle_tilt.da4

Ear/Tilt 0661ch (1880.00MHz)

DUT: GSM-PCS Phone with Bluetooth; Type: GX15; Serial: PP-236
Program: Left Head

Communication System: GSM 1900; Frequency: 1880 MHz;Duty Cycle: 1:8.5
Medium: HSL1900 (σ = 1.373 mho/m, ε_r = 38.73, ρ = 1000 kg/m^3)
Phantom section: Left Section
Measurement Standard: DASY4 (High Precision Assessment)

DASY4 Configuration:

- Probe: ET3DV6 - SN1678; ConvF(5.15, 5.15, 5.15); Calibrated: 2004/02/15
- Sensor-Surface: 4mm (Mechanical And Optical Surface Detection)
- Electronics: DAE3 Sn508; Calibrated: 2004/02/06
- Phantom: SAM 1194; Type: QD 000 P40 CA; Serial: 1194
- Measurement SW: DASY4, V4.1 Build 47; Postprocessing SW: SEMCAD, V1.6 Build 115

Ear/Tilt Position/Area Scan (13x8x1): Measurement grid: dx=10mm, dy=10mm
Reference Value = 7.43 V/m
Power Drift = 0.07 dB
Maximum value of SAR = 0.0864 mW/g

Ear/Tilt Position/Zoom Scan (5x5x7)/Cube 0: Measurement grid: dx=8mm, dy=8mm, dz=5mm
Peak SAR (extrapolated) = 0.132 W/kg
SAR(1 g) = 0.0824 mW/g; SAR(10 g) = 0.0517 mW/g
Reference Value = 7.43 V/m
Power Drift = 0.07 dB
Maximum value of SAR = 0.0883 mW/g

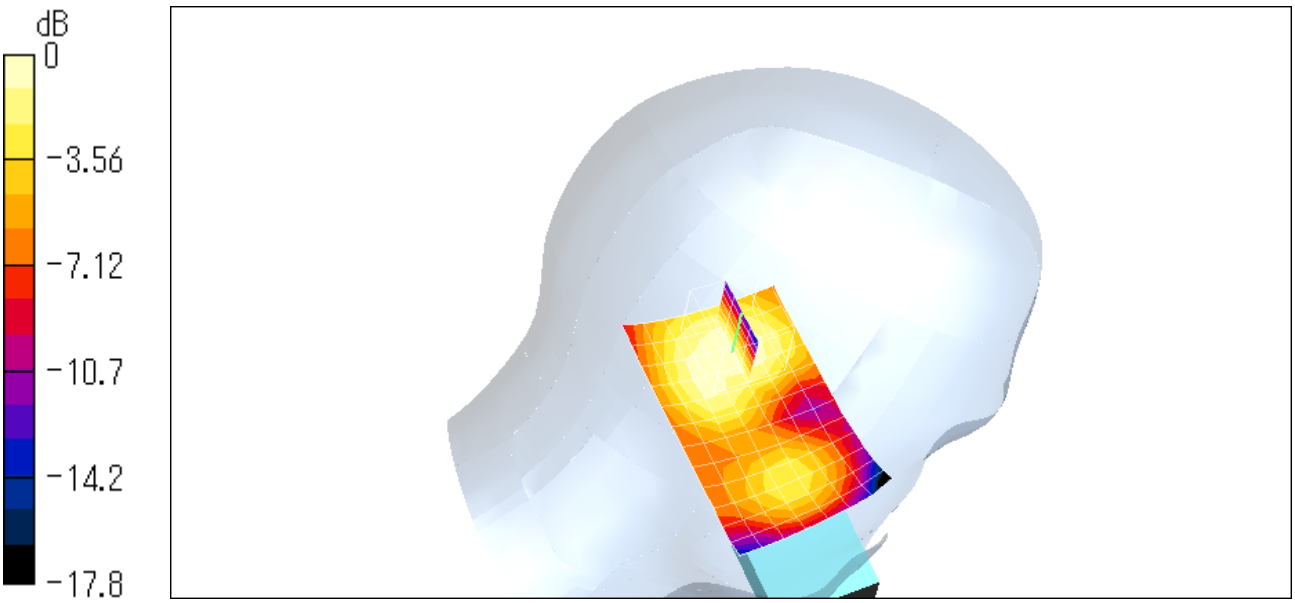

0 dB = 0.0883mW/g

Date/Time: 04/07/04 14:20:42

Test Laboratory: JAPAN QUALITY ASSURANCE ORGANIZATION
File Name: Left_high_tilt.da4

Ear/Tilt 0810ch (1909.80MHz)

DUT: GSM-PCS Phone with Bluetooth; Type: GX15; Serial: PP-236
Program: Left Head

Communication System: GSM 1900; Frequency: 1909.8 MHz;Duty Cycle: 1:8.5
Medium: HSL1900 (σ = 1.373 mho/m, ε_r = 38.73, ρ = 1000 kg/m^3)
Phantom section: Left Section
Measurement Standard: DASY4 (High Precision Assessment)

DASY4 Configuration:

- Probe: ET3DV6 - SN1678; ConvF(5.15, 5.15, 5.15); Calibrated: 2004/02/15
- Sensor-Surface: 4mm (Mechanical And Optical Surface Detection)
- Electronics: DAE3 Sn508; Calibrated: 2004/02/06
- Phantom: SAM 1194; Type: QD 000 P40 CA; Serial: 1194
- Measurement SW: DASY4, V4.1 Build 47; Postprocessing SW: SEMCAD, V1.6 Build 115

Ear/Tilt Position/Area Scan (13x8x1): Measurement grid: dx=10mm, dy=10mm
Reference Value = 8.41 V/m
Power Drift = -0.04 dB
Maximum value of SAR = 0.108 mW/g

Ear/Tilt Position/Zoom Scan (5x5x7)/Cube 0: Measurement grid: dx=8mm, dy=8mm, dz=5mm
Peak SAR (extrapolated) = 0.169 W/kg
SAR(1 g) = 0.103 mW/g; SAR(10 g) = 0.0635 mW/g
Reference Value = 8.41 V/m
Power Drift = -0.04 dB
Maximum value of SAR = 0.112 mW/g

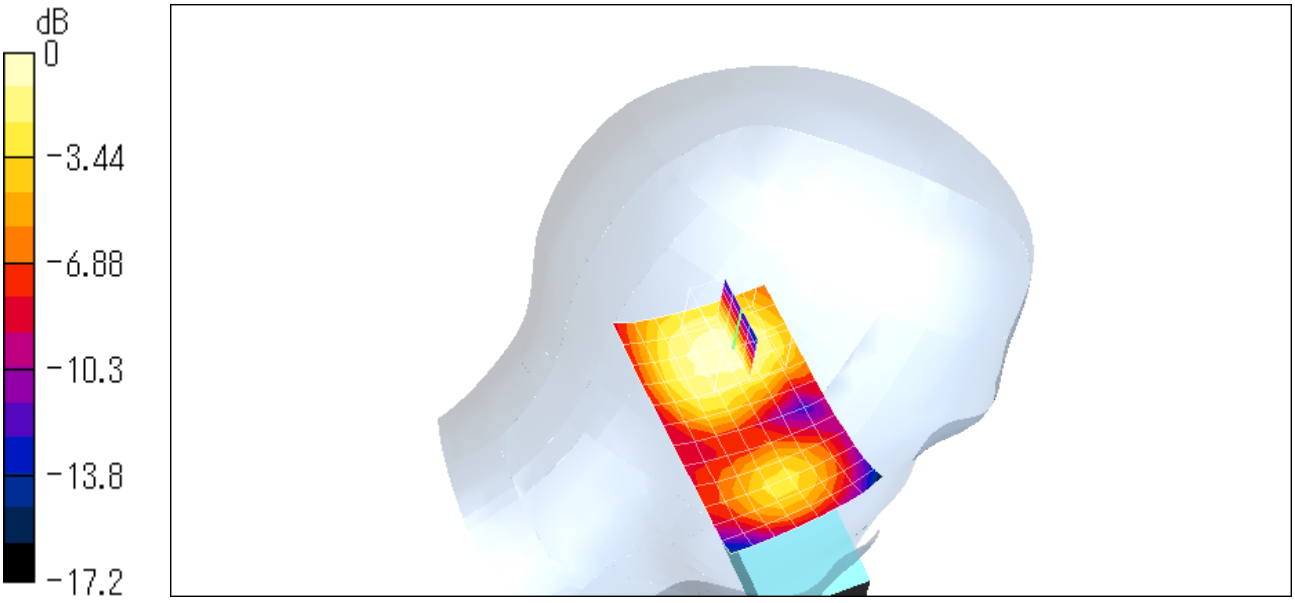

0 dB = 0.112mW/g

Date/Time: 04/07/04 18:46:50

Test Laboratory: JAPAN QUALITY ASSURANCE ORGANIZATION
File Name: Left_high_touch_BTLow.da4

Cheek/Touch 0810ch (1909.80MHz) with Bluetooth 2402MHz

DUT: GSM-PCS Phone with Bluetooth; Type: GX15; Serial: PP-236
Program: Left Head

Communication System: GSM 1900; Frequency: 1909.8 MHz;Duty Cycle: 1:8.5
Medium: HSL1900 (σ = 1.373 mho/m, ε_r = 38.73, ρ = 1000 kg/m^3)
Phantom section: Left Section
Measurement Standard: DASY4 (High Precision Assessment)

DASY4 Configuration:

- Probe: ET3DV6 - SN1678; ConvF(5.15, 5.15, 5.15); Calibrated: 2004/02/15
- Sensor-Surface: 4mm (Mechanical And Optical Surface Detection)
- Electronics: DAE3 Sn508; Calibrated: 2004/02/06
- Phantom: SAM 1194; Type: QD 000 P40 CA; Serial: 1194
- Measurement SW: DASY4, V4.1 Build 47; Postprocessing SW: SEMCAD, V1.6 Build 115

Cheek/Touch Position/Area Scan (13x8x1): Measurement grid: dx=10mm, dy=10mm
Reference Value = 10.3 V/m
Power Drift = -0.1 dB
Maximum value of SAR = 0.352 mW/g

Cheek/Touch Position/Zoom Scan (5x5x7)/Cube 0: Measurement grid: dx=8mm, dy=8mm, dz=5mm
Peak SAR (extrapolated) = 0.534 W/kg
SAR(1 g) = 0.352 mW/g; SAR(10 g) = 0.202 mW/g
Reference Value = 10.3 V/m
Power Drift = -0.1 dB
Maximum value of SAR = 0.389 mW/g

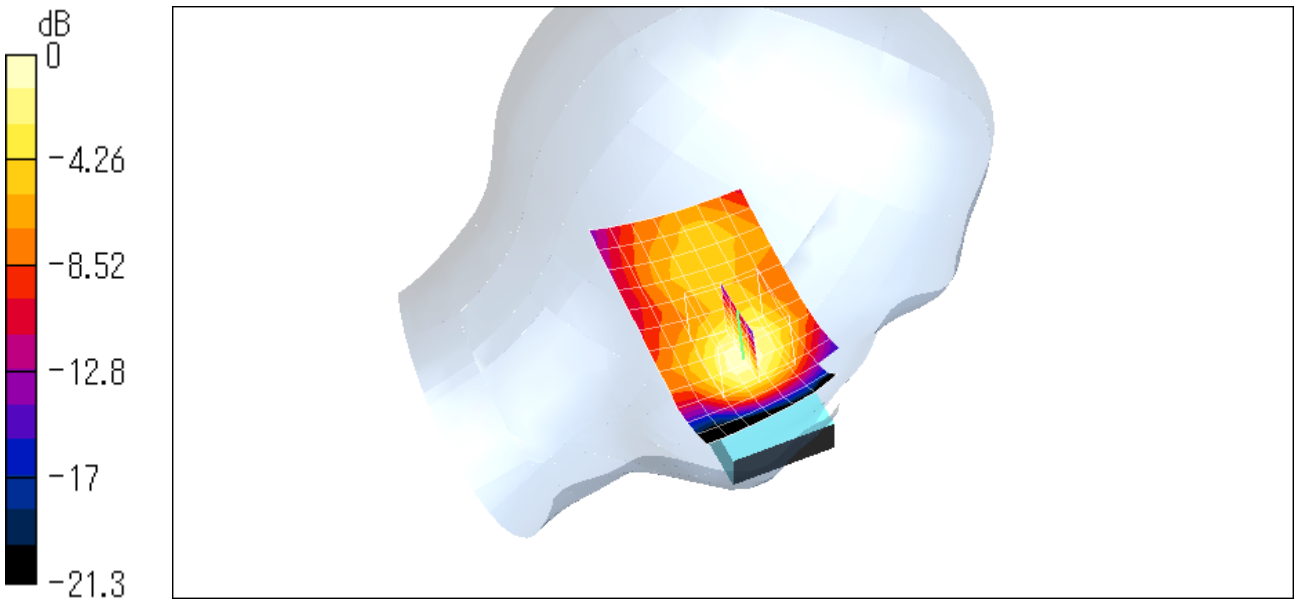

0 dB = 0.389mW/g

Date/Time: 04/07/04 19:14:38

Test Laboratory: JAPAN QUALITY ASSURANCE ORGANIZATION
File Name: Left_high_touch_BTMid.da4

Cheek/Touch 0810ch (1909.80MHz) with Bluetooth 2441MHz

DUT: GSM-PCS Phone with Bluetooth; Type: GX15; Serial: PP-236
Program: Left Head

Communication System: GSM 1900; Frequency: 1909.8 MHz;Duty Cycle: 1:8.5
Medium: HSL1900 (σ = 1.373 mho/m, ε_r = 38.73, ρ = 1000 kg/m^3)
Phantom section: Left Section
Measurement Standard: DASY4 (High Precision Assessment)

DASY4 Configuration:

- Probe: ET3DV6 - SN1678; ConvF(5.15, 5.15, 5.15); Calibrated: 2004/02/15
- Sensor-Surface: 4mm (Mechanical And Optical Surface Detection)
- Electronics: DAE3 Sn508; Calibrated: 2004/02/06
- Phantom: SAM 1194; Type: QD 000 P40 CA; Serial: 1194
- Measurement SW: DASY4, V4.1 Build 47; Postprocessing SW: SEMCAD, V1.6 Build 115

Cheek/Touch Position/Area Scan (13x8x1): Measurement grid: dx=10mm, dy=10mm
Reference Value = 9.89 V/m
Power Drift = -0.09 dB
Maximum value of SAR = 0.336 mW/g

Cheek/Touch Position/Zoom Scan (5x5x7)/Cube 0: Measurement grid: dx=8mm, dy=8mm, dz=5mm
Peak SAR (extrapolated) = 0.496 W/kg
SAR(1 g) = 0.334 mW/g; SAR(10 g) = 0.195 mW/g
Reference Value = 9.89 V/m
Power Drift = -0.09 dB
Maximum value of SAR = 0.371 mW/g

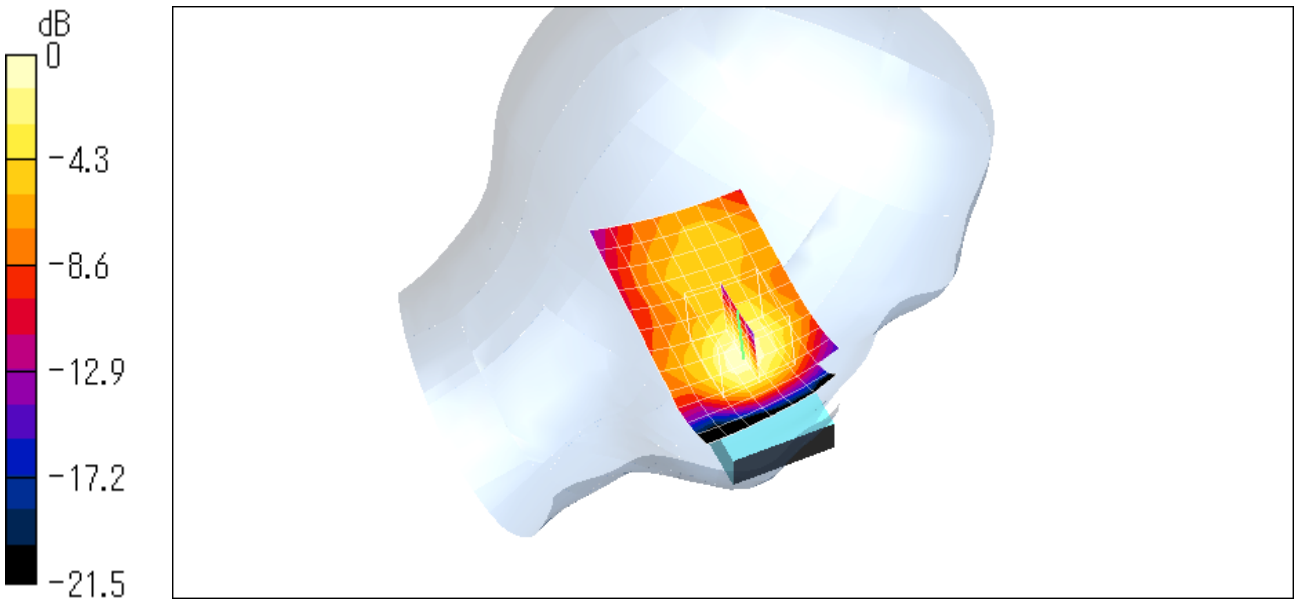

0 dB = 0.371mW/g

Date/Time: 04/07/04 19:41:46

Test Laboratory: JAPAN QUALITY ASSURANCE ORGANIZATION
File Name: Left_high_touch_BTHigh.da4

Cheek/Touch 0810ch (1909.80MHz) with Bluetooth 2480MHz

DUT: GSM-PCS Phone with Bluetooth; Type: GX15; Serial: PP-236
Program: Left Head

Communication System: GSM 1900; Frequency: 1909.8 MHz;Duty Cycle: 1:8.5
Medium: HSL1900 (σ = 1.373 mho/m, ε_r = 38.73, ρ = 1000 kg/m^3)
Phantom section: Left Section
Measurement Standard: DASY4 (High Precision Assessment)

DASY4 Configuration:

- Probe: ET3DV6 - SN1678; ConvF(5.15, 5.15, 5.15); Calibrated: 2004/02/15
- Sensor-Surface: 4mm (Mechanical And Optical Surface Detection)
- Electronics: DAE3 Sn508; Calibrated: 2004/02/06
- Phantom: SAM 1194; Type: QD 000 P40 CA; Serial: 1194
- Measurement SW: DASY4, V4.1 Build 47; Postprocessing SW: SEMCAD, V1.6 Build 115

Cheek/Touch Position/Area Scan (13x8x1): Measurement grid: dx=10mm, dy=10mm
Reference Value = 10.1 V/m
Power Drift = -0.08 dB
Maximum value of SAR = 0.347 mW/g

Cheek/Touch Position/Zoom Scan (5x5x7)/Cube 0: Measurement grid: dx=8mm, dy=8mm, dz=5mm
Peak SAR (extrapolated) = 0.514 W/kg
SAR(1 g) = 0.346 mW/g; SAR(10 g) = 0.2 mW/g
Reference Value = 10.1 V/m
Power Drift = -0.08 dB
Maximum value of SAR = 0.377 mW/g

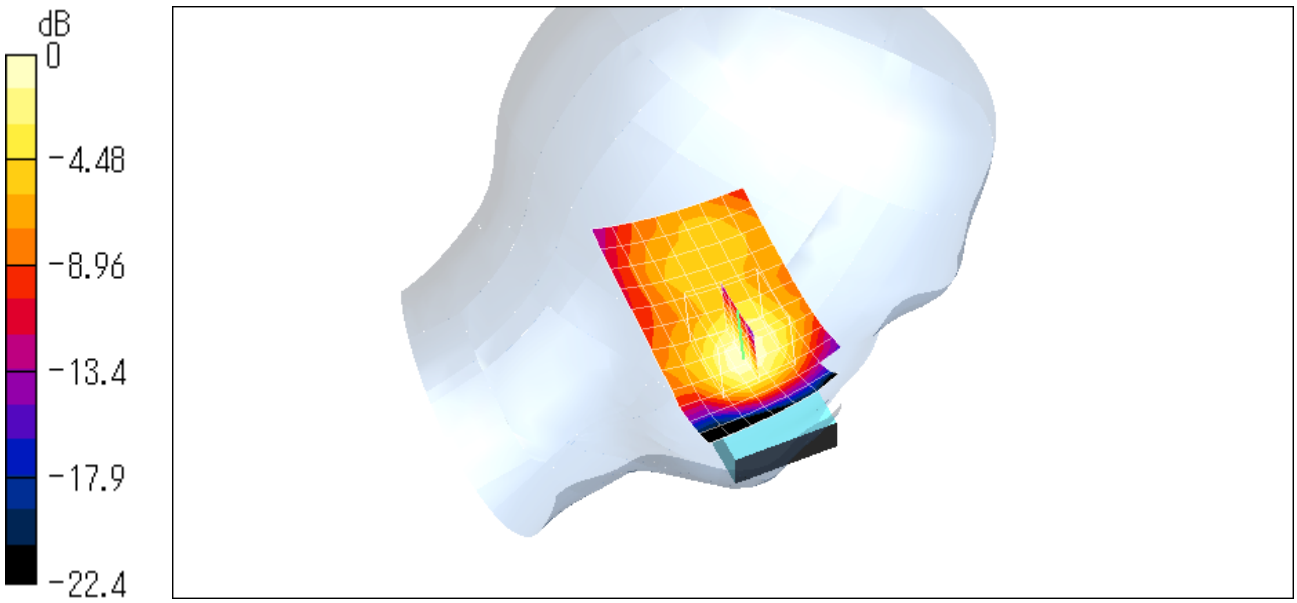

0 dB = 0.377mW/g

Date/Time: 04/07/04 16:28:24

Test Laboratory: JAPAN QUALITY ASSURANCE ORGANIZATION
File Name: Right_low_touch.da4

Cheek/Touch 0512ch (1850.20MHz)

DUT: GSM-PCS Phone with Bluetooth; Type: GX15; Serial: PP-236
Program: Right Head

Communication System: GSM 1900; Frequency: 1850.2 MHz;Duty Cycle: 1:8.5
Medium: HSL1900 (σ = 1.373 mho/m, ε_r = 38.73, ρ = 1000 kg/m^3)
Phantom section: Right Section
Measurement Standard: DASY4 (High Precision Assessment)

DASY4 Configuration:

- Probe: ET3DV6 - SN1678; ConvF(5.15, 5.15, 5.15); Calibrated: 2004/02/15
- Sensor-Surface: 4mm (Mechanical And Optical Surface Detection)
- Electronics: DAE3 Sn508; Calibrated: 2004/02/06
- Phantom: SAM 1194; Type: QD 000 P40 CA; Serial: 1194
- Measurement SW: DASY4, V4.1 Build 47; Postprocessing SW: SEMCAD, V1.6 Build 115

Cheek/Touch Position/Area Scan (13x8x1): Measurement grid: dx=10mm, dy=10mm
Reference Value = 8.21 V/m
Power Drift = 0.005 dB
Maximum value of SAR = 0.268 mW/g

Cheek/Touch Position/Zoom Scan (5x5x7)/Cube 0: Measurement grid: dx=8mm, dy=8mm, dz=5mm
Peak SAR (extrapolated) = 0.371 W/kg
SAR(1 g) = 0.259 mW/g; SAR(10 g) = 0.155 mW/g
Reference Value = 8.21 V/m
Power Drift = 0.005 dB
Maximum value of SAR = 0.279 mW/g

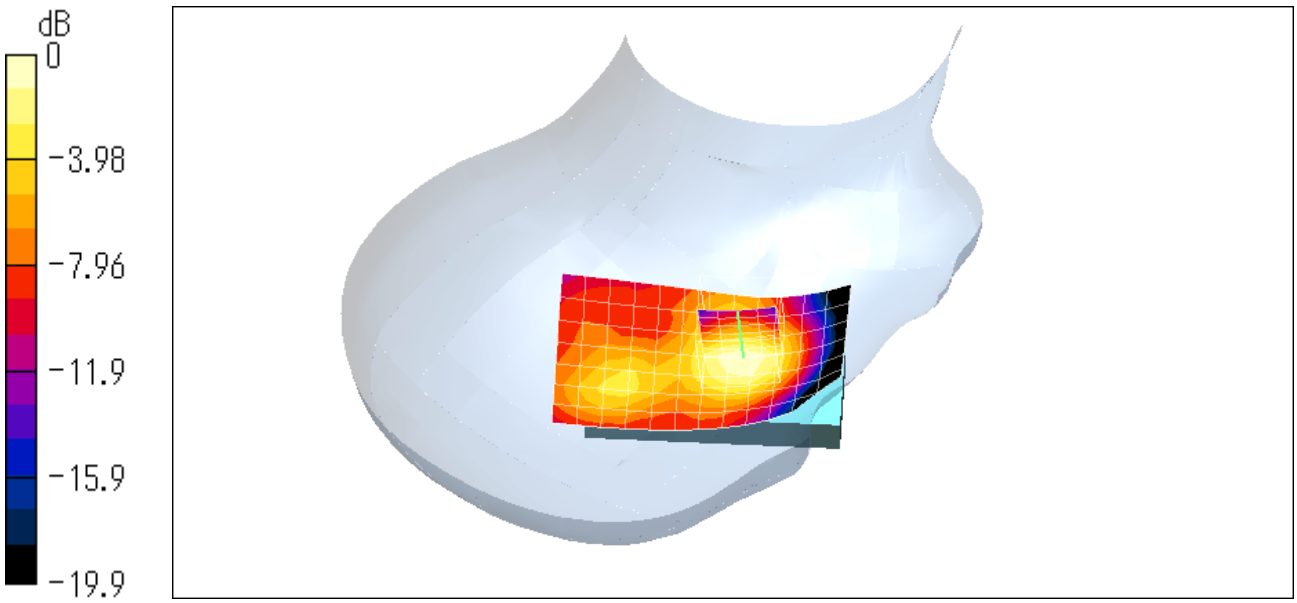

0 dB = 0.279mW/g

Date/Time: 04/07/04 16:07:10

Test Laboratory: JAPAN QUALITY ASSURANCE ORGANIZATION
File Name: Right_middle_touch.da4

Cheek/Touch 0661ch (1880.00MHz)

DUT: GSM-PCS Phone with Bluetooth; Type: GX15; Serial: PP-236
Program: Right Head

Communication System: GSM 1900; Frequency: 1880 MHz;Duty Cycle: 1:8.5
Medium: HSL1900 (σ = 1.373 mho/m, ε_r = 38.73, ρ = 1000 kg/m^3)
Phantom section: Right Section
Measurement Standard: DASY4 (High Precision Assessment)

DASY4 Configuration:

- Probe: ET3DV6 - SN1678; ConvF(5.15, 5.15, 5.15); Calibrated: 2004/02/15
- Sensor-Surface: 4mm (Mechanical And Optical Surface Detection)
- Electronics: DAE3 Sn508; Calibrated: 2004/02/06
- Phantom: SAM 1194; Type: QD 000 P40 CA; Serial: 1194
- Measurement SW: DASY4, V4.1 Build 47; Postprocessing SW: SEMCAD, V1.6 Build 115

Cheek/Touch Position/Area Scan (13x8x1): Measurement grid: dx=10mm, dy=10mm
Reference Value = 8.6 V/m
Power Drift = 0.01 dB
Maximum value of SAR = 0.301 mW/g

Cheek/Touch Position/Zoom Scan (5x5x7)/Cube 0: Measurement grid: dx=8mm, dy=8mm, dz=5mm
Peak SAR (extrapolated) = 0.413 W/kg
SAR(1 g) = 0.287 mW/g; SAR(10 g) = 0.17 mW/g
Reference Value = 8.6 V/m
Power Drift = 0.01 dB
Maximum value of SAR = 0.309 mW/g

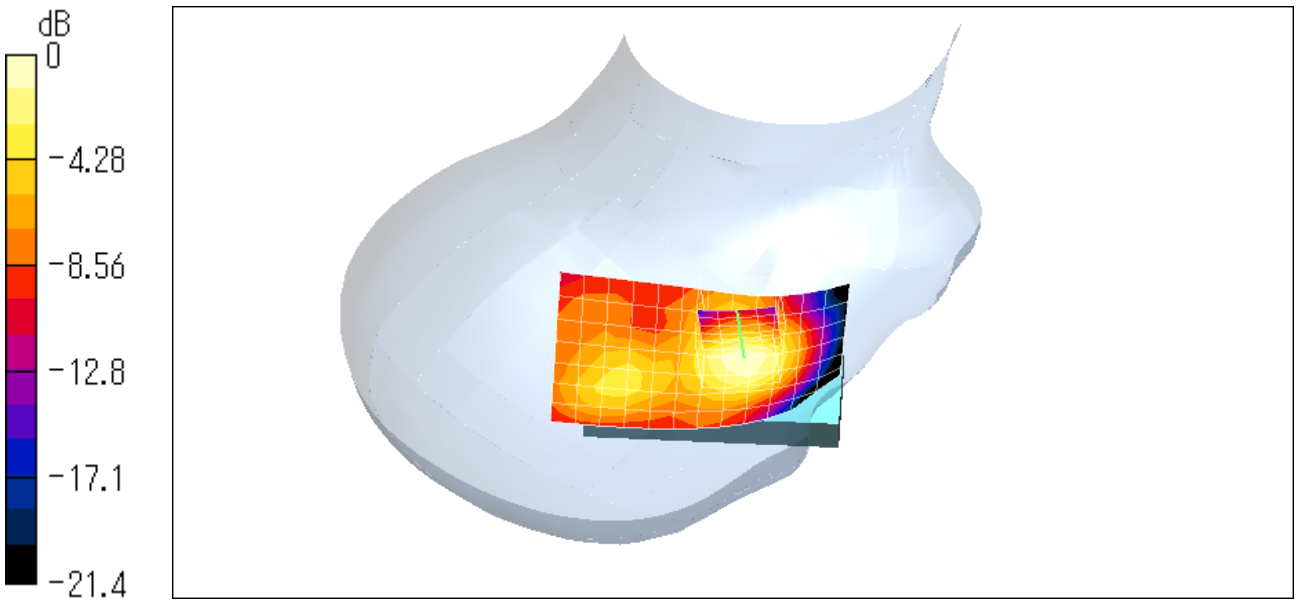

0 dB = 0.309mW/g

Date/Time: 04/07/04 15:38:56

Test Laboratory: JAPAN QUALITY ASSURANCE ORGANIZATION
File Name: Right_high_touch.da4

Cheek/Touch 0810ch (1909.80MHz)

DUT: GSM-PCS Phone with Bluetooth; Type: GX15; Serial: PP-236
Program: Right Head

Communication System: GSM 1900; Frequency: 1909.8 MHz;Duty Cycle: 1:8.5
Medium: HSL1900 (σ = 1.373 mho/m, ε_r = 38.73, ρ = 1000 kg/m^3)
Phantom section: Right Section
Measurement Standard: DASY4 (High Precision Assessment)

DASY4 Configuration:

- Probe: ET3DV6 - SN1678; ConvF(5.15, 5.15, 5.15); Calibrated: 2004/02/15
- Sensor-Surface: 4mm (Mechanical And Optical Surface Detection)
- Electronics: DAE3 Sn508; Calibrated: 2004/02/06
- Phantom: SAM 1194; Type: QD 000 P40 CA; Serial: 1194
- Measurement SW: DASY4, V4.1 Build 47; Postprocessing SW: SEMCAD, V1.6 Build 115

Cheek/Touch Position/Area Scan (13x8x1): Measurement grid: dx=10mm, dy=10mm
Reference Value = 9.78 V/m
Power Drift = -0.06 dB
Maximum value of SAR = 0.355 mW/g

Cheek/Touch Position/Zoom Scan (5x5x7)/Cube 0: Measurement grid: dx=8mm, dy=8mm, dz=5mm
Peak SAR (extrapolated) = 0.487 W/kg
SAR(1 g) = 0.333 mW/g; SAR(10 g) = 0.195 mW/g
Reference Value = 9.78 V/m
Power Drift = -0.06 dB
Maximum value of SAR = 0.36 mW/g

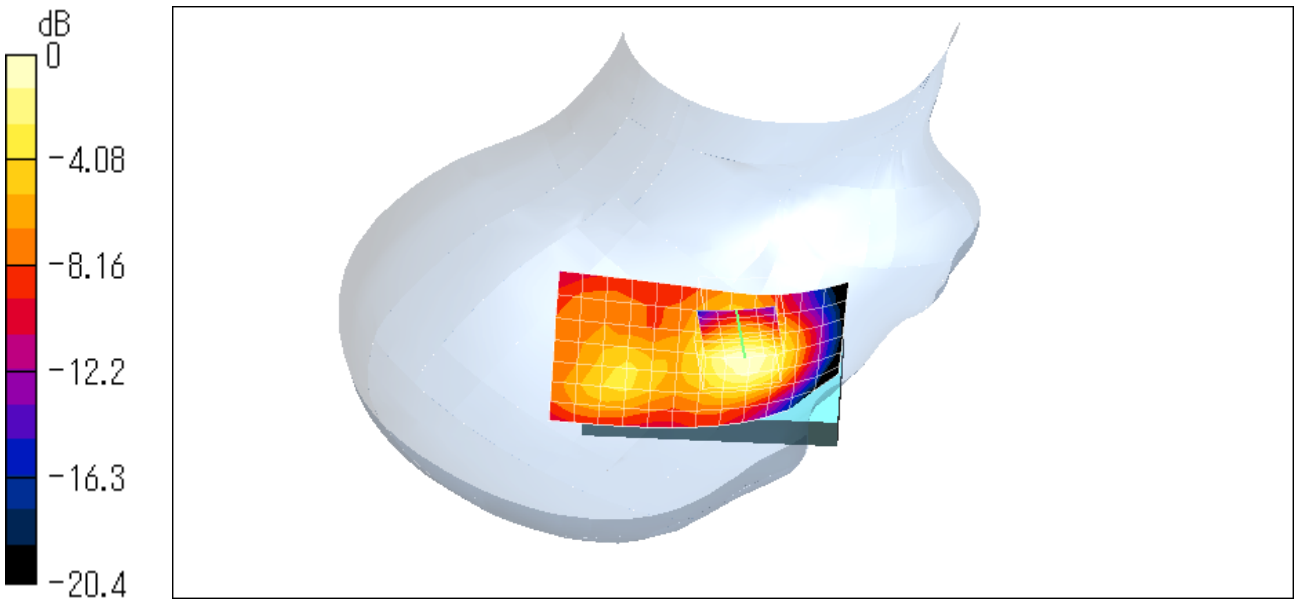

0 dB = 0.36mW/g

Date/Time: 04/07/04 17:45:44

Test Laboratory: JAPAN QUALITY ASSURANCE ORGANIZATION
File Name: Right_low_tilt.da4

Ear/Tilt 0512ch (1850.20MHz)

DUT: GSM-PCS Phone with Bluetooth; Type: GX15; Serial: PP-236
Program: Right Head

Communication System: GSM 1900; Frequency: 1850.2 MHz;Duty Cycle: 1:8.5
Medium: HSL1900 (σ = 1.373 mho/m, ε_r = 38.73, ρ = 1000 kg/m^3)
Phantom section: Right Section
Measurement Standard: DASY4 (High Precision Assessment)

DASY4 Configuration:

- Probe: ET3DV6 - SN1678; ConvF(5.15, 5.15, 5.15); Calibrated: 2004/02/15
- Sensor-Surface: 4mm (Mechanical And Optical Surface Detection)
- Electronics: DAE3 Sn508; Calibrated: 2004/02/06
- Phantom: SAM 1194; Type: QD 000 P40 CA; Serial: 1194
- Measurement SW: DASY4, V4.1 Build 47; Postprocessing SW: SEMCAD, V1.6 Build 115

Ear/Tilt Position/Area Scan (13x8x1): Measurement grid: dx=10mm, dy=10mm
Reference Value = 7.03 V/m
Power Drift = -0.02 dB
Maximum value of SAR = 0.111 mW/g

Ear/Tilt Position/Zoom Scan (5x5x7)/Cube 0: Measurement grid: dx=8mm, dy=8mm, dz=5mm
Peak SAR (extrapolated) = 0.167 W/kg
SAR(1 g) = 0.0998 mW/g; SAR(10 g) = 0.0559 mW/g
Reference Value = 7.03 V/m
Power Drift = -0.02 dB
Maximum value of SAR = 0.109 mW/g

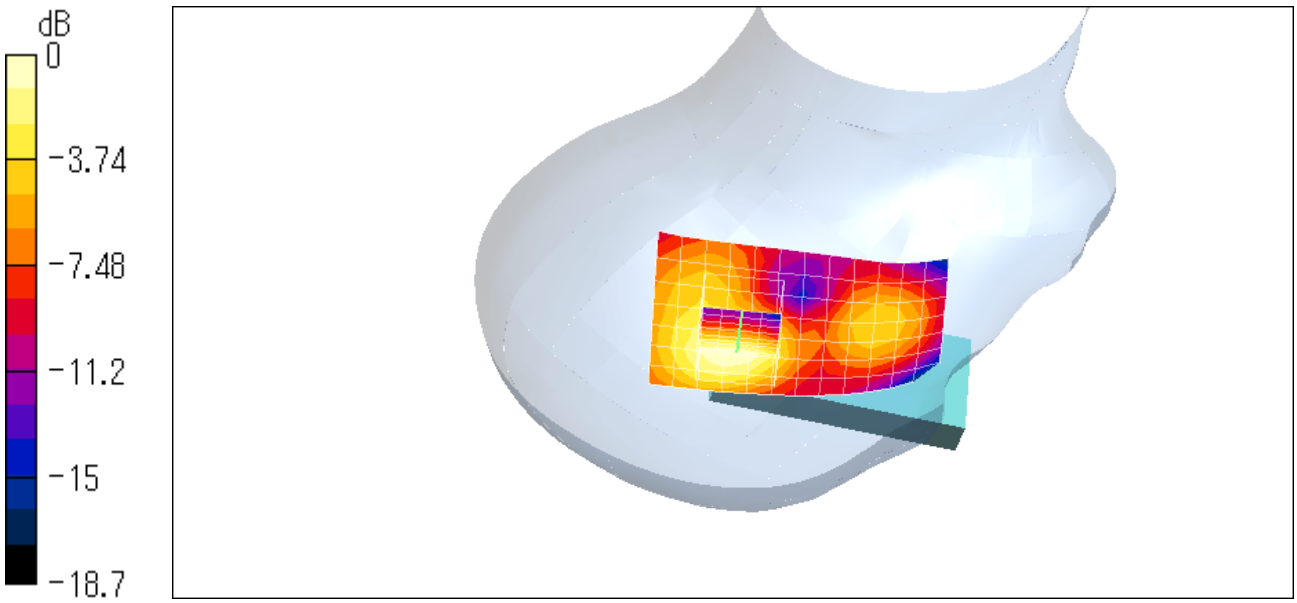

0 dB = 0.109mW/g

Date/Time: 04/07/04 17:21:04

Test Laboratory: JAPAN QUALITY ASSURANCE ORGANIZATION
File Name: Right_middle_tilt.da4

Ear/Tilt 0661ch (1880.00MHz)

DUT: GSM-PCS Phone with Bluetooth; Type: GX15; Serial: PP-236
Program: Right Head

Communication System: GSM 1900; Frequency: 1880 MHz;Duty Cycle: 1:8.5
Medium: HSL1900 (σ = 1.373 mho/m, ε_r = 38.73, ρ = 1000 kg/m^3)
Phantom section: Right Section
Measurement Standard: DASY4 (High Precision Assessment)

DASY4 Configuration:

- Probe: ET3DV6 - SN1678; ConvF(5.15, 5.15, 5.15); Calibrated: 2004/02/15
- Sensor-Surface: 4mm (Mechanical And Optical Surface Detection)
- Electronics: DAE3 Sn508; Calibrated: 2004/02/06
- Phantom: SAM 1194; Type: QD 000 P40 CA; Serial: 1194
- Measurement SW: DASY4, V4.1 Build 47; Postprocessing SW: SEMCAD, V1.6 Build 115

Ear/Tilt Position/Area Scan (13x8x1): Measurement grid: dx=10mm, dy=10mm
Reference Value = 7.36 V/m
Power Drift = 0.005 dB
Maximum value of SAR = 0.115 mW/g

Ear/Tilt Position/Zoom Scan (5x5x7)/Cube 0: Measurement grid: dx=8mm, dy=8mm, dz=5mm
Peak SAR (extrapolated) = 0.178 W/kg
SAR(1 g) = 0.105 mW/g; SAR(10 g) = 0.0586 mW/g
Reference Value = 7.36 V/m
Power Drift = 0.005 dB
Maximum value of SAR = 0.114 mW/g

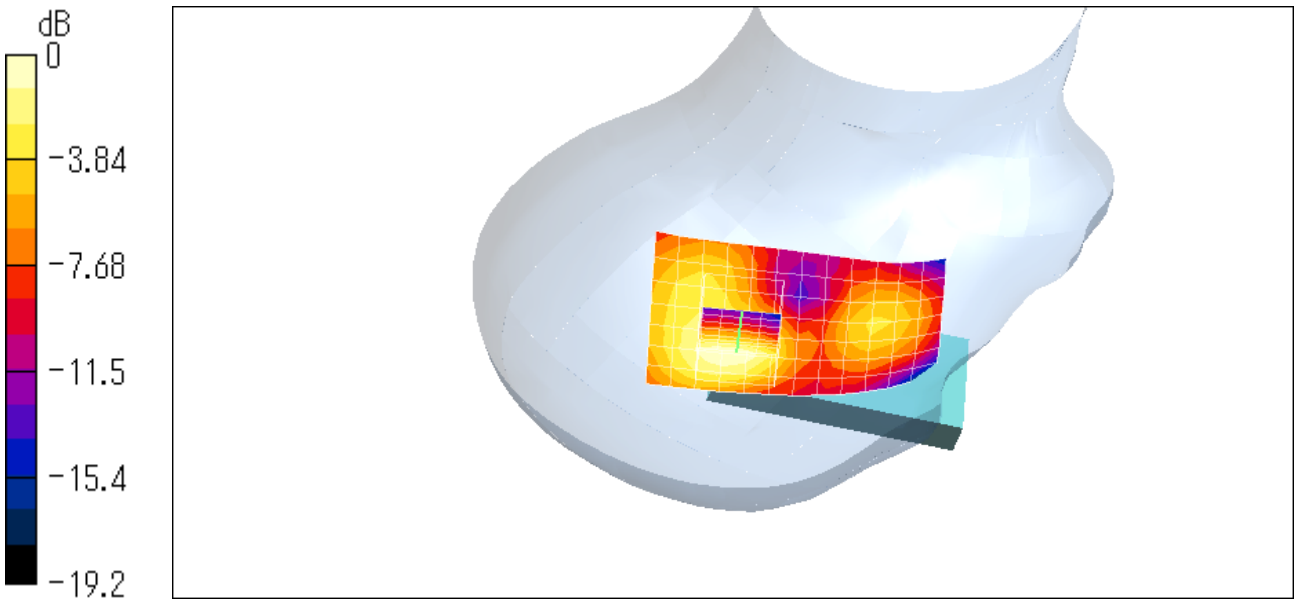

0 dB = 0.114mW/g

Date/Time: 04/07/04 16:59:00

Test Laboratory: JAPAN QUALITY ASSURANCE ORGANIZATION
File Name: Right_high_tilt.da4

Ear/Tilt 0810ch (1909.80MHz)

DUT: GSM-PCS Phone with Bluetooth; Type: GX15; Serial: PP-236
Program: Right Head

Communication System: GSM 1900; Frequency: 1909.8 MHz;Duty Cycle: 1:8.5
Medium: HSL1900 (σ = 1.373 mho/m, ε_r = 38.73, ρ = 1000 kg/m^3)
Phantom section: Right Section
Measurement Standard: DASY4 (High Precision Assessment)

DASY4 Configuration:

- Probe: ET3DV6 - SN1678; ConvF(5.15, 5.15, 5.15); Calibrated: 2004/02/15
- Sensor-Surface: 4mm (Mechanical And Optical Surface Detection)
- Electronics: DAE3 Sn508; Calibrated: 2004/02/06
- Phantom: SAM 1194; Type: QD 000 P40 CA; Serial: 1194
- Measurement SW: DASY4, V4.1 Build 47; Postprocessing SW: SEMCAD, V1.6 Build 115

Ear/Tilt Position/Area Scan (13x8x1): Measurement grid: dx=10mm, dy=10mm
Reference Value = 8.71 V/m
Power Drift = -0.05 dB
Maximum value of SAR = 0.134 mW/g

Ear/Tilt Position/Zoom Scan (5x5x7)/Cube 0: Measurement grid: dx=8mm, dy=8mm, dz=5mm
Peak SAR (extrapolated) = 0.218 W/kg
SAR(1 g) = 0.125 mW/g; SAR(10 g) = 0.0708 mW/g
Reference Value = 8.71 V/m
Power Drift = -0.05 dB
Maximum value of SAR = 0.137 mW/g

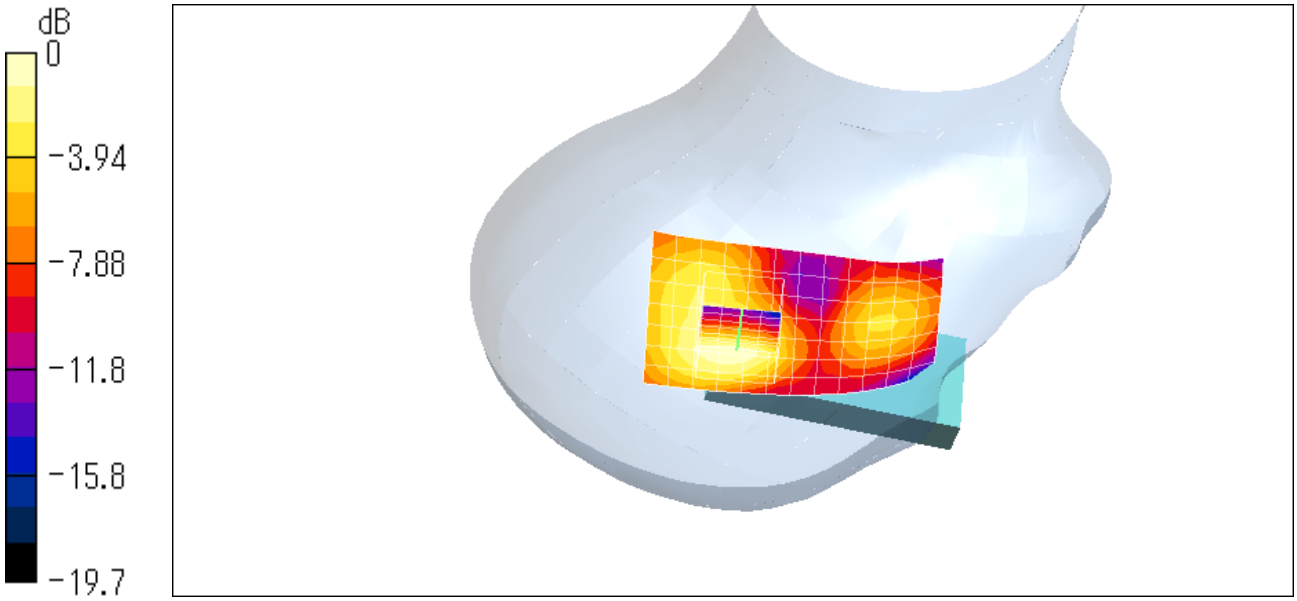

0 dB = 0.137mW/g

Date/Time: 04/08/04 12:51:12

Test Laboratory: JAPAN QUALITY ASSURANCE ORGANIZATION
File Name: Flat_low.da4

Body-worn 0512ch (1850.20MHz)

DUT: GSM-PCS Phone with Bluetooth; Type: GX15; Serial: PP-236
Program: Flat

Communication System: GSM 1900; Frequency: 1850.2 MHz;Duty Cycle: 1:8.5
Medium: M1900 (σ = 1.556 mho/m, ε_r = 52.65, ρ = 1000 kg/m^3)
Phantom section: Flat Section
Measurement Standard: DASY4 (High Precision Assessment)

DASY4 Configuration:

- Probe: ET3DV6 - SN1678; ConvF(4.65, 4.65, 4.65); Calibrated: 2004/02/15
- Sensor-Surface: 4mm (Mechanical And Optical Surface Detection)
- Electronics: DAE3 Sn508; Calibrated: 2004/02/06
- Phantom: SAM 1194; Type: QD 000 P40 CA; Serial: 1194
- Measurement SW: DASY4, V4.1 Build 47; Postprocessing SW: SEMCAD, V1.6 Build 115

Body-worn/Area Scan (8x13x1): Measurement grid: dx=10mm, dy=10mm
Reference Value = 8.23 V/m
Power Drift = 0.02 dB
Maximum value of SAR = 0.243 mW/g

Body-worn/Zoom Scan (5x5x7)/Cube 0: Measurement grid: dx=8mm, dy=8mm, dz=5mm
Peak SAR (extrapolated) = 0.338 W/kg
SAR(1 g) = 0.236 mW/g; SAR(10 g) = 0.155 mW/g
Reference Value = 8.23 V/m
Power Drift = 0.02 dB
Maximum value of SAR = 0.251 mW/g

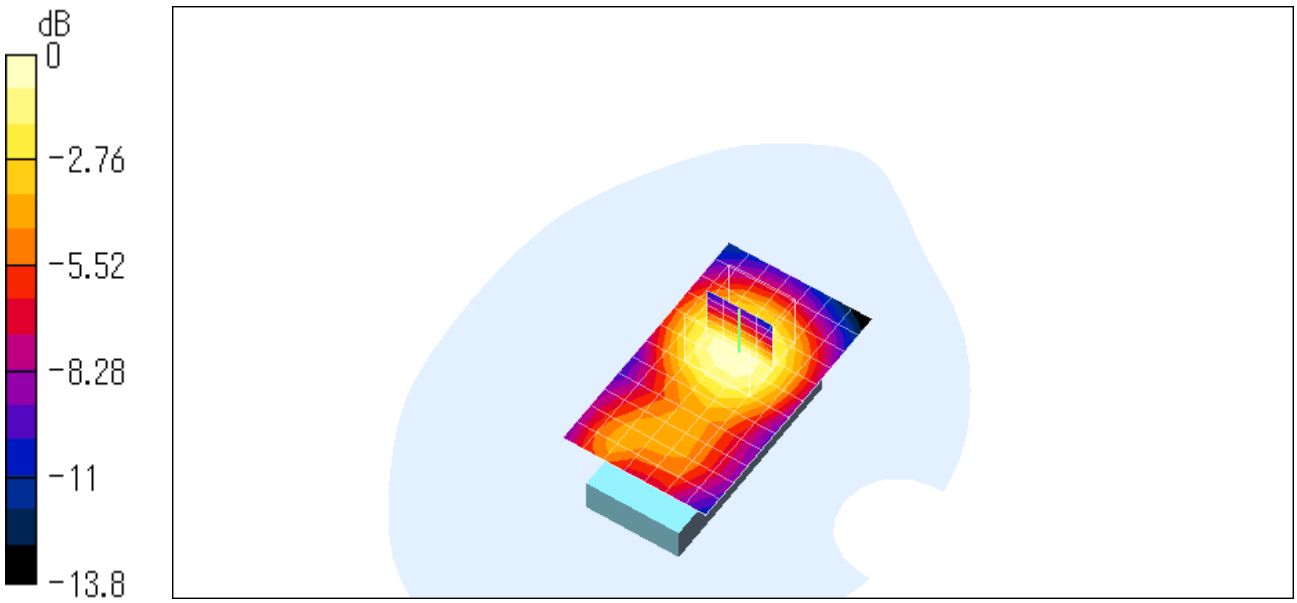

0 dB = 0.251mW/g

Date/Time: 04/08/04 12:29:28

Test Laboratory: JAPAN QUALITY ASSURANCE ORGANIZATION
File Name: Flat_middle.da4

Body-worn 0661ch (1880.00MHz)

DUT: GSM-PCS Phone with Bluetooth; Type: GX15; Serial: PP-236
Program: Flat

Communication System: GSM 1900; Frequency: 1880 MHz;Duty Cycle: 1:8.5
Medium: M1900 (σ = 1.556 mho/m, ε_r = 52.65, ρ = 1000 kg/m^3)
Phantom section: Flat Section
Measurement Standard: DASY4 (High Precision Assessment)

DASY4 Configuration:

- Probe: ET3DV6 - SN1678; ConvF(4.65, 4.65, 4.65); Calibrated: 2004/02/15
- Sensor-Surface: 4mm (Mechanical And Optical Surface Detection)
- Electronics: DAE3 Sn508; Calibrated: 2004/02/06
- Phantom: SAM 1194; Type: QD 000 P40 CA; Serial: 1194
- Measurement SW: DASY4, V4.1 Build 47; Postprocessing SW: SEMCAD, V1.6 Build 115

Body-worn/Area Scan (8x13x1): Measurement grid: dx=10mm, dy=10mm
Reference Value = 8.47 V/m
Power Drift = 0.006 dB
Maximum value of SAR = 0.253 mW/g

Body-worn/Zoom Scan (5x5x7)/Cube 0: Measurement grid: dx=8mm, dy=8mm, dz=5mm
Peak SAR (extrapolated) = 0.357 W/kg
SAR(1 g) = 0.246 mW/g; SAR(10 g) = 0.159 mW/g
Reference Value = 8.47 V/m
Power Drift = 0.006 dB
Maximum value of SAR = 0.263 mW/g

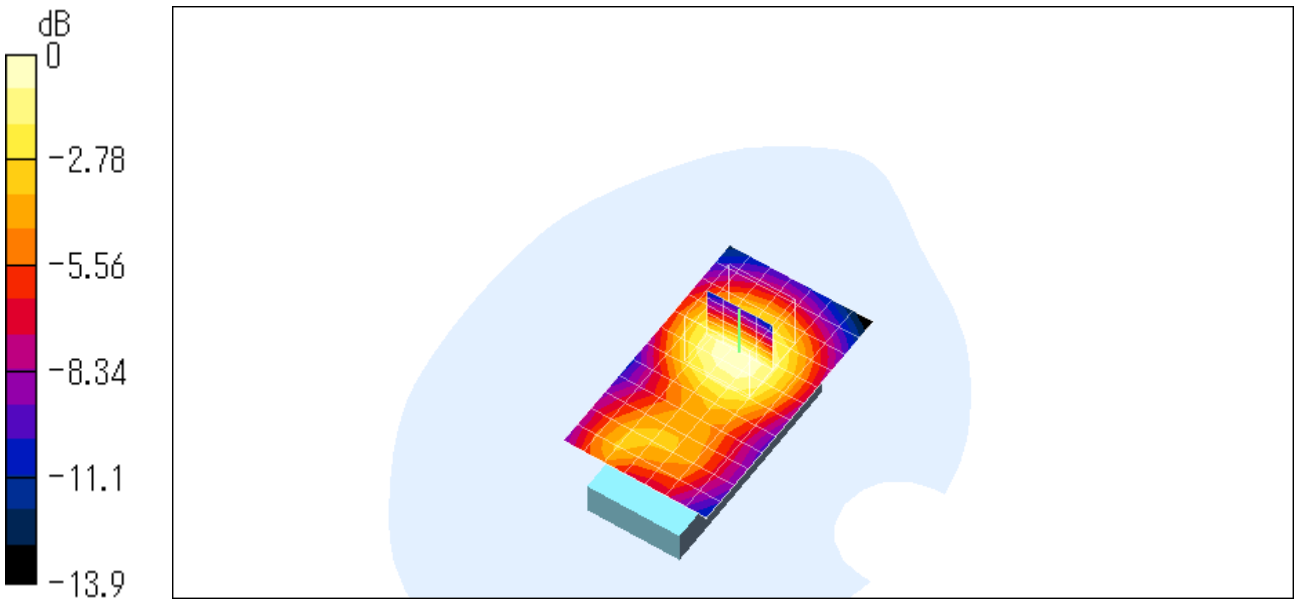

0 dB = 0.263mW/g

Date/Time: 04/08/04 12:08:56

Test Laboratory: JAPAN QUALITY ASSURANCE ORGANIZATION
File Name: Flat_high.da4

Body-worn 0810ch (1909.80MHz)

DUT: GSM-PCS Phone with Bluetooth; Type: GX15; Serial: PP-236
Program: Flat

Communication System: GSM 1900; Frequency: 1909.8 MHz;Duty Cycle: 1:8.5
Medium: M1900 (σ = 1.556 mho/m, ε_r = 52.65, ρ = 1000 kg/m^3)
Phantom section: Flat Section
Measurement Standard: DASY4 (High Precision Assessment)

DASY4 Configuration:

- Probe: ET3DV6 - SN1678; ConvF(4.65, 4.65, 4.65); Calibrated: 2004/02/15
- Sensor-Surface: 4mm (Mechanical And Optical Surface Detection)
- Electronics: DAE3 Sn508; Calibrated: 2004/02/06
- Phantom: SAM 1194; Type: QD 000 P40 CA; Serial: 1194
- Measurement SW: DASY4, V4.1 Build 47; Postprocessing SW: SEMCAD, V1.6 Build 115

Body-worn/Area Scan (8x13x1): Measurement grid: dx=10mm, dy=10mm
Reference Value = 9.31 V/m
Power Drift = 0.004 dB
Maximum value of SAR = 0.292 mW/g

Body-worn/Zoom Scan (5x5x7)/Cube 0: Measurement grid: dx=8mm, dy=8mm, dz=5mm
Peak SAR (extrapolated) = 0.418 W/kg
SAR(1 g) = 0.286 mW/g; SAR(10 g) = 0.183 mW/g
Reference Value = 9.31 V/m
Power Drift = 0.004 dB
Maximum value of SAR = 0.305 mW/g

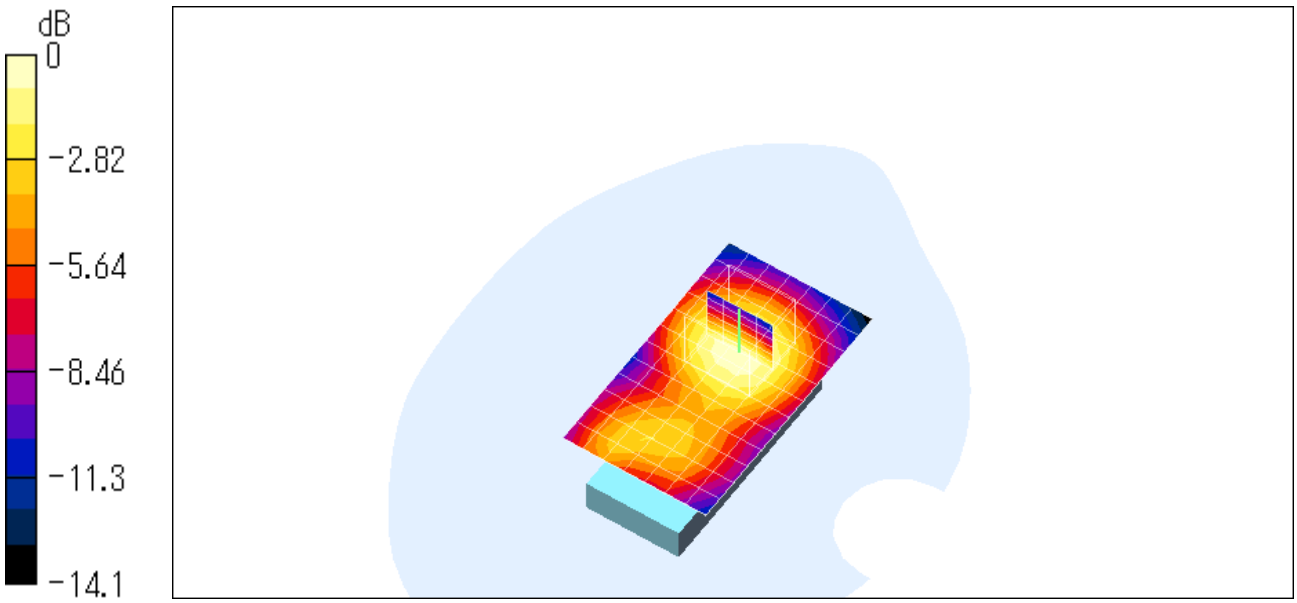

0 dB = 0.305mW/g

Date/Time: 04/08/04 13:27:36

Test Laboratory: JAPAN QUALITY ASSURANCE ORGANIZATION
File Name: Flat_high_BTLow.da4

Body-worn 0810ch (1909.80MHz) with Bluetooth 2402MHz

DUT: GSM-PCS Phone with Bluetooth; Type: GX15; Serial: PP-236
Program: Flat

Communication System: GSM 1900; Frequency: 1909.8 MHz;Duty Cycle: 1:8.5
Medium: M1900 (σ = 1.556 mho/m, ε_r = 52.65, ρ = 1000 kg/m^3)
Phantom section: Flat Section
Measurement Standard: DASY4 (High Precision Assessment)

DASY4 Configuration:

- Probe: ET3DV6 - SN1678; ConvF(4.65, 4.65, 4.65); Calibrated: 2004/02/15
- Sensor-Surface: 4mm (Mechanical And Optical Surface Detection)
- Electronics: DAE3 Sn508; Calibrated: 2004/02/06
- Phantom: SAM 1194; Type: QD 000 P40 CA; Serial: 1194
- Measurement SW: DASY4, V4.1 Build 47; Postprocessing SW: SEMCAD, V1.6 Build 115

Body-worn/Area Scan (8x13x1): Measurement grid: dx=10mm, dy=10mm
Reference Value = 9.55 V/m
Power Drift = 0.04 dB
Maximum value of SAR = 0.286 mW/g

Body-worn/Zoom Scan (5x5x7)/Cube 0: Measurement grid: dx=8mm, dy=8mm, dz=5mm
Peak SAR (extrapolated) = 0.411 W/kg
SAR(1 g) = 0.279 mW/g; SAR(10 g) = 0.179 mW/g
Reference Value = 9.55 V/m
Power Drift = 0.04 dB
Maximum value of SAR = 0.297 mW/g

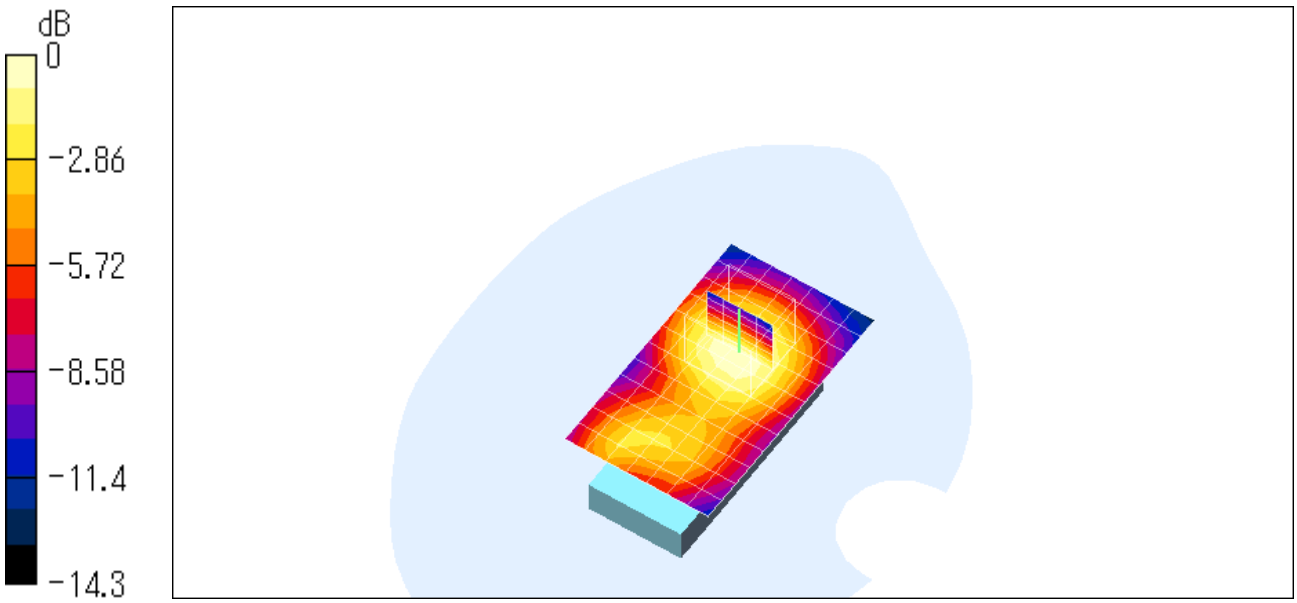

0 dB = 0.297mW/g

Date/Time: 04/08/04 13:52:46

Test Laboratory: JAPAN QUALITY ASSURANCE ORGANIZATION
File Name: Flat_high_BTMid.da4

Body-worn 0810ch (1909.80MHz) with Bluetooth 2441MHz

DUT: GSM-PCS Phone with Bluetooth; Type: GX15; Serial: PP-236
Program: Flat

Communication System: GSM 1900; Frequency: 1909.8 MHz;Duty Cycle: 1:8.5
Medium: M1900 (σ = 1.556 mho/m, ε_r = 52.65, ρ = 1000 kg/m^3)
Phantom section: Flat Section
Measurement Standard: DASY4 (High Precision Assessment)

DASY4 Configuration:

- Probe: ET3DV6 - SN1678; ConvF(4.65, 4.65, 4.65); Calibrated: 2004/02/15
- Sensor-Surface: 4mm (Mechanical And Optical Surface Detection)
- Electronics: DAE3 Sn508; Calibrated: 2004/02/06
- Phantom: SAM 1194; Type: QD 000 P40 CA; Serial: 1194
- Measurement SW: DASY4, V4.1 Build 47; Postprocessing SW: SEMCAD, V1.6 Build 115

Body-worn/Area Scan (8x13x1): Measurement grid: dx=10mm, dy=10mm
Reference Value = 9.34 V/m
Power Drift = -0.01 dB
Maximum value of SAR = 0.291 mW/g

Body-worn/Zoom Scan (5x5x7)/Cube 0: Measurement grid: dx=8mm, dy=8mm, dz=5mm
Peak SAR (extrapolated) = 0.418 W/kg
SAR(1 g) = 0.284 mW/g; SAR(10 g) = 0.182 mW/g
Reference Value = 9.34 V/m
Power Drift = -0.01 dB
Maximum value of SAR = 0.304 mW/g

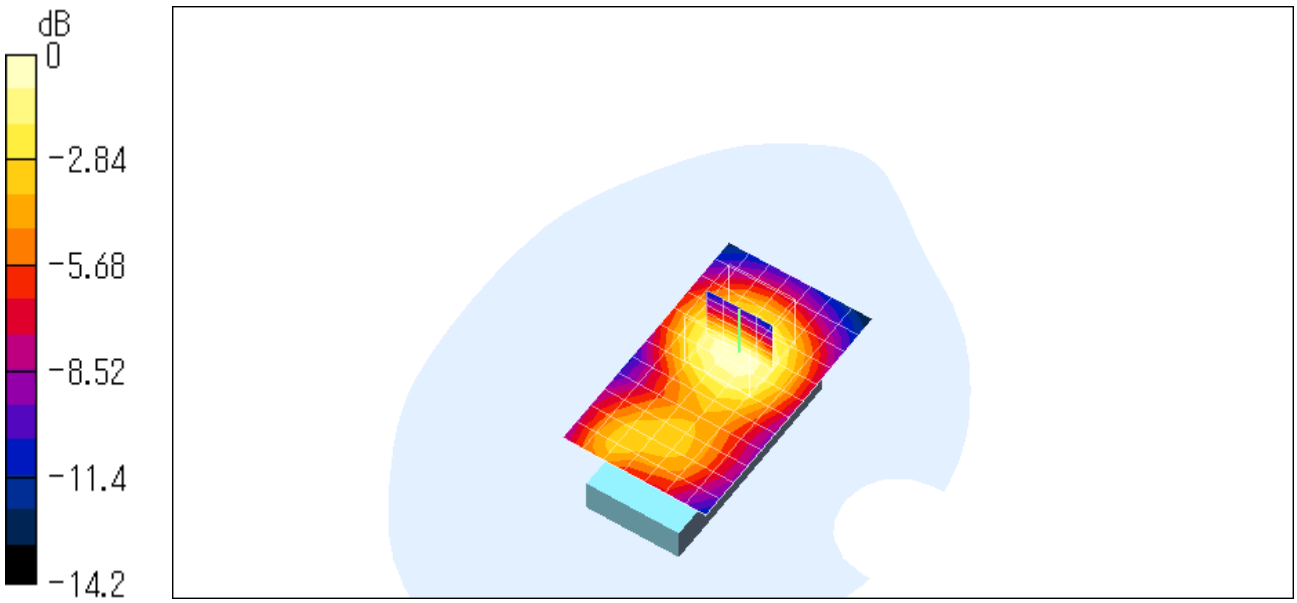

0 dB = 0.304mW/g

Date/Time: 04/08/04 14:18:22

Test Laboratory: JAPAN QUALITY ASSURANCE ORGANIZATION
File Name: Flat_high_BTHigh.da4

Body-worn 0810ch (1909.80MHz) with Bluetooth 2480MHz

DUT: GSM-PCS Phone with Bluetooth; Type: GX15; Serial: PP-236
Program: Flat

Communication System: GSM 1900; Frequency: 1909.8 MHz;Duty Cycle: 1:8.5
Medium: M1900 (σ = 1.556 mho/m, ε_r = 52.65, ρ = 1000 kg/m^3)
Phantom section: Flat Section
Measurement Standard: DASY4 (High Precision Assessment)

DASY4 Configuration:

- Probe: ET3DV6 - SN1678; ConvF(4.65, 4.65, 4.65); Calibrated: 2004/02/15
- Sensor-Surface: 4mm (Mechanical And Optical Surface Detection)
- Electronics: DAE3 Sn508; Calibrated: 2004/02/06
- Phantom: SAM 1194; Type: QD 000 P40 CA; Serial: 1194
- Measurement SW: DASY4, V4.1 Build 47; Postprocessing SW: SEMCAD, V1.6 Build 115

Body-worn/Area Scan (8x13x1): Measurement grid: dx=10mm, dy=10mm
Reference Value = 9.53 V/m
Power Drift = -0.08 dB
Maximum value of SAR = 0.289 mW/g

Body-worn/Zoom Scan (5x5x7)/Cube 0: Measurement grid: dx=8mm, dy=8mm, dz=5mm
Peak SAR (extrapolated) = 0.411 W/kg
SAR(1 g) = 0.282 mW/g; SAR(10 g) = 0.181 mW/g
Reference Value = 9.53 V/m
Power Drift = -0.08 dB
Maximum value of SAR = 0.301 mW/g

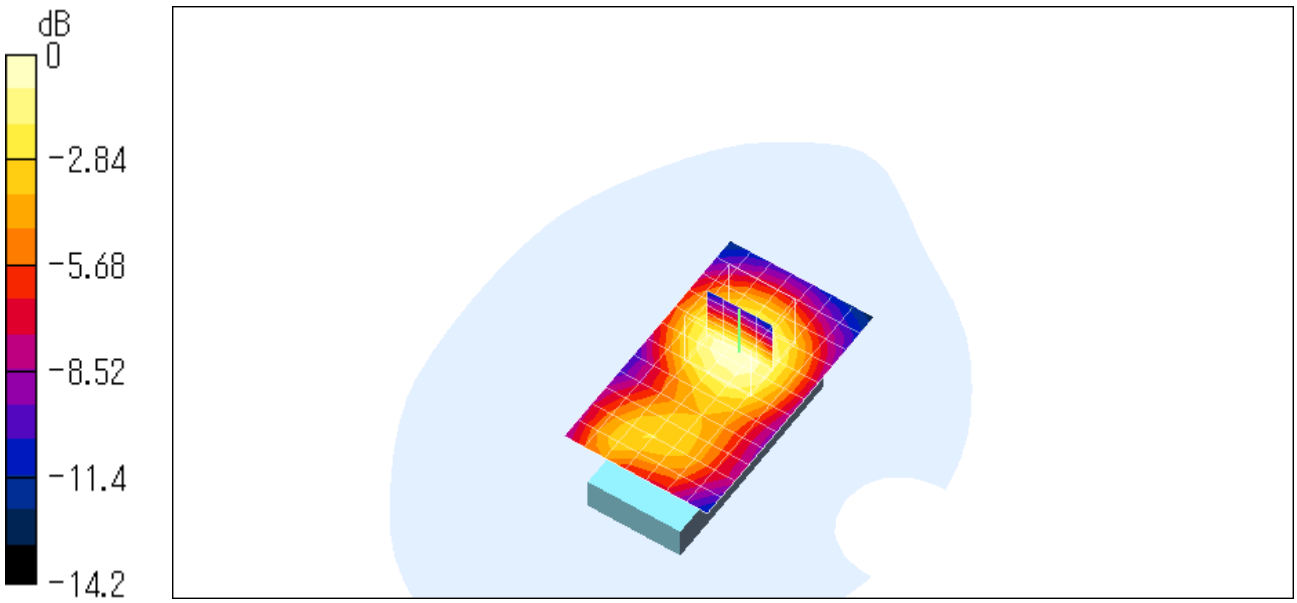

0 dB = 0.301mW/g

Date/Time: 04/08/04 15:37:46

Test Laboratory: JAPAN QUALITY ASSURANCE ORGANIZATION
File Name: Flat_low_GPRS.da4

Body-worn (GPRS mode) 0512ch (1850.20MHz)

DUT: GSM-PCS Phone with Bluetooth; Type: GX15; Serial: PP-236
Program: Flat

Communication System: GSM 1900; Frequency: 1850.2 MHz;Duty Cycle: 1:4.1
Medium: M1900 (σ = 1.556 mho/m, ε_r = 52.65, ρ = 1000 kg/m^3)
Phantom section: Flat Section
Measurement Standard: DASY4 (High Precision Assessment)

DASY4 Configuration:

- Probe: ET3DV6 - SN1678; ConvF(4.65, 4.65, 4.65); Calibrated: 2004/02/15
- Sensor-Surface: 4mm (Mechanical And Optical Surface Detection)
- Electronics: DAE3 Sn508; Calibrated: 2004/02/06
- Phantom: SAM 1194; Type: QD 000 P40 CA; Serial: 1194
- Measurement SW: DASY4, V4.1 Build 47; Postprocessing SW: SEMCAD, V1.6 Build 115

Body-worn (GPRS mode)/Area Scan (8x13x1): Measurement grid: dx=10mm, dy=10mm
Reference Value = 11.9 V/m
Power Drift = -0.03 dB
Maximum value of SAR = 0.432 mW/g

Body-worn (GPRS mode)/Zoom Scan (5x5x7)/Cube 0: Measurement grid: dx=8mm, dy=8mm, dz=5mm
Peak SAR (extrapolated) = 0.603 W/kg
SAR(1 g) = 0.421 mW/g; SAR(10 g) = 0.276 mW/g
Reference Value = 11.9 V/m
Power Drift = -0.03 dB
Maximum value of SAR = 0.447 mW/g

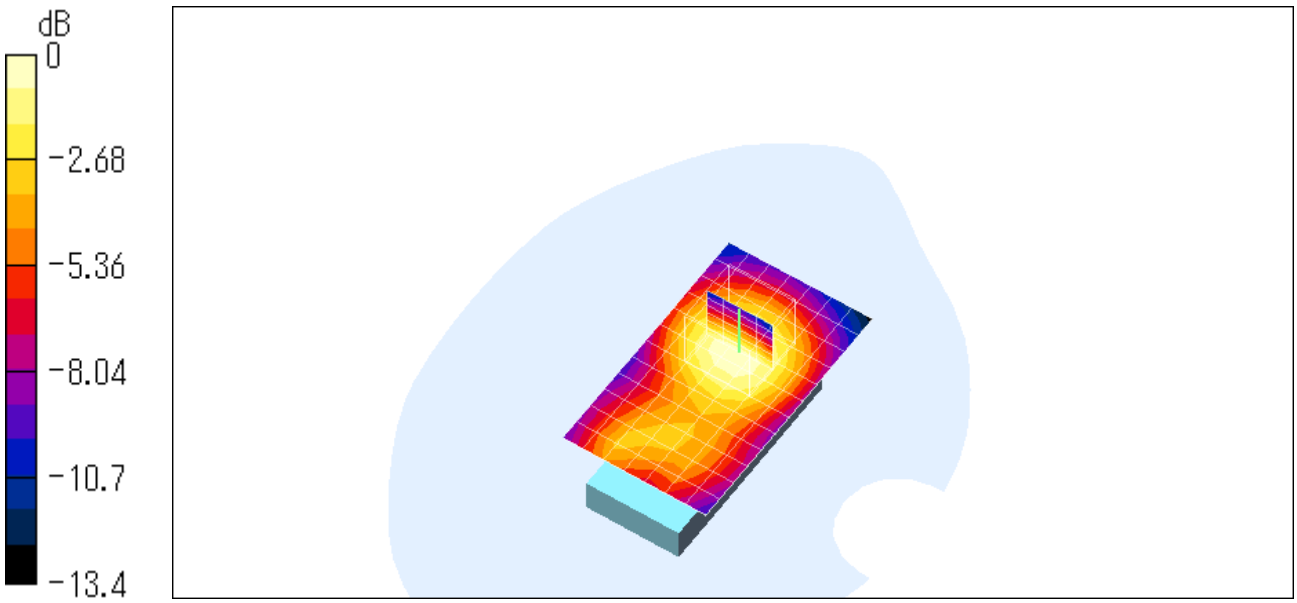

0 dB = 0.447mW/g

Date/Time: 04/08/04 14:47:42

Test Laboratory: JAPAN QUALITY ASSURANCE ORGANIZATION
File Name: Flat_middle_GPRS.da4

Body-worn (GPRS mode) 0661ch (1880.00MHz)

DUT: GSM-PCS Phone with Bluetooth; Type: GX15; Serial: PP-236
Program: Flat

Communication System: GSM 1900; Frequency: 1880 MHz;Duty Cycle: 1:4.1
Medium: M1900 (σ = 1.556 mho/m, ε_r = 52.65, ρ = 1000 kg/m^3)
Phantom section: Flat Section
Measurement Standard: DASY4 (High Precision Assessment)

DASY4 Configuration:

- Probe: ET3DV6 - SN1678; ConvF(4.65, 4.65, 4.65); Calibrated: 2004/02/15
- Sensor-Surface: 4mm (Mechanical And Optical Surface Detection)
- Electronics: DAE3 Sn508; Calibrated: 2004/02/06
- Phantom: SAM 1194; Type: QD 000 P40 CA; Serial: 1194
- Measurement SW: DASY4, V4.1 Build 47; Postprocessing SW: SEMCAD, V1.6 Build 115

Body-worn (GPRS mode)/Area Scan (8x13x1): Measurement grid: dx=10mm, dy=10mm
Reference Value = 12.1 V/m
Power Drift = -0.07 dB
Maximum value of SAR = 0.463 mW/g

Body-worn (GPRS mode)/Zoom Scan (5x5x7)/Cube 0: Measurement grid: dx=8mm, dy=8mm, dz=5mm
Peak SAR (extrapolated) = 0.647 W/kg
SAR(1 g) = 0.449 mW/g; SAR(10 g) = 0.293 mW/g
Reference Value = 12.1 V/m
Power Drift = -0.07 dB
Maximum value of SAR = 0.472 mW/g

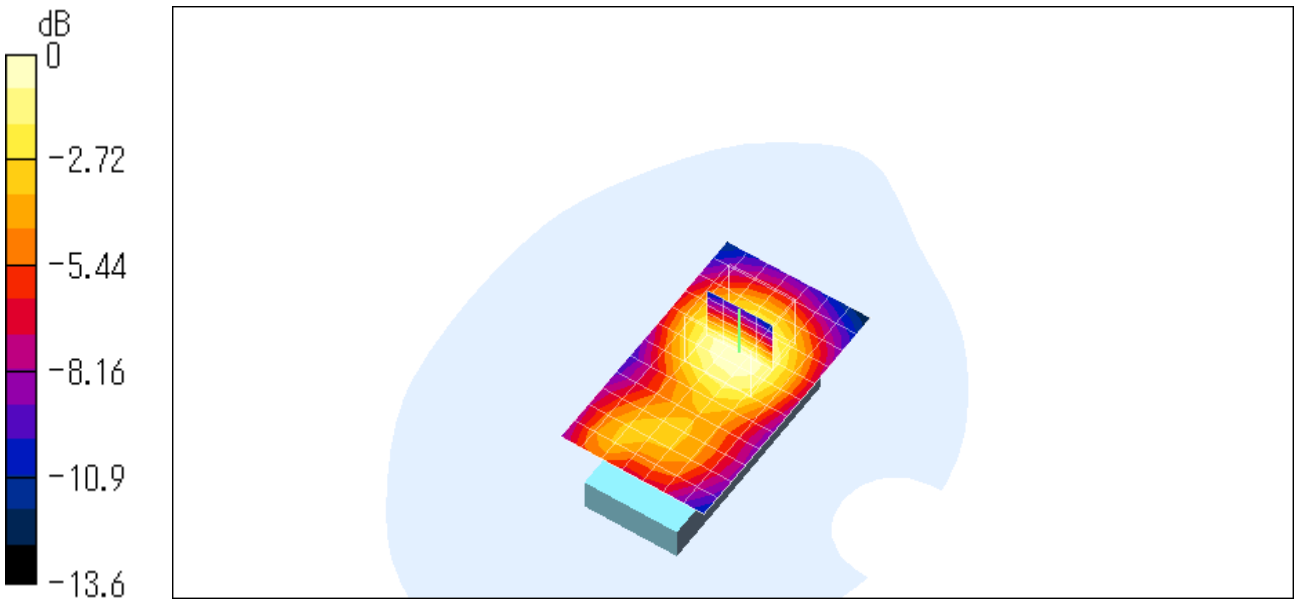

0 dB = 0.472mW/g

Test Laboratory: JAPAN QUALITY ASSURANCE ORGANIZATION
File Name: Flat_high_GPRS.da4

Body-worn (GPRS mode) 0810ch (1909.80MHz)

DUT: GSM-PCS Phone with Bluetooth; Type: GX15; Serial: PP-236
Program: Flat

Communication System: GSM 1900; Frequency: 1909.8 MHz;Duty Cycle: 1:4.1
Medium: M1900 (σ = 1.556 mho/m, ε_r = 52.65, ρ = 1000 kg/m^3)
Phantom section: Flat Section
Measurement Standard: DASY4 (High Precision Assessment)

DASY4 Configuration:

- Probe: ET3DV6 - SN1678; ConvF(4.65, 4.65, 4.65); Calibrated: 2004/02/15
- Sensor-Surface: 4mm (Mechanical And Optical Surface Detection)
- Electronics: DAE3 Sn508; Calibrated: 2004/02/06
- Phantom: SAM 1194; Type: QD 000 P40 CA; Serial: 1194
- Measurement SW: DASY4, V4.1 Build 47; Postprocessing SW: SEMCAD, V1.6 Build 115

Body-worn (GPRS mode)/Area Scan (8x13x1): Measurement grid: dx=10mm, dy=10mm
Reference Value = 13 V/m
Power Drift = -0.06 dB
Maximum value of SAR = 0.554 mW/g

Body-worn (GPRS mode)/Zoom Scan (5x5x7)/Cube 0: Measurement grid: dx=8mm, dy=8mm, dz=5mm
Peak SAR (extrapolated) = 0.791 W/kg
SAR(1 g) = 0.544 mW/g; SAR(10 g) = 0.35 mW/g
Reference Value = 13 V/m
Power Drift = -0.06 dB
Maximum value of SAR = 0.579 mW/g

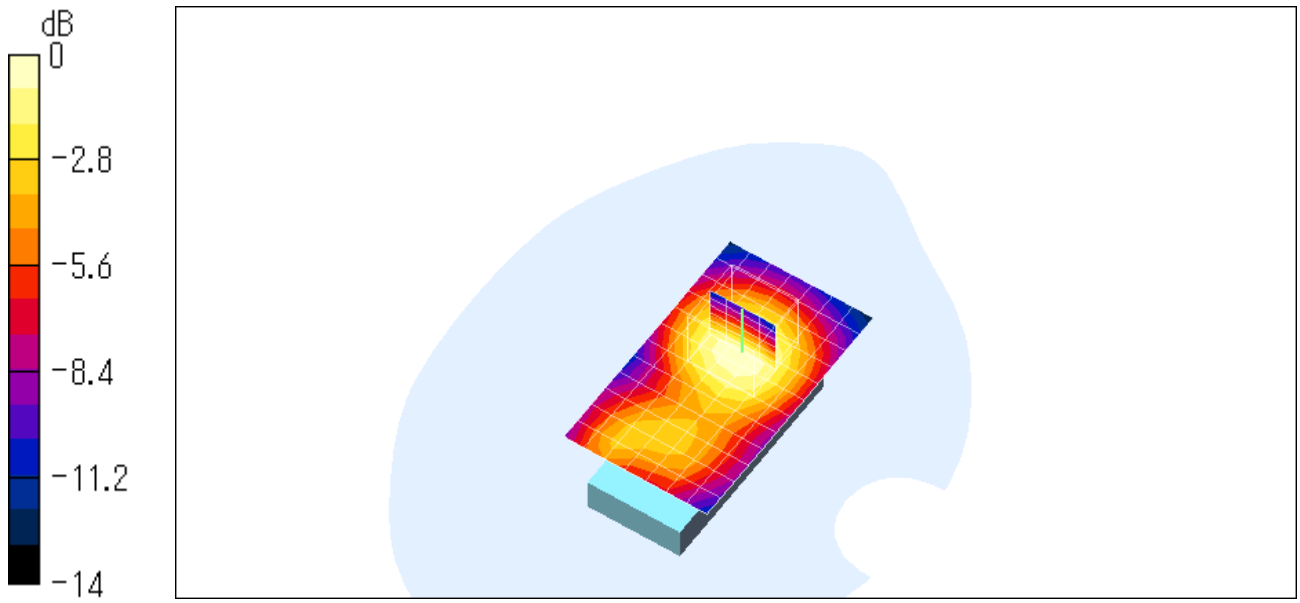

0 dB = 0.579mW/g

Z-axis Scanning Data for Worst Case

Left Head Position
Cheek/Touch 0810ch (1909.80 MHz) with Bluetooth 2402 MHz

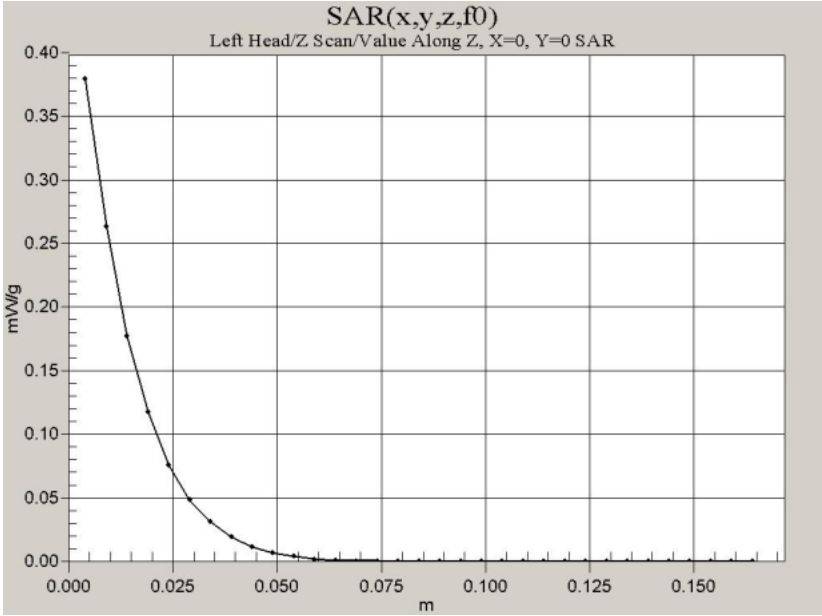
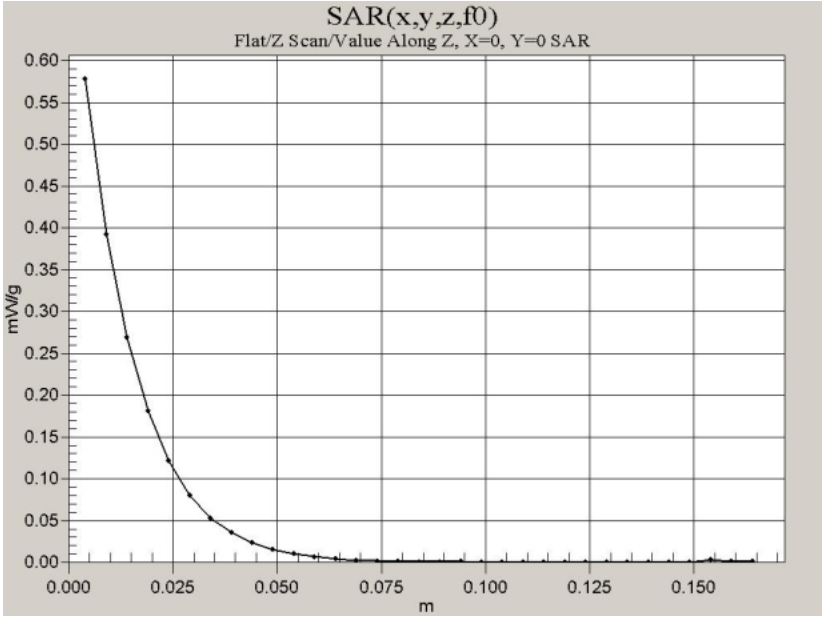
Flat Position
Body-worn (GPRS mode) 0810ch (1909.80 MHz)