Product Service

Choose certainty.
Add value.

Report On

FCC DFS Testing of the Sharp SHL22 Dual-band CDMA (BC0, BC6) & Quad-band GSM (GSM850/GSM900/DCS1800/PCS1900) & Dual-band UMTS (FDDI, FDDV) & Tri-band LTE (B1, B11, B18) multi mode cellular phone with Bluetooth, WLAN, NFC (FeliCa) and GPS
In accordance with FCC CFR 47 Part 15E and FCC 06-96

COMMERCIAL-IN-CONFIDENCE

FCC ID: APYHRO00192

Document 75920802 Report 19 Issue 1 June 2013

TÜV SÜD Product Service, Octagon House, Concorde Way, Segensworth North,
Fareham, Hampshire, United Kingdom, PO15 5RL
Tel: +44 (0) 1489 558100. Website: www.tuv-sud.co.uk

REPORT ON

FCC DFS Testing of the
Sharp SHL22 Dual-band CDMA (BC0, BC6) & Quad-band GSM (GSM850/GSM900/DCS1800/PCS1900) & Dual-band UMTS (FDDI, FDDV) & Tri-band LTE (B1, B11, B18) multi mode cellular phone with Bluetooth, WLAN, NFC (FeliCa) and GPS
In accordance with FCC CFR 47 Part 15E and FCC 06-96

Document 75920802 Report 19 Issue 1

June 2013

PREPARED FOR

Sharp Communication Compliance Ltd
Azure House
Bagshot Road
Bracknell
Berkshire
RG12 7QY

PREPARED BY

Natalie Bennett
Senior Administrator (Technical)

APPROVED BY

Mark Jenkins
Authorised Signatory

DATED 27 June 2013

ENGINEERING STATEMENT

The measurements shown in this report were made in accordance with the procedures described on test pages. All reported testing was carried out on a sample equipment to demonstrate limited compliance with FCC CFR 47 Part 15E and FCC 06-96. The sample tested was found to comply with the requirements defined in the applied rules.

Test Engineer(s);

S Milliken

UKAS TESTING 0141

Product Service

CONTENTS

Section		Page No
1	**REPORT SUMMARY**	**3**
1.1	Introduction	4
1.2	Test Requirements	5
1.3	Brief Summary of Results	6
1.4	Application Form	7
1.5	Product Information	10
1.6	Test Conditions	10
1.7	Deviations from the Standard	10
1.8	Modification Record	10
1.9	DFS Test System	11
2	**TEST DETAILS**	**13**
2.1	Calibration of Test Setup	14
2.2	In-Service Monitoring	24
3	**TEST EQUIPMENT USED**	**31**
3.1	Test Equipment Used	32
3.2	Support Test Equipment	33
3.3	Measurement Uncertainty	34
4	**PHOTOGRAPHS**	**35**
4.1	Test Set-Up Photographs	36
4.2	DFS Test Equipment	36
5	**ACCREDITATION, DISCLAIMERS AND COPYRIGHT**	**37**
5.1	Accreditation, Disclaimers and Copyright	38

Product Service

SECTION 1

REPORT SUMMARY

FCC DFS Testing of the
Sharp SHL22 Dual-band CDMA (BC0, BC6) & Quad-band GSM
(GSM850/GSM900/DCS1800/PCS1900) & Dual-band UMTS (FDDI, FDDV) & Tri-band LTE
(B1, B11, B18) multi mode cellular phone with Bluetooth, WLAN, NFC (FeliCa) and GPS
In accordance with FCC CFR 47 Part 15E and FCC 06-96

1.1 INTRODUCTION

The information contained in this report is intended to show verification of the FCC DFS Testing of the Sharp SHL22 Dual-band CDMA (BC0, BC6) & Quad-band GSM (GSM850/GSM900/DCS1800/PCS1900) & Dual-band UMTS (FDDI, FDDV) & Tri-band LTE (B1, B11, B18) multi mode cellular phone with Bluetooth, WLAN, NFC (FeliCa) and GPS to the requirements of FCC CFR 47 Part 15E and FCC 06-96.

Objective	To perform FCC DFS Testing to determine the Equipment Under Test's (EUT's) compliance with the Test Specification, for the series of tests carried out.
Manufacturer	Sharp Corporation
Model Number(s)	SHL22
Serial Number(s)	IMEI 004401114764489
Hardware Version	PP1
Software Version	A4100
Number of Samples Tested	1
Test Specification/Issue/Date	FCC CFR 47 Part 15E (2012) FCC 06-96 (2006)
Incoming Release Date	Application Form 14 May 2013
Disposal Reference Number Date	Held Pending Disposal Not Applicable Not Applicable
Order Number Date	9676 30 April 2013
Start of Test	20 May 2013
Finish of Test	20 May 2013
Name of Engineer(s)	S Milliken
Related Document(s)	FCC Public Notice DA 02-2138 (2002); UKAS M3003: Edition 2 (2007); ETSI TR 100 028 (2001)

1.2 TEST REQUIREMENTS

Table 1: Applicability of DFS Requirements Prior to Use of a Channel

Requirement	Operational Mode		
	Master	Client Without DFS	Client With DFS
Non-Occupancy Period	Yes	Not required	Yes
DFS Detection Threshold	Yes	Not required	Yes
Channel Availability Check Time	Yes	Not required	Not required
Uniform Spreading	Yes	Not required	Not required
U-NII Detection Bandwidth	Yes	Not required	Yes

Table 2: Applicability of DFS requirements during normal operation

Requirement	Operational Mode		
	Master	Client Without DFS	Client With DFS
DFS Detection Threshold	Yes	Not required	Yes
Channel Closing Transmission Time	Yes	Yes	Yes
Channel Move Time	Yes	Yes	Yes
U-NII Detection Bandwidth	Yes	Not required	Yes

Product Service

1.3 BRIEF SUMMARY OF RESULTS

A brief summary of the tests carried out in accordance with FCC CFR 47 Part 15E and FCC 06-96 is shown below.

Section	Spec Clause	Test Description	Result	Comments/Base Standard
802.11(a)				
2.1	NA	Calibration of Test Setup	Pass	
2.2	15.407 (h)(2)(iii)	In-Service Monitoring	Pass	
802.11(n) DFS - 20 MHz BW				
2.1	NA	Calibration of Test Setup	Pass	
2.2	15.407 (h)(2)(iii)	In-Service Monitoring	Pass	
802.11(n) DFS - 40 MHz BW				
2.1	NA	Calibration of Test Setup	Pass	
2.2	15.407 (h)(2)(iii)	In-Service Monitoring	Pass	

Product Service

1.4 APPLICATION FORM

EQUIPMENT DESCRIPTION	
Model Name/Number	SHL22
Part Number	DA208_A
Hardware Version	PP1
Software Version	A4100-2
FCC ID	APYHRO00192
Technical Description (Please provide a brief description of the intended use of the equipment)	Dual-band CDMA (BC0, BC6) & Quad-band GSM (GSM850/900/DCS1800/PCS1900) & Dual-band UMTS (FDDI, FDDV) & Tri-band LTE (B1,B11, B18) multi mode cellular phone with Bluetooth, WLAN, NFC (FeliCa) and GPS

TYPE OF EQUIPMENT	
☐	Master
☐	Client with Radar Detection
☒	Client without Radar Detection

TRANSMITTER TECHNICAL CHARACTERISTICS	
FREQUENCY CHARACTERISTICS	
☒	5.150 GHz to 5.250 GHz
☒	5.250 GHz to 5.350 GHz
☒	5.470 GHz to 5.725 GHz
☐	5.725 GHz to 5.825 GHz
☐	EUT operates in the frequency band 5600 – 5650 MHz? This shouldn't be checked as not allowed to operate in this band.
☐	Off Channel CAC Implemented Off Channel CAC within 5600 – 5650 MHz band hours, (1 – 24) Off Channel CAC outside 5600 – 5650 MHz band minutes, (6 – 240)
Note: DFS is not required in the ranges 5.15 – 5.25 GHz and 5.725 – 5.825 GHz	

TRANSMITTER RF POWER CHARACTERISTICS	
Maximum rated transmitter output power as stated by manufacturer (if applicable)	
Conducted Power	13.5 dBm
Maximum Antenna Gain	2 dBi
EIRP	15.5 dBm
Minimum rated transmitter output power as stated by manufacturer (if applicable)	
Conducted Power	dBm
Maximum Antenna Gain	dBi
EIRP	dBm
Is TPC supported?	☒ Yes ☐ No
If Yes, provide a description of operation.	
This equipment implements TPC accordance with IEEE802.11a/n and IEEE802.11h	

Product Service

POWER SOURCE			
☐	AC mains supply		State voltage
AC supply frequency		(Hz)	VAC
☒	DC supply		
Nominal voltage	4		

SYSTEM ARCHITECTURE			
☒	Frame Based		
☐	IP Based		
☐	Other	If other please state	
☒	802.11(a)	Receiver Bandwidth:	20MHz
☒	802.11(n) – 20 MHz	Receiver Bandwidth:	20MHz
☒	802.11(n) – 40 MHz	Receiver Bandwidth:	20/40MHz

DECLARATION			
No parameter or information relating to the detected radar waveforms is available or accessible to the end user.			
☒	True	☐	False

MISCELLANEOUS	
Power-on cycle time*	N/A
* Time from switching on the UUT to the point at which Channel Availability Check (CAC) commences	

UNIFORM SPREADING
Describe how the meter provides, on aggregate, uniform channel loading of the spectrum across all channels.
N/A

Product Service

ANTENNA OPTIONS	
Antenna 1	
Antenna Description:	Integral BT / WLAN strip line antenna
Antenna Model:	GCABBA469AFS*
Antenna Maximum Gain:	2dBi
Antenna Frequency Range:	Dual band: 2400MHz -2500MHz, 5100MHz- 5750MHz
Antenna 2	
Antenna Description:	
Antenna Model:	
Antenna Maximum Gain:	
Antenna Frequency Range:	
Antenna 3	
Antenna Description:	
Antenna Model:	
Antenna Maximum Gain:	
Antenna Frequency Range:	
Antenna 4	
Antenna Description:	
Antenna Model:	
Antenna Maximum Gain:	
Antenna Frequency Range:	
Antenna 5	
Antenna Description:	
Antenna Model:	
Antenna Maximum Gain:	
Antenna Frequency Range:	

I hereby declare that I am entitled to sign on behalf of the applicant and that the information supplied is correct and complete.

Signature: : Name: Hachiro Hidaka

Position held: Asst. Manager Date: 14th May, 2013

1.5 PRODUCT INFORMATION

1.5.1 Technical Description

The Equipment Under Test (EUT) was a Sharp SHL22 Dual-band CDMA (BC0, BC6) & Quad-band GSM (GSM850/GSM900/DCS1800/PCS1900) & Dual-band UMTS (FDDI, FDDV) & Tri-band LTE (B1, B11, B18) multi mode cellular phone with Bluetooth, WLAN, NFC (FeliCa) and GPS. A full technical description can be found in the manufacturer's documentation.

The EUT is a client without radar detection device.

1.6 TEST CONDITIONS

For all tests the EUT was set up in accordance with the relevant test standard and to represent typical operating conditions. See individual test clauses.

The EUT was powered from a 4.0 V DC supply.

1.7 DEVIATIONS FROM THE STANDARD

No deviations from the applicable test standard or test plan were made during testing.

1.8 MODIFICATION RECORD

Modification 0 - No modifications were made to the test sample during testing.

1.9 DFS TEST SYSTEM

The DFS system consists of hardware and software. The Hardware uses a PXI chassis with PXI instruments populating the chassis. The instruments used are a Vector Signal Generator, a Digitiser, Frequency References and a Dual Core PC. The measurement and analysis software runs on the PC and controls the instruments within the mainframe via commands on the PXI bus. Various markers are contained within the generated waveforms. The markers are used to trigger the measurement system at the appropriate points. An external trigger is also provided at the SMB output on the Vector Signal Generator which is employed where a Spectrum Analyser is used in place of the Aeroflex Digitiser. These are described within the test procedure for the applicable test.

The Aeroflex DFS software generates the pulses in accordance with FCC 06-96.

Short Pulse Radar Test Waveform (Types 1-4)

The short pulse radar simulation is a conventional amplitude pulse with varying pulse widths, pulse rate intervals (PRI) and number of pulses. General characteristics for these types and number of repetitions required by the standard are as follows:

Radar Type	Pulse Width (µsec)	PRI (µsec)	Number of Pulses
1	1	1428	18
2	1-5	150-230	23-29
3	6-10	200-500	16-18
4	11-20	200-500	12-16

FCC 06-96 - Table 5 – Short Pulse Radar Test Waveforms

Long Pulse Radar Test Waveform (Type 5)

The long pulse radar simulation is a 12 second concatenated series of chirps, chosen randomly. The general characteristics for type 5 and number of repetitions required by the standard are as follows:

Radar Type	Pulse Width (µsec)	Chirp Width (MHz)	PRI (µsec)	Number of Pulses per *Burst*	Number of *Bursts*
5	50-100	5-20	1000-2000	1-3	8-20

FCC 06-96 - Table 6 – Long Pulse Radar Test Waveform

A Type 5 Radar sequence is constructed in the following way:

1) The user provides the required level based on the calibration and the test frequency.
2) The Burst_Count, (a number between 8 and 20 inclusive), is chosen representing the number of "bursts" (or waveform segments). Type 5 waveform length is 12 seconds, thus each "burst" length will be BL = 12/ Burst_Count.
3) Pulse_Count, a number between 1 and 3 inclusive is chosen for each burst segment (1 through Burst_Count) representing the number of chirped pulses for each burst segment.
4) For each burst segment, the following chirp parameters are randomly chosen (all chirped pulses within a given burst segment are the same, whether 1, 2, or 3 chirped pulses are chosen):
a) Frequency width (5 MHz to 20 MHz, a linear and symmetrical ramp)
b) Pulse period (50 µs to 100 µs)
c) Pulse Rate Interval (1 ms to 2 ms, in 1 µs increments)
d) The start of the first pulse in a given burst segment is randomly chosen (in 1 µs increments) between 1 µs and [(the total burst length - (total of all pulse periods within a burst) + (the total space between pulses within a burst)]. Or stated otherwise, 1 µs to [(BL - (Pulse_Count * pulse period) + (Pulse_Count - 1)* randomly chosen PRI Interval)].

Frequency Hopping Test Waveform (Type 6)

The frequency hopping radar simulation emits 9 1 µs wide amplitude pulses with a 333 µs PRI spacing on a randomly chosen frequency, hops to another randomly chosen frequency, emits another 9 pulses and then continues this sequence for 100 different frequencies chosen using a pseudo random sequence. General characteristics for type 6 and number of repetitions required by the standard are as follows:

Radar Type	Pulse Width (µsec)	PRI (µsec)	Pulses per Hop	Hopping Rate (kHz)	Hopping Sequence Length (msec)
6	1	333	9	0.333	300

FCC 06-96 - Table 7 – Frequency Hopping Radar Test Waveform

The frequency hopping Radar is generated in the following way:

a) The user inputs the required level based on the calibration and a frequency within the EUT detection bandwidth.
b) A sequence of 100 numbers, (n = 1 to 100), are randomly chosen from between 1 to 475 and then removed from the sequence producing 100 unique random numbers.
c) Frequency assignments are 5250 MHz + n.
d) If the list generated from steps (b) and (c) does not include at least one frequency which is between 5250 to 5350 MHz or 5470 to 5725 MHz, the list is regenerated.
e) Secondly, in order to verify that at least one frequency in the list is at the EUT frequency plus or minus ½ the EUT detection bandwidth (i.e. at least one of the frequencies in the list must conflict with the EUT's operation such that the EUT will attempt to relocate when the sequence is played), the frequency supplied by the user is inserted into the list, replacing one selection.

Using the supplied Aeroflex software, the pulses are automatically generated and the required numbers of trials are created for each Radar Type – except in the case of Radar Type 1 which has no changeable attributes. The pulses are saved as Arbitrary Waveform files which are then selected by the user for use in the scenario being tested.

Product Service

SECTION 2

TEST DETAILS

FCC DFS Testing of the
Sharp SHL22 Dual-band CDMA (800MHz_BC0, 1900MHz_BC6) & Quad-band GSM (GSM850/ GSM900/DCS1800/PCS1900) & Dual-band UMTS (2100MHz_FDDI, 850MHz_FDDV)&Tri-band LTE (1.9G_B1, 1.5G_B11, 800M_B18) multi mode cellular phone with Bluetooth, WLAN, NFC (FeliCa) and GPS enabled
In accordance with FCC CFR 47 Part 15E and FCC 06-96

2.1 CALIBRATION OF TEST SETUP

2.1.1 Specification Reference

FCC CFR 47 Part 15E and FCC 06-96, Clause NA

2.1.2 Equipment Under Test and Modification State

SHL22 S/N: IMEI 004401114764489 - Modification State 0

2.1.3 Date of Test

20 May 2013

2.1.4 Environmental Conditions

Ambient Temperature	22.4°C
Relative Humidity	43.3%

Product Service

2.1.5 Test Results

802.11(a)

In this test equipment configuration, Radar signals are injected at the Master. The configuration ensures that the Radar pulses are received only by the Master device and not the Client. To calibrate the Radar pulses, the UUT was replaced by a Spectrum Analyser. The required Radar Waveform, (Type 1), was loaded into the Arbitrary Waveform Generator. The Spectrum Analyser was set to zero Span and the RBW and VBW set to 3MHz. The sweep time was set to display the entire burst and triggered on the Radar Burst. The output level of the Radar Signal Generator was adjusted to give the correct level as defined in the table below with the 1dB correction accounted for. Trace data showing the used Radar Pulses was recorded.

DFS Detection Thresholds for Master Devices and Client Devices With Radar Detection

Maximum Transmit Power	Value (See Notes 1 and 2)
≥ 200 milliwatt	-64 dBm
< 200 milliwatt	-62 dBm
Note 1: This is the level at the input of the receiver assuming a 0 dBi receive antenna. Note 2: Throughout these test procedures an additional 1 dB has been added to the amplitude of the test transmission waveforms to account for variations in measurement equipment. This will ensure that the test signal is at or above the detection threshold level to trigger a DFS response.	

Test Equipment Setup

Setup for Client with injection at the Master

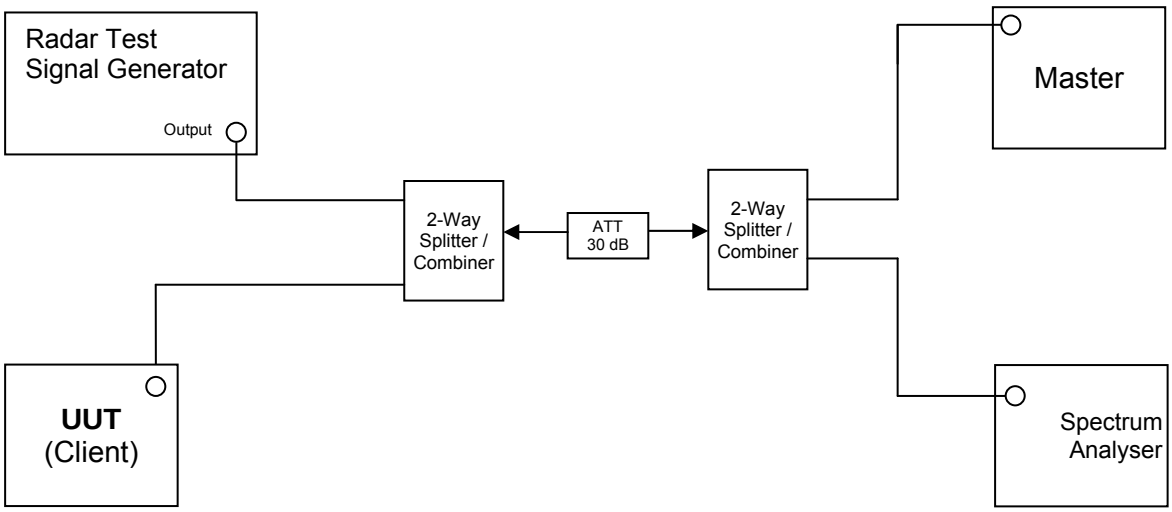

Product Service

Radar Pulse Type 1

Short Radar Pulse Characteristics

Radar Type	Pulse Width (µs)	PRI (µs)	Number Of Pulses
1	1	1428	18

Client without Radar Detection

Radar Type 1 Plot

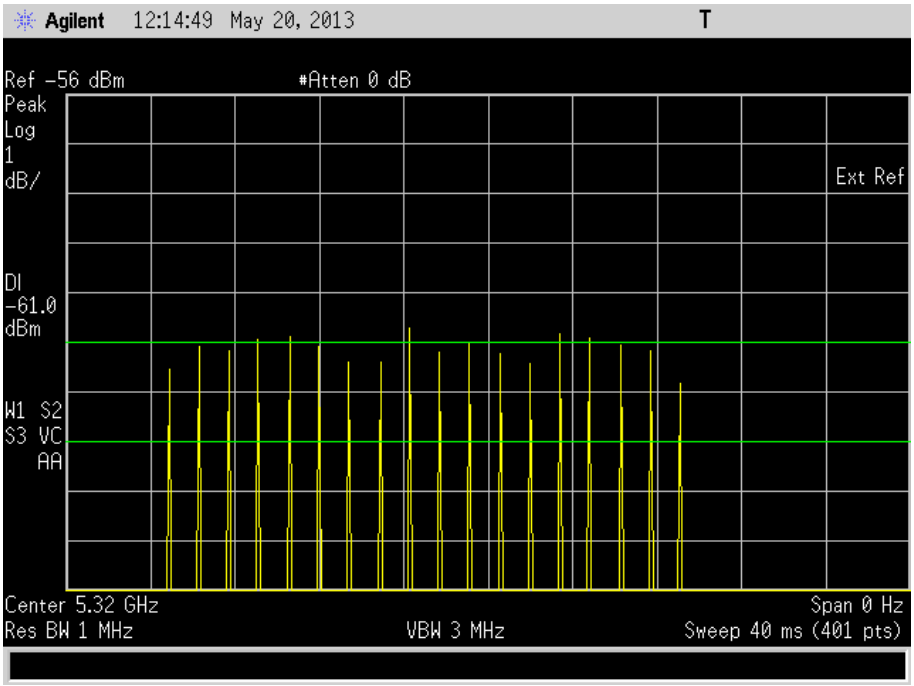

Product Service

Channel Loading Plot

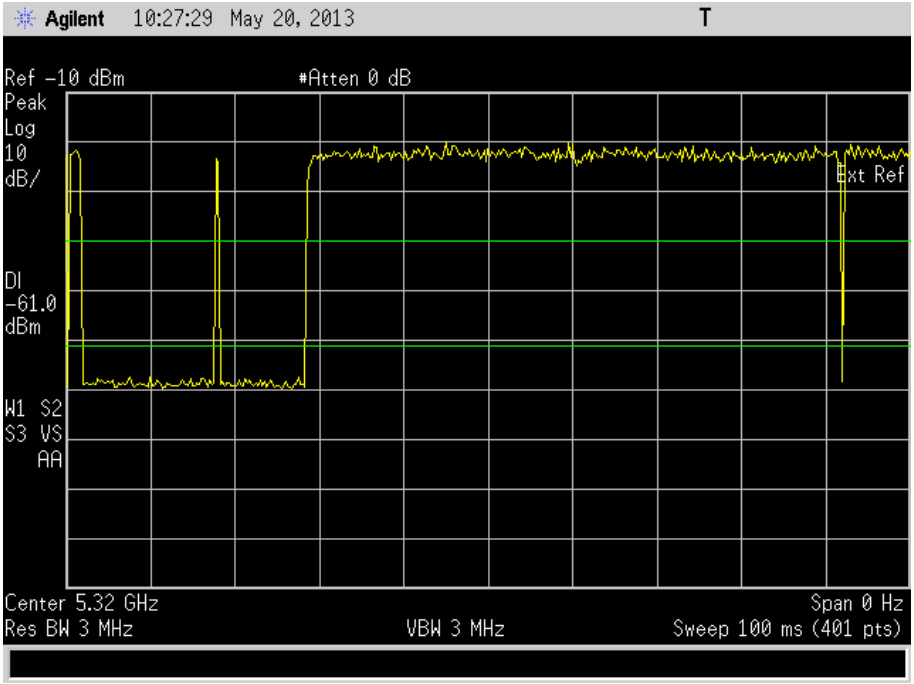

Product Service

802.11(n) DFS - 20 MHz BW

In this test equipment configuration, Radar signals are injected at the Master. The configuration ensures that the Radar pulses are received only by the Master device and not the Client. To calibrate the Radar pulses, the UUT was replaced by a Spectrum Analyser. The required Radar Waveform, (Type 1), was loaded into the Arbitrary Waveform Generator. The Spectrum Analyser was set to zero Span and the RBW and VBW set to 3MHz. The sweep time was set to display the entire burst and triggered on the Radar Burst. The output level of the Radar Signal Generator was adjusted to give the correct level as defined in the table below with the 1dB correction accounted for. Trace data showing the used Radar Pulses was recorded.

DFS Detection Thresholds for Master Devices and Client Devices With Radar Detection

Maximum Transmit Power	Value (See Notes 1 and 2)
≥ 200 milliwatt	-64 dBm
< 200 milliwatt	-62 dBm
Note 1: This is the level at the input of the receiver assuming a 0 dBi receive antenna. Note 2: Throughout these test procedures an additional 1 dB has been added to the amplitude of the test transmission waveforms to account for variations in measurement equipment. This will ensure that the test signal is at or above the detection threshold level to trigger a DFS response.	

Test Equipment Setup

Setup for Client with injection at the Master

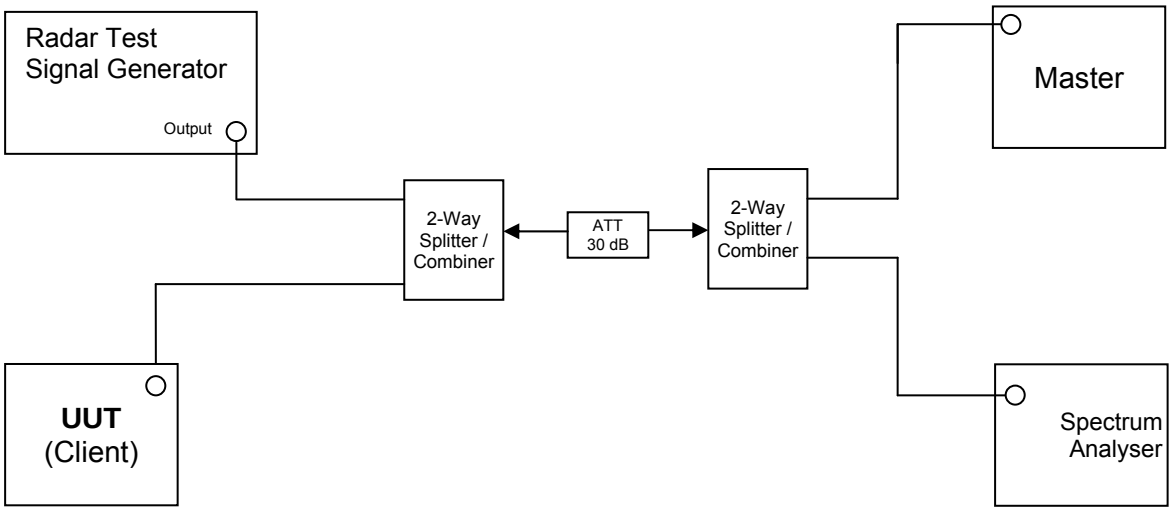

Product Service

Radar Pulse Type 1

Short Radar Pulse Characteristics

Radar Type	Pulse Width (µs)	PRI (µs)	Number Of Pulses
1	1	1428	18

Client without Radar Detection

Radar Type 1 Plot

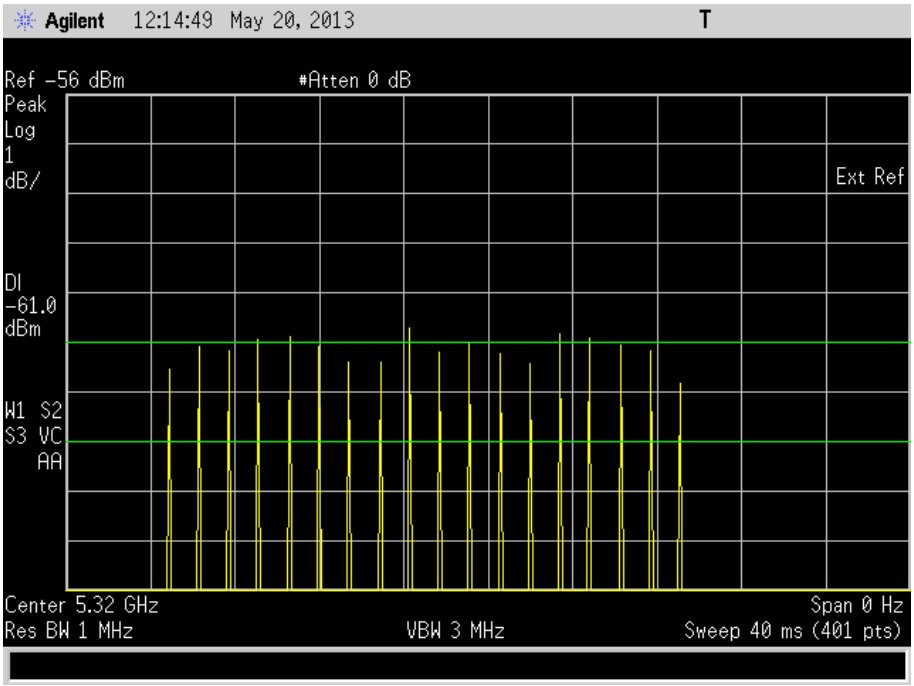

Product Service

Channel Loading Plot

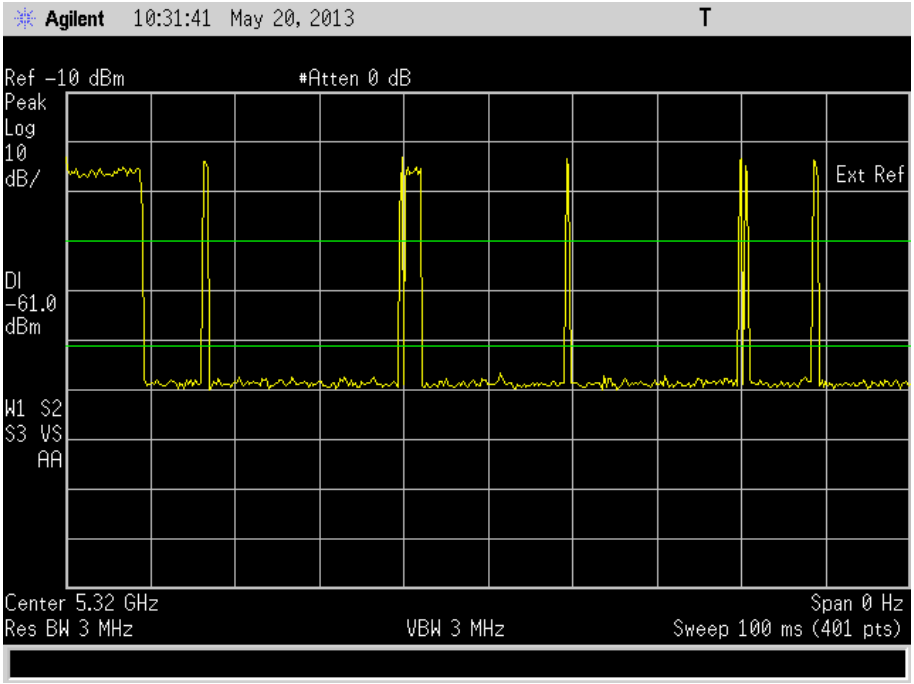

Product Service

802.11(n) DFS - 40 MHz BW

In this test equipment configuration, Radar signals are injected at the Master. The configuration ensures that the Radar pulses are received only by the Master device and not the Client. To calibrate the Radar pulses, the UUT was replaced by a Spectrum Analyser. The required Radar Waveform, (Type 1), was loaded into the Arbitrary Waveform Generator. The Spectrum Analyser was set to zero Span and the RBW and VBW set to 3MHz. The sweep time was set to display the entire burst and triggered on the Radar Burst. The output level of the Radar Signal Generator was adjusted to give the correct level as defined in the table below with the 1dB correction accounted for. Trace data showing the used Radar Pulses was recorded.

DFS Detection Thresholds for Master Devices and Client Devices With Radar Detection

Maximum Transmit Power	Value (See Notes 1 and 2)
≥ 200 milliwatt	-64 dBm
< 200 milliwatt	-62 dBm
Note 1: This is the level at the input of the receiver assuming a 0 dBi receive antenna. Note 2: Throughout these test procedures an additional 1 dB has been added to the amplitude of the test transmission waveforms to account for variations in measurement equipment. This will ensure that the test signal is at or above the detection threshold level to trigger a DFS response.	

Test Equipment Setup

Setup for Client with injection at the Master

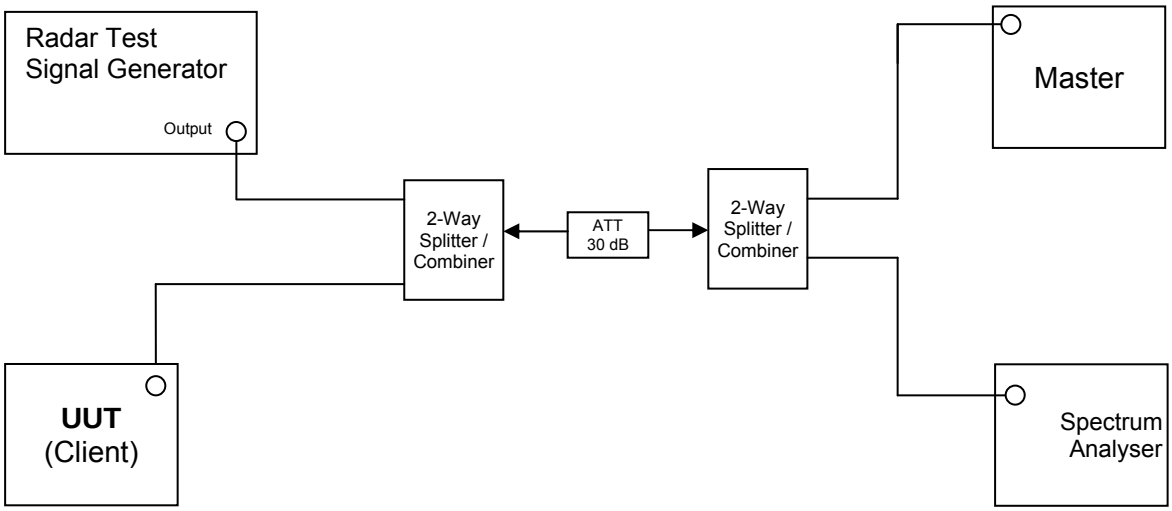

Radar Pulse Type 1

Short Radar Pulse Characteristics

Radar Type	Pulse Width (µs)	PRI (µs)	Number Of Pulses
1	1	1428	18

Client without Radar Detection

Radar Type 1 Plot

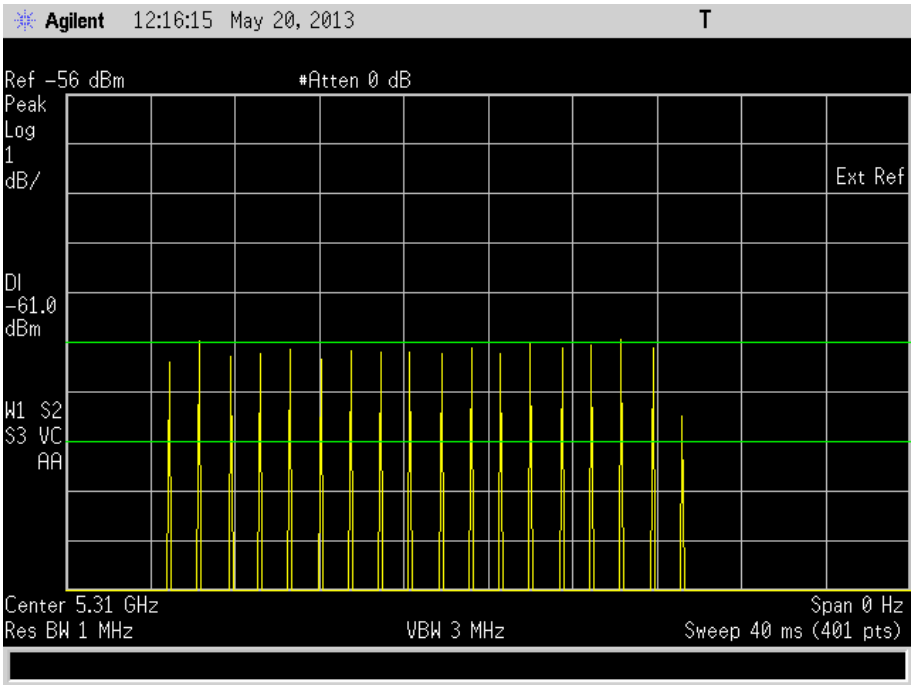

Product Service

Channel Loading Plot

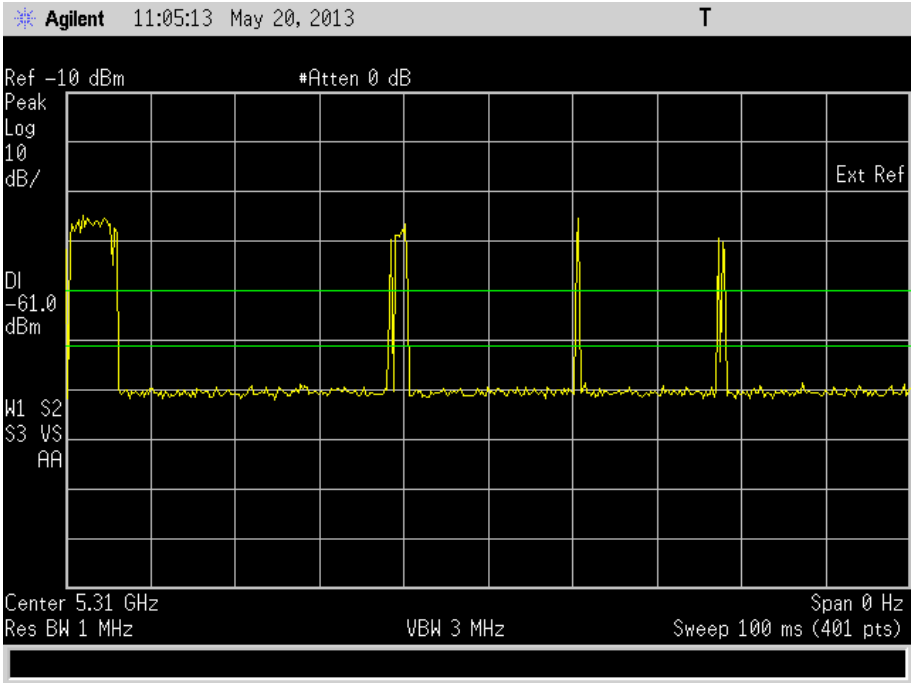

2.2 IN-SERVICE MONITORING

2.2.1 Specification Reference

FCC CFR 47 Part 15E, Clause 15.407 (h)(2)(iii)

2.2.2 Equipment Under Test and Modification State

SHL22 S/N: IMEI 004401114764489 - Modification State 0

2.2.3 Date of Test

20 May 2013

2.2.4 Test Equipment Used

The major items of test equipment used for the above tests are identified in Section 3.1.

2.2.5 Test Procedure

The EUT was associated with the FCC Approved Master device FCC ID:UZ7MB82.
A laptop was connected via an Ethernet cable to the Master device and the FCC defined audio/video file was streamed to the Client device using Windows Media Player.

Radar Pulse Type 1 was then transmitted and the Spectrum monitored. The transmissions from the UUT were observed for a period of 12 seconds after the final injected Radar Pulse. The Channel Move Time and the Channel Closing Time were measured and recorded.

The plot also shows 0.6 seconds prior to the radar pulses being applied to the UUT.

2.2.6 Environmental Conditions

Ambient Temperature	22.4°C
Relative Humidity	43.3%

Product Service

2.2.7 Test Results

802.11(a)

Channel Move Time	1.913 seconds
Channel Closing Time (Aggregate Time During 200ms)	0.329 ms
Channel Closing Time (Aggregate Time During +200ms to 10s)	2.801 ms
Channel Closing Time (Aggregate Time During 10s)	3.13 ms

Overall Power vs Time Display, showing channel closing and move time

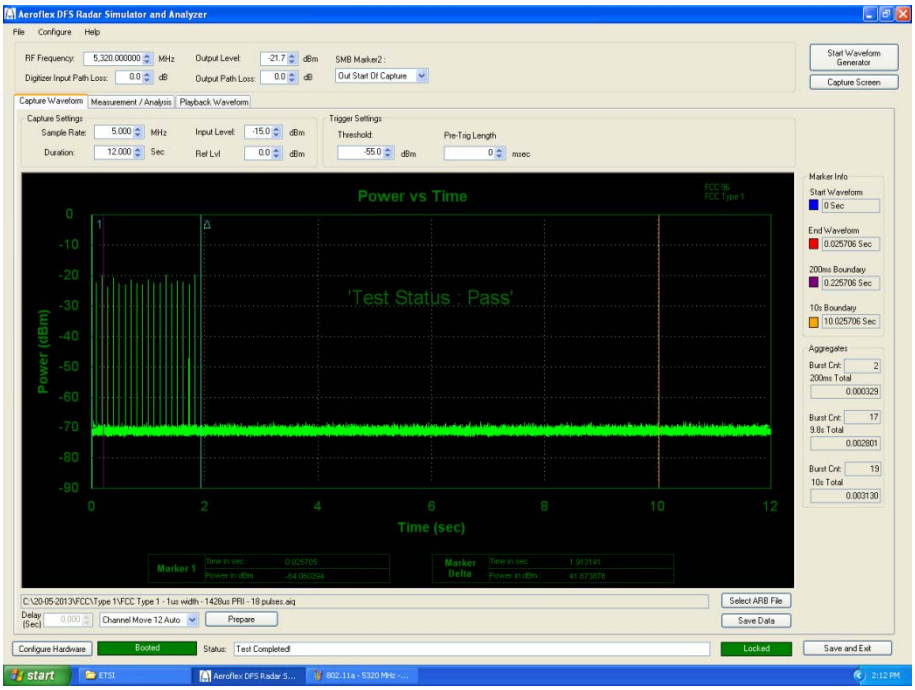

Product Service

Zoom of Radar Burst, Access Point and Client Signalling

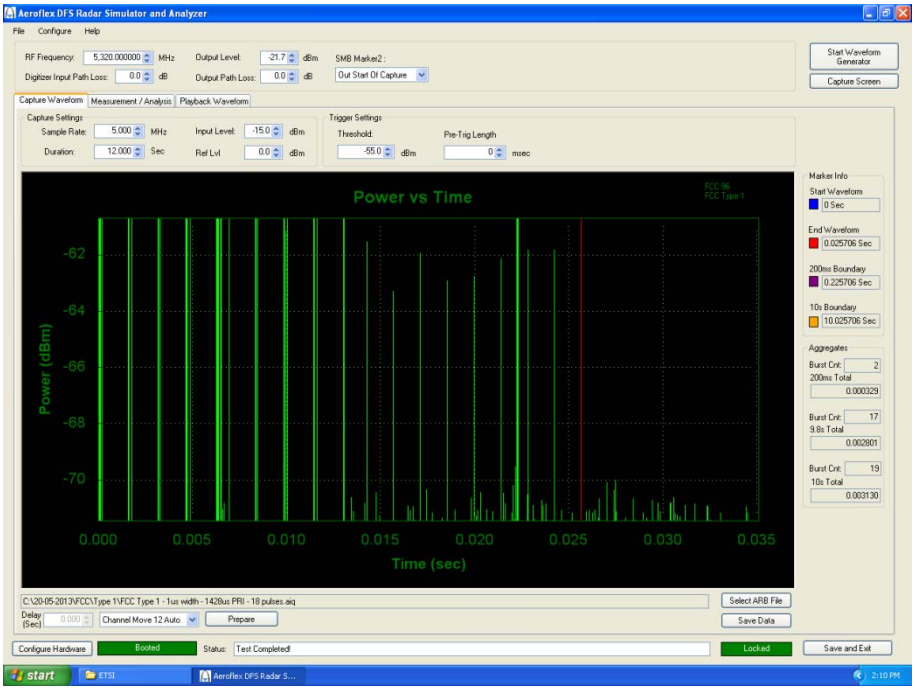

Limit Clause 15.407 (h)(2(iii) and FCC 06-96, Table 4

Channel Move Time	<10s
Channel Closing Time (Aggregate Time During 200ms)	<200ms
Channel Closing Time (Aggregate Time During +200ms to 10s)	<60ms

Product Service

802.11(n) DFS - 20 MHz BW

Channel Move Time	1.952 seconds
Channel Closing Time (Aggregate Time During 200ms)	0.665 ms
Channel Closing Time (Aggregate Time During +200ms to 10s)	5.99 ms
Channel Closing Time (Aggregate Time During 10s)	6.655 ms

Overall Power vs Time Display, showing channel closing and move time

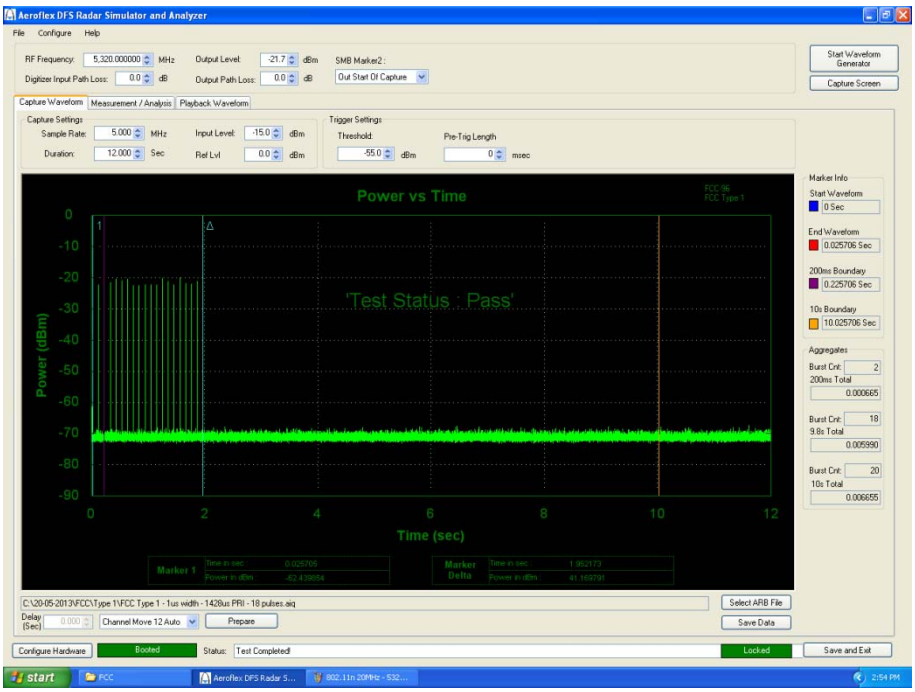

Product Service

Zoom of Radar Burst, Access Point and Client Signalling

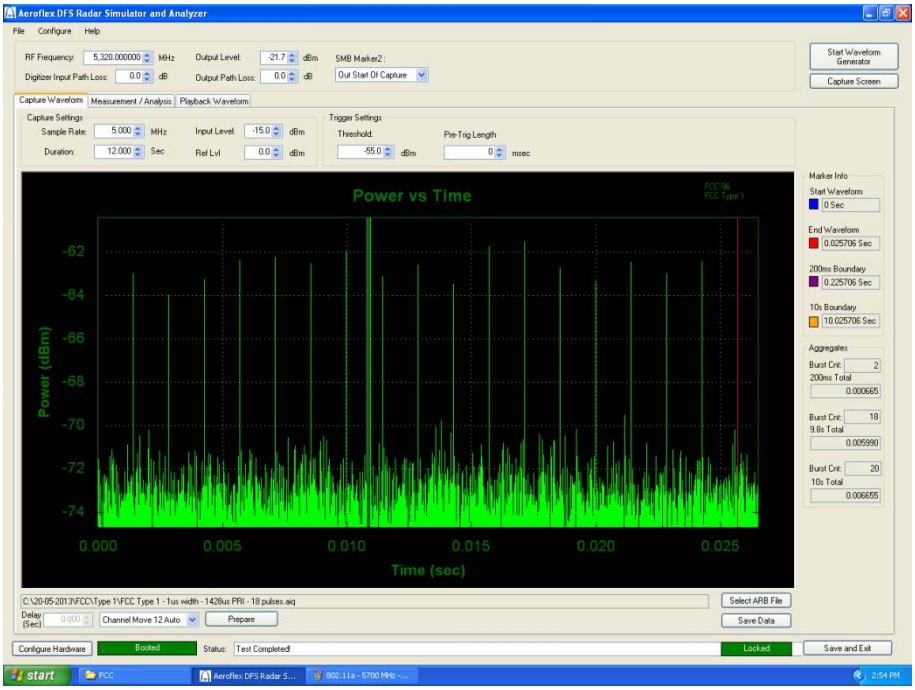

Limit Clause 15.407 (h)(2(iii) and FCC 06-96, Table 4

Channel Move Time	<10s
Channel Closing Time (Aggregate Time During 200ms)	<200ms
Channel Closing Time (Aggregate Time During +200ms to 10s)	<60ms

Product Service

802.11(n) DFS - 40 MHz BW

Channel Move Time	1.979 seconds
Channel Closing Time (Aggregate Time During 200ms)	0.665 ms
Channel Closing Time (Aggregate Time During +200ms to 10s)	5.599 ms
Channel Closing Time (Aggregate Time During 10s)	6.654 ms

Overall Power vs Time Display, showing channel closing and move time

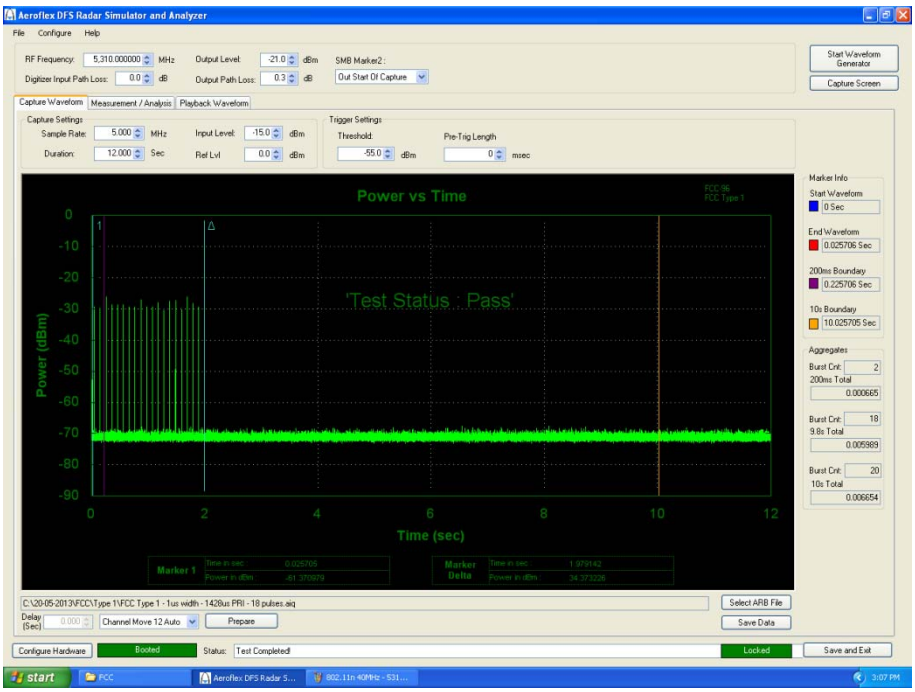

Product Service

Zoom of Radar Burst, Access Point and Client Signalling

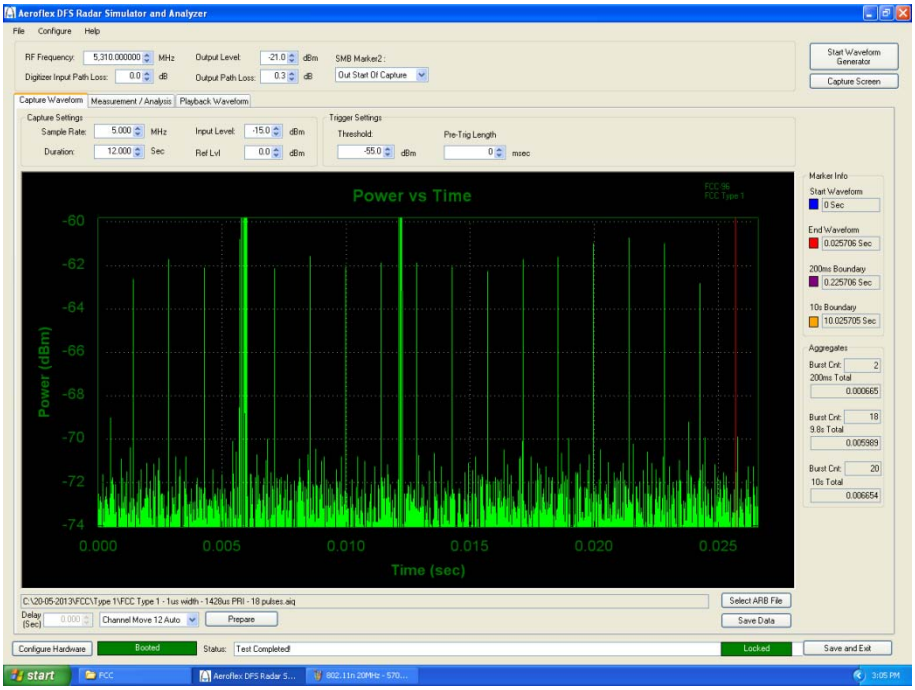

Limit Clause 15.407 (h)(2(iii) and FCC 06-96, Table 4

Channel Move Time	<10s
Channel Closing Time (Aggregate Time During 200ms)	<200ms
Channel Closing Time (Aggregate Time During +200ms to 10s)	<60ms

Product Service

SECTION 3

TEST EQUIPMENT USED

3.1 TEST EQUIPMENT USED

List of absolute measuring and other principal items of test equipment.

Instrument	Manufacturer	Type No.	TE No.	Calibration Period (months)	Calibration Due
Section 2.2 - In Service Monitoring					
30dB Attenuator	Narda	4772-30	463	-	TU
Spectrum Analyser	Hewlett Packard	E4407B	1154	12	17-Jul-2013
PXI RF Digitizer	Aeroflex	3025	4012	24	6-Dec-2013
PXI RF Synthesizer	Aeroflex	3010	4013	24	6-Dec-2013
PXI RF Synthesizer	Aeroflex	3010	4014	24	6-Dec-2013
PXI Digital RF Signal Generator	Aeroflex	3025	4015	24	6-Dec-2013
1800-6000 MHz Power Splitter	Mini-Circuits	ZN2PD-63-S+	4055	-	TU
1800-6000 MHz Power Splitter	Mini-Circuits	ZN2PD-63-S+	4056	-	TU

TU – Traceability Unscheduled

3.2 SUPPORT TEST EQUIPMENT

Instrument	Manufacturer	Type No.	Serial Number
Access Point (802.11 a/n)	Motorola	AP-650	10055522200026
PC	Dell	DCSM	36DJP2J

Product Service

3.3 MEASUREMENT UNCERTAINTY

For a 95% confidence level, the measurement uncertainties for defined systems are:-

Test Discipline	MU
In-Service Monitoring	Time: ± 0.47 % Power: ± 1.29 dB

Product Service

SECTION 4

PHOTOGRAPHS

4.1 TEST SET-UP PHOTOGRAPHS

See test set-up photographs exhibit “75920802 FCC Set Up Photos.pdf”.

4.2 DFS TEST EQUIPMENT

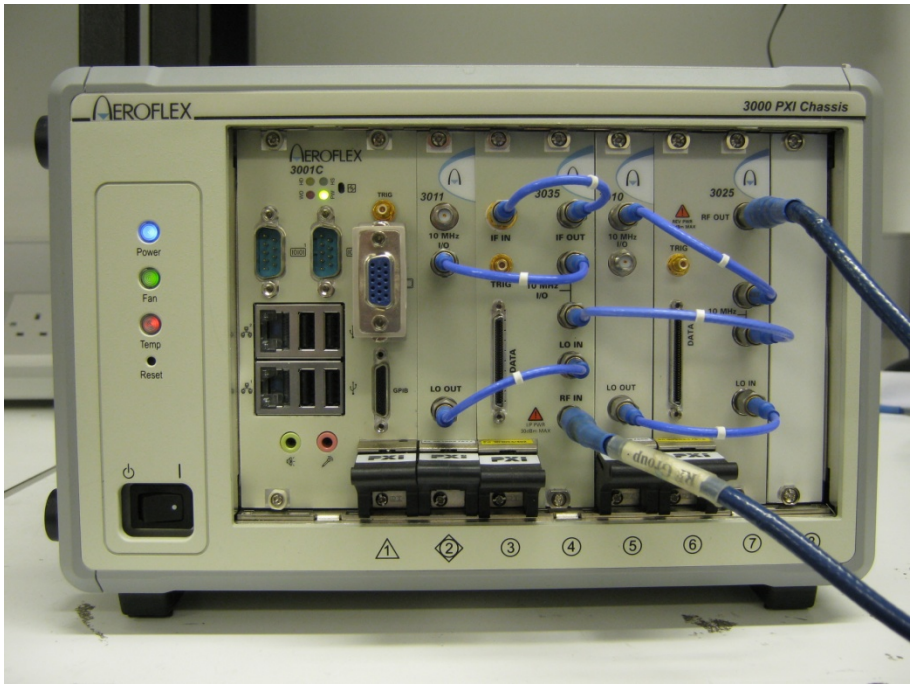

Test Set Up

SECTION 5

ACCREDITATION, DISCLAIMERS AND COPYRIGHT

5.1 ACCREDITATION, DISCLAIMERS AND COPYRIGHT

This report relates only to the actual item/items tested.

Our UKAS Accreditation does not cover opinions and interpretations and any expressed are outside the scope of our UKAS Accreditation.

Results of tests not covered by our UKAS Accreditation Schedule are marked NUA (Not UKAS Accredited).

This report must not be reproduced, except in its entirety, without the written permission of TÜV SÜD Product Service

© 2013 TÜV SÜD Product Service