Appendix C

Phantom Description

Schmid & Partner Engineering AG

s p e a g

Zeughausstrasse 43, 8004 Zurich, Switzerland
Phone +41 1 245 9700, Fax +41 1 245 9779
info@speag.com, http://www.speag.com

Certificate of Conformity / First Article Inspection

Item	SAM Twin Phantom V4.0
Type No	QD 000 P40 C
Series No	TP-1150 and higher
Manufacturer	SPEAG Zeughausstrasse 43 CH-8004 Zürich Switzerland

Tests
The series production process used allows the limitation to test of first articles.
Complete tests were made on the pre-series Type No. QD 000 P40 AA, Serial No. TP-1001 and on the series first article Type No. QD 000 P40 BA, Serial No. TP-1006. Certain parameters have been retested using further series items (called samples) or are tested at each item.

Test	Requirement	Details	Units tested
Dimensions	Compliant with the geometry according to the CAD model.	IT'IS CAD File (*)	First article, Samples
Material thickness of shell	Compliant with the requirements according to the standards	2mm +/- 0.2mm in flat and specific areas of head section	First article, Samples, TP-1314 ff.
Material thickness at ERP	Compliant with the requirements according to the standards	6mm +/- 0.2mm at ERP	First article, All items
Material parameters	Dielectric parameters for required frequencies	300 MHz – 6 GHz: Relative permittivity < 5, Loss tangent < 0.05	Material samples
Material resistivity	The material has been tested to be compatible with the liquids defined in the standards if handled and cleaned according to the instructions. Observe technical Note for material compatibility	DEGMBE based simulating liquids	Pre-series, First article, Material samples
Sagging	Compliant with the requirements according to the standards. Sagging of the flat section when filled with tissue simulating liquid	< 1% typical < 0.6% if filled with 155mm of HSL900 and without DUT below	Prototypes, Sample testing

Standards
[1] CENELEC EN 50361
[2] IEEE Std 1528-2003
[3] IEC 62209 Part I
[4] FCC OET Bulletin 65, Supplement C, Edition 01-01
(*) The IT'IS CAD file is derived from [2] and is also within the tolerance requirements of the shapes of the other documents.

Conformity
Based on the sample tests above, we certify that this item is in compliance with the uncertainty requirements of SAR measurements specified in standards [1] to [4]

Date 07.07.2005

Signature / Stamp

s p e a g
Schmid & Partner Engineering AG
Zeughausstrasse 43, 8004 Zurich, Switzerland
Phone +41 1 245 9700, Fax +41 1 245 9779
info@speag.com, http://www.speag.com

Unless otherwise stated the results shown in this test report refer only to the sample(s) tested and such sample(s) are retained for 90 days only.
除非另有說明，此報告結果僅對測試之樣品負責，同時此樣品僅保留90天。本報告未經本公司書面許可，不可部份複製。
This document is issued by the Company subject to its General Conditions of Service printed overleaf, available on request or accessible at www.sgs.com/terms_and_conditions.htm and for electronic format documents, subject to Terms and Conditions for Electronic Documents at www.sgs.com/terms_e-document.htm. Attention is drawn to the limitation of liability, indemnification and jurisdiction issues defined therein. Any holder of this document is advised that information contained hereon reflects the Company's findings at the time of its intervention only and within the limits of Client's instructions, if any. The Company's sole responsibility is to its Client and this document does not exonerate parties to a transaction from exercising all their rights and obligations under the transaction documents. This document cannot be reproduced except in full, without prior written approval of the Company. Any unauthorized alteration, forgery or falsification of the content or appearance of this document is unlawful and offenders may be prosecuted to the fullest extent of the law.

System Validation from Original Equipment Supplier

Calibration Laboratory of
Schmid & Partner
Engineering AG
Zeughausstrasse 43, 8004 Zurich, Switzerland

S Schweizerischer Kalibrierdienst
C Service suisse d'étalonnage
Servizio svizzero di taratura
S Swiss Calibration Service

Accredited by the Swiss Accreditation Service (SAS)
The Swiss Accreditation Service is one of the signatories to the EA Multilateral Agreement for the recognition of calibration certificates

Accreditation No.: SCS 0108

Client: SGS-TW (Auden)

Certificate No.: D750V3-1015_Aug19

CALIBRATION CERTIFICATE

Object: D750V3 - SN:1015

Calibration procedure(s): QA CAL 05.v11
Calibration Procedure for SAR Validation Sources between 0.7-3 GHz

Calibration date: August 23, 2019

This calibration certificate documents the traceability to national standards, which realize the physical units of measurements (SI). The measurements and the uncertainties with confidence probability are given on the following pages and are part of the certificate.

All calibrations have been conducted in the closed laboratory facility: environment temperature (22 ± 3)°C and humidity < 70%

Calibration Equipment used (M&TE critical for calibration)

Primary Standards	ID #	Cal Date (Certificate No.)	Scheduled Calibration
Power meter NRP	SN: 104778	03-Apr-19 (No. 217-02892/02893)	Apr-20
Power sensor NRP-Z91	SN: 103244	03-Apr-19 (No. 217-02892)	Apr-20
Power sensor NRP-Z91	SN: 103245	03-Apr-19 (No. 217-02893)	Apr-20
Reference 20 dB Attenuator	SN: 5058 (20k)	04-Apr-19 (No. 217-02894)	Apr-20
Type-N mismatch combination	SN: 5047.2 / 06327	04-Apr-19 (No. 217-02895)	Apr-20
Reference Probe EX3DV4	SN: 7349	29-May-19 (No. EX3-7349_May19)	May-20
DAE4	SN: 601	30-Apr-19 (No. DAE4-601_Apr19)	Apr-20

Secondary Standards	ID #	Check Date (in house)	Scheduled Check
Power meter E4419B	SN: GB39512475	30-Oct-14 (in house check Feb-19)	In house check: Oct-20
Power sensor HP 8481A	SN: US37292783	07-Oct-15 (in house check Oct-18)	In house check: Oct-20
Power sensor HP 8481A	SN: MY41092317	07-Oct-15 (in house check Oct-18)	In house check: Oct-20
RF generator R&S SMT 06	SN: 100972	15-Jun-15 (in house check Oct-18)	In house check: Oct-20
Network Analyzer Agilent E8358A	SN: US41080477	31-Mar-14 (in house check Oct-18)	In house check: Oct-19

	Name	Function	Signature
Calibrated by:	Jeton Kastrati	Laboratory Technician	
Approved by:	Katja Pokovic	Technical Manager	

Issued: August 23, 2019

This calibration certificate shall not be reproduced except in full without written approval of the laboratory.

Certificate No: D750V3-1015_Aug19 Page 1 of 6

Unless otherwise stated the results shown in this test report refer only to the sample(s) tested and such sample(s) are retained for 90 days only.
除非另有說明，此報告結果僅對測試之樣品負責，同時此樣品僅保留90天。本報告未經本公司書面許可，不可部份複製。
This document is issued by the Company subject to its General Conditions of Service printed overleaf, available on request or accessible at www.sgs.com/terms_and_conditions.htm and for electronic format documents, subject to Terms and Conditions for Electronic Documents at www.sgs.com/terms_e-document.htm. Attention is drawn to the limitation of liability, indemnification and jurisdiction issues defined therein. Any holder of this document is advised that information contained hereon reflects the Company's findings at the time of its intervention only and within the limits of Client's instructions, if any. The Company's sole responsibility is to its Client and this document does not exonerate parties to a transaction from exercising all their rights and obligations under the transaction documents. This document cannot be reproduced except in full, without prior written approval of the Company. Any unauthorized alteration, forgery or falsification of the content or appearance of this document is unlawful and offenders may be prosecuted to the fullest extent of the law.

Calibration Laboratory of
Schmid & Partner
Engineering AG
Zeughausstrasse 43, 8004 Zurich, Switzerland

S Schweizerischer Kalibrierdienst
C Service suisse d'étalonnage
S Servizio svizzero di taratura
Swiss Calibration Service

Accredited by the Swiss Accreditation Service (SAS)
The Swiss Accreditation Service is one of the signatories to the EA Multilateral Agreement for the recognition of calibration certificates

Accreditation No.: SCS 0108

Glossary:

TSL	tissue simulating liquid
ConvF	sensitivity in TSL / NORM x,y,z
N/A	not applicable or not measured

Calibration is Performed According to the Following Standards:

a) IEEE Std 1528-2013, "IEEE Recommended Practice for Determining the Peak Spatial-Averaged Specific Absorption Rate (SAR) in the Human Head from Wireless Communications Devices: Measurement Techniques", June 2013
b) IEC 62209-1, "Measurement procedure for the assessment of Specific Absorption Rate (SAR) from hand-held and body-mounted devices used next to the ear (frequency range of 300 MHz to 6 GHz)", July 2016
c) IEC 62209-2, "Procedure to determine the Specific Absorption Rate (SAR) for wireless communication devices used in close proximity to the human body (frequency range of 30 MHz to 6 GHz)", March 2010
d) KDB 865664, "SAR Measurement Requirements for 100 MHz to 6 GHz"

Additional Documentation:

e) DASY4/5 System Handbook

Methods Applied and Interpretation of Parameters:

- *Measurement Conditions:* Further details are available from the Validation Report at the end of the certificate. All figures stated in the certificate are valid at the frequency indicated.
- *Antenna Parameters with TSL:* The dipole is mounted with the spacer to position its feed point exactly below the center marking of the flat phantom section, with the arms oriented parallel to the body axis.
- *Feed Point Impedance and Return Loss:* These parameters are measured with the dipole positioned under the liquid filled phantom. The impedance stated is transformed from the measurement at the SMA connector to the feed point. The Return Loss ensures low reflected power. No uncertainty required.
- *Electrical Delay:* One-way delay between the SMA connector and the antenna feed point. No uncertainty required.
- *SAR measured:* SAR measured at the stated antenna input power.
- *SAR normalized:* SAR as measured, normalized to an input power of 1 W at the antenna connector.
- *SAR for nominal TSL parameters:* The measured TSL parameters are used to calculate the nominal SAR result.

The reported uncertainty of measurement is stated as the standard uncertainty of measurement multiplied by the coverage factor k=2, which for a normal distribution corresponds to a coverage probability of approximately 95%.

Certificate No: D750V3-1015_Aug19 Page 2 of 8

Unless otherwise stated the results shown in this test report refer only to the sample(s) tested and such sample(s) are retained for 90 days only.
除非另有說明，此報告結果僅對測試之樣品負責，同時此樣品僅保留90天。本報告未經本公司書面許可，不可部份複製。
This document is issued by the Company subject to its General Conditions of Service printed overleaf, available on request or accessible at www.sgs.com/terms_and_conditions.htm and for electronic format documents, subject to Terms and Conditions for Electronic Documents at www.sgs.com/terms_e-document.htm. Attention is drawn to the limitation of liability, indemnification and jurisdiction issues defined therein. Any holder of this document is advised that information contained hereon reflects the Company's findings at the time of its intervention only and within the limits of Client's instructions, if any. The Company's sole responsibility is to its Client and this document does not exonerate parties to a transaction from exercising all their rights and obligations under the transaction documents. This document cannot be reproduced except in full, without prior written approval of the Company. Any unauthorized alteration, forgery or falsification of the content or appearance of this document is unlawful and offenders may be prosecuted to the fullest extent of the law.

Measurement Conditions

DASY system configuration, as far as not given on page 1.

DASY Version	DASY5	V52.10.2
Extrapolation	Advanced Extrapolation	
Phantom	Modular Flat Phantom	
Distance Dipole Center - TSL	15 mm	with Spacer
Zoom Scan Resolution	dx, dy, dz = 5 mm	
Frequency	750 MHz ± 1 MHz	

Head TSL parameters

The following parameters and calculations were applied.

	Temperature	Permittivity	Conductivity
Nominal Head TSL parameters	22.0 °C	41.9	0.89 mho/m
Measured Head TSL parameters	(22.0 ± 0.2) °C	42.7 ± 6 %	0.90 mho/m ± 6 %
Head TSL temperature change during test	< 0.5 °C	—	—

SAR result with Head TSL

SAR averaged over 1 cm^3 (1 g) of Head TSL	Condition	
SAR measured	250 mW input power	2.16 W/kg
SAR for nominal Head TSL parameters	normalized to 1W	**8.60 W/kg ± 17.0 % (k=2)**

SAR averaged over 10 cm^3 (10 g) of Head TSL	condition	
SAR measured	250 mW input power	1.42 W/kg
SAR for nominal Head TSL parameters	normalized to 1W	**5.68 W/kg ± 16.5 % (k=2)**

Unless otherwise stated the results shown in this test report refer only to the sample(s) tested and such sample(s) are retained for 90 days only.
除非另有說明，此報告結果僅對測試之樣品負責，同時此樣品僅保留90天。本報告未經本公司書面許可，不可部份複製。
This document is issued by the Company subject to its General Conditions of Service printed overleaf, available on request or accessible at www.sgs.com/terms_and_conditions.htm and for electronic format documents, subject to Terms and Conditions for Electronic Documents at www.sgs.com/terms_e-document.htm. Attention is drawn to the limitation of liability, indemnification and jurisdiction issues defined therein. Any holder of this document is advised that information contained hereon reflects the Company's findings at the time of its intervention only and within the limits of Client's instructions, if any. The Company's sole responsibility is to its Client and this document does not exonerate parties to a transaction from exercising all their rights and obligations under the transaction documents. This document cannot be reproduced except in full, without prior written approval of the Company. Any unauthorized alteration, forgery or falsification of the content or appearance of this document is unlawful and offenders may be prosecuted to the fullest extent of the law.

SGS Taiwan Ltd. 台灣檢驗科技股份有限公司
No.134,Wu Kung Road, New Taipei Industrial Park, Wuku District, New Taipei City, Taiwan 24803/新北市五股區新北產業園區五工路 134 號
t (886-2) 2299-3279 f (886-2) 2298-0488 www.tw.sgs.com
Member of SGS Group

Appendix (Additional assessments outside the scope of SCS 0108)

Antenna Parameters with Head TSL

Impedance, transformed to feed point	53.1 Ω - 0.8 jΩ
Return Loss	-30.4 dB

General Antenna Parameters and Design

Electrical Delay (one direction)	1.037 ns

After long term use with 100W radiated power, only a slight warming of the dipole near the feedpoint can be measured.

The dipole is made of standard semirigid coaxial cable. The center conductor of the feeding line is directly connected to the second arm of the dipole. The antenna is therefore short-circuited for DC-signals. On some of the dipoles, small end caps are added to the dipole arms in order to improve matching when loaded according to the position as explained in the "Measurement Conditions" paragraph. The SAR data are not affected by this change. The overall dipole length is still according to the Standard.
No excessive force must be applied to the dipole arms, because they might bend or the soldered connections near the feedpoint may be damaged.

Additional EUT Data

Manufactured by	SPEAG

Unless otherwise stated the results shown in this test report refer only to the sample(s) tested and such sample(s) are retained for 90 days only.
除非另有說明，此報告結果僅對測試之樣品負責，同時此樣品僅保留90天。本報告未經本公司書面許可，不可部份複製。
This document is issued by the Company subject to its General Conditions of Service printed overleaf, available on request or accessible at www.sgs.com/terms_and_conditions.htm and for electronic format documents, subject to Terms and Conditions for Electronic Documents at www.sgs.com/terms_e-document.htm. Attention is drawn to the limitation of liability, indemnification and jurisdiction issues defined therein. Any holder of this document is advised that information contained hereon reflects the Company's findings at the time of its intervention only and within the limits of Client's instructions, if any. The Company's sole responsibility is to its Client and this document does not exonerate parties to a transaction from exercising all their rights and obligations under the transaction documents. This document cannot be reproduced except in full, without prior written approval of the Company. Any unauthorized alteration, forgery or falsification of the content or appearance of this document is unlawful and offenders may be prosecuted to the fullest extent of the law.
SGS Taiwan Ltd. 台灣檢驗科技股份有限公司 | No.134,Wu Kung Road, New Taipei Industrial Park, Wuku District, New Taipei City, Taiwan 24803/新北市五股區新北產業園區五工路 134 號
t (886-2) 2299-3279 f (886-2) 2298-0488 www.tw.sgs.com
Member of SGS Group

DASY5 Validation Report for Head TSL

Date: 23.08.2019

Test Laboratory: SPEAG, Zurich, Switzerland

DUT: Dipole 750 MHz; Type: D750V3; Serial: D750V3 - SN:1015

Communication System: UID 0 - CW; Frequency: 750 MHz
Medium parameters used: f = 750 MHz; σ = 0.9 S/m; ε_r = 42.7; ρ = 1000 kg/m^3
Phantom section: Flat Section
Measurement Standard: DASY5 (IEEE/IEC/ANSI C63.19-2011)

DASY52 Configuration:

- Probe: EX3DV4 - SN7349; ConvF(10.07, 10.07, 10.07) @ 750 MHz; Calibrated: 29.05.2019
- Sensor-Surface: 1.4mm (Mechanical Surface Detection)
- Electronics: DAE4 Sn601; Calibrated: 30.04.2019
- Phantom: Flat Phantom 4.9 (front); Type: QD 00L P49 AA; Serial: 1001
- DASY52 52.10.2(1504); SEMCAD X 14.6.12(7470)

Dipole Calibration for Head Tissue/Pin=250 mW, d=15mm/Zoom Scan (7x7x7)/Cube 0:
Measurement grid: dx=5mm, dy=5mm, dz=5mm
Reference Value = 59.91 V/m; Power Drift = -0.01 dB
Peak SAR (extrapolated) = 3.25 W/kg
SAR(1 g) = 2.16 W/kg; SAR(10 g) = 1.42 W/kg
Maximum value of SAR (measured) = 2.89 W/kg

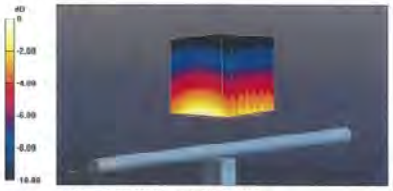

0 dB = 2.89 W/kg = 4.61 dBW/kg

Unless otherwise stated the results shown in this test report refer only to the sample(s) tested and such sample(s) are retained for 90 days only.
除非另有說明，此報告結果僅對測試之樣品負責，同時此樣品僅保留90天。本報告未經本公司書面許可，不可部份複製。
This document is issued by the Company subject to its General Conditions of Service printed overleaf, available on request or accessible at www.sgs.com/terms_and_conditions.htm and for electronic format documents, subject to Terms and Conditions for Electronic Documents at www.sgs.com/terms_e-document.htm. Attention is drawn to the limitation of liability, indemnification and jurisdiction issues defined therein. Any holder of this document is advised that information contained hereon reflects the Company's findings at the time of its intervention only and within the limits of Client's instructions, if any. The Company's sole responsibility is to its Client and this document does not exonerate parties to a transaction from exercising all their rights and obligations under the transaction documents. This document cannot be reproduced except in full, without prior written approval of the Company. Any unauthorized alteration, forgery or falsification of the content or appearance of this document is unlawful and offenders may be prosecuted to the fullest extent of the law.

SGS Taiwan Ltd. 台灣檢驗科技股份有限公司
No.134,Wu Kung Road, New Taipei Industrial Park, Wuku District, New Taipei City, Taiwan 24803/新北市五股區新北產業園區五工路 134 號
t (886-2) 2299-3279 f (886-2) 2298-0488 www.tw.sgs.com
Member of SGS Group

Impedance Measurement Plot for Head TSL

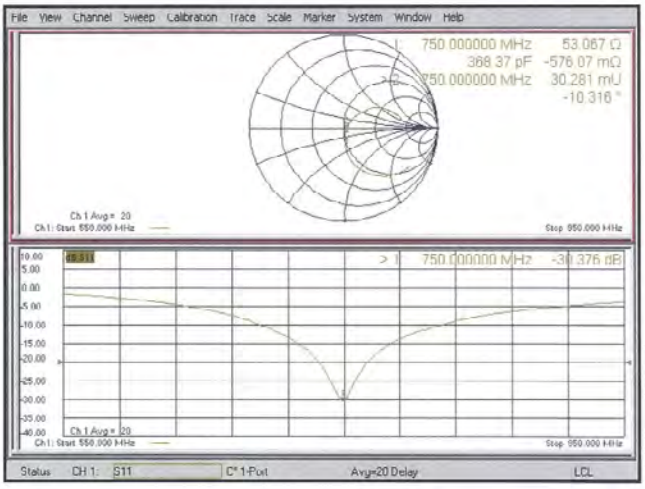

Unless otherwise stated the results shown in this test report refer only to the sample(s) tested and such sample(s) are retained for 90 days only.
除非另有說明，此報告結果僅對測試之樣品負責，同時此樣品僅保留90天。本報告未經本公司書面許可，不可部份複製。
This document is issued by the Company subject to its General Conditions of Service printed overleaf, available on request or accessible at www.sgs.com/terms_and_conditions.htm and for electronic format documents, subject to Terms and Conditions for Electronic Documents at www.sgs.com/terms_e-document.htm. Attention is drawn to the limitation of liability, indemnification and jurisdiction issues defined therein. Any holder of this document is advised that information contained hereon reflects the Company's findings at the time of its intervention only and within the limits of Client's instructions, if any. The Company's sole responsibility is to its Client and this document does not exonerate parties to a transaction from exercising all their rights and obligations under the transaction documents. This document cannot be reproduced except in full, without prior written approval of the Company. Any unauthorized alteration, forgery or falsification of the content or appearance of this document is unlawful and offenders may be prosecuted to the fullest extent of the law.

SGS Taiwan Ltd. 台灣檢驗科技股份有限公司
No.134,Wu Kung Road, New Taipei Industrial Park, Wuku District, New Taipei City, Taiwan 24803/新北市五股區新北產業園區五工路 134 號
t (886-2) 2299-3279 f (886-2) 2298-0488 www.tw.sgs.com
Member of SGS Group

Calibration Laboratory of
Schmid & Partner
Engineering AG
Zeughausstrasse 43, 8004 Zurich, Switzerland

S Schweizerischer Kalibrierdienst
C Service suisse d'étalonnage
Servizio svizzero di taratura
S Swiss Calibration Service

Accredited by the Swiss Accreditation Service (SAS)
The Swiss Accreditation Service is one of the signatories to the EA Multilateral Agreement for the recognition of calibration certificates

Accreditation No.: SCS 0108

Client **Auden** **Certificate No: D750V3-1078_Jun19**

CALIBRATION CERTIFICATE

Object	D750V3 - SN:1078
Calibration procedure(s)	QA CAL-05.v11 Calibration Procedure for SAR Validation Sources between 0.7-3 GHz
Calibration date:	June 27, 2019

This calibration certificate documents the traceability to national standards, which realize the physical units of measurements (SI). The measurements and the uncertainties with confidence probability are given on the following pages and are part of the certificate.

All calibrations have been conducted in the closed laboratory facility: environment temperature (22 ± 3)°C and humidity < 70%.

Calibration Equipment used (M&TE critical for calibration)

Primary Standards	ID #	Cal Date (Certificate No.)	Scheduled Calibration
Power meter NRP	SN: 104778	03-Apr-19 (No. 217-02892/02893)	Apr-20
Power sensor NRP-Z91	SN: 103244	03-Apr-19 (No. 217-02892)	Apr-20
Power sensor NRP-Z91	SN: 103245	03-Apr-19 (No. 217-02893)	Apr-20
Reference 20 dB Attenuator	SN: 5058 (20k)	04-Apr-19 (No. 217-02894)	Apr-20
Type-N mismatch combination	SN: 5047.2 / 06327	04-Apr-19 (No. 217-02895)	Apr-20
Reference Probe EX3DV4	SN: 7349	29-May-19 (No. EX3-7349_May19)	May-20
DAE4	SN: 601	30-Apr-19 (No. DAE4-601_Apr19)	Apr-20

Secondary Standards	ID #	Check Date (in house)	Scheduled Check
Power meter E4419B	SN: GB39512475	30-Oct-14 (in house check Feb-19)	In house check: Oct-20
Power sensor HP 8481A	SN: US37292783	07-Oct-15 (in house check Oct-18)	In house check: Oct-20
Power sensor HP 8481A	SN: MY41092317	07-Oct-15 (in house check Oct-18)	In house check: Oct-20
RF generator R&S SMT-06	SN: 100972	15-Jun-15 (in house check Oct-18)	In house check: Oct-20
Network Analyzer Agilent E8358A	SN: US41080477	31-Mar-14 (in house check Oct-18)	In house check: Oct-19

	Name	Function	Signature
Calibrated by:	Michael Weber	Laboratory Technician	M.Weber
Approved by:	Katja Pokovic	Technical Manager	

Issued: June 27, 2019

This calibration certificate shall not be reproduced except in full without written approval of the laboratory.

Unless otherwise stated the results shown in this test report refer only to the sample(s) tested and such sample(s) are retained for 90 days only.
除非另有說明，此報告結果僅對測試之樣品負責，同時此樣品僅保留90天。本報告未經本公司書面許可，不可部份複製。
This document is issued by the Company subject to its General Conditions of Service printed overleaf, available on request or accessible at www.sgs.com/terms_and_conditions.htm and for electronic format documents, subject to Terms and Conditions for Electronic Documents at www.sgs.com/terms_e-document.htm. Attention is drawn to the limitation of liability, indemnification and jurisdiction issues defined therein. Any holder of this document is advised that information contained hereon reflects the Company's findings at the time of its intervention only and within the limits of Client's instructions, if any. The Company's sole responsibility is to its Client and this document does not exonerate parties to a transaction from exercising all their rights and obligations under the transaction documents. This document cannot be reproduced except in full, without prior written approval of the Company. Any unauthorized alteration, forgery or falsification of the content or appearance of this document is unlawful and offenders may be prosecuted to the fullest extent of the law.

Calibration Laboratory of
Schmid & Partner
Engineering AG
Zeughausstrasse 43, 8004 Zurich, Switzerland

S Schweizerischer Kalibrierdienst
C Service suisse d'étalonnage
Servizio svizzero di taratura
S Swiss Calibration Service

Accredited by the Swiss Accreditation Service (SAS)
The Swiss Accreditation Service is one of the signatories to the EA Multilateral Agreement for the recognition of calibration certificates

Accreditation No.: **SCS 0108**

Glossary:

TSL	tissue simulating liquid
ConvF	sensitivity in TSL / NORM x,y,z
N/A	not applicable or not measured

Calibration is Performed According to the Following Standards:

a) IEEE Std 1528-2013, "IEEE Recommended Practice for Determining the Peak Spatial-Averaged Specific Absorption Rate (SAR) in the Human Head from Wireless Communications Devices: Measurement Techniques", June 2013
b) IEC 62209-1, "Measurement procedure for the assessment of Specific Absorption Rate (SAR) from hand-held and body-mounted devices used next to the ear (frequency range of 300 MHz to 6 GHz)", July 2016
c) IEC 62209-2, "Procedure to determine the Specific Absorption Rate (SAR) for wireless communication devices used in close proximity to the human body (frequency range of 30 MHz to 6 GHz)", March 2010
d) KDB 865664, "SAR Measurement Requirements for 100 MHz to 6 GHz"

Additional Documentation:

e) DASY4/5 System Handbook

Methods Applied and Interpretation of Parameters:

- *Measurement Conditions:* Further details are available from the Validation Report at the end of the certificate. All figures stated in the certificate are valid at the frequency indicated.
- *Antenna Parameters with TSL:* The dipole is mounted with the spacer to position its feed point exactly below the center marking of the flat phantom section, with the arms oriented parallel to the body axis.
- *Feed Point Impedance and Return Loss:* These parameters are measured with the dipole positioned under the liquid filled phantom. The impedance stated is transformed from the measurement at the SMA connector to the feed point. The Return Loss ensures low reflected power. No uncertainty required.
- *Electrical Delay:* One-way delay between the SMA connector and the antenna feed point. No uncertainty required.
- *SAR measured:* SAR measured at the stated antenna input power.
- *SAR normalized:* SAR as measured, normalized to an input power of 1 W at the antenna connector.
- *SAR for nominal TSL parameters:* The measured TSL parameters are used to calculate the nominal SAR result.

The reported uncertainty of measurement is stated as the standard uncertainty of measurement multiplied by the coverage factor k=2, which for a normal distribution corresponds to a coverage probability of approximately 95%.

Unless otherwise stated the results shown in this test report refer only to the sample(s) tested and such sample(s) are retained for 90 days only.
除非另有說明，此報告結果僅對測試之樣品負責，同時此樣品僅保留90天。本報告未經本公司書面許可，不可部份複製。
This document is issued by the Company subject to its General Conditions of Service printed overleaf, available on request or accessible at www.sgs.com/terms_and_conditions.htm and for electronic format documents, subject to Terms and Conditions for Electronic Documents at www.sgs.com/terms_e-document.htm. Attention is drawn to the limitation of liability, indemnification and jurisdiction issues defined therein. Any holder of this document is advised that information contained hereon reflects the Company's findings at the time of its intervention only and within the limits of Client's instructions, if any. The Company's sole responsibility is to its Client and this document does not exonerate parties to a transaction from exercising all their rights and obligations under the transaction documents. This document cannot be reproduced except in full, without prior written approval of the Company. Any unauthorized alteration, forgery or falsification of the content or appearance of this document is unlawful and offenders may be prosecuted to the fullest extent of the law.

Measurement Conditions

DASY system configuration, as far as not given on page 1.

DASY Version	DASY5	V52.10.2
Extrapolation	Advanced Extrapolation	
Phantom	Modular Flat Phantom	
Distance Dipole Center - TSL	15 mm	with Spacer
Zoom Scan Resolution	dx, dy, dz = 5 mm	
Frequency	750 MHz ± 1 MHz	

Head TSL parameters

The following parameters and calculations were applied.

	Temperature	**Permittivity**	**Conductivity**
Nominal Head TSL parameters	22.0 °C	41.9	0.89 mho/m
Measured Head TSL parameters	(22.0 ± 0.2) °C	42.0 ± 6 %	0.88 mho/m ± 6 %
Head TSL temperature change during test	< 0.5 °C	----	----

SAR result with Head TSL

SAR averaged over 1 cm^3 (1 g) of Head TSL	Condition	
SAR measured	250 mW input power	2.13 W/kg
SAR for nominal Head TSL parameters	normalized to 1W	**8.60 W/kg ± 17.0 % (k=2)**

SAR averaged over 10 cm^3 (10 g) of Head TSL	condition	
SAR measured	250 mW input power	1.39 W/kg
SAR for nominal Head TSL parameters	normalized to 1W	**5.60 W/kg ± 16.5 % (k=2)**

Body TSL parameters

The following parameters and calculations were applied.

	Temperature	**Permittivity**	**Conductivity**
Nominal Body TSL parameters	22.0 °C	55.5	0.96 mho/m
Measured Body TSL parameters	(22.0 ± 0.2) °C	55.5 ± 6 %	0.96 mho/m ± 6 %
Body TSL temperature change during test	< 0.5 °C	----	----

SAR result with Body TSL

SAR averaged over 1 cm^3 (1 g) of Body TSL	Condition	
SAR measured	250 mW input power	2.16 W/kg
SAR for nominal Body TSL parameters	normalized to 1W	**8.64 W/kg ± 17.0 % (k=2)**

SAR averaged over 10 cm^3 (10 g) of Body TSL	condition	
SAR measured	250 mW input power	1.42 W/kg
SAR for nominal Body TSL parameters	normalized to 1W	**5.68 W/kg ± 16.5 % (k=2)**

Unless otherwise stated the results shown in this test report refer only to the sample(s) tested and such sample(s) are retained for 90 days only.
除非另有說明，此報告結果僅對測試之樣品負責，同時此樣品僅保留90天。本報告未經本公司書面許可，不可部份複製。
This document is issued by the Company subject to its General Conditions of Service printed overleaf, available on request or accessible at www.sgs.com/terms_and_conditions.htm and for electronic format documents, subject to Terms and Conditions for Electronic Documents at www.sgs.com/terms_e-document.htm. Attention is drawn to the limitation of liability, indemnification and jurisdiction issues defined therein. Any holder of this document is advised that information contained hereon reflects the Company's findings at the time of its intervention only and within the limits of Client's instructions, if any. The Company's sole responsibility is to its Client and this document does not exonerate parties to a transaction from exercising all their rights and obligations under the transaction documents. This document cannot be reproduced except in full, without prior written approval of the Company. Any unauthorized alteration, forgery or falsification of the content or appearance of this document is unlawful and offenders may be prosecuted to the fullest extent of the law.

SGS Taiwan Ltd. 台灣檢驗科技股份有限公司 | No.134,Wu Kung Road, New Taipei Industrial Park, Wuku District, New Taipei City, Taiwan 24803/新北市五股區新北產業園區五工路 134 號
t (886-2) 2299-3279 f (886-2) 2298-0488 www.tw.sgs.com
Member of SGS Group

Appendix (Additional assessments outside the scope of SCS 0108)

Antenna Parameters with Head TSL

Impedance, transformed to feed point	55.4 Ω + 1.4 jΩ
Return Loss	- 25.5 dB

Antenna Parameters with Body TSL

Impedance, transformed to feed point	50.3 Ω - 2.4 jΩ
Return Loss	- 32.3 dB

General Antenna Parameters and Design

Electrical Delay (one direction)	1.037 ns

After long term use with 100W radiated power, only a slight warming of the dipole near the feedpoint can be measured.

The dipole is made of standard semirigid coaxial cable. The center conductor of the feeding line is directly connected to the second arm of the dipole. The antenna is therefore short-circuited for DC-signals. On some of the dipoles, small end caps are added to the dipole arms in order to improve matching when loaded according to the position as explained in the "Measurement Conditions" paragraph. The SAR data are not affected by this change. The overall dipole length is still according to the Standard.
No excessive force must be applied to the dipole arms, because they might bend or the soldered connections near the feedpoint may be damaged.

Additional EUT Data

Manufactured by	SPEAG

Unless otherwise stated the results shown in this test report refer only to the sample(s) tested and such sample(s) are retained for 90 days only.
除非另有說明，此報告結果僅對測試之樣品負責，同時此樣品僅保留90天。本報告未經本公司書面許可，不可部份複製。
This document is issued by the Company subject to its General Conditions of Service printed overleaf, available on request or accessible at www.sgs.com/terms_and_conditions.htm and for electronic format documents, subject to Terms and Conditions for Electronic Documents at www.sgs.com/terms_e-document.htm. Attention is drawn to the limitation of liability, indemnification and jurisdiction issues defined therein. Any holder of this document is advised that information contained hereon reflects the Company's findings at the time of its intervention only and within the limits of Client's instructions, if any. The Company's sole responsibility is to its Client and this document does not exonerate parties to a transaction from exercising all their rights and obligations under the transaction documents. This document cannot be reproduced except in full, without prior written approval of the Company. Any unauthorized alteration, forgery or falsification of the content or appearance of this document is unlawful and offenders may be prosecuted to the fullest extent of the law.
SGS Taiwan Ltd. 台灣檢驗科技股份有限公司 | No.134,Wu Kung Road, New Taipei Industrial Park, Wuku District, New Taipei City, Taiwan 24803/新北市五股區新北產業園區五工路 134 號
t (886-2) 2299-3279 f (886-2) 2298-0488 www.tw.sgs.com
Member of SGS Group

DASY5 Validation Report for Head TSL

Date: 20.06.2019

Test Laboratory: SPEAG, Zurich, Switzerland

DUT: Dipole 750 MHz; Type: D750V3; Serial: D750V3 - SN:1078

Communication System: UID 0 - CW; Frequency: 750 MHz
Medium parameters used: f = 750 MHz; σ = 0.88 S/m; ε_r = 42; ρ = 1000 kg/m^3
Phantom section: Flat Section
Measurement Standard: DASY5 (IEEE/IEC/ANSI C63.19-2011)

DASY52 Configuration:

- Probe: EX3DV4 - SN7349; ConvF(10.07, 10.07, 10.07) @ 750 MHz; Calibrated: 29.05.2019
- Sensor-Surface: 1.4mm (Mechanical Surface Detection)
- Electronics: DAE4 Sn601; Calibrated: 30.04.2019
- Phantom: Flat Phantom 4.9 (front); Type: QD 00L P49 AA; Serial: 1001
- DASY52 52.10.2(1504); SEMCAD X 14.6.12(7470)

Dipole Calibration for Head Tissue/Pin=250 mW, d=15mm/Zoom Scan (7x7x7)/Cube 0:

Measurement grid: dx=5mm, dy=5mm, dz=5mm
Reference Value = 60.18 V/m; Power Drift = 0.01 dB
Peak SAR (extrapolated) = 3.21 W/kg
SAR(1 g) = 2.13 W/kg; SAR(10 g) = 1.39 W/kg
Maximum value of SAR (measured) = 2.83 W/kg

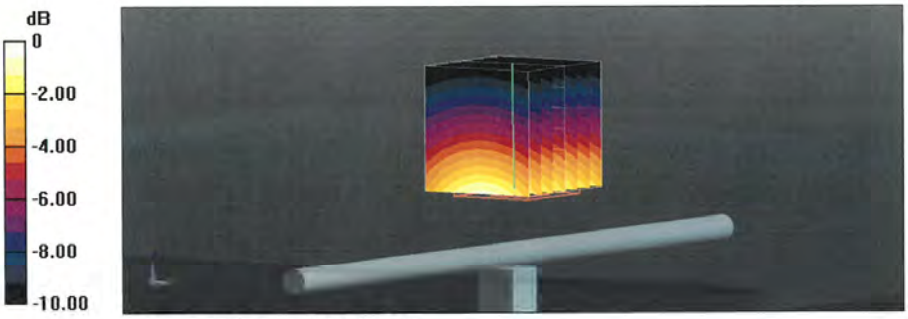

0 dB = 2.83 W/kg = 4.52 dBW/kg

Unless otherwise stated the results shown in this test report refer only to the sample(s) tested and such sample(s) are retained for 90 days only.
除非另有說明，此報告結果僅對測試之樣品負責，同時此樣品僅保留90天。本報告未經本公司書面許可，不可部份複製。
This document is issued by the Company subject to its General Conditions of Service printed overleaf, available on request or accessible at www.sgs.com/terms_and_conditions.htm and for electronic format documents, subject to Terms and Conditions for Electronic Documents at www.sgs.com/terms_e-document.htm. Attention is drawn to the limitation of liability, indemnification and jurisdiction issues defined therein. Any holder of this document is advised that information contained hereon reflects the Company's findings at the time of its intervention only and within the limits of Client's instructions, if any. The Company's sole responsibility is to its Client and this document does not exonerate parties to a transaction from exercising all their rights and obligations under the transaction documents. This document cannot be reproduced except in full, without prior written approval of the Company. Any unauthorized alteration, forgery or falsification of the content or appearance of this document is unlawful and offenders may be prosecuted to the fullest extent of the law.

SGS Taiwan Ltd. 台灣檢驗科技股份有限公司
No.134,Wu Kung Road, New Taipei Industrial Park, Wuku District, New Taipei City, Taiwan 24803/新北市五股區新北產業園區五工路 134 號
t (886-2) 2299-3279 f (886-2) 2298-0488 www.tw.sgs.com
Member of SGS Group

Impedance Measurement Plot for Head TSL

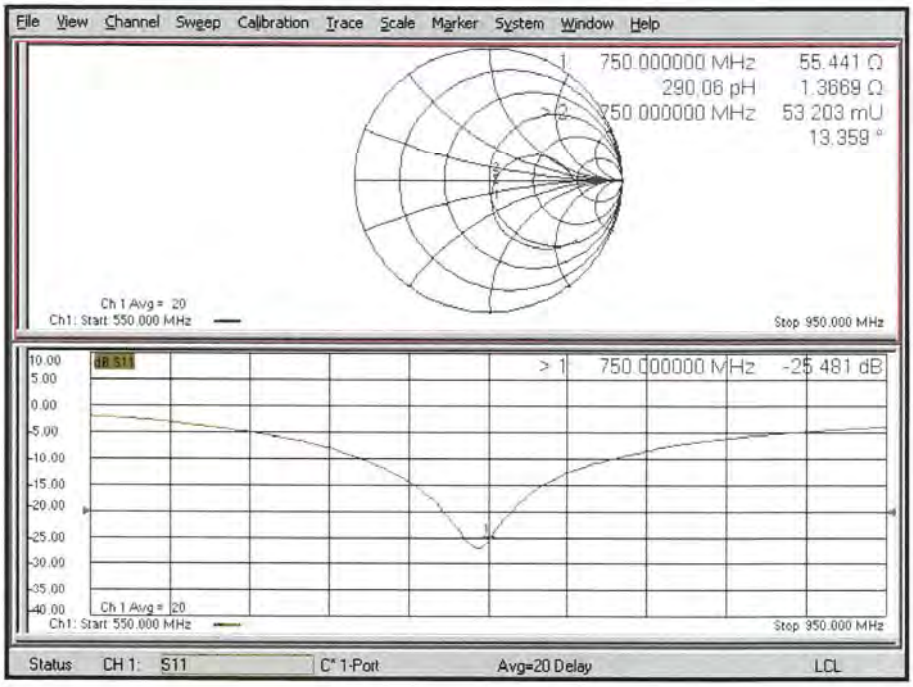

Unless otherwise stated the results shown in this test report refer only to the sample(s) tested and such sample(s) are retained for 90 days only.
除非另有說明，此報告結果僅對測試之樣品負責，同時此樣品僅保留90天。本報告未經本公司書面許可，不可部份複製。
This document is issued by the Company subject to its General Conditions of Service printed overleaf, available on request or accessible at www.sgs.com/terms_and_conditions.htm and for electronic format documents, subject to Terms and Conditions for Electronic Documents at www.sgs.com/terms_e-document.htm. Attention is drawn to the limitation of liability, indemnification and jurisdiction issues defined therein. Any holder of this document is advised that information contained hereon reflects the Company's findings at the time of its intervention only and within the limits of Client's instructions, if any. The Company's sole responsibility is to its Client and this document does not exonerate parties to a transaction from exercising all their rights and obligations under the transaction documents. This document cannot be reproduced except in full, without prior written approval of the Company. Any unauthorized alteration, forgery or falsification of the content or appearance of this document is unlawful and offenders may be prosecuted to the fullest extent of the law.

SGS Taiwan Ltd. 台灣檢驗科技股份有限公司
No.134,Wu Kung Road, New Taipei Industrial Park, Wuku District, New Taipei City, Taiwan 24803/新北市五股區新北產業園區五工路 134 號
t (886-2) 2299-3279 f (886-2) 2298-0488 www.tw.sgs.com
Member of SGS Group

DASY5 Validation Report for Body TSL

Date: 27.06.2019

Test Laboratory: SPEAG, Zurich, Switzerland

DUT: Dipole 750 MHz; Type: D750V3; Serial: D750V3 - SN:1078

Communication System: UID 0 - CW; Frequency: 750 MHz
Medium parameters used: f = 750 MHz; σ = 0.96 S/m; ε_r = 55.5; ρ = 1000 kg/m^3
Phantom section: Flat Section
Measurement Standard: DASY5 (IEEE/IEC/ANSI C63.19-2011)

DASY52 Configuration:

- Probe: EX3DV4 - SN7349; ConvF(10.4, 10.4, 10.4) @ 750 MHz; Calibrated: 29.05.2019
- Sensor-Surface: 1.4mm (Mechanical Surface Detection)
- Electronics: DAE4 Sn601; Calibrated: 30.04.2019
- Phantom: Flat Phantom 4.9 (Back); Type: QD 00R P49 AA; Serial: 1005
- DASY52 52.10.2(1504); SEMCAD X 14.6.12(7470)

Dipole Calibration for Body Tissue/Pin=250 mW, d=15mm/Zoom Scan (7x7x7)/Cube 0:

Measurement grid: dx=5mm, dy=5mm, dz=5mm
Reference Value = 55.85 V/m; Power Drift = -0.00 dB
Peak SAR (extrapolated) = 3.24 W/kg
SAR(1 g) = 2.16 W/kg; SAR(10 g) = 1.42 W/kg
Maximum value of SAR (measured) = 2.89 W/kg

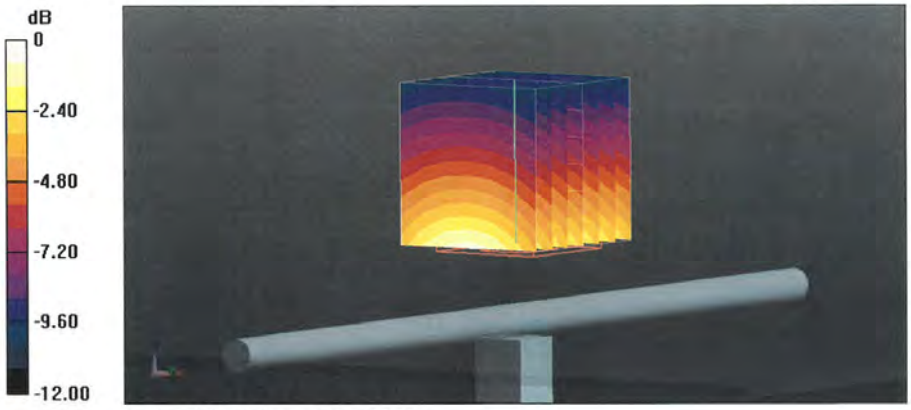

0 dB = 2.89 W/kg = 4.61 dBW/kg

Unless otherwise stated the results shown in this test report refer only to the sample(s) tested and such sample(s) are retained for 90 days only.
除非另有說明，此報告結果僅對測試之樣品負責，同時此樣品僅保留90天。本報告未經本公司書面許可，不可部份複製。
This document is issued by the Company subject to its General Conditions of Service printed overleaf, available on request or accessible at www.sgs.com/terms_and_conditions.htm and for electronic format documents, subject to Terms and Conditions for Electronic Documents at www.sgs.com/terms_e-document.htm. Attention is drawn to the limitation of liability, indemnification and jurisdiction issues defined therein. Any holder of this document is advised that information contained hereon reflects the Company's findings at the time of its intervention only and within the limits of Client's instructions, if any. The Company's sole responsibility is to its Client and this document does not exonerate parties to a transaction from exercising all their rights and obligations under the transaction documents. This document cannot be reproduced except in full, without prior written approval of the Company. Any unauthorized alteration, forgery or falsification of the content or appearance of this document is unlawful and offenders may be prosecuted to the fullest extent of the law.

SGS Taiwan Ltd. 台灣檢驗科技股份有限公司
No.134,Wu Kung Road, New Taipei Industrial Park, Wuku District, New Taipei City, Taiwan 24803/新北市五股區新北產業園區五工路 134 號
t (886-2) 2299-3279 f (886-2) 2298-0488 www.tw.sgs.com
Member of SGS Group

Impedance Measurement Plot for Body TSL

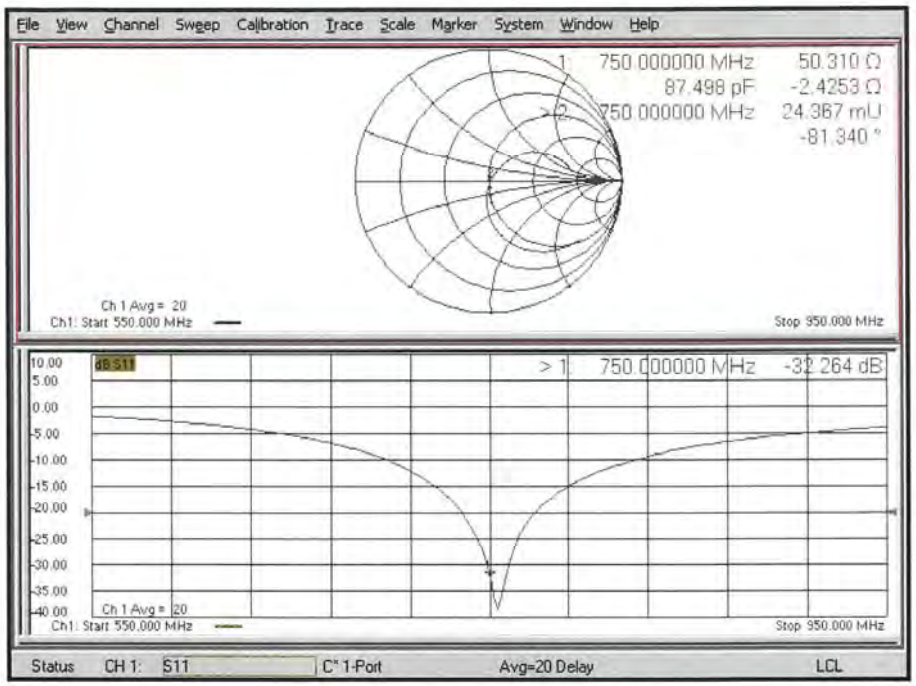

Unless otherwise stated the results shown in this test report refer only to the sample(s) tested and such sample(s) are retained for 90 days only.
除非另有說明，此報告結果僅對測試之樣品負責，同時此樣品僅保留90天。本報告未經本公司書面許可，不可部份複製。
This document is issued by the Company subject to its General Conditions of Service printed overleaf, available on request or accessible at www.sgs.com/terms_and_conditions.htm and for electronic format documents, subject to Terms and Conditions for Electronic Documents at www.sgs.com/terms_e-document.htm. Attention is drawn to the limitation of liability, indemnification and jurisdiction issues defined therein. Any holder of this document is advised that information contained hereon reflects the Company's findings at the time of its intervention only and within the limits of Client's instructions, if any. The Company's sole responsibility is to its Client and this document does not exonerate parties to a transaction from exercising all their rights and obligations under the transaction documents. This document cannot be reproduced except in full, without prior written approval of the Company. Any unauthorized alteration, forgery or falsification of the content or appearance of this document is unlawful and offenders may be prosecuted to the fullest extent of the law.

SGS Taiwan Ltd. 台灣檢驗科技股份有限公司
No.134,Wu Kung Road, New Taipei Industrial Park, Wuku District, New Taipei City, Taiwan 24803/新北市五股區新北產業園區五工路 134 號
t (886-2) 2299-3279 f (886-2) 2298-0488 www.tw.sgs.com
Member of SGS Group

Calibration Laboratory of
Schmid & Partner
Engineering AG
Zeughausstrasse 43, 8004 Zurich, Switzerland

S Schweizerischer Kalibrierdienst
C Service suisse d'étalonnage
S Servizio svizzero di taratura
S Swiss Calibration Service

Accredited by the Swiss Accreditation Service (SAS)
The Swiss Accreditation Service is one of the signatories to the EA Multilateral Agreement for the recognition of calibration certificates

Accreditation No.: **SCS 0108**

Client **SGS-TW (Auden)**

Certificate No: **D835V2-4d063_Aug19**

CALIBRATION CERTIFICATE

Object	D835V2 - SN:4d063
Calibration procedure(s)	QA CAL-05.v11 Calibration Procedure for SAR Validation Sources between 0.7-3 GHz
Calibration date:	August 23, 2019

This calibration certificate documents the traceability to national standards, which realize the physical units of measurements (SI). The measurements and the uncertainties with confidence probability are given on the following pages and are part of the certificate.

All calibrations have been conducted in the closed laboratory facility: environment temperature (22 ± 3)°C and humidity < 70%.

Calibration Equipment used (M&TE critical for calibration)

Primary Standards	ID #	Cal Date (Certificate No.)	Scheduled Calibration
Power meter NRP	SN: 104778	03-Apr-19 (No. 217-02892/02893)	Apr-20
Power sensor NRP-Z91	SN: 103244	03-Apr-19 (No. 217-02892)	Apr-20
Power sensor NRP-Z91	SN: 103245	03-Apr-19 (No. 217-02893)	Apr-20
Reference 20 dB Attenuator	SN: 5058 (20k)	04-Apr-19 (No. 217-02894)	Apr-20
Type-N mismatch combination	SN: 5047.2 / 06327	04-Apr-19 (No. 217-02895)	Apr-20
Reference Probe EX3DV4	SN: 7349	29-May-19 (No. EX3-7349_May19)	May-20
DAE4	SN: 601	30-Apr-19 (No. DAE4-601_Apr19)	Apr-20

Secondary Standards	ID #	Check Date (in house)	Scheduled Check
Power meter E4419B	SN: GB39512475	30-Oct-14 (in house check Feb-19)	In house check: Oct-20
Power sensor HP 8481A	SN: US37292783	07-Oct-15 (in house check Oct-18)	In house check: Oct-20
Power sensor HP 8481A	SN: MY41092317	07-Oct-15 (in house check Oct-18)	In house check: Oct-20
RF generator R&S SMT-06	SN: 100972	15-Jun-15 (in house check Oct-18)	In house check: Oct-20
Network Analyzer Agilent E8358A	SN: US41080477	31-Mar-14 (in house check Oct-18)	In house check: Oct-19

	Name	Function	Signature
Calibrated by:	Jelčin Kastrati	Laboratory Technician	
Approved by:	Katja Pokovic	Technical Manager	

Issued: August 23, 2019

This calibration certificate shall not be reproduced except in full without written approval of the laboratory.

Unless otherwise stated the results shown in this test report refer only to the sample(s) tested and such sample(s) are retained for 90 days only.
除非另有說明，此報告結果僅對測試之樣品負責，同時此樣品僅保留90天。本報告未經本公司書面許可，不可部份複製。
This document is issued by the Company subject to its General Conditions of Service printed overleaf, available on request or accessible at www.sgs.com/terms_and_conditions.htm and for electronic format documents, subject to Terms and Conditions for Electronic Documents at www.sgs.com/terms_e-document.htm. Attention is drawn to the limitation of liability, indemnification and jurisdiction issues defined therein. Any holder of this document is advised that information contained hereon reflects the Company's findings at the time of its intervention only and within the limits of Client's instructions, if any. The Company's sole responsibility is to its Client and this document does not exonerate parties to a transaction from exercising all their rights and obligations under the transaction documents. This document cannot be reproduced except in full, without prior written approval of the Company. Any unauthorized alteration, forgery or falsification of the content or appearance of this document is unlawful and offenders may be prosecuted to the fullest extent of the law.

Calibration Laboratory of
Schmid & Partner
Engineering AG
Zeughausstrasse 43, 8004 Zurich, Switzerland

S Schweizerischer Kalibrierdienst
C Service suisse d'étalonnage
S Servizio svizzero di taratura
Swiss Calibration Service

Accredited by the Swiss Accreditation Service (SAS)
The Swiss Accreditation Service is one of the signatories to the EA Multilateral Agreement for the recognition of calibration certificates

Accreditation No.: SCS 0108

Glossary:

TSL	tissue simulating liquid
ConvF	sensitivity in TSL / NORM x,y,z
N/A	not applicable or not measured

Calibration is Performed According to the Following Standards:

a) IEEE Std 1528-2013, "IEEE Recommended Practice for Determining the Peak Spatial-Averaged Specific Absorption Rate (SAR) in the Human Head from Wireless Communications Devices: Measurement Techniques", June 2013
b) IEC 62209-1, "Measurement procedure for the assessment of Specific Absorption Rate (SAR) from hand-held and body-mounted devices used next to the ear (frequency range of 300 MHz to 6 GHz)", July 2016
c) IEC 62209-2, "Procedure to determine the Specific Absorption Rate (SAR) for wireless communication devices used in close proximity to the human body (frequency range of 30 MHz to 6 GHz)", March 2010
d) KDB 865664, "SAR Measurement Requirements for 100 MHz to 6 GHz"

Additional Documentation:

e) DASY4/5 System Handbook

Methods Applied and Interpretation of Parameters:

- *Measurement Conditions:* Further details are available from the Validation Report at the end of the certificate. All figures stated in the certificate are valid at the frequency indicated.
- *Antenna Parameters with TSL:* The dipole is mounted with the spacer to position its feed point exactly below the center marking of the flat phantom section, with the arms oriented parallel to the body axis.
- *Feed Point Impedance and Return Loss:* These parameters are measured with the dipole positioned under the liquid filled phantom. The impedance stated is transformed from the measurement at the SMA connector to the feed point. The Return Loss ensures low reflected power. No uncertainty required.
- *Electrical Delay:* One-way delay between the SMA connector and the antenna feed point. No uncertainty required.
- *SAR measured:* SAR measured at the stated antenna input power.
- *SAR normalized:* SAR as measured, normalized to an input power of 1 W at the antenna connector.
- *SAR for nominal TSL parameters:* The measured TSL parameters are used to calculate the nominal SAR result.

The reported uncertainty of measurement is stated as the standard uncertainty of measurement multiplied by the coverage factor k=2, which for a normal distribution corresponds to a coverage probability of approximately 95%.

Unless otherwise stated the results shown in this test report refer only to the sample(s) tested and such sample(s) are retained for 90 days only.
除非另有說明，此報告結果僅對測試之樣品負責，同時此樣品僅保留90天。本報告未經本公司書面許可，不可部份複製。
This document is issued by the Company subject to its General Conditions of Service printed overleaf, available on request or accessible at www.sgs.com/terms_and_conditions.htm and for electronic format documents, subject to Terms and Conditions for Electronic Documents at www.sgs.com/terms_e-document.htm. Attention is drawn to the limitation of liability, indemnification and jurisdiction issues defined therein. Any holder of this document is advised that information contained hereon reflects the Company's findings at the time of its intervention only and within the limits of Client's instructions, if any. The Company's sole responsibility is to its Client and this document does not exonerate parties to a transaction from exercising all their rights and obligations under the transaction documents. This document cannot be reproduced except in full, without prior written approval of the Company. Any unauthorized alteration, forgery or falsification of the content or appearance of this document is unlawful and offenders may be prosecuted to the fullest extent of the law.

Measurement Conditions

DASY system configuration, as far as not given on page 1.

DASY Version	DASY5	V52.10.2
Extrapolation	Advanced Extrapolation	
Phantom	Modular Flat Phantom	
Distance Dipole Center - TSL	15 mm	with Spacer
Zoom Scan Resolution	dx, dy, dz = 5 mm	
Frequency	835 MHz ± 1 MHz	

Head TSL parameters

The following parameters and calculations were applied.

	Temperature	Permittivity	Conductivity
Nominal Head TSL parameters	22.0 °C	41.5	0.90 mho/m
Measured Head TSL parameters	(22.0 ± 0.2) °C	42.5 ± 6 %	0.92 mho/m ± 6 %
Head TSL temperature change during test	< 0.5 °C	---	---

SAR result with Head TSL

SAR averaged over 1 cm³ (1 g) of Head TSL	Condition	
SAR measured	250 mW input power	2.42 W/kg
SAR for nominal Head TSL parameters	normalized to 1W	**9.57 W/kg ± 17.0 % (k=2)**

SAR averaged over 10 cm³ (10 g) of Head TSL	condition	
SAR measured	250 mW input power	1.57 W/kg
SAR for nominal Head TSL parameters	normalized to 1W	**6.22 W/kg ± 16.5 % (k=2)**

Unless otherwise stated the results shown in this test report refer only to the sample(s) tested and such sample(s) are retained for 90 days only.
除非另有說明，此報告結果僅對測試之樣品負責，同時此樣品僅保留90天。本報告未經本公司書面許可，不可部份複製。
This document is issued by the Company subject to its General Conditions of Service printed overleaf, available on request or accessible at www.sgs.com/terms_and_conditions.htm and for electronic format documents, subject to Terms and Conditions for Electronic Documents at www.sgs.com/terms_e-document.htm. Attention is drawn to the limitation of liability, indemnification and jurisdiction issues defined therein. Any holder of this document is advised that information contained hereon reflects the Company's findings at the time of its intervention only and within the limits of Client's instructions, if any. The Company's sole responsibility is to its Client and this document does not exonerate parties to a transaction from exercising all their rights and obligations under the transaction documents. This document cannot be reproduced except in full, without prior written approval of the Company. Any unauthorized alteration, forgery or falsification of the content or appearance of this document is unlawful and offenders may be prosecuted to the fullest extent of the law.

SGS Taiwan Ltd. 台灣檢驗科技股份有限公司
No.134,Wu Kung Road, New Taipei Industrial Park, Wuku District, New Taipei City, Taiwan 24803/新北市五股區新北產業園區五工路 134 號
t (886-2) 2299-3279 f (886-2) 2298-0488 www.tw.sgs.com
Member of SGS Group

Appendix (Additional assessments outside the scope of SCS 0108)

Antenna Parameters with Head TSL

Impedance, transformed to feed point	50.6 Ω - 2.2 jΩ
Return Loss	- 32.8 dB

General Antenna Parameters and Design

Electrical Delay (one direction)	1.391 ns

After long term use with 100W radiated power, only a slight warming of the dipole near the feedpoint can be measured.

The dipole is made of standard semirigid coaxial cable. The center conductor of the feeding line is directly connected to the second arm of the dipole. The antenna is therefore short-circuited for DC-signals. On some of the dipoles, small end caps are added to the dipole arms in order to improve matching when loaded according to the position as explained in the "Measurement Conditions" paragraph. The SAR data are not affected by this change. The overall dipole length is still according to the Standard.
No excessive force must be applied to the dipole arms, because they might bend or the soldered connections near the feedpoint may be damaged.

Additional EUT Data

Manufactured by	SPEAG

Unless otherwise stated the results shown in this test report refer only to the sample(s) tested and such sample(s) are retained for 90 days only.
除非另有說明，此報告結果僅對測試之樣品負責，同時此樣品僅保留90天。本報告未經本公司書面許可，不可部份複製。
This document is issued by the Company subject to its General Conditions of Service printed overleaf, available on request or accessible at www.sgs.com/terms_and_conditions.htm and for electronic format documents, subject to Terms and Conditions for Electronic Documents at www.sgs.com/terms_e-document.htm. Attention is drawn to the limitation of liability, indemnification and jurisdiction issues defined therein. Any holder of this document is advised that information contained hereon reflects the Company's findings at the time of its intervention only and within the limits of Client's instructions, if any. The Company's sole responsibility is to its Client and this document does not exonerate parties to a transaction from exercising all their rights and obligations under the transaction documents. This document cannot be reproduced except in full, without prior written approval of the Company. Any unauthorized alteration, forgery or falsification of the content or appearance of this document is unlawful and offenders may be prosecuted to the fullest extent of the law.

SGS Taiwan Ltd. 台灣檢驗科技股份有限公司
No.134,Wu Kung Road, New Taipei Industrial Park, Wuku District, New Taipei City, Taiwan 24803/新北市五股區新北產業園區五工路 134 號
t (886-2) 2299-3279 f (886-2) 2298-0488 www.tw.sgs.com
Member of SGS Group

DASY5 Validation Report for Head TSL

Date: 23.08.2019

Test Laboratory: SPEAG, Zurich, Switzerland

DUT: Dipole 835 MHz; Type: D835V2; Serial: D835V2 - SN: 4d063

Communication System: UID 0 - CW; Frequency: 835 MHz
Medium parameters used: f = 835 MHz; σ = 0.92 S/m; ε_r = 42.5; ρ = 1000 kg/m^3
Phantom section: Flat Section
Measurement Standard: DASY5 (IEEE/IEC/ANSI C63.19-2011)

DASY52 Configuration:

- Probe: EX3DV4 - SN7349; ConvF(9.89, 9.89, 9.89) @ 835 MHz; Calibrated: 29.05.2019
- Sensor-Surface: 1.4mm (Mechanical Surface Detection)
- Electronics: DAE4 Sn601; Calibrated: 30.04.2019
- Phantom: Flat Phantom 4.9 (front); Type: QD 000L P49 AA; Serial: 1001
- DASY52 52.10.2(1504); SEMCAD X 14.6.12(7470)

Dipole Calibration for Head Tissue/Pin=250 mW, d=15mm/Zoom Scan (7x7x7)/Cube 0:
Measurement grid: dx=5mm, dy=5mm, dz=5mm
Reference Value = 63.04 V/m; Power Drift = -0.00 dB
Peak SAR (extrapolated) = 3.64 W/kg
SAR(1 g) = 2.42 W/kg; SAR(10 g) = 1.57 W/kg
Maximum value of SAR (measured) = 3.23 W/kg

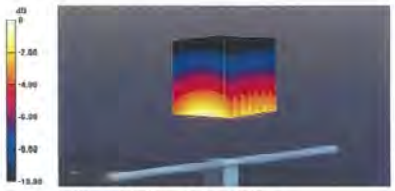

0 dB = 3.23 W/kg = 5.09 dBW/kg

Unless otherwise stated the results shown in this test report refer only to the sample(s) tested and such sample(s) are retained for 90 days only.
除非另有說明，此報告結果僅對測試之樣品負責，同時此樣品僅保留90天。本報告未經本公司書面許可，不可部份複製。
This document is issued by the Company subject to its General Conditions of Service printed overleaf, available on request or accessible at www.sgs.com/terms_and_conditions.htm and for electronic format documents, subject to Terms and Conditions for Electronic Documents at www.sgs.com/terms_e-document.htm. Attention is drawn to the limitation of liability, indemnification and jurisdiction issues defined therein. Any holder of this document is advised that information contained hereon reflects the Company's findings at the time of its intervention only and within the limits of Client's instructions, if any. The Company's sole responsibility is to its Client and this document does not exonerate parties to a transaction from exercising all their rights and obligations under the transaction documents. This document cannot be reproduced except in full, without prior written approval of the Company. Any unauthorized alteration, forgery or falsification of the content or appearance of this document is unlawful and offenders may be prosecuted to the fullest extent of the law.

SGS Taiwan Ltd. 台灣檢驗科技股份有限公司
No.134,Wu Kung Road, New Taipei Industrial Park, Wuku District, New Taipei City, Taiwan 24803/新北市五股區新北產業園區五工路 134 號
t (886-2) 2299-3279 f (886-2) 2298-0488 www.tw.sgs.com
Member of SGS Group

Impedance Measurement Plot for Head TSL

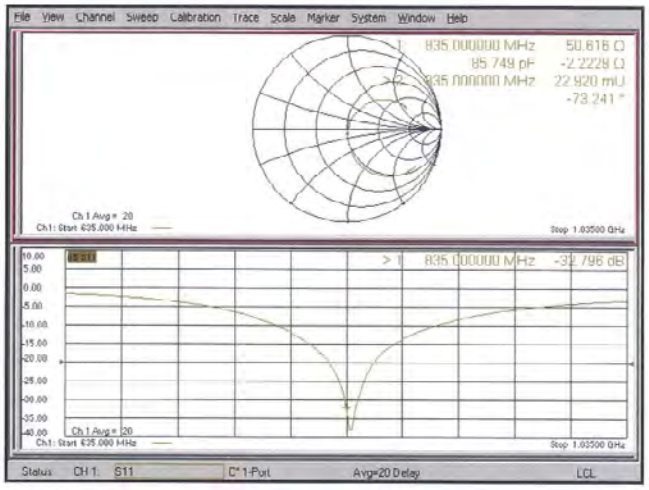

Unless otherwise stated the results shown in this test report refer only to the sample(s) tested and such sample(s) are retained for 90 days only.
除非另有說明，此報告結果僅對測試之樣品負責，同時此樣品僅保留90天。本報告未經本公司書面許可，不可部份複製。
This document is issued by the Company subject to its General Conditions of Service printed overleaf, available on request or accessible at www.sgs.com/terms_and_conditions.htm and for electronic format documents, subject to Terms and Conditions for Electronic Documents at www.sgs.com/terms_e-document.htm. Attention is drawn to the limitation of liability, indemnification and jurisdiction issues defined therein. Any holder of this document is advised that information contained hereon reflects the Company's findings at the time of its intervention only and within the limits of Client's instructions, if any. The Company's sole responsibility is to its Client and this document does not exonerate parties to a transaction from exercising all their rights and obligations under the transaction documents. This document cannot be reproduced except in full, without prior written approval of the Company. Any unauthorized alteration, forgery or falsification of the content or appearance of this document is unlawful and offenders may be prosecuted to the fullest extent of the law.

SGS Taiwan Ltd. 台灣檢驗科技股份有限公司
No.134,Wu Kung Road, New Taipei Industrial Park, Wuku District, New Taipei City, Taiwan 24803/新北市五股區新北產業園區五工路 134 號
t (886-2) 2299-3279 f (886-2) 2298-0488 www.tw.sgs.com
Member of SGS Group

Calibration Laboratory of
Schmid & Partner
Engineering AG
Zeughausstrasse 43, 8004 Zurich, Switzerland

S Schweizerischer Kalibrierdienst
C Service suisse d'étalonnage
Servizio svizzero di taratura
S Swiss Calibration Service

Accredited by the Swiss Accreditation Service (SAS)
The Swiss Accreditation Service is one of the signatories to the EA Multilateral Agreement for the recognition of calibration certificates

Accreditation No.: SCS 0108

Client **Auden**

Certificate No: D835V2-4d092_Jun19

CALIBRATION CERTIFICATE

Object	D835V2 - SN:4d092
Calibration procedure(s)	QA CAL-05.v11 Calibration Procedure for SAR Validation Sources between 0.7-3 GHz
Calibration date:	June 20, 2019

This calibration certificate documents the traceability to national standards, which realize the physical units of measurements (SI). The measurements and the uncertainties with confidence probability are given on the following pages and are part of the certificate.

All calibrations have been conducted in the closed laboratory facility: environment temperature (22 ± 3)°C and humidity < 70%.

Calibration Equipment used (M&TE critical for calibration)

Primary Standards	ID #	Cal Date (Certificate No.)	Scheduled Calibration
Power meter NRP	SN: 104778	03-Apr-19 (No. 217-02892/02893)	Apr-20
Power sensor NRP-Z91	SN: 103244	03-Apr-19 (No. 217-02892)	Apr-20
Power sensor NRP-Z91	SN: 103245	03-Apr-19 (No. 217-02893)	Apr-20
Reference 20 dB Attenuator	SN: 5058 (20k)	04-Apr-19 (No. 217-02894)	Apr-20
Type-N mismatch combination	SN: 5047.2 / 06327	04-Apr-19 (No. 217-02895)	Apr-20
Reference Probe EX3DV4	SN: 7349	29-May-19 (No. EX3-7349_May19)	May-20
DAE4	SN: 601	30-Apr-19 (No. DAE4-601_Apr19)	Apr-20

Secondary Standards	ID #	Check Date (in house)	Scheduled Check
Power meter E4419B	SN: GB39512475	30-Oct-14 (in house check Feb-19)	In house check: Oct-20
Power sensor HP 8481A	SN: US37292783	07-Oct-15 (in house check Oct-18)	In house check: Oct-20
Power sensor HP 8481A	SN: MY41092317	07-Oct-15 (in house check Oct-18)	In house check: Oct-20
RF generator R&S SMT-06	SN: 100972	15-Jun-15 (in house check Oct-18)	In house check: Oct-20
Network Analyzer Agilent E8358A	SN: US41080477	31-Mar-14 (in house check Oct-18)	In house check: Oct-19

	Name	Function	Signature
Calibrated by:	Manu Seitz	Laboratory Technician	
Approved by:	Katja Pokovic	Technical Manager	

Issued: June 24, 2019

This calibration certificate shall not be reproduced except in full without written approval of the laboratory.

Unless otherwise stated the results shown in this test report refer only to the sample(s) tested and such sample(s) are retained for 90 days only.
除非另有說明，此報告結果僅對測試之樣品負責，同時此樣品僅保留90天。本報告未經本公司書面許可，不可部份複製。
This document is issued by the Company subject to its General Conditions of Service printed overleaf, available on request or accessible at www.sgs.com/terms_and_conditions.htm and for electronic format documents, subject to Terms and Conditions for Electronic Documents at www.sgs.com/terms_e-document.htm. Attention is drawn to the limitation of liability, indemnification and jurisdiction issues defined therein. Any holder of this document is advised that information contained hereon reflects the Company's findings at the time of its intervention only and within the limits of Client's instructions, if any. The Company's sole responsibility is to its Client and this document does not exonerate parties to a transaction from exercising all their rights and obligations under the transaction documents. This document cannot be reproduced except in full, without prior written approval of the Company. Any unauthorized alteration, forgery or falsification of the content or appearance of this document is unlawful and offenders may be prosecuted to the fullest extent of the law.

Calibration Laboratory of
Schmid & Partner
Engineering AG
Zeughausstrasse 43, 8004 Zurich, Switzerland

S Schweizerischer Kalibrierdienst
C Service suisse d'étalonnage
Servizio svizzero di taratura
S Swiss Calibration Service

Accredited by the Swiss Accreditation Service (SAS)
The Swiss Accreditation Service is one of the signatories to the EA Multilateral Agreement for the recognition of calibration certificates

Accreditation No.: SCS 0108

Glossary:

TSL	tissue simulating liquid
ConvF	sensitivity in TSL / NORM x,y,z
N/A	not applicable or not measured

Calibration is Performed According to the Following Standards:

a) IEEE Std 1528-2013, "IEEE Recommended Practice for Determining the Peak Spatial-Averaged Specific Absorption Rate (SAR) in the Human Head from Wireless Communications Devices: Measurement Techniques", June 2013
b) IEC 62209-1, "Measurement procedure for the assessment of Specific Absorption Rate (SAR) from hand-held and body-mounted devices used next to the ear (frequency range of 300 MHz to 6 GHz)", July 2016
c) IEC 62209-2, "Procedure to determine the Specific Absorption Rate (SAR) for wireless communication devices used in close proximity to the human body (frequency range of 30 MHz to 6 GHz)", March 2010
d) KDB 865664, "SAR Measurement Requirements for 100 MHz to 6 GHz"

Additional Documentation:

e) DASY4/5 System Handbook

Methods Applied and Interpretation of Parameters:

- *Measurement Conditions:* Further details are available from the Validation Report at the end of the certificate. All figures stated in the certificate are valid at the frequency indicated.
- *Antenna Parameters with TSL:* The dipole is mounted with the spacer to position its feed point exactly below the center marking of the flat phantom section, with the arms oriented parallel to the body axis.
- *Feed Point Impedance and Return Loss:* These parameters are measured with the dipole positioned under the liquid filled phantom. The impedance stated is transformed from the measurement at the SMA connector to the feed point. The Return Loss ensures low reflected power. No uncertainty required.
- *Electrical Delay:* One-way delay between the SMA connector and the antenna feed point. No uncertainty required.
- *SAR measured:* SAR measured at the stated antenna input power.
- *SAR normalized:* SAR as measured, normalized to an input power of 1 W at the antenna connector.
- *SAR for nominal TSL parameters:* The measured TSL parameters are used to calculate the nominal SAR result.

The reported uncertainty of measurement is stated as the standard uncertainty of measurement multiplied by the coverage factor k=2, which for a normal distribution corresponds to a coverage probability of approximately 95%.

Unless otherwise stated the results shown in this test report refer only to the sample(s) tested and such sample(s) are retained for 90 days only.
除非另有說明，此報告結果僅對測試之樣品負責，同時此樣品僅保留90天。本報告未經本公司書面許可，不可部份複製。
This document is issued by the Company subject to its General Conditions of Service printed overleaf, available on request or accessible at www.sgs.com/terms_and_conditions.htm and for electronic format documents, subject to Terms and Conditions for Electronic Documents at www.sgs.com/terms_e-document.htm. Attention is drawn to the limitation of liability, indemnification and jurisdiction issues defined therein. Any holder of this document is advised that information contained hereon reflects the Company's findings at the time of its intervention only and within the limits of Client's instructions, if any. The Company's sole responsibility is to its Client and this document does not exonerate parties to a transaction from exercising all their rights and obligations under the transaction documents. This document cannot be reproduced except in full, without prior written approval of the Company. Any unauthorized alteration, forgery or falsification of the content or appearance of this document is unlawful and offenders may be prosecuted to the fullest extent of the law.

Measurement Conditions

DASY system configuration, as far as not given on page 1.

DASY Version	DASY5	V52.10.2
Extrapolation	Advanced Extrapolation	
Phantom	Modular Flat Phantom	
Distance Dipole Center - TSL	15 mm	with Spacer
Zoom Scan Resolution	dx, dy, dz = 5 mm	
Frequency	835 MHz ± 1 MHz	

Head TSL parameters

The following parameters and calculations were applied.

	Temperature	Permittivity	Conductivity
Nominal Head TSL parameters	22.0 °C	41.5	0.90 mho/m
Measured Head TSL parameters	(22.0 ± 0.2) °C	41.8 ± 6 %	0.91 mho/m ± 6 %
Head TSL temperature change during test	< 0.5 °C	----	----

SAR result with Head TSL

SAR averaged over 1 cm³ (1 g) of Head TSL	Condition	
SAR measured	250 mW input power	2.39 W/kg
SAR for nominal Head TSL parameters	normalized to 1W	**9.50 W/kg ± 17.0 % (k=2)**

SAR averaged over 10 cm³ (10 g) of Head TSL	condition	
SAR measured	250 mW input power	1.54 W/kg
SAR for nominal Head TSL parameters	normalized to 1W	**6.13 W/kg ± 16.5 % (k=2)**

Body TSL parameters

The following parameters and calculations were applied.

	Temperature	Permittivity	Conductivity
Nominal Body TSL parameters	22.0 °C	55.2	0.97 mho/m
Measured Body TSL parameters	(22.0 ± 0.2) °C	55.4 ± 6 %	0.98 mho/m ± 6 %
Body TSL temperature change during test	< 0.5 °C	----	----

SAR result with Body TSL

SAR averaged over 1 cm³ (1 g) of Body TSL	Condition	
SAR measured	250 mW input power	2.41 W/kg
SAR for nominal Body TSL parameters	normalized to 1W	**9.57 W/kg ± 17.0 % (k=2)**

SAR averaged over 10 cm³ (10 g) of Body TSL	condition	
SAR measured	250 mW input power	1.57 W/kg
SAR for nominal Body TSL parameters	normalized to 1W	**6.24 W/kg ± 16.5 % (k=2)**

Unless otherwise stated the results shown in this test report refer only to the sample(s) tested and such sample(s) are retained for 90 days only.
除非另有說明，此報告結果僅對測試之樣品負責，同時此樣品僅保留90天。本報告未經本公司書面許可，不可部份複製。
This document is issued by the Company subject to its General Conditions of Service printed overleaf, available on request or accessible at www.sgs.com/terms_and_conditions.htm and for electronic format documents, subject to Terms and Conditions for Electronic Documents at www.sgs.com/terms_e-document.htm. Attention is drawn to the limitation of liability, indemnification and jurisdiction issues defined therein. Any holder of this document is advised that information contained hereon reflects the Company's findings at the time of its intervention only and within the limits of Client's instructions, if any. The Company's sole responsibility is to its Client and this document does not exonerate parties to a transaction from exercising all their rights and obligations under the transaction documents. This document cannot be reproduced except in full, without prior written approval of the Company. Any unauthorized alteration, forgery or falsification of the content or appearance of this document is unlawful and offenders may be prosecuted to the fullest extent of the law.

SGS Taiwan Ltd. 台灣檢驗科技股份有限公司
No.134,Wu Kung Road, New Taipei Industrial Park, Wuku District, New Taipei City, Taiwan 24803/新北市五股區新北產業園區五工路 134 號
t (886-2) 2299-3279 f (886-2) 2298-0488 www.tw.sgs.com
Member of SGS Group

Appendix (Additional assessments outside the scope of SCS 0108)

Antenna Parameters with Head TSL

Impedance, transformed to feed point	52.2 Ω - 1.0 jΩ
Return Loss	- 32.5 dB

Antenna Parameters with Body TSL

Impedance, transformed to feed point	46.3 Ω - 7.3 jΩ
Return Loss	- 21.5 dB

General Antenna Parameters and Design

Electrical Delay (one direction)	1.397 ns

After long term use with 100W radiated power, only a slight warming of the dipole near the feedpoint can be measured.

The dipole is made of standard semirigid coaxial cable. The center conductor of the feeding line is directly connected to the second arm of the dipole. The antenna is therefore short-circuited for DC-signals. On some of the dipoles, small end caps are added to the dipole arms in order to improve matching when loaded according to the position as explained in the "Measurement Conditions" paragraph. The SAR data are not affected by this change. The overall dipole length is still according to the Standard.
No excessive force must be applied to the dipole arms, because they might bend or the soldered connections near the feedpoint may be damaged.

Additional EUT Data

Manufactured by	SPEAG

Unless otherwise stated the results shown in this test report refer only to the sample(s) tested and such sample(s) are retained for 90 days only.
除非另有說明，此報告結果僅對測試之樣品負責，同時此樣品僅保留90天。本報告未經本公司書面許可，不可部份複製。
This document is issued by the Company subject to its General Conditions of Service printed overleaf, available on request or accessible at www.sgs.com/terms_and_conditions.htm and for electronic format documents, subject to Terms and Conditions for Electronic Documents at www.sgs.com/terms_e-document.htm. Attention is drawn to the limitation of liability, indemnification and jurisdiction issues defined therein. Any holder of this document is advised that information contained hereon reflects the Company's findings at the time of its intervention only and within the limits of Client's instructions, if any. The Company's sole responsibility is to its Client and this document does not exonerate parties to a transaction from exercising all their rights and obligations under the transaction documents. This document cannot be reproduced except in full, without prior written approval of the Company. Any unauthorized alteration, forgery or falsification of the content or appearance of this document is unlawful and offenders may be prosecuted to the fullest extent of the law.
SGS Taiwan Ltd. 台灣檢驗科技股份有限公司 | No.134,Wu Kung Road, New Taipei Industrial Park, Wuku District, New Taipei City, Taiwan 24803/新北市五股區新北產業園區五工路 134 號
t (886-2) 2299-3279 f (886-2) 2298-0488 www.tw.sgs.com
Member of SGS Group

DASY5 Validation Report for Head TSL

Date: 20.06.2019

Test Laboratory: SPEAG, Zurich, Switzerland

DUT: Dipole 835 MHz; Type: D835V2; Serial: D835V2 - SN:4d092

Communication System: UID 0 - CW; Frequency: 835 MHz
Medium parameters used: f = 835 MHz; σ = 0.91 S/m; ε_r = 41.8; ρ = 1000 kg/m^3
Phantom section: Flat Section
Measurement Standard: DASY5 (IEEE/IEC/ANSI C63.19-2011)

DASY52 Configuration:

- Probe: EX3DV4 - SN7349; ConvF(9.89, 9.89, 9.89) @ 835 MHz; Calibrated: 29.05.2019
- Sensor-Surface: 1.4mm (Mechanical Surface Detection)
- Electronics: DAE4 Sn601; Calibrated: 30.04.2019
- Phantom: Flat Phantom 4.9 (front); Type: QD 00L P49 AA; Serial: 1001
- DASY52 52.10.2(1504); SEMCAD X 14.6.12(7470)

Dipole Calibration for Head Tissue/Pin=250 mW, d=15mm/Zoom Scan (7x7x7)/Cube 0:
Measurement grid: dx=5mm, dy=5mm, dz=5mm
Reference Value = 63.07 V/m; Power Drift = -0.01 dB
Peak SAR (extrapolated) = 3.60 W/kg
SAR(1 g) = 2.39 W/kg; SAR(10 g) = 1.54 W/kg
Maximum value of SAR (measured) = 3.17 W/kg

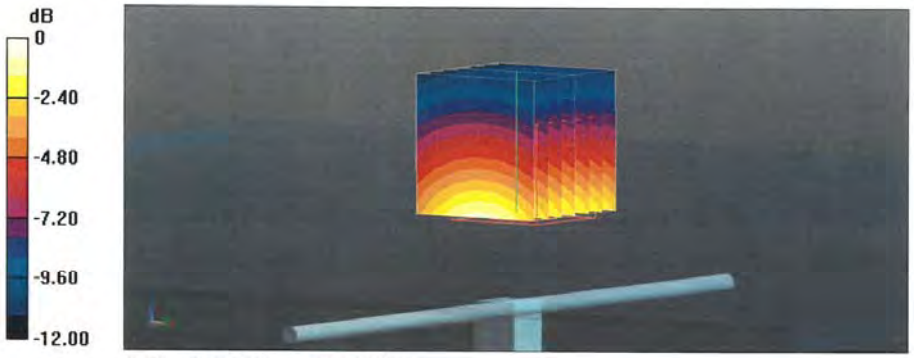

0 dB = 3.17 W/kg = 5.01 dBW/kg

Unless otherwise stated the results shown in this test report refer only to the sample(s) tested and such sample(s) are retained for 90 days only.
除非另有說明，此報告結果僅對測試之樣品負責，同時此樣品僅保留90天。本報告未經本公司書面許可，不可部份複製。
This document is issued by the Company subject to its General Conditions of Service printed overleaf, available on request or accessible at www.sgs.com/terms_and_conditions.htm and for electronic format documents, subject to Terms and Conditions for Electronic Documents at www.sgs.com/terms_e-document.htm. Attention is drawn to the limitation of liability, indemnification and jurisdiction issues defined therein. Any holder of this document is advised that information contained hereon reflects the Company's findings at the time of its intervention only and within the limits of Client's instructions, if any. The Company's sole responsibility is to its Client and this document does not exonerate parties to a transaction from exercising all their rights and obligations under the transaction documents. This document cannot be reproduced except in full, without prior written approval of the Company. Any unauthorized alteration, forgery or falsification of the content or appearance of this document is unlawful and offenders may be prosecuted to the fullest extent of the law.

SGS Taiwan Ltd. 台灣檢驗科技股份有限公司 | No.134,Wu Kung Road, New Taipei Industrial Park, Wuku District, New Taipei City, Taiwan 24803/新北市五股區新北產業園區五工路 134 號
t (886-2) 2299-3279 f (886-2) 2298-0488 www.tw.sgs.com
Member of SGS Group

Impedance Measurement Plot for Head TSL

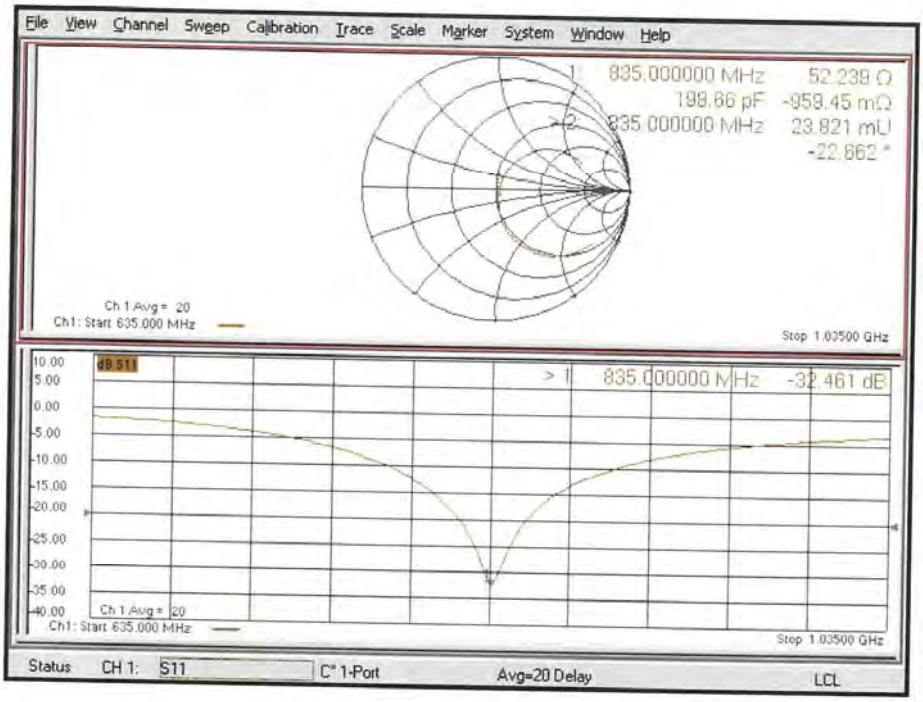

Unless otherwise stated the results shown in this test report refer only to the sample(s) tested and such sample(s) are retained for 90 days only.
除非另有說明，此報告結果僅對測試之樣品負責，同時此樣品僅保留90天。本報告未經本公司書面許可，不可部份複製。
This document is issued by the Company subject to its General Conditions of Service printed overleaf, available on request or accessible at www.sgs.com/terms_and_conditions.htm and for electronic format documents, subject to Terms and Conditions for Electronic Documents at www.sgs.com/terms_e-document.htm. Attention is drawn to the limitation of liability, indemnification and jurisdiction issues defined therein. Any holder of this document is advised that information contained hereon reflects the Company's findings at the time of its intervention only and within the limits of Client's instructions, if any. The Company's sole responsibility is to its Client and this document does not exonerate parties to a transaction from exercising all their rights and obligations under the transaction documents. This document cannot be reproduced except in full, without prior written approval of the Company. Any unauthorized alteration, forgery or falsification of the content or appearance of this document is unlawful and offenders may be prosecuted to the fullest extent of the law.

SGS Taiwan Ltd. 台灣檢驗科技股份有限公司
No.134,Wu Kung Road, New Taipei Industrial Park, Wuku District, New Taipei City, Taiwan 24803/新北市五股區新北產業園區五工路 134 號
t (886-2) 2299-3279 f (886-2) 2298-0488 www.tw.sgs.com
Member of SGS Group

DASY5 Validation Report for Body TSL

Date: 19.06.2019

Test Laboratory: SPEAG, Zurich, Switzerland

DUT: Dipole 835 MHz; Type: D835V2; Serial: D835V2 - SN:4d092

Communication System: UID 0 - CW; Frequency: 835 MHz
Medium parameters used: f = 835 MHz; σ = 0.98 S/m; ε_r = 55.4; ρ = 1000 kg/m^3
Phantom section: Flat Section
Measurement Standard: DASY5 (IEEE/IEC/ANSI C63.19-2011)

DASY52 Configuration:

- Probe: EX3DV4 - SN7349; ConvF(10.16, 10.16, 10.16) @ 835 MHz; Calibrated: 29.05.2019
- Sensor-Surface: 1.4mm (Mechanical Surface Detection)
- Electronics: DAE4 Sn601; Calibrated: 30.04.2019
- Phantom: Flat Phantom 4.9 (Back); Type: QD 00R P49 AA; Serial: 1005
- DASY52 52.10.2(1504); SEMCAD X 14.6.12(7470)

Dipole Calibration for Body Tissue/Pin=250 mW, d=15mm/Zoom Scan (7x7x7)/Cube 0:
Measurement grid: dx=5mm, dy=5mm, dz=5mm
Reference Value = 58.23 V/m; Power Drift = -0.01 dB
Peak SAR (extrapolated) = 3.61 W/kg
SAR(1 g) = 2.41 W/kg; SAR(10 g) = 1.57 W/kg
Maximum value of SAR (measured) = 3.21 W/kg

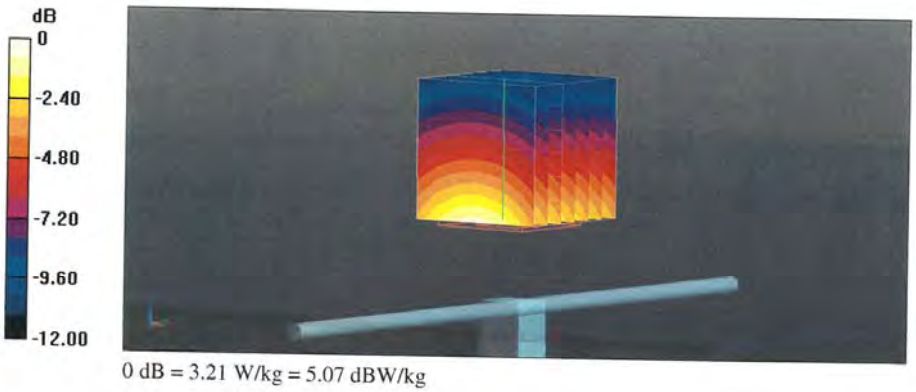

0 dB = 3.21 W/kg = 5.07 dBW/kg

Unless otherwise stated the results shown in this test report refer only to the sample(s) tested and such sample(s) are retained for 90 days only.
除非另有說明，此報告結果僅對測試之樣品負責，同時此樣品僅保留90天。本報告未經本公司書面許可，不可部份複製。
This document is issued by the Company subject to its General Conditions of Service printed overleaf, available on request or accessible at www.sgs.com/terms_and_conditions.htm and for electronic format documents, subject to Terms and Conditions for Electronic Documents at www.sgs.com/terms_e-document.htm. Attention is drawn to the limitation of liability, indemnification and jurisdiction issues defined therein. Any holder of this document is advised that information contained hereon reflects the Company's findings at the time of its intervention only and within the limits of Client's instructions, if any. The Company's sole responsibility is to its Client and this document does not exonerate parties to a transaction from exercising all their rights and obligations under the transaction documents. This document cannot be reproduced except in full, without prior written approval of the Company. Any unauthorized alteration, forgery or falsification of the content or appearance of this document is unlawful and offenders may be prosecuted to the fullest extent of the law.

SGS Taiwan Ltd. 台灣檢驗科技股份有限公司
No.134,Wu Kung Road, New Taipei Industrial Park, Wuku District, New Taipei City, Taiwan 24803/新北市五股區新北產業園區五工路 134 號
t (886-2) 2299-3279 f (886-2) 2298-0488 www.tw.sgs.com
Member of SGS Group

Impedance Measurement Plot for Body TSL

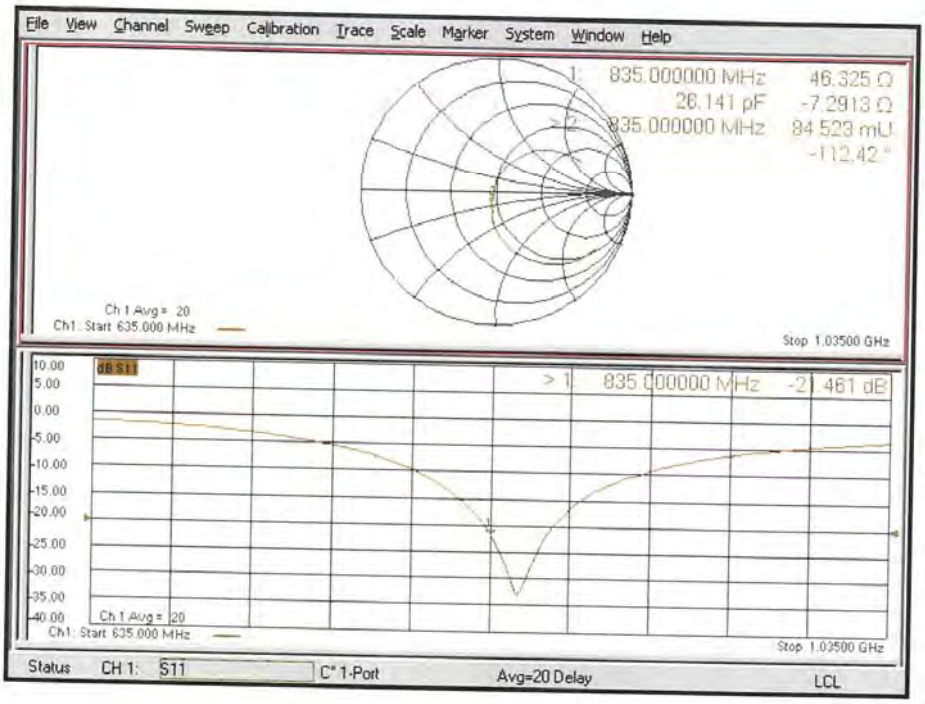

Unless otherwise stated the results shown in this test report refer only to the sample(s) tested and such sample(s) are retained for 90 days only.
除非另有說明，此報告結果僅對測試之樣品負責，同時此樣品僅保留90天。本報告未經本公司書面許可，不可部份複製。
This document is issued by the Company subject to its General Conditions of Service printed overleaf, available on request or accessible at www.sgs.com/terms_and_conditions.htm and for electronic format documents, subject to Terms and Conditions for Electronic Documents at www.sgs.com/terms_e-document.htm. Attention is drawn to the limitation of liability, indemnification and jurisdiction issues defined therein. Any holder of this document is advised that information contained hereon reflects the Company's findings at the time of its intervention only and within the limits of Client's instructions, if any. The Company's sole responsibility is to its Client and this document does not exonerate parties to a transaction from exercising all their rights and obligations under the transaction documents. This document cannot be reproduced except in full, without prior written approval of the Company. Any unauthorized alteration, forgery or falsification of the content or appearance of this document is unlawful and offenders may be prosecuted to the fullest extent of the law.

SGS Taiwan Ltd. 台灣檢驗科技股份有限公司
No.134,Wu Kung Road, New Taipei Industrial Park, Wuku District, New Taipei City, Taiwan 24803/新北市五股區新北產業園區五工路 134 號
t (886-2) 2299-3279 f (886-2) 2298-0488 www.tw.sgs.com
Member of SGS Group

Calibration Laboratory of
Schmid & Partner
Engineering AG
Zeughausstrasse 43, 8004 Zurich, Switzerland

S Schweizerischer Kalibrierdienst
C Service suisse d'étalonnage
S Servizio svizzero di taratura
Swiss Calibration Service

Accredited by the Swiss Accreditation Service (SAS)
The Swiss Accreditation Service is one of the signatories to the EA Multilateral Agreement for the recognition of calibration certificates

Accreditation No.: SCS 0108

Client SGS-TW (Auden)

Certificate No: D1750V2-1008_Aug19

CALIBRATION CERTIFICATE

Object	D1750V2 - SN:1008
Calibration procedure(s)	QA CAL-05.v11 Calibration Procedure for SAR Validation Sources between 0.7-3 GHz
Calibration date:	August 23, 2019

This calibration certificate documents the traceability to national standards, which realize the physical units of measurements (SI). The measurements and the uncertainties with confidence probability are given on the following pages and are part of the certificate.

All calibrations have been conducted in the closed laboratory facility: environment temperature (22 ± 3)°C and humidity < 70%.

Calibration Equipment used (M&TE critical for calibration)

Primary Standards	ID #	Cal Date (Certificate No.)	Scheduled Calibration
Power meter NRP	SN: 104778	03-Apr-19 (No. 217-02892/02893)	Apr-20
Power sensor NRP-Z91	SN: 103244	03-Apr-19 (No. 217-02892)	Apr-20
Power sensor NRP-Z91	SN: 103245	03-Apr-19 (No. 217-02893)	Apr-20
Reference 20 dB Attenuator	SN: 5058 (20k)	04-Apr-19 (No. 217-02894)	Apr-20
Type N mismatch combination	SN: 5047.2 / 06327	04-Apr-19 (No. 217-02895)	Apr-20
Reference Probe EX3DV4	SN: 7349	29-May-19 (No. EX3-7349_May19)	May-20
DAE4	SN: 601	30-Apr-19 (No. DAE4-601_Apr19)	Apr-20

Secondary Standards	ID #	Check Date (in house)	Scheduled Check
Power meter E4419B	SN: GB39512475	30-Oct-14 (in house check Feb-19)	In house check: Oct-20
Power sensor HP 8481A	SN: US37292783	07-Oct-15 (in house check Oct-18)	In house check: Oct-20
Power sensor HP 8481A	SN: MY41092317	07-Oct-15 (in house check Oct-18)	In house check: Oct-20
RF generator R&S SMT-06	SN: 100972	15-Jun-15 (in house check Oct-18)	In house check: Oct-20
Network Analyzer Agilent E8358A	SN: US41080477	31-Mar-14 (in house check Oct-18)	In house check: Oct-19

	Name	Function	Signature
Calibrated by:	Jelon Kastrati	Laboratory Technician	
Approved by:	Katja Pokovic	Technical Manager	

Issued: August 23, 2019

This calibration certificate shall not be reproduced except in full without written approval of the laboratory.

Certificate No: D1750V2-1008_Aug19 Page 1 of 6

Unless otherwise stated the results shown in this test report refer only to the sample(s) tested and such sample(s) are retained for 90 days only.
除非另有說明，此報告結果僅對測試之樣品負責，同時此樣品僅保留90天。本報告未經本公司書面許可，不可部份複製。
This document is issued by the Company subject to its General Conditions of Service printed overleaf, available on request or accessible at www.sgs.com/terms_and_conditions.htm and for electronic format documents, subject to Terms and Conditions for Electronic Documents at www.sgs.com/terms_e-document.htm. Attention is drawn to the limitation of liability, indemnification and jurisdiction issues defined therein. Any holder of this document is advised that information contained hereon reflects the Company's findings at the time of its intervention only and within the limits of Client's instructions, if any. The Company's sole responsibility is to its Client and this document does not exonerate parties to a transaction from exercising all their rights and obligations under the transaction documents. This document cannot be reproduced except in full, without prior written approval of the Company. Any unauthorized alteration, forgery or falsification of the content or appearance of this document is unlawful and offenders may be prosecuted to the fullest extent of the law.

Calibration Laboratory of
Schmid & Partner
Engineering AG
Zeughausstrasse 43, 8004 Zurich, Switzerland

S Schweizerischer Kalibrierdienst
C Service suisse d'étalonnage
S Servizio svizzero di taratura
Swiss Calibration Service

Accredited by the Swiss Accreditation Service (SAS)
The Swiss Accreditation Service is one of the signatories to the EA Multilateral Agreement for the recognition of calibration certificates

Accreditation No.: SCS 0108

Glossary:

TSL	tissue simulating liquid
ConvF	sensitivity in TSL / NORM x,y,z
N/A	not applicable or not measured

Calibration is Performed According to the Following Standards:

a) IEEE Std 1528-2013, "IEEE Recommended Practice for Determining the Peak Spatial-Averaged Specific Absorption Rate (SAR) in the Human Head from Wireless Communications Devices: Measurement Techniques", June 2013
b) IEC 62209-1, "Measurement procedure for the assessment of Specific Absorption Rate (SAR) from hand-held and body-mounted devices used next to the ear (frequency range of 300 MHz to 6 GHz)", July 2016
c) IEC 62209-2, "Procedure to determine the Specific Absorption Rate (SAR) for wireless communication devices used in close proximity to the human body (frequency range of 30 MHz to 6 GHz)", March 2010
d) KDB 865664, "SAR Measurement Requirements for 100 MHz to 6 GHz"

Additional Documentation:

e) DASY4/5 System Handbook

Methods Applied and Interpretation of Parameters:

- *Measurement Conditions:* Further details are available from the Validation Report at the end of the certificate. All figures stated in the certificate are valid at the frequency indicated.
- *Antenna Parameters with TSL:* The dipole is mounted with the spacer to position its feed point exactly below the center marking of the flat phantom section, with the arms oriented parallel to the body axis.
- *Feed Point Impedance and Return Loss:* These parameters are measured with the dipole positioned under the liquid filled phantom. The impedance stated is transformed from the measurement at the SMA connector to the feed point. The Return Loss ensures low reflected power. No uncertainty required.
- *Electrical Delay:* One-way delay between the SMA connector and the antenna feed point. No uncertainty required.
- *SAR measured:* SAR measured at the stated antenna input power.
- *SAR normalized:* SAR as measured, normalized to an input power of 1 W at the antenna connector.
- *SAR for nominal TSL parameters:* The measured TSL parameters are used to calculate the nominal SAR result.

The reported uncertainty of measurement is stated as the standard uncertainty of measurement multiplied by the coverage factor k=2, which for a normal distribution corresponds to a coverage probability of approximately 95%.

Certificate No: D1750V2-1008_Aug19 Page 2 of 6

Unless otherwise stated the results shown in this test report refer only to the sample(s) tested and such sample(s) are retained for 90 days only.
除非另有說明，此報告結果僅對測試之樣品負責，同時此樣品僅保留90天。本報告未經本公司書面許可，不可部份複製。
This document is issued by the Company subject to its General Conditions of Service printed overleaf, available on request or accessible at www.sgs.com/terms_and_conditions.htm and for electronic format documents, subject to Terms and Conditions for Electronic Documents at www.sgs.com/terms_e-document.htm. Attention is drawn to the limitation of liability, indemnification and jurisdiction issues defined therein. Any holder of this document is advised that information contained hereon reflects the Company's findings at the time of its intervention only and within the limits of Client's instructions, if any. The Company's sole responsibility is to its Client and this document does not exonerate parties to a transaction from exercising all their rights and obligations under the transaction documents. This document cannot be reproduced except in full, without prior written approval of the Company. Any unauthorized alteration, forgery or falsification of the content or appearance of this document is unlawful and offenders may be prosecuted to the fullest extent of the law.

Measurement Conditions

DASY system configuration, as far as not given on page 1.

DASY Version	DASY5	V52.10.2
Extrapolation	Advanced Extrapolation	
Phantom	Modular Flat Phantom	
Distance Dipole Center - TSL	10 mm	with Spacer
Zoom Scan Resolution	dx, dy, dz = 5 mm	
Frequency	1750 MHz ± 1 MHz	

Head TSL parameters

The following parameters and calculations were applied.

	Temperature	**Permittivity**	**Conductivity**
Nominal Head TSL parameters	22.0 °C	40.1	1.37 mho/m
Measured Head TSL parameters	(22.0 ± 0.2) °C	40.8 ± 6 %	1.36 mho/m ± 6 %
Head TSL temperature change during test	< 0.5 °C	----	----

SAR result with Head TSL

SAR averaged over 1 cm³ (1 g) of Head TSL	Condition	
SAR measured	250 mW input power	9.13 W/kg
SAR for nominal Head TSL parameters	normalized to 1W	**36.8 W/kg ± 17.0 % (k=2)**

SAR averaged over 10 cm³ (10 g) of Head TSL	condition	
SAR measured	250 mW input power	4.83 W/kg
SAR for nominal Head TSL parameters	normalized to 1W	**19.4 W/kg ± 16.5 % (k=2)**

Unless otherwise stated the results shown in this test report refer only to the sample(s) tested and such sample(s) are retained for 90 days only.
除非另有說明，此報告結果僅對測試之樣品負責，同時此樣品僅保留90天。本報告未經本公司書面許可，不可部份複製。
This document is issued by the Company subject to its General Conditions of Service printed overleaf, available on request or accessible at www.sgs.com/terms_and_conditions.htm and for electronic format documents, subject to Terms and Conditions for Electronic Documents at www.sgs.com/terms_e-document.htm. Attention is drawn to the limitation of liability, indemnification and jurisdiction issues defined therein. Any holder of this document is advised that information contained hereon reflects the Company's findings at the time of its intervention only and within the limits of Client's instructions, if any. The Company's sole responsibility is to its Client and this document does not exonerate parties to a transaction from exercising all their rights and obligations under the transaction documents. This document cannot be reproduced except in full, without prior written approval of the Company. Any unauthorized alteration, forgery or falsification of the content or appearance of this document is unlawful and offenders may be prosecuted to the fullest extent of the law.

SGS Taiwan Ltd. 台灣檢驗科技股份有限公司
No.134,Wu Kung Road, New Taipei Industrial Park, Wuku District, New Taipei City, Taiwan 24803/新北市五股區新北產業園區五工路 134 號
t (886-2) 2299-3279 f (886-2) 2298-0488 www.tw.sgs.com
Member of SGS Group

Appendix (Additional assessments outside the scope of SCS 0108)

Antenna Parameters with Head TSL

Impedance, transformed to feed point	49.0 Ω + 0.6 jΩ
Return Loss	- 38.5 dB

General Antenna Parameters and Design

Electrical Delay (one direction)	1.222 ns

After long term use with 100W radiated power, only a slight warming of the dipole near the feedpoint can be measured.

The dipole is made of standard semirigid coaxial cable. The center conductor of the feeding line is directly connected to the second arm of the dipole. The antenna is therefore short-circuited for DC-signals. On some of the dipoles, small end caps are added to the dipole arms in order to improve matching when loaded according to the position as explained in the "Measurement Conditions" paragraph. The SAR data are not affected by this change. The overall dipole length is still according to the Standard.
No excessive force must be applied to the dipole arms, because they might bend or the soldered connections near the feedpoint may be damaged.

Additional EUT Data

Manufactured by	SPEAG

Unless otherwise stated the results shown in this test report refer only to the sample(s) tested and such sample(s) are retained for 90 days only.
除非另有說明，此報告結果僅對測試之樣品負責，同時此樣品僅保留90天。本報告未經本公司書面許可，不可部份複製。
This document is issued by the Company subject to its General Conditions of Service printed overleaf, available on request or accessible at www.sgs.com/terms_and_conditions.htm and for electronic format documents, subject to Terms and Conditions for Electronic Documents at www.sgs.com/terms_e-document.htm. Attention is drawn to the limitation of liability, indemnification and jurisdiction issues defined therein. Any holder of this document is advised that information contained hereon reflects the Company's findings at the time of its intervention only and within the limits of Client's instructions, if any. The Company's sole responsibility is to its Client and this document does not exonerate parties to a transaction from exercising all their rights and obligations under the transaction documents. This document cannot be reproduced except in full, without prior written approval of the Company. Any unauthorized alteration, forgery or falsification of the content or appearance of this document is unlawful and offenders may be prosecuted to the fullest extent of the law.

SGS Taiwan Ltd. 台灣檢驗科技股份有限公司
No.134,Wu Kung Road, New Taipei Industrial Park, Wuku District, New Taipei City, Taiwan 24803/新北市五股區新北產業園區五工路 134 號
t (886-2) 2299-3279 f (886-2) 2298-0488 www.tw.sgs.com
Member of SGS Group

DASY5 Validation Report for Head TSL

Date: 23.08.2019

Test Laboratory: SPEAG, Zurich, Switzerland

DUT: Dipole 1750 MHz; Type: D1750V2; Serial: D1750V2 - SN:1008

Communication System: UID 0 - CW; Frequency: 1750 MHz
Medium parameters used: f = 1750 MHz; σ = 1.36 S/m; ε_r = 40.8; ρ = 1000 kg/m^3
Phantom section: Flat Section
Measurement Standard: DASY5 (IEEE/IEC/ANSI C63.19-2011)

DASY52 Configuration:

- Probe: EX3DV4 - SN7349; ConvF(8.67, 8.67, 8.67) @ 1750 MHz; Calibrated: 29.05.2019
- Sensor-Surface: 1.4mm (Mechanical Surface Detection)
- Electronics: DAE4 Sn601; Calibrated: 30.04.2019
- Phantom: Flat Phantom 5.0 (front); Type: QD 000 P50 AA; Serial: 1001
- DASY52 52.10.2(1504); SEMCAD X 14.6.12(7470)

Dipole Calibration for Head Tissue/Pin=250 mW, d=10mm/Zoom Scan (7x7x7)/Cube 0:
Measurement grid: dx=5mm, dy=5mm, dz=5mm
Reference Value = 106.5 V/m; Power Drift = -0.01 dB
Peak SAR (extrapolated) = 17.0 W/kg
SAR(1 g) = 9.13 W/kg; SAR(10 g) = 4.83 W/kg
Maximum value of SAR (measured) = 14.3 W/kg

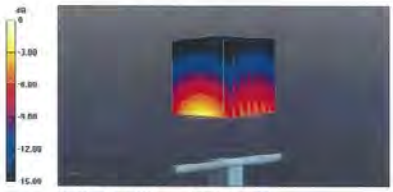

0 dB = 14.3 W/kg = 11.55 dBW/kg

Unless otherwise stated the results shown in this test report refer only to the sample(s) tested and such sample(s) are retained for 90 days only.
除非另有說明，此報告結果僅對測試之樣品負責，同時此樣品僅保留90天。本報告未經本公司書面許可，不可部份複製。
This document is issued by the Company subject to its General Conditions of Service printed overleaf, available on request or accessible at www.sgs.com/terms_and_conditions.htm and for electronic format documents, subject to Terms and Conditions for Electronic Documents at www.sgs.com/terms_e-document.htm. Attention is drawn to the limitation of liability, indemnification and jurisdiction issues defined therein. Any holder of this document is advised that information contained hereon reflects the Company's findings at the time of its intervention only and within the limits of Client's instructions, if any. The Company's sole responsibility is to its Client and this document does not exonerate parties to a transaction from exercising all their rights and obligations under the transaction documents. This document cannot be reproduced except in full, without prior written approval of the Company. Any unauthorized alteration, forgery or falsification of the content or appearance of this document is unlawful and offenders may be prosecuted to the fullest extent of the law.

SGS Taiwan Ltd. 台灣檢驗科技股份有限公司
No.134,Wu Kung Road, New Taipei Industrial Park, Wuku District, New Taipei City, Taiwan 24803/新北市五股區新北產業園區五工路 134 號
t (886-2) 2299-3279 f (886-2) 2298-0488 www.tw.sgs.com
Member of SGS Group

Impedance Measurement Plot for Head TSL

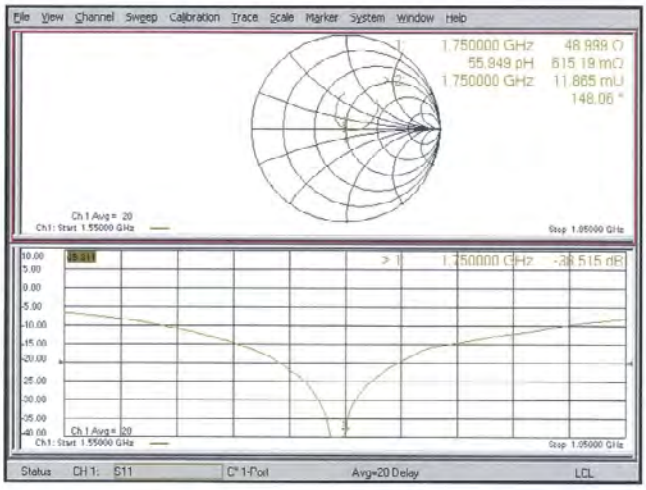

Unless otherwise stated the results shown in this test report refer only to the sample(s) tested and such sample(s) are retained for 90 days only.
除非另有說明，此報告結果僅對測試之樣品負責，同時此樣品僅保留90天。本報告未經本公司書面許可，不可部份複製。
This document is issued by the Company subject to its General Conditions of Service printed overleaf, available on request or accessible at www.sgs.com/terms_and_conditions.htm and for electronic format documents, subject to Terms and Conditions for Electronic Documents at www.sgs.com/terms_e-document.htm. Attention is drawn to the limitation of liability, indemnification and jurisdiction issues defined therein. Any holder of this document is advised that information contained hereon reflects the Company's findings at the time of its intervention only and within the limits of Client's instructions, if any. The Company's sole responsibility is to its Client and this document does not exonerate parties to a transaction from exercising all their rights and obligations under the transaction documents. This document cannot be reproduced except in full, without prior written approval of the Company. Any unauthorized alteration, forgery or falsification of the content or appearance of this document is unlawful and offenders may be prosecuted to the fullest extent of the law.

SGS Taiwan Ltd. 台灣檢驗科技股份有限公司
No.134,Wu Kung Road, New Taipei Industrial Park, Wuku District, New Taipei City, Taiwan 24803/新北市五股區新北產業園區五工路 134 號
t (886-2) 2299-3279 f (886-2) 2298-0488 www.tw.sgs.com
Member of SGS Group

Calibration Laboratory of
Schmid & Partner
Engineering AG
Zeughausstrasse 43, 8004 Zurich, Switzerland

S Schweizerischer Kalibrierdienst
C Service suisse d'étalonnage
Servizio svizzero di taratura
S Swiss Calibration Service

Accredited by the Swiss Accreditation Service (SAS)
The Swiss Accreditation Service is one of the signatories to the EA Multilateral Agreement for the recognition of calibration certificates

Accreditation No.: SCS 0108

Client **Auden**

Certificate No: D1750V2-1023_Jun19

CALIBRATION CERTIFICATE

Object	D1750V2 - SN:1023
Calibration procedure(s)	QA CAL-05.v11 Calibration Procedure for SAR Validation Sources between 0.7-3 GHz
Calibration date:	June 20, 2019

This calibration certificate documents the traceability to national standards, which realize the physical units of measurements (SI).
The measurements and the uncertainties with confidence probability are given on the following pages and are part of the certificate.

All calibrations have been conducted in the closed laboratory facility: environment temperature (22 ± 3)°C and humidity < 70%.

Calibration Equipment used (M&TE critical for calibration)

Primary Standards	ID #	Cal Date (Certificate No.)	Scheduled Calibration
Power meter NRP	SN: 104778	03-Apr-19 (No. 217-02892/02893)	Apr-20
Power sensor NRP-Z91	SN: 103244	03-Apr-19 (No. 217-02892)	Apr-20
Power sensor NRP-Z91	SN: 103245	03-Apr-19 (No. 217-02893)	Apr-20
Reference 20 dB Attenuator	SN: 5058 (20k)	04-Apr-19 (No. 217-02894)	Apr-20
Type-N mismatch combination	SN: 5047.2 / 06327	04-Apr-19 (No. 217-02895)	Apr-20
Reference Probe EX3DV4	SN: 7349	29-May-19 (No. EX3-7349_May19)	May-20
DAE4	SN: 601	30-Apr-19 (No. DAE4-601_Apr19)	Apr-20
Secondary Standards	**ID #**	**Check Date (in house)**	**Scheduled Check**
Power meter E4419B	SN: GB39512475	30-Oct-14 (in house check Feb-19)	In house check: Oct-20
Power sensor HP 8481A	SN: US37292783	07-Oct-15 (in house check Oct-18)	In house check: Oct-20
Power sensor HP 8481A	SN: MY41092317	07-Oct-15 (in house check Oct-18)	In house check: Oct-20
RF generator R&S SMT-06	SN: 100972	15-Jun-15 (in house check Oct-18)	In house check: Oct-20
Network Analyzer Agilent E8358A	SN: US41080477	31-Mar-14 (in house check Oct-18)	In house check: Oct-19

	Name	Function	Signature
Calibrated by:	Claudio Leubler	Laboratory Technician	
Approved by:	Katja Pokovic	Technical Manager	

Issued: June 20, 2019

This calibration certificate shall not be reproduced except in full without written approval of the laboratory.

Unless otherwise stated the results shown in this test report refer only to the sample(s) tested and such sample(s) are retained for 90 days only.
除非另有說明，此報告結果僅對測試之樣品負責，同時此樣品僅保留90天。本報告未經本公司書面許可，不可部份複製。
This document is issued by the Company subject to its General Conditions of Service printed overleaf, available on request or accessible at www.sgs.com/terms_and_conditions.htm and for electronic format documents, subject to Terms and Conditions for Electronic Documents at www.sgs.com/terms_e-document.htm. Attention is drawn to the limitation of liability, indemnification and jurisdiction issues defined therein. Any holder of this document is advised that information contained hereon reflects the Company's findings at the time of its intervention only and within the limits of Client's instructions, if any. The Company's sole responsibility is to its Client and this document does not exonerate parties to a transaction from exercising all their rights and obligations under the transaction documents. This document cannot be reproduced except in full, without prior written approval of the Company. Any unauthorized alteration, forgery or falsification of the content or appearance of this document is unlawful and offenders may be prosecuted to the fullest extent of the law.

SGS Taiwan Ltd. 台灣檢驗科技股份有限公司
No.134,Wu Kung Road, New Taipei Industrial Park, Wuku District, New Taipei City, Taiwan 24803/新北市五股區新北產業園區五工路 134 號
t (886-2) 2299-3279 f (886-2) 2298-0488 www.tw.sgs.com
Member of SGS Group

Calibration Laboratory of
Schmid & Partner
Engineering AG
Zeughausstrasse 43, 8004 Zurich, Switzerland

S Schweizerischer Kalibrierdienst
C Service suisse d'étalonnage
Servizio svizzero di taratura
S Swiss Calibration Service

Accredited by the Swiss Accreditation Service (SAS)
The Swiss Accreditation Service is one of the signatories to the EA Multilateral Agreement for the recognition of calibration certificates

Accreditation No.: **SCS 0108**

Glossary:

TSL	tissue simulating liquid
ConvF	sensitivity in TSL / NORM x,y,z
N/A	not applicable or not measured

Calibration is Performed According to the Following Standards:

a) IEEE Std 1528-2013, "IEEE Recommended Practice for Determining the Peak Spatial-Averaged Specific Absorption Rate (SAR) in the Human Head from Wireless Communications Devices: Measurement Techniques", June 2013
b) IEC 62209-1, "Measurement procedure for the assessment of Specific Absorption Rate (SAR) from hand-held and body-mounted devices used next to the ear (frequency range of 300 MHz to 6 GHz)", July 2016
c) IEC 62209-2, "Procedure to determine the Specific Absorption Rate (SAR) for wireless communication devices used in close proximity to the human body (frequency range of 30 MHz to 6 GHz)", March 2010
d) KDB 865664, "SAR Measurement Requirements for 100 MHz to 6 GHz"

Additional Documentation:

e) DASY4/5 System Handbook

Methods Applied and Interpretation of Parameters:

- *Measurement Conditions:* Further details are available from the Validation Report at the end of the certificate. All figures stated in the certificate are valid at the frequency indicated.
- *Antenna Parameters with TSL:* The dipole is mounted with the spacer to position its feed point exactly below the center marking of the flat phantom section, with the arms oriented parallel to the body axis.
- *Feed Point Impedance and Return Loss:* These parameters are measured with the dipole positioned under the liquid filled phantom. The impedance stated is transformed from the measurement at the SMA connector to the feed point. The Return Loss ensures low reflected power. No uncertainty required.
- *Electrical Delay:* One-way delay between the SMA connector and the antenna feed point. No uncertainty required.
- *SAR measured:* SAR measured at the stated antenna input power.
- *SAR normalized:* SAR as measured, normalized to an input power of 1 W at the antenna connector.
- *SAR for nominal TSL parameters:* The measured TSL parameters are used to calculate the nominal SAR result.

The reported uncertainty of measurement is stated as the standard uncertainty of measurement multiplied by the coverage factor k=2, which for a normal distribution corresponds to a coverage probability of approximately 95%.

Unless otherwise stated the results shown in this test report refer only to the sample(s) tested and such sample(s) are retained for 90 days only.
除非另有說明，此報告結果僅對測試之樣品負責，同時此樣品僅保留90天。本報告未經本公司書面許可，不可部份複製。
This document is issued by the Company subject to its General Conditions of Service printed overleaf, available on request or accessible at www.sgs.com/terms_and_conditions.htm and for electronic format documents, subject to Terms and Conditions for Electronic Documents at www.sgs.com/terms_e-document.htm. Attention is drawn to the limitation of liability, indemnification and jurisdiction issues defined therein. Any holder of this document is advised that information contained hereon reflects the Company's findings at the time of its intervention only and within the limits of Client's instructions, if any. The Company's sole responsibility is to its Client and this document does not exonerate parties to a transaction from exercising all their rights and obligations under the transaction documents. This document cannot be reproduced except in full, without prior written approval of the Company. Any unauthorized alteration, forgery or falsification of the content or appearance of this document is unlawful and offenders may be prosecuted to the fullest extent of the law.

Measurement Conditions

DASY system configuration, as far as not given on page 1.

DASY Version	DASY5	V52.10.2
Extrapolation	Advanced Extrapolation	
Phantom	Modular Flat Phantom	
Distance Dipole Center - TSL	10 mm	with Spacer
Zoom Scan Resolution	dx, dy, dz = 5 mm	
Frequency	1750 MHz ± 1 MHz	

Head TSL parameters

The following parameters and calculations were applied.

	Temperature	Permittivity	Conductivity
Nominal Head TSL parameters	22.0 °C	40.1	1.37 mho/m
Measured Head TSL parameters	(22.0 ± 0.2) °C	40.0 ± 6 %	1.34 mho/m ± 6 %
Head TSL temperature change during test	< 0.5 °C	----	----

SAR result with Head TSL

SAR averaged over 1 cm^3 (1 g) of Head TSL	Condition	
SAR measured	250 mW input power	8.90 W/kg
SAR for nominal Head TSL parameters	normalized to 1W	**36.1 W/kg ± 17.0 % (k=2)**

SAR averaged over 10 cm^3 (10 g) of Head TSL	condition	
SAR measured	250 mW input power	4.69 W/kg
SAR for nominal Head TSL parameters	normalized to 1W	**18.9 W/kg ± 16.5 % (k=2)**

Body TSL parameters

The following parameters and calculations were applied.

	Temperature	Permittivity	Conductivity
Nominal Body TSL parameters	22.0 °C	53.4	1.49 mho/m
Measured Body TSL parameters	(22.0 ± 0.2) °C	53.9 ± 6 %	1.46 mho/m ± 6 %
Body TSL temperature change during test	< 0.5 °C	----	----

SAR result with Body TSL

SAR averaged over 1 cm^3 (1 g) of Body TSL	Condition	
SAR measured	250 mW input power	9.23 W/kg
SAR for nominal Body TSL parameters	normalized to 1W	**37.5 W/kg ± 17.0 % (k=2)**

SAR averaged over 10 cm^3 (10 g) of Body TSL	condition	
SAR measured	250 mW input power	4.91 W/kg
SAR for nominal Body TSL parameters	normalized to 1W	**19.8 W/kg ± 16.5 % (k=2)**

Unless otherwise stated the results shown in this test report refer only to the sample(s) tested and such sample(s) are retained for 90 days only.
除非另有說明，此報告結果僅對測試之樣品負責，同時此樣品僅保留90天。本報告未經本公司書面許可，不可部份複製。
This document is issued by the Company subject to its General Conditions of Service printed overleaf, available on request or accessible at www.sgs.com/terms_and_conditions.htm and for electronic format documents, subject to Terms and Conditions for Electronic Documents at www.sgs.com/terms_e-document.htm. Attention is drawn to the limitation of liability, indemnification and jurisdiction issues defined therein. Any holder of this document is advised that information contained hereon reflects the Company's findings at the time of its intervention only and within the limits of Client's instructions, if any. The Company's sole responsibility is to its Client and this document does not exonerate parties to a transaction from exercising all their rights and obligations under the transaction documents. This document cannot be reproduced except in full, without prior written approval of the Company. Any unauthorized alteration, forgery or falsification of the content or appearance of this document is unlawful and offenders may be prosecuted to the fullest extent of the law.

SGS Taiwan Ltd. 台灣檢驗科技股份有限公司
No.134,Wu Kung Road, New Taipei Industrial Park, Wuku District, New Taipei City, Taiwan 24803/新北市五股區新北產業園區五工路 134 號
t (886-2) 2299-3279 f (886-2) 2298-0488 www.tw.sgs.com
Member of SGS Group

Appendix (Additional assessments outside the scope of SCS 0108)

Antenna Parameters with Head TSL

Impedance, transformed to feed point	50.3 Ω - 0.1 jΩ
Return Loss	- 50.0 dB

Antenna Parameters with Body TSL

Impedance, transformed to feed point	46.4 Ω - 1.0 jΩ
Return Loss	- 28.3 dB

General Antenna Parameters and Design

Electrical Delay (one direction)	1.218 ns

After long term use with 100W radiated power, only a slight warming of the dipole near the feedpoint can be measured.

The dipole is made of standard semirigid coaxial cable. The center conductor of the feeding line is directly connected to the second arm of the dipole. The antenna is therefore short-circuited for DC-signals. On some of the dipoles, small end caps are added to the dipole arms in order to improve matching when loaded according to the position as explained in the "Measurement Conditions" paragraph. The SAR data are not affected by this change. The overall dipole length is still according to the Standard.
No excessive force must be applied to the dipole arms, because they might bend or the soldered connections near the feedpoint may be damaged.

Additional EUT Data

Manufactured by	SPEAG

Unless otherwise stated the results shown in this test report refer only to the sample(s) tested and such sample(s) are retained for 90 days only.
除非另有說明，此報告結果僅對測試之樣品負責，同時此樣品僅保留90天。本報告未經本公司書面許可，不可部份複製。
This document is issued by the Company subject to its General Conditions of Service printed overleaf, available on request or accessible at www.sgs.com/terms_and_conditions.htm and for electronic format documents, subject to Terms and Conditions for Electronic Documents at www.sgs.com/terms_e-document.htm. Attention is drawn to the limitation of liability, indemnification and jurisdiction issues defined therein. Any holder of this document is advised that information contained hereon reflects the Company's findings at the time of its intervention only and within the limits of Client's instructions, if any. The Company's sole responsibility is to its Client and this document does not exonerate parties to a transaction from exercising all their rights and obligations under the transaction documents. This document cannot be reproduced except in full, without prior written approval of the Company. Any unauthorized alteration, forgery or falsification of the content or appearance of this document is unlawful and offenders may be prosecuted to the fullest extent of the law.
SGS Taiwan Ltd. 台灣檢驗科技股份有限公司 | No.134,Wu Kung Road, New Taipei Industrial Park, Wuku District, New Taipei City, Taiwan 24803/新北市五股區新北產業園區五工路 134 號
t (886-2) 2299-3279 f (886-2) 2298-0488 www.tw.sgs.com
Member of SGS Group

DASY5 Validation Report for Head TSL

Date: 19.06.2019

Test Laboratory: SPEAG, Zurich, Switzerland

DUT: Dipole 1750 MHz; Type: D1750V2; Serial: D1750V2 - SN:1023

Communication System: UID 0 - CW; Frequency: 1750 MHz
Medium parameters used: f = 1750 MHz; σ = 1.34 S/m; ε_r = 40; ρ = 1000 kg/m^3
Phantom section: Flat Section
Measurement Standard: DASY5 (IEEE/IEC/ANSI C63.19-2011)

DASY52 Configuration:

- Probe: EX3DV4 - SN7349; ConvF(8.67, 8.67, 8.67) @ 1750 MHz; Calibrated: 29.05.2019
- Sensor-Surface: 1.4mm (Mechanical Surface Detection)
- Electronics: DAE4 Sn601; Calibrated: 30.04.2019
- Phantom: Flat Phantom 5.0 (front); Type: QD 000 P50 AA; Serial: 1001
- DASY52 52.10.2(1504); SEMCAD X 14.6.12(7470)

Dipole Calibration for Head Tissue/Pin=250 mW, d=10mm/Zoom Scan (7x7x7)/Cube 0:

Measurement grid: dx=5mm, dy=5mm, dz=5mm
Reference Value = 106.5 V/m; Power Drift = -0.02 dB
Peak SAR (extrapolated) = 16.6 W/kg
SAR(1 g) = 8.9 W/kg; SAR(10 g) = 4.69 W/kg
Maximum value of SAR (measured) = 13.9 W/kg

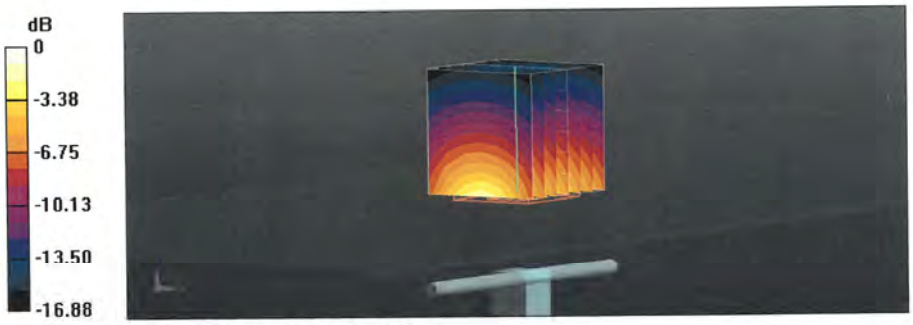

0 dB = 13.9 W/kg = 11.43 dBW/kg

Unless otherwise stated the results shown in this test report refer only to the sample(s) tested and such sample(s) are retained for 90 days only.
除非另有說明，此報告結果僅對測試之樣品負責，同時此樣品僅保留90天。本報告未經本公司書面許可，不可部份複製。
This document is issued by the Company subject to its General Conditions of Service printed overleaf, available on request or accessible at www.sgs.com/terms_and_conditions.htm and for electronic format documents, subject to Terms and Conditions for Electronic Documents at www.sgs.com/terms_e-document.htm. Attention is drawn to the limitation of liability, indemnification and jurisdiction issues defined therein. Any holder of this document is advised that information contained hereon reflects the Company's findings at the time of its intervention only and within the limits of Client's instructions, if any. The Company's sole responsibility is to its Client and this document does not exonerate parties to a transaction from exercising all their rights and obligations under the transaction documents. This document cannot be reproduced except in full, without prior written approval of the Company. Any unauthorized alteration, forgery or falsification of the content or appearance of this document is unlawful and offenders may be prosecuted to the fullest extent of the law.

SGS Taiwan Ltd. 台灣檢驗科技股份有限公司
No.134,Wu Kung Road, New Taipei Industrial Park, Wuku District, New Taipei City, Taiwan 24803/新北市五股區新北產業園區五工路 134 號
t (886-2) 2299-3279 f (886-2) 2298-0488 www.tw.sgs.com
Member of SGS Group

Impedance Measurement Plot for Head TSL

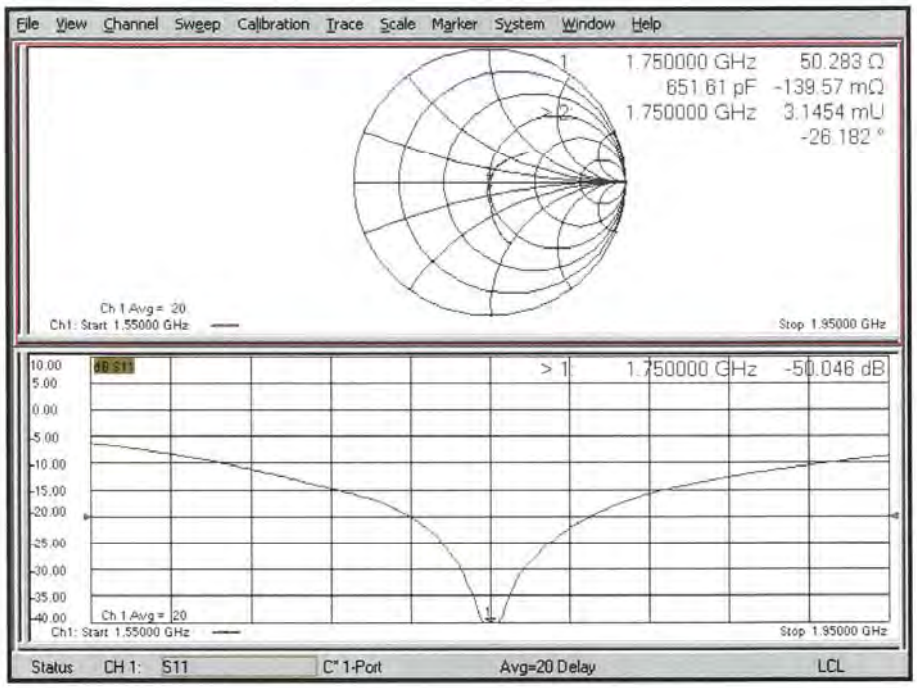

Unless otherwise stated the results shown in this test report refer only to the sample(s) tested and such sample(s) are retained for 90 days only.
除非另有說明，此報告結果僅對測試之樣品負責，同時此樣品僅保留90天。本報告未經本公司書面許可，不可部份複製。
This document is issued by the Company subject to its General Conditions of Service printed overleaf, available on request or accessible at www.sgs.com/terms_and_conditions.htm and for electronic format documents, subject to Terms and Conditions for Electronic Documents at www.sgs.com/terms_e-document.htm. Attention is drawn to the limitation of liability, indemnification and jurisdiction issues defined therein. Any holder of this document is advised that information contained hereon reflects the Company's findings at the time of its intervention only and within the limits of Client's instructions, if any. The Company's sole responsibility is to its Client and this document does not exonerate parties to a transaction from exercising all their rights and obligations under the transaction documents. This document cannot be reproduced except in full, without prior written approval of the Company. Any unauthorized alteration, forgery or falsification of the content or appearance of this document is unlawful and offenders may be prosecuted to the fullest extent of the law.

SGS Taiwan Ltd. 台灣檢驗科技股份有限公司
No.134,Wu Kung Road, New Taipei Industrial Park, Wuku District, New Taipei City, Taiwan 24803/新北市五股區新北產業園區五工路 134 號
t (886-2) 2299-3279 f (886-2) 2298-0488 www.tw.sgs.com
Member of SGS Group

DASY5 Validation Report for Body TSL

Date: 20.06.2019

Test Laboratory: SPEAG, Zurich, Switzerland

DUT: Dipole 1750 MHz; Type: D1750V2; Serial: D1750V2 - SN:1023

Communication System: UID 0 - CW; Frequency: 1750 MHz
Medium parameters used: f = 1750 MHz; σ = 1.46 S/m; ε_r = 53.9; ρ = 1000 kg/m^3
Phantom section: Flat Section
Measurement Standard: DASY5 (IEEE/IEC/ANSI C63.19-2011)

DASY52 Configuration:

- Probe: EX3DV4 - SN7349; ConvF(8.45, 8.45, 8.45) @ 1750 MHz; Calibrated: 29.05.2019
- Sensor-Surface: 1.4mm (Mechanical Surface Detection)
- Electronics: DAE4 Sn601; Calibrated: 30.04.2019
- Phantom: Flat Phantom 5.0 (back); Type: QD 000 P50 AA; Serial: 1002
- DASY52 52.10.2(1504); SEMCAD X 14.6.12(7470)

Dipole Calibration for Body Tissue/Pin=250 mW, d=10mm/Zoom Scan (7x7x7)/Cube 0:
Measurement grid: dx=5mm, dy=5mm, dz=5mm
Reference Value = 102.7 V/m; Power Drift = -0.00 dB
Peak SAR (extrapolated) = 16.5 W/kg
SAR(1 g) = 9.23 W/kg; SAR(10 g) = 4.91 W/kg
Maximum value of SAR (measured) = 14.0 W/kg

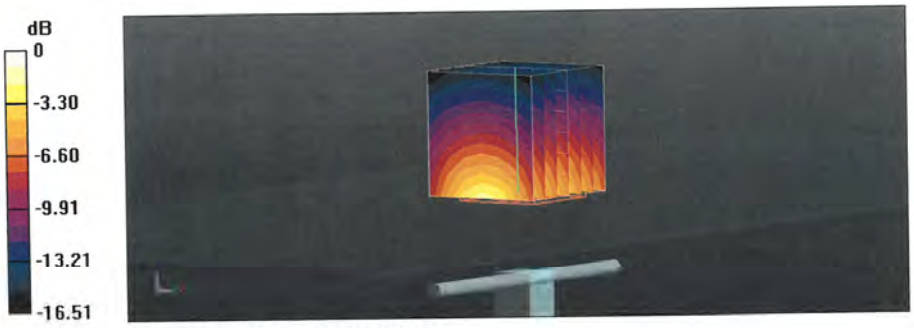

0 dB = 14.0 W/kg = 11.46 dBW/kg

Unless otherwise stated the results shown in this test report refer only to the sample(s) tested and such sample(s) are retained for 90 days only.
除非另有說明，此報告結果僅對測試之樣品負責，同時此樣品僅保留90天。本報告未經本公司書面許可，不可部份複製。
This document is issued by the Company subject to its General Conditions of Service printed overleaf, available on request or accessible at www.sgs.com/terms_and_conditions.htm and for electronic format documents, subject to Terms and Conditions for Electronic Documents at www.sgs.com/terms_e-document.htm. Attention is drawn to the limitation of liability, indemnification and jurisdiction issues defined therein. Any holder of this document is advised that information contained hereon reflects the Company's findings at the time of its intervention only and within the limits of Client's instructions, if any. The Company's sole responsibility is to its Client and this document does not exonerate parties to a transaction from exercising all their rights and obligations under the transaction documents. This document cannot be reproduced except in full, without prior written approval of the Company. Any unauthorized alteration, forgery or falsification of the content or appearance of this document is unlawful and offenders may be prosecuted to the fullest extent of the law.

SGS Taiwan Ltd. 台灣檢驗科技股份有限公司
No.134,Wu Kung Road, New Taipei Industrial Park, Wuku District, New Taipei City, Taiwan 24803/新北市五股區新北產業園區五工路 134 號
t (886-2) 2299-3279 f (886-2) 2298-0488 www.tw.sgs.com
Member of SGS Group

Impedance Measurement Plot for Body TSL

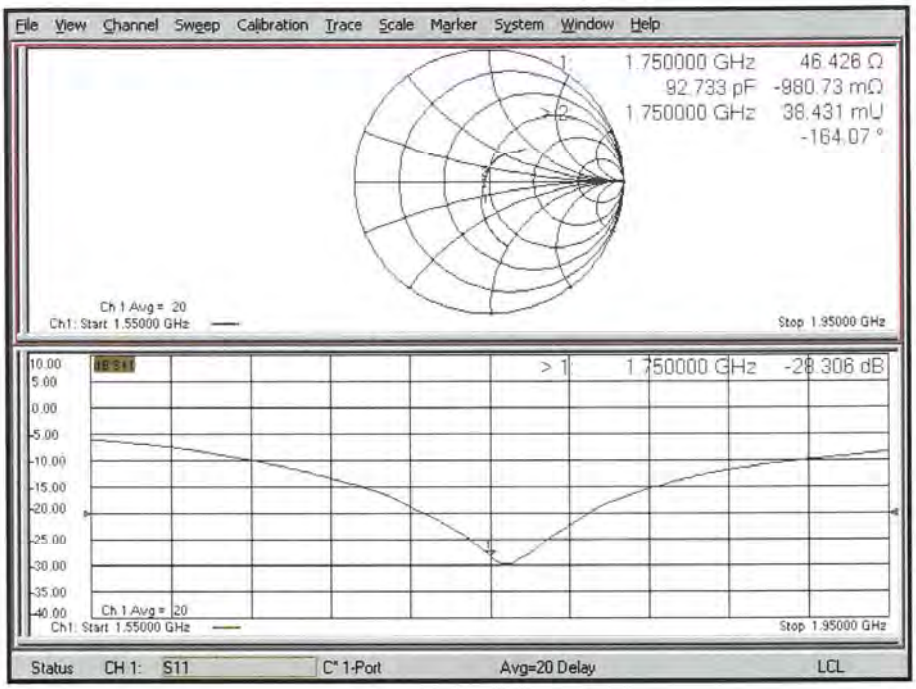

Unless otherwise stated the results shown in this test report refer only to the sample(s) tested and such sample(s) are retained for 90 days only.
除非另有說明，此報告結果僅對測試之樣品負責，同時此樣品僅保留90天。本報告未經本公司書面許可，不可部份複製。
This document is issued by the Company subject to its General Conditions of Service printed overleaf, available on request or accessible at www.sgs.com/terms_and_conditions.htm and for electronic format documents, subject to Terms and Conditions for Electronic Documents at www.sgs.com/terms_e-document.htm. Attention is drawn to the limitation of liability, indemnification and jurisdiction issues defined therein. Any holder of this document is advised that information contained hereon reflects the Company's findings at the time of its intervention only and within the limits of Client's instructions, if any. The Company's sole responsibility is to its Client and this document does not exonerate parties to a transaction from exercising all their rights and obligations under the transaction documents. This document cannot be reproduced except in full, without prior written approval of the Company. Any unauthorized alteration, forgery or falsification of the content or appearance of this document is unlawful and offenders may be prosecuted to the fullest extent of the law.

SGS Taiwan Ltd. 台灣檢驗科技股份有限公司
No.134,Wu Kung Road, New Taipei Industrial Park, Wuku District, New Taipei City, Taiwan 24803/新北市五股區新北產業園區五工路 134 號
t (886-2) 2299-3279 f (886-2) 2298-0488 www.tw.sgs.com
Member of SGS Group

Calibration Laboratory of
Schmid & Partner
Engineering AG
Zeughausstrasse 43, 8004 Zurich, Switzerland

S Schweizerischer Kalibrierdienst
C Service suisse d'étalonnage
Servizio svizzero di taratura
S Swiss Calibration Service

Accredited by the Swiss Accreditation Service (SAS)
The Swiss Accreditation Service is one of the signatories to the EA Multilateral Agreement for the recognition of calibration certificates

Accreditation No.: SCS 0108

Client **SGS-TW (Auden)**

Certificate No: D1900V2-5d173_Apr19

CALIBRATION CERTIFICATE

Object	D1900V2 - SN:5d173
Calibration procedure(s)	QA CAL-05.v11 Calibration Procedure for SAR Validation Sources between 0.7-3 GHz
Calibration date:	April 23, 2019

This calibration certificate documents the traceability to national standards, which realize the physical units of measurements (SI).
The measurements and the uncertainties with confidence probability are given on the following pages and are part of the certificate.

All calibrations have been conducted in the closed laboratory facility: environment temperature (22 ± 3)°C and humidity < 70%.

Calibration Equipment used (M&TE critical for calibration)

Primary Standards	ID #	Cal Date (Certificate No.)	Scheduled Calibration
Power meter NRP	SN: 104778	03-Apr-19 (No. 217-02892/02893)	Apr-20
Power sensor NRP-Z91	SN: 103244	03-Apr-19 (No. 217-02892)	Apr-20
Power sensor NRP-Z91	SN: 103245	03-Apr-19 (No. 217-02893)	Apr-20
Reference 20 dB Attenuator	SN: 5058 (20k)	04-Apr-19 (No. 217-02894)	Apr-20
Type-N mismatch combination	SN: 5047.2 / 06327	04-Apr-19 (No. 217-02895)	Apr-20
Reference Probe EX3DV4	SN: 7349	31-Dec-18 (No. EX3-7349_Dec18)	Dec-19
DAE4	SN: 601	04-Oct-18 (No. DAE4-601_Oct18)	Oct-19

Secondary Standards	ID #	Check Date (in house)	Scheduled Check
Power meter E4419B	SN: GB39512475	07-Oct-15 (in house check Feb-19)	In house check: Oct-20
Power sensor HP 8481A	SN: US37292783	07-Oct-15 (in house check Oct-18)	In house check: Oct-20
Power sensor HP 8481A	SN: MY41092317	07-Oct-15 (in house check Oct-18)	In house check: Oct-20
RF generator R&S SMT-06	SN: 100972	15-Jun-15 (in house check Oct-18)	In house check: Oct-20
Network Analyzer Agilent E8358A	SN: US41080477	31-Mar-14 (in house check Oct-18)	In house check: Oct-19

	Name	Function	Signature
Calibrated by:	Michael Weber	Laboratory Technician	M.Weber
Approved by:	Katja Pokovic	Technical Manager	

Issued: April 23, 2019

This calibration certificate shall not be reproduced except in full without written approval of the laboratory.

Unless otherwise stated the results shown in this test report refer only to the sample(s) tested and such sample(s) are retained for 90 days only.
除非另有說明，此報告結果僅對測試之樣品負責，同時此樣品僅保留90天。本報告未經本公司書面許可，不可部份複製。
This document is issued by the Company subject to its General Conditions of Service printed overleaf, available on request or accessible at www.sgs.com/terms_and_conditions.htm and for electronic format documents, subject to Terms and Conditions for Electronic Documents at www.sgs.com/terms_e-document.htm. Attention is drawn to the limitation of liability, indemnification and jurisdiction issues defined therein. Any holder of this document is advised that information contained hereon reflects the Company's findings at the time of its intervention only and within the limits of Client's instructions, if any. The Company's sole responsibility is to its Client and this document does not exonerate parties to a transaction from exercising all their rights and obligations under the transaction documents. This document cannot be reproduced except in full, without prior written approval of the Company. Any unauthorized alteration, forgery or falsification of the content or appearance of this document is unlawful and offenders may be prosecuted to the fullest extent of the law.

Calibration Laboratory of
Schmid & Partner
Engineering AG
Zeughausstrasse 43, 8004 Zurich, Switzerland

S Schweizerischer Kalibrierdienst
C Service suisse d'étalonnage
Servizio svizzero di taratura
S Swiss Calibration Service

Accredited by the Swiss Accreditation Service (SAS)
The Swiss Accreditation Service is one of the signatories to the EA Multilateral Agreement for the recognition of calibration certificates

Accreditation No.: SCS 0108

Glossary:

TSL	tissue simulating liquid
ConvF	sensitivity in TSL / NORM x,y,z
N/A	not applicable or not measured

Calibration is Performed According to the Following Standards:

a) IEEE Std 1528-2013, "IEEE Recommended Practice for Determining the Peak Spatial-Averaged Specific Absorption Rate (SAR) in the Human Head from Wireless Communications Devices: Measurement Techniques", June 2013
b) IEC 62209-1, "Measurement procedure for the assessment of Specific Absorption Rate (SAR) from hand-held and body-mounted devices used next to the ear (frequency range of 300 MHz to 6 GHz)", July 2016
c) IEC 62209-2, "Procedure to determine the Specific Absorption Rate (SAR) for wireless communication devices used in close proximity to the human body (frequency range of 30 MHz to 6 GHz)", March 2010
d) KDB 865664, "SAR Measurement Requirements for 100 MHz to 6 GHz"

Additional Documentation:

e) DASY4/5 System Handbook

Methods Applied and Interpretation of Parameters:

- *Measurement Conditions:* Further details are available from the Validation Report at the end of the certificate. All figures stated in the certificate are valid at the frequency indicated.
- *Antenna Parameters with TSL:* The dipole is mounted with the spacer to position its feed point exactly below the center marking of the flat phantom section, with the arms oriented parallel to the body axis.
- *Feed Point Impedance and Return Loss:* These parameters are measured with the dipole positioned under the liquid filled phantom. The impedance stated is transformed from the measurement at the SMA connector to the feed point. The Return Loss ensures low reflected power. No uncertainty required.
- *Electrical Delay:* One-way delay between the SMA connector and the antenna feed point. No uncertainty required.
- *SAR measured:* SAR measured at the stated antenna input power.
- *SAR normalized:* SAR as measured, normalized to an input power of 1 W at the antenna connector.
- *SAR for nominal TSL parameters:* The measured TSL parameters are used to calculate the nominal SAR result.

The reported uncertainty of measurement is stated as the standard uncertainty of measurement multiplied by the coverage factor k=2, which for a normal distribution corresponds to a coverage probability of approximately 95%.

Unless otherwise stated the results shown in this test report refer only to the sample(s) tested and such sample(s) are retained for 90 days only.
除非另有說明，此報告結果僅對測試之樣品負責，同時此樣品僅保留90天。本報告未經本公司書面許可，不可部份複製。
This document is issued by the Company subject to its General Conditions of Service printed overleaf, available on request or accessible at www.sgs.com/terms_and_conditions.htm and for electronic format documents, subject to Terms and Conditions for Electronic Documents at www.sgs.com/terms_e-document.htm. Attention is drawn to the limitation of liability, indemnification and jurisdiction issues defined therein. Any holder of this document is advised that information contained hereon reflects the Company's findings at the time of its intervention only and within the limits of Client's instructions, if any. The Company's sole responsibility is to its Client and this document does not exonerate parties to a transaction from exercising all their rights and obligations under the transaction documents. This document cannot be reproduced except in full, without prior written approval of the Company. Any unauthorized alteration, forgery or falsification of the content or appearance of this document is unlawful and offenders may be prosecuted to the fullest extent of the law.

Measurement Conditions

DASY system configuration, as far as not given on page 1.

DASY Version	DASY5	V52.10.2
Extrapolation	Advanced Extrapolation	
Phantom	Modular Flat Phantom	
Distance Dipole Center - TSL	10 mm	with Spacer
Zoom Scan Resolution	dx, dy, dz = 5 mm	
Frequency	1900 MHz ± 1 MHz	

Head TSL parameters

The following parameters and calculations were applied.

	Temperature	**Permittivity**	**Conductivity**
Nominal Head TSL parameters	22.0 °C	40.0	1.40 mho/m
Measured Head TSL parameters	(22.0 ± 0.2) °C	40.6 ± 6 %	1.38 mho/m ± 6 %
Head TSL temperature change during test	< 0.5 °C	----	----

SAR result with Head TSL

SAR averaged over 1 cm³ (1 g) of Head TSL	Condition	
SAR measured	250 mW input power	9.92 W/kg
SAR for nominal Head TSL parameters	normalized to 1W	**40.2 W/kg ± 17.0 % (k=2)**

SAR averaged over 10 cm³ (10 g) of Head TSL	condition	
SAR measured	250 mW input power	5.22 W/kg
SAR for nominal Head TSL parameters	normalized to 1W	**21.0 W/kg ± 16.5 % (k=2)**

Unless otherwise stated the results shown in this test report refer only to the sample(s) tested and such sample(s) are retained for 90 days only.
除非另有說明，此報告結果僅對測試之樣品負責，同時此樣品僅保留90天。本報告未經本公司書面許可，不可部份複製。
This document is issued by the Company subject to its General Conditions of Service printed overleaf, available on request or accessible at www.sgs.com/terms_and_conditions.htm and for electronic format documents, subject to Terms and Conditions for Electronic Documents at www.sgs.com/terms_e-document.htm. Attention is drawn to the limitation of liability, indemnification and jurisdiction issues defined therein. Any holder of this document is advised that information contained hereon reflects the Company's findings at the time of its intervention only and within the limits of Client's instructions, if any. The Company's sole responsibility is to its Client and this document does not exonerate parties to a transaction from exercising all their rights and obligations under the transaction documents. This document cannot be reproduced except in full, without prior written approval of the Company. Any unauthorized alteration, forgery or falsification of the content or appearance of this document is unlawful and offenders may be prosecuted to the fullest extent of the law.

SGS Taiwan Ltd. 台灣檢驗科技股份有限公司
No.134,Wu Kung Road, New Taipei Industrial Park, Wuku District, New Taipei City, Taiwan 24803/新北市五股區新北產業園區五工路 134 號
t (886-2) 2299-3279 f (886-2) 2298-0488 www.tw.sgs.com
Member of SGS Group

Appendix (Additional assessments outside the scope of SCS 0108)

Antenna Parameters with Head TSL

Impedance, transformed to feed point	52.3 Ω + 5.1 jΩ
Return Loss	- 25.3 dB

General Antenna Parameters and Design

Electrical Delay (one direction)	1.201 ns

After long term use with 100W radiated power, only a slight warming of the dipole near the feedpoint can be measured.

The dipole is made of standard semirigid coaxial cable. The center conductor of the feeding line is directly connected to the second arm of the dipole. The antenna is therefore short-circuited for DC-signals. On some of the dipoles, small end caps are added to the dipole arms in order to improve matching when loaded according to the position as explained in the "Measurement Conditions" paragraph. The SAR data are not affected by this change. The overall dipole length is still according to the Standard.
No excessive force must be applied to the dipole arms, because they might bend or the soldered connections near the feedpoint may be damaged.

Additional EUT Data

Manufactured by	SPEAG

Unless otherwise stated the results shown in this test report refer only to the sample(s) tested and such sample(s) are retained for 90 days only.
除非另有說明，此報告結果僅對測試之樣品負責，同時此樣品僅保留90天。本報告未經本公司書面許可，不可部份複製。
This document is issued by the Company subject to its General Conditions of Service printed overleaf, available on request or accessible at www.sgs.com/terms_and_conditions.htm and for electronic format documents, subject to Terms and Conditions for Electronic Documents at www.sgs.com/terms_e-document.htm. Attention is drawn to the limitation of liability, indemnification and jurisdiction issues defined therein. Any holder of this document is advised that information contained hereon reflects the Company's findings at the time of its intervention only and within the limits of Client's instructions, if any. The Company's sole responsibility is to its Client and this document does not exonerate parties to a transaction from exercising all their rights and obligations under the transaction documents. This document cannot be reproduced except in full, without prior written approval of the Company. Any unauthorized alteration, forgery or falsification of the content or appearance of this document is unlawful and offenders may be prosecuted to the fullest extent of the law.

SGS Taiwan Ltd. 台灣檢驗科技股份有限公司
No.134,Wu Kung Road, New Taipei Industrial Park, Wuku District, New Taipei City, Taiwan 24803/新北市五股區新北產業園區五工路 134 號
t (886-2) 2299-3279 f (886-2) 2298-0488 www.tw.sgs.com
Member of SGS Group

DASY5 Validation Report for Head TSL

Date: 23.04.2019

Test Laboratory: SPEAG, Zurich, Switzerland

DUT: Dipole 1900 MHz; Type: D1900V2; Serial: D1900V2 - SN:5d173

Communication System: UID 0 - CW; Frequency: 1900 MHz
Medium parameters used: f = 1900 MHz; σ = 1.38 S/m; ε_r = 40.6; ρ = 1000 kg/m^3
Phantom section: Flat Section
Measurement Standard: DASY5 (IEEE/IEC/ANSI C63.19-2011)

DASY52 Configuration:

- Probe: EX3DV4 - SN7349; ConvF(8.26, 8.26, 8.26) @ 1900 MHz; Calibrated: 31.12.2018
- Sensor-Surface: 1.4mm (Mechanical Surface Detection)
- Electronics: DAE4 Sn601; Calibrated: 04.10.2018
- Phantom: Flat Phantom 5.0 (front); Type: QD 000 P50 AA; Serial: 1001
- DASY52 52.10.2(1495); SEMCAD X 14.6.12(7450)

Dipole Calibration for Head Tissue/Pin=250 mW, d=10mm/Zoom Scan (7x7x7)/Cube 0:

Measurement grid: dx=5mm, dy=5mm, dz=5mm
Reference Value = 110.1 V/m; Power Drift = 0.03 dB
Peak SAR (extrapolated) = 18.1 W/kg
SAR(1 g) = 9.92 W/kg; SAR(10 g) = 5.22 W/kg
Maximum value of SAR (measured) = 15.3 W/kg

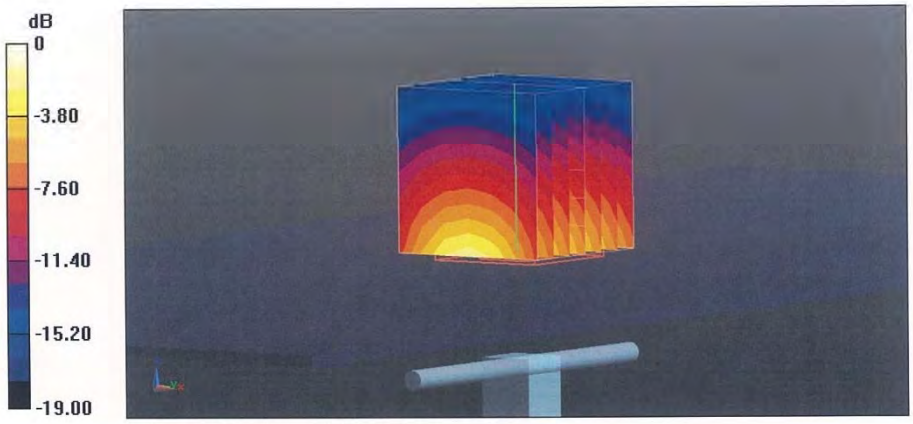

0 dB = 15.3 W/kg = 11.85 dBW/kg

Unless otherwise stated the results shown in this test report refer only to the sample(s) tested and such sample(s) are retained for 90 days only.
除非另有說明，此報告結果僅對測試之樣品負責，同時此樣品僅保留90天。本報告未經本公司書面許可，不可部份複製。
This document is issued by the Company subject to its General Conditions of Service printed overleaf, available on request or accessible at www.sgs.com/terms_and_conditions.htm and for electronic format documents, subject to Terms and Conditions for Electronic Documents at www.sgs.com/terms_e-document.htm. Attention is drawn to the limitation of liability, indemnification and jurisdiction issues defined therein. Any holder of this document is advised that information contained hereon reflects the Company's findings at the time of its intervention only and within the limits of Client's instructions, if any. The Company's sole responsibility is to its Client and this document does not exonerate parties to a transaction from exercising all their rights and obligations under the transaction documents. This document cannot be reproduced except in full, without prior written approval of the Company. Any unauthorized alteration, forgery or falsification of the content or appearance of this document is unlawful and offenders may be prosecuted to the fullest extent of the law.

SGS Taiwan Ltd. 台灣檢驗科技股份有限公司
No.134,Wu Kung Road, New Taipei Industrial Park, Wuku District, New Taipei City, Taiwan 24803/新北市五股區新北產業園區五工路 134 號
t (886-2) 2299-3279 f (886-2) 2298-0488 www.tw.sgs.com
Member of SGS Group

Impedance Measurement Plot for Head TSL

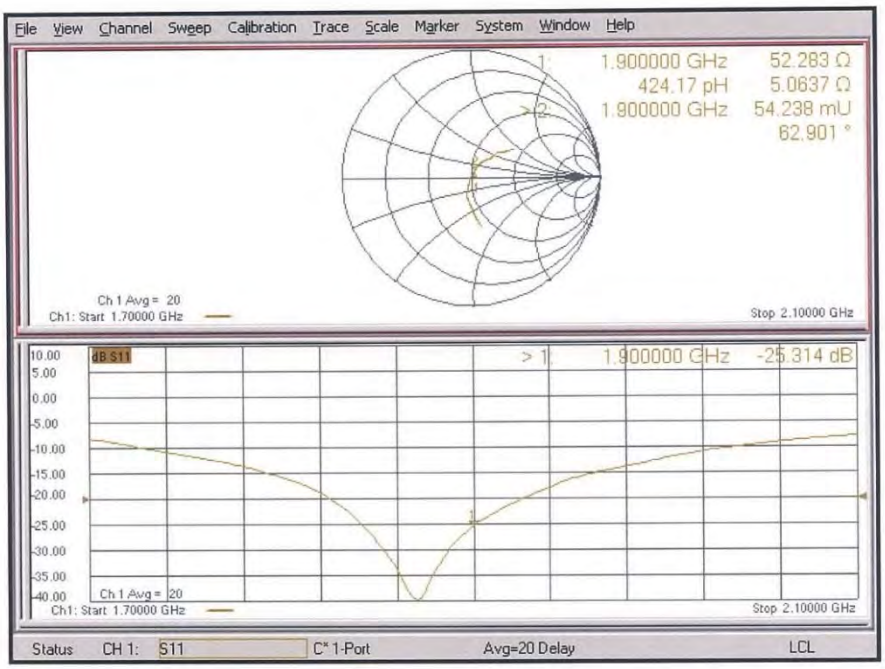

Unless otherwise stated the results shown in this test report refer only to the sample(s) tested and such sample(s) are retained for 90 days only.
除非另有說明，此報告結果僅對測試之樣品負責，同時此樣品僅保留90天。本報告未經本公司書面許可，不可部份複製。
This document is issued by the Company subject to its General Conditions of Service printed overleaf, available on request or accessible at www.sgs.com/terms_and_conditions.htm and for electronic format documents, subject to Terms and Conditions for Electronic Documents at www.sgs.com/terms_e-document.htm. Attention is drawn to the limitation of liability, indemnification and jurisdiction issues defined therein. Any holder of this document is advised that information contained hereon reflects the Company's findings at the time of its intervention only and within the limits of Client's instructions, if any. The Company's sole responsibility is to its Client and this document does not exonerate parties to a transaction from exercising all their rights and obligations under the transaction documents. This document cannot be reproduced except in full, without prior written approval of the Company. Any unauthorized alteration, forgery or falsification of the content or appearance of this document is unlawful and offenders may be prosecuted to the fullest extent of the law.

SGS Taiwan Ltd. 台灣檢驗科技股份有限公司
No.134,Wu Kung Road, New Taipei Industrial Park, Wuku District, New Taipei City, Taiwan 24803/新北市五股區新北產業園區五工路 134 號
t (886-2) 2299-3279 f (886-2) 2298-0488 www.tw.sgs.com
Member of SGS Group

Calibration Laboratory of
Schmid & Partner
Engineering AG
Zeughausstrasse 43, 8004 Zurich, Switzerland

S Schweizerischer Kalibrierdienst
C Service suisse d'étalonnage
Servizio svizzero di taratura
S Swiss Calibration Service

Accredited by the Swiss Accreditation Service (SAS)
The Swiss Accreditation Service is one of the signatories to the EA Multilateral Agreement for the recognition of calibration certificates

Accreditation No.: SCS 0108

Client **Auden** **Certificate No: D1900V2-5d142_Jul19**

CALIBRATION CERTIFICATE

Object	D1900V2 - SN:5d142
Calibration procedure(s)	QA CAL-05.v11 Calibration Procedure for SAR Validation Sources between 0.7-3 GHz
Calibration date:	July 26, 2019

This calibration certificate documents the traceability to national standards, which realize the physical units of measurements (SI).
The measurements and the uncertainties with confidence probability are given on the following pages and are part of the certificate.

All calibrations have been conducted in the closed laboratory facility: environment temperature (22 ± 3)°C and humidity < 70%.

Calibration Equipment used (M&TE critical for calibration)

Primary Standards	ID #	Cal Date (Certificate No.)	Scheduled Calibration
Power meter NRP	SN: 104778	03-Apr-19 (No. 217-02892/02893)	Apr-20
Power sensor NRP-Z91	SN: 103244	03-Apr-19 (No. 217-02892)	Apr-20
Power sensor NRP-Z91	SN: 103245	03-Apr-19 (No. 217-02893)	Apr-20
Reference 20 dB Attenuator	SN: 5058 (20k)	04-Apr-19 (No. 217-02894)	Apr-20
Type-N mismatch combination	SN: 5047.2 / 06327	04-Apr-19 (No. 217-02895)	Apr-20
Reference Probe EX3DV4	SN: 7349	29-May-19 (No. EX3-7349_May19)	May-20
DAE4	SN: 601	30-Apr-19 (No. DAE4-601_Apr19)	Apr-20

Secondary Standards	ID #	Check Date (in house)	Scheduled Check
Power meter E4419B	SN: GB39512475	30-Oct-14 (in house check Feb-19)	In house check: Oct-20
Power sensor HP 8481A	SN: US37292783	07-Oct-15 (in house check Oct-18)	In house check: Oct-20
Power sensor HP 8481A	SN: MY41092317	07-Oct-15 (in house check Oct-18)	In house check: Oct-20
RF generator R&S SMT-06	SN: 100972	15-Jun-15 (in house check Oct-18)	In house check: Oct-20
Network Analyzer Agilent E8358A	SN: US41080477	31-Mar-14 (in house check Oct-18)	In house check: Oct-19

	Name	Function	Signature
Calibrated by:	Claudio Leubler	Laboratory Technician	
Approved by:	Katja Pokovic	Technical Manager	

Issued: July 26, 2019

This calibration certificate shall not be reproduced except in full without written approval of the laboratory.

Unless otherwise stated the results shown in this test report refer only to the sample(s) tested and such sample(s) are retained for 90 days only.
除非另有說明，此報告結果僅對測試之樣品負責，同時此樣品僅保留90天。本報告未經本公司書面許可，不可部份複製。
This document is issued by the Company subject to its General Conditions of Service printed overleaf, available on request or accessible at www.sgs.com/terms_and_conditions.htm and for electronic format documents, subject to Terms and Conditions for Electronic Documents at www.sgs.com/terms_e-document.htm. Attention is drawn to the limitation of liability, indemnification and jurisdiction issues defined therein. Any holder of this document is advised that information contained hereon reflects the Company's findings at the time of its intervention only and within the limits of Client's instructions, if any. The Company's sole responsibility is to its Client and this document does not exonerate parties to a transaction from exercising all their rights and obligations under the transaction documents. This document cannot be reproduced except in full, without prior written approval of the Company. Any unauthorized alteration, forgery or falsification of the content or appearance of this document is unlawful and offenders may be prosecuted to the fullest extent of the law.

Calibration Laboratory of
Schmid & Partner
Engineering AG
Zeughausstrasse 43, 8004 Zurich, Switzerland

S Schweizerischer Kalibrierdienst
C Service suisse d'étalonnage
Servizio svizzero di taratura
S Swiss Calibration Service

Accredited by the Swiss Accreditation Service (SAS)
The Swiss Accreditation Service is one of the signatories to the EA Multilateral Agreement for the recognition of calibration certificates

Accreditation No.: **SCS 0108**

Glossary:

TSL	tissue simulating liquid
ConvF	sensitivity in TSL / NORM x,y,z
N/A	not applicable or not measured

Calibration is Performed According to the Following Standards:

a) IEEE Std 1528-2013, "IEEE Recommended Practice for Determining the Peak Spatial-Averaged Specific Absorption Rate (SAR) in the Human Head from Wireless Communications Devices: Measurement Techniques", June 2013
b) IEC 62209-1, "Measurement procedure for the assessment of Specific Absorption Rate (SAR) from hand-held and body-mounted devices used next to the ear (frequency range of 300 MHz to 6 GHz)", July 2016
c) IEC 62209-2, "Procedure to determine the Specific Absorption Rate (SAR) for wireless communication devices used in close proximity to the human body (frequency range of 30 MHz to 6 GHz)", March 2010
d) KDB 865664, "SAR Measurement Requirements for 100 MHz to 6 GHz"

Additional Documentation:

e) DASY4/5 System Handbook

Methods Applied and Interpretation of Parameters:

- *Measurement Conditions:* Further details are available from the Validation Report at the end of the certificate. All figures stated in the certificate are valid at the frequency indicated.
- *Antenna Parameters with TSL:* The dipole is mounted with the spacer to position its feed point exactly below the center marking of the flat phantom section, with the arms oriented parallel to the body axis.
- *Feed Point Impedance and Return Loss:* These parameters are measured with the dipole positioned under the liquid filled phantom. The impedance stated is transformed from the measurement at the SMA connector to the feed point. The Return Loss ensures low reflected power. No uncertainty required.
- *Electrical Delay:* One-way delay between the SMA connector and the antenna feed point. No uncertainty required.
- *SAR measured:* SAR measured at the stated antenna input power.
- *SAR normalized:* SAR as measured, normalized to an input power of 1 W at the antenna connector.
- *SAR for nominal TSL parameters:* The measured TSL parameters are used to calculate the nominal SAR result.

The reported uncertainty of measurement is stated as the standard uncertainty of measurement multiplied by the coverage factor k=2, which for a normal distribution corresponds to a coverage probability of approximately 95%.

Unless otherwise stated the results shown in this test report refer only to the sample(s) tested and such sample(s) are retained for 90 days only.
除非另有說明，此報告結果僅對測試之樣品負責，同時此樣品僅保留90天。本報告未經本公司書面許可，不可部份複製。
This document is issued by the Company subject to its General Conditions of Service printed overleaf, available on request or accessible at www.sgs.com/terms_and_conditions.htm and for electronic format documents, subject to Terms and Conditions for Electronic Documents at www.sgs.com/terms_e-document.htm. Attention is drawn to the limitation of liability, indemnification and jurisdiction issues defined therein. Any holder of this document is advised that information contained hereon reflects the Company's findings at the time of its intervention only and within the limits of Client's instructions, if any. The Company's sole responsibility is to its Client and this document does not exonerate parties to a transaction from exercising all their rights and obligations under the transaction documents. This document cannot be reproduced except in full, without prior written approval of the Company. Any unauthorized alteration, forgery or falsification of the content or appearance of this document is unlawful and offenders may be prosecuted to the fullest extent of the law.

Measurement Conditions

DASY system configuration, as far as not given on page 1.

DASY Version	DASY5	V52.10.2
Extrapolation	Advanced Extrapolation	
Phantom	Modular Flat Phantom	
Distance Dipole Center - TSL	10 mm	with Spacer
Zoom Scan Resolution	dx, dy, dz = 5 mm	
Frequency	1900 MHz ± 1 MHz	

Head TSL parameters

The following parameters and calculations were applied.

	Temperature	Permittivity	Conductivity
Nominal Head TSL parameters	22.0 °C	40.0	1.40 mho/m
Measured Head TSL parameters	(22.0 ± 0.2) °C	41.5 ± 6 %	1.37 mho/m ± 6 %
Head TSL temperature change during test	< 0.5 °C	----	----

SAR result with Head TSL

SAR averaged over 1 cm³ (1 g) of Head TSL	Condition	
SAR measured	250 mW input power	9.94 W/kg
SAR for nominal Head TSL parameters	normalized to 1W	**40.6 W/kg ± 17.0 % (k=2)**

SAR averaged over 10 cm³ (10 g) of Head TSL	condition	
SAR measured	250 mW input power	5.22 W/kg
SAR for nominal Head TSL parameters	normalized to 1W	**21.2 W/kg ± 16.5 % (k=2)**

Body TSL parameters

The following parameters and calculations were applied.

	Temperature	Permittivity	Conductivity
Nominal Body TSL parameters	22.0 °C	53.3	1.52 mho/m
Measured Body TSL parameters	(22.0 ± 0.2) °C	54.1 ± 6 %	1.48 mho/m ± 6 %
Body TSL temperature change during test	< 0.5 °C	----	----

SAR result with Body TSL

SAR averaged over 1 cm³ (1 g) of Body TSL	Condition	
SAR measured	250 mW input power	9.77 W/kg
SAR for nominal Body TSL parameters	normalized to 1W	**39.8 W/kg ± 17.0 % (k=2)**

SAR averaged over 10 cm³ (10 g) of Body TSL	condition	
SAR measured	250 mW input power	5.17 W/kg
SAR for nominal Body TSL parameters	normalized to 1W	**20.9 W/kg ± 16.5 % (k=2)**

Unless otherwise stated the results shown in this test report refer only to the sample(s) tested and such sample(s) are retained for 90 days only.
除非另有說明，此報告結果僅對測試之樣品負責，同時此樣品僅保留90天。本報告未經本公司書面許可，不可部份複製。
This document is issued by the Company subject to its General Conditions of Service printed overleaf, available on request or accessible at www.sgs.com/terms_and_conditions.htm and for electronic format documents, subject to Terms and Conditions for Electronic Documents at www.sgs.com/terms_e-document.htm. Attention is drawn to the limitation of liability, indemnification and jurisdiction issues defined therein. Any holder of this document is advised that information contained hereon reflects the Company's findings at the time of its intervention only and within the limits of Client's instructions, if any. The Company's sole responsibility is to its Client and this document does not exonerate parties to a transaction from exercising all their rights and obligations under the transaction documents. This document cannot be reproduced except in full, without prior written approval of the Company. Any unauthorized alteration, forgery or falsification of the content or appearance of this document is unlawful and offenders may be prosecuted to the fullest extent of the law.

SGS Taiwan Ltd. 台灣檢驗科技股份有限公司
No.134,Wu Kung Road, New Taipei Industrial Park, Wuku District, New Taipei City, Taiwan 24803/新北市五股區新北產業園區五工路 134 號
t (886-2) 2299-3279 f (886-2) 2298-0488 www.tw.sgs.com
Member of SGS Group

Appendix (Additional assessments outside the scope of SCS 0108)

Antenna Parameters with Head TSL

Impedance, transformed to feed point	51.7 Ω + 5.3 jΩ
Return Loss	- 25.3 dB

Antenna Parameters with Body TSL

Impedance, transformed to feed point	48.7 Ω + 6.5 jΩ
Return Loss	- 23.5 dB

General Antenna Parameters and Design

Electrical Delay (one direction)	1.198 ns

After long term use with 100W radiated power, only a slight warming of the dipole near the feedpoint can be measured.

The dipole is made of standard semirigid coaxial cable. The center conductor of the feeding line is directly connected to the second arm of the dipole. The antenna is therefore short-circuited for DC-signals. On some of the dipoles, small end caps are added to the dipole arms in order to improve matching when loaded according to the position as explained in the "Measurement Conditions" paragraph. The SAR data are not affected by this change. The overall dipole length is still according to the Standard.
No excessive force must be applied to the dipole arms, because they might bend or the soldered connections near the feedpoint may be damaged.

Additional EUT Data

Manufactured by	SPEAG

Unless otherwise stated the results shown in this test report refer only to the sample(s) tested and such sample(s) are retained for 90 days only.
除非另有說明，此報告結果僅對測試之樣品負責，同時此樣品僅保留90天。本報告未經本公司書面許可，不可部份複製。
This document is issued by the Company subject to its General Conditions of Service printed overleaf, available on request or accessible at www.sgs.com/terms_and_conditions.htm and for electronic format documents, subject to Terms and Conditions for Electronic Documents at www.sgs.com/terms_e-document.htm. Attention is drawn to the limitation of liability, indemnification and jurisdiction issues defined therein. Any holder of this document is advised that information contained hereon reflects the Company's findings at the time of its intervention only and within the limits of Client's instructions, if any. The Company's sole responsibility is to its Client and this document does not exonerate parties to a transaction from exercising all their rights and obligations under the transaction documents. This document cannot be reproduced except in full, without prior written approval of the Company. Any unauthorized alteration, forgery or falsification of the content or appearance of this document is unlawful and offenders may be prosecuted to the fullest extent of the law.

SGS Taiwan Ltd. 台灣檢驗科技股份有限公司
No.134,Wu Kung Road, New Taipei Industrial Park, Wuku District, New Taipei City, Taiwan 24803/新北市五股區新北產業園區五工路 134 號
t (886-2) 2299-3279 f (886-2) 2298-0488 www.tw.sgs.com
Member of SGS Group

DASY5 Validation Report for Head TSL

Date: 26.07.2019

Test Laboratory: SPEAG, Zurich, Switzerland

DUT: Dipole 1900 MHz; Type: D1900V2; Serial: D1900V2 - SN:5d142

Communication System: UID 0 - CW; Frequency: 1900 MHz
Medium parameters used: f = 1900 MHz; σ = 1.37 S/m; ε_r = 41.5; ρ = 1000 kg/m^3
Phantom section: Flat Section
Measurement Standard: DASY5 (IEEE/IEC/ANSI C63.19-2011)

DASY52 Configuration:

- Probe: EX3DV4 - SN7349; ConvF(8.44, 8.44, 8.44) @ 1900 MHz; Calibrated: 29.05.2019
- Sensor-Surface: 1.4mm (Mechanical Surface Detection)
- Electronics: DAE4 Sn601; Calibrated: 30.04.2019
- Phantom: Flat Phantom 5.0 (front); Type: QD 000 P50 AA; Serial: 1001
- DASY52 52.10.2(1504); SEMCAD X 14.6.12(7470)

Dipole Calibration for Head Tissue/Pin=250 mW, d=10mm/Zoom Scan (7x7x7)/Cube 0:

Measurement grid: dx=5mm, dy=5mm, dz=5mm
Reference Value = 110.3 V/m; Power Drift = 0.03 dB
Peak SAR (extrapolated) = 18.4 W/kg
SAR(1 g) = 9.94 W/kg; SAR(10 g) = 5.22 W/kg
Maximum value of SAR (measured) = 15.5 W/kg

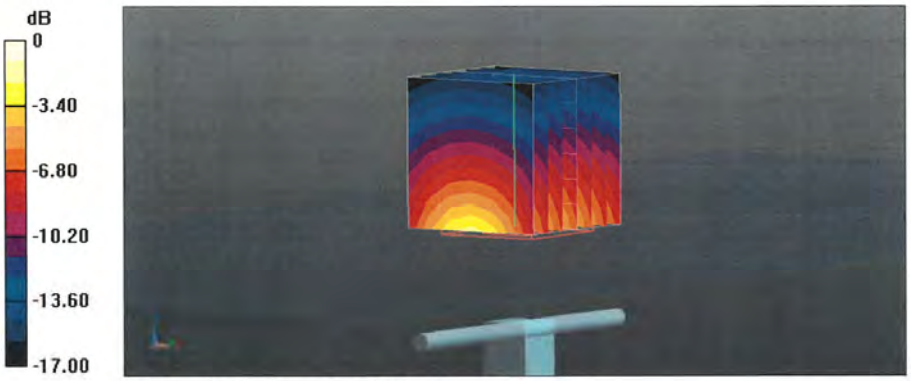

0 dB = 15.5 W/kg = 11.90 dBW/kg

Unless otherwise stated the results shown in this test report refer only to the sample(s) tested and such sample(s) are retained for 90 days only.
除非另有說明，此報告結果僅對測試之樣品負責，同時此樣品僅保留90天。本報告未經本公司書面許可，不可部份複製。
This document is issued by the Company subject to its General Conditions of Service printed overleaf, available on request or accessible at www.sgs.com/terms_and_conditions.htm and for electronic format documents, subject to Terms and Conditions for Electronic Documents at www.sgs.com/terms_e-document.htm. Attention is drawn to the limitation of liability, indemnification and jurisdiction issues defined therein. Any holder of this document is advised that information contained hereon reflects the Company's findings at the time of its intervention only and within the limits of Client's instructions, if any. The Company's sole responsibility is to its Client and this document does not exonerate parties to a transaction from exercising all their rights and obligations under the transaction documents. This document cannot be reproduced except in full, without prior written approval of the Company. Any unauthorized alteration, forgery or falsification of the content or appearance of this document is unlawful and offenders may be prosecuted to the fullest extent of the law.

SGS Taiwan Ltd. 台灣檢驗科技股份有限公司
No.134,Wu Kung Road, New Taipei Industrial Park, Wuku District, New Taipei City, Taiwan 24803/新北市五股區新北產業園區五工路 134 號
t (886-2) 2299-3279 f (886-2) 2298-0488 www.tw.sgs.com
Member of SGS Group

Impedance Measurement Plot for Head TSL

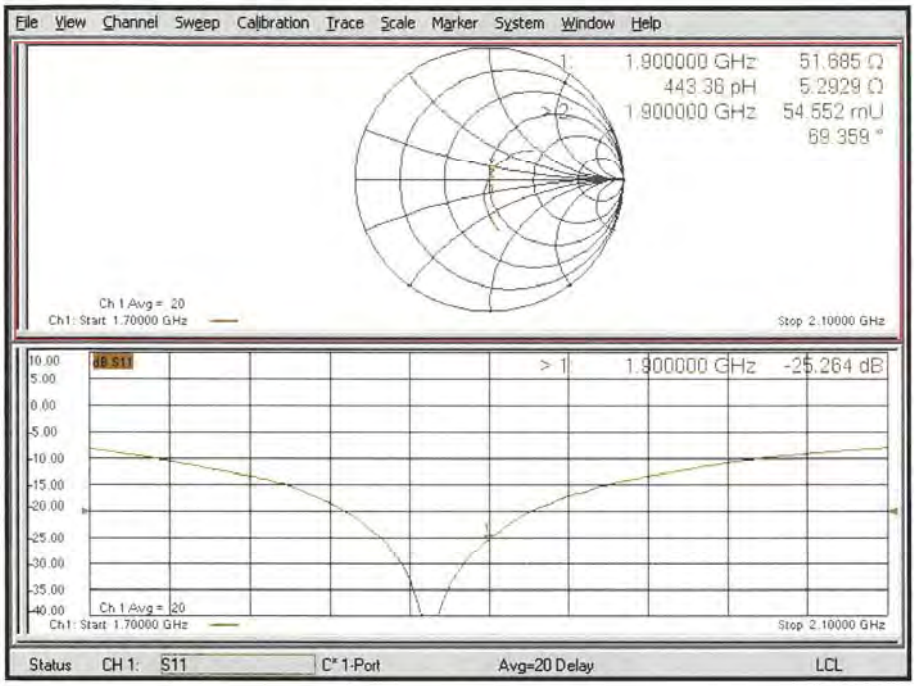

Unless otherwise stated the results shown in this test report refer only to the sample(s) tested and such sample(s) are retained for 90 days only.
除非另有說明，此報告結果僅對測試之樣品負責，同時此樣品僅保留90天。本報告未經本公司書面許可，不可部份複製。
This document is issued by the Company subject to its General Conditions of Service printed overleaf, available on request or accessible at www.sgs.com/terms_and_conditions.htm and for electronic format documents, subject to Terms and Conditions for Electronic Documents at www.sgs.com/terms_e-document.htm. Attention is drawn to the limitation of liability, indemnification and jurisdiction issues defined therein. Any holder of this document is advised that information contained hereon reflects the Company's findings at the time of its intervention only and within the limits of Client's instructions, if any. The Company's sole responsibility is to its Client and this document does not exonerate parties to a transaction from exercising all their rights and obligations under the transaction documents. This document cannot be reproduced except in full, without prior written approval of the Company. Any unauthorized alteration, forgery or falsification of the content or appearance of this document is unlawful and offenders may be prosecuted to the fullest extent of the law.

SGS Taiwan Ltd. 台灣檢驗科技股份有限公司
No.134,Wu Kung Road, New Taipei Industrial Park, Wuku District, New Taipei City, Taiwan 24803/新北市五股區新北產業園區五工路 134 號
t (886-2) 2299-3279 f (886-2) 2298-0488 www.tw.sgs.com
Member of SGS Group

DASY5 Validation Report for Body TSL

Date: 26.07.2019

Test Laboratory: SPEAG, Zurich, Switzerland

DUT: Dipole 1900 MHz; Type: D1900V2; Serial: D1900V2 - SN:5d142

Communication System: UID 0 - CW; Frequency: 1900 MHz
Medium parameters used: f = 1900 MHz; σ = 1.48 S/m; ε_r = 54.1; ρ = 1000 kg/m^3
Phantom section: Flat Section
Measurement Standard: DASY5 (IEEE/IEC/ANSI C63.19-2011)

DASY52 Configuration:

- Probe: EX3DV4 - SN7349; ConvF(8.42, 8.42, 8.42) @ 1900 MHz; Calibrated: 29.05.2019
- Sensor-Surface: 1.4mm (Mechanical Surface Detection)
- Electronics: DAE4 Sn601; Calibrated: 30.04.2019
- Phantom: Flat Phantom 5.0 (back); Type: QD 000 P50 AA; Serial: 1002
- DASY52 52.10.2(1504); SEMCAD X 14.6.12(7470)

Dipole Calibration for Body Tissue/Pin=250 mW, d=10mm/Zoom Scan (7x7x7)/Cube 0:
Measurement grid: dx=5mm, dy=5mm, dz=5mm
Reference Value = 104.1 V/m; Power Drift = -0.05 dB
Peak SAR (extrapolated) = 17.5 W/kg
SAR(1 g) = 9.77 W/kg; SAR(10 g) = 5.17 W/kg
Maximum value of SAR (measured) = 14.7 W/kg

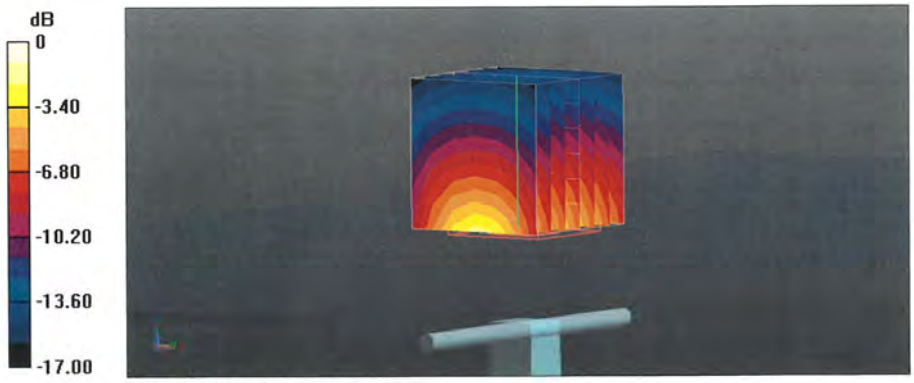

0 dB = 14.7 W/kg = 11.67 dBW/kg

Unless otherwise stated the results shown in this test report refer only to the sample(s) tested and such sample(s) are retained for 90 days only.
除非另有說明，此報告結果僅對測試之樣品負責，同時此樣品僅保留90天。本報告未經本公司書面許可，不可部份複製。
This document is issued by the Company subject to its General Conditions of Service printed overleaf, available on request or accessible at www.sgs.com/terms_and_conditions.htm and for electronic format documents, subject to Terms and Conditions for Electronic Documents at www.sgs.com/terms_e-document.htm. Attention is drawn to the limitation of liability, indemnification and jurisdiction issues defined therein. Any holder of this document is advised that information contained hereon reflects the Company's findings at the time of its intervention only and within the limits of Client's instructions, if any. The Company's sole responsibility is to its Client and this document does not exonerate parties to a transaction from exercising all their rights and obligations under the transaction documents. This document cannot be reproduced except in full, without prior written approval of the Company. Any unauthorized alteration, forgery or falsification of the content or appearance of this document is unlawful and offenders may be prosecuted to the fullest extent of the law.

SGS Taiwan Ltd. 台灣檢驗科技股份有限公司 | No.134,Wu Kung Road, New Taipei Industrial Park, Wuku District, New Taipei City, Taiwan 24803/新北市五股區新北產業園區五工路 134 號
t (886-2) 2299-3279 f (886-2) 2298-0488 www.tw.sgs.com
Member of SGS Group

Impedance Measurement Plot for Body TSL

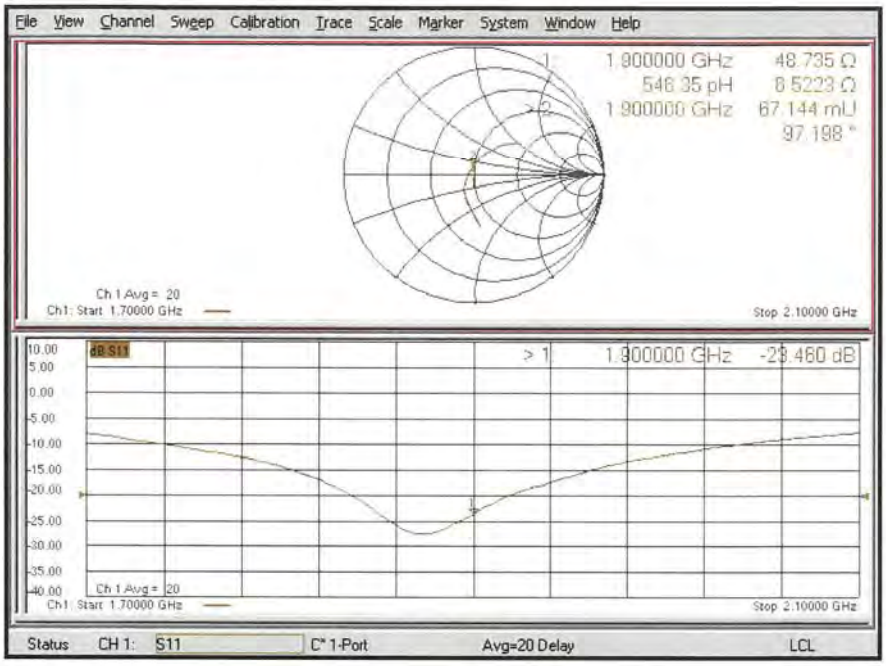

- End of report -

Unless otherwise stated the results shown in this test report refer only to the sample(s) tested and such sample(s) are retained for 90 days only.
除非另有說明，此報告結果僅對測試之樣品負責，同時此樣品僅保留90天。本報告未經本公司書面許可，不可部份複製。
This document is issued by the Company subject to its General Conditions of Service printed overleaf, available on request or accessible at www.sgs.com/terms_and_conditions.htm and for electronic format documents, subject to Terms and Conditions for Electronic Documents at www.sgs.com/terms_e-document.htm. Attention is drawn to the limitation of liability, indemnification and jurisdiction issues defined therein. Any holder of this document is advised that information contained hereon reflects the Company's findings at the time of its intervention only and within the limits of Client's instructions, if any. The Company's sole responsibility is to its Client and this document does not exonerate parties to a transaction from exercising all their rights and obligations under the transaction documents. This document cannot be reproduced except in full, without prior written approval of the Company. Any unauthorized alteration, forgery or falsification of the content or appearance of this document is unlawful and offenders may be prosecuted to the fullest extent of the law.

SGS Taiwan Ltd. 台灣檢驗科技股份有限公司
No.134,Wu Kung Road, New Taipei Industrial Park, Wuku District, New Taipei City, Taiwan 24803/新北市五股區新北產業園區五工路 134 號
t (886-2) 2299-3279 f (886-2) 2298-0488 www.tw.sgs.com
Member of SGS Group