Introduction

Thank you for purchasing “xxxx”.
Be sure to read this manual before and during use to ensure proper operation.

- The screens and illustrations in this manual are shown as examples. The actual screens and illustrations may differ.
- Note that “xxxx” is referred to as “handset” in this manual.
- This manual refers to microSD Card, microSDHC Card or microSDXC Card as “microSD Card” or “microSD”.
- Reproduction of this manual in part or in whole without prior permission is prohibited.
- The contents of this manual are subject to change without prior notice.

Basic package

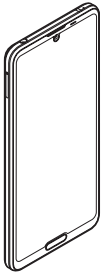

xxxx

Quick Start guide
(in Japanese only)

Warranty
(in Japanese only)

Notes on usage
(in Japanese only)

The following items are not included in the package.

- microSD memory card
- AC adapter
- Earphone
- USB Type-C cable

- Purchase a specified charger (sold separately).

(This drawing is not final)

Precautions (ALWAYS FOLLOW THESE DIRECTIONS)

- **Before use, read these "Precautions" carefully and use your handset properly.**
- **These precautions contain information intended to prevent bodily injury to the user and to surrounding people, as well as damage to property, and must be observed at all times.**
- **The following symbols indicate the different degrees of injury or damage that may occur if information provided is not observed and the handset is used improperly.**

⚠Danger	**This symbol indicates that "death or serious bodily injury (*1) may directly and immediately result from improper use".**
⚠Warning	**This symbol indicates that "death or serious bodily injury (*1) may result from improper use".**
⚠Caution	**This symbol indicates that "minor injury (*2) and/or property damage (*3) may result from improper use".**

*1 Serious bodily injury: This refers to loss of eyesight, bodily injury, burns (high- and low-temperature), electric shock, broken bones, injuries with residual aftereffects from poisoning, etc., and injuries requiring hospital admission for treatment or long-term hospital attendance as an outpatient.

*2 Minor injury: This refers to bodily injury, burns (high- and low-temperature), electric shock, etc. that do not require hospital admission for treatment or long-term hospital attendance as an outpatient.

*3 Property damage: This refers to extended damage to buildings, furniture, livestock, pets, etc.

- **The following symbols indicate specific directions.**

Don't	**Indicates a prohibited action.**	No wet hands	Indicates not to handle the device with wet hands.
No disassembly	Indicates not to disassemble the device.	Instruction	**Indicates that instructions specified are compulsory (must be followed).**
No liquids	Indicates not to use the device near water or get it wet.	Unplug	Indicates that the power cord must be unplugged from the outlet.

“Precautions” is explained in the following sections.

- Handling the handset, adapters, nano UIM card and TV antenna cable (general) P.8
- Handling the handset. P.10
- Handling adapters P.14
- Handling nano UIM card P.16
- Handling near electronic medical equipment. P.16
- Material list P.17
- Handling the sample (SIM eject tool). P.18

Handling the handset, adapters, nano UIM card and TV antenna cable (general)

⚠Danger

Don’t

Do not use, store or leave the equipment in locations subject to high temperatures or accumulation of heat (near a fire or heating unit, in a kotatsu or bedding, under direct sunlight, inside a vehicle on a hot day, etc.).

May cause fires, burns, bodily injury, electric shock, etc.

Don’t

Do not place the equipment inside cooking appliances such as microwave ovens and induction cookers or high pressure vessels such as pressure cookers, or near them.

May cause fires, burns, bodily injury, electric shock, etc.

Don’t

Do not sprinkle sand, soil or dirt on the equipment or put the equipment directly on it. Also, do not touch the equipment when sand etc. is adhering to your hand.

May cause fires, burns, bodily injury, electric shock, etc.
Refer to the following for details on waterproofness/dustproofness.
☞P.26 “Waterproof/Dustproof”

Don’t

Do not charge the equipment while it is wet with liquids such as water (drinking water, sweat, seawater, pet urine, etc.).

May cause fires, burns, bodily injury, electric shock, etc.
Refer to the following for details on waterproofness.
☞P.26 “Waterproof/Dustproof”

Don’t

Do not press the equipment strongly or broken it. Especially when you put and carry it in the pocket, do not let it hit or caught in the object .

May cause fires, burns, bodily injury, etc. because of catching fire, exploding, overheating or leaking of the internal battery.

※Take particular care with the followings

- Sitting or squatting down while you are putting the equipment in your pocket of trousers or skirt
- Letting the equipment caught in the door or vehicular door while you are putting the equipment in your pocket of outerwear
- Stepping on the equipment while it is placing on the soft object such as the sofa or bedding, floor

No disassembly

Do not attempt to disassemble or modify the equipment.
May cause fires, burns, bodily injury, electric shock, etc.

No liquids

Do not get the equipment wet with liquids such as water (drinking water, sweat, seawater, pet urine, etc.).
May cause fires, burns, bodily injury, electric shock, etc.
Refer to the following for details on waterproofness.
☞P.26 “Waterproof/Dustproof”

No liquids

Do not allow liquids such as water (drinking water, sweat, seawater, pet urine, etc.) to get inside the charger terminal or external connection jack.
May cause fires, burns, bodily injury, electric shock, etc.
Refer to the following for details on waterproofness.
☞P.26 “Waterproof/Dustproof”

Instruction

Use only optional parts specified by ●●●.
May cause fires, burns, bodily injury, electric shock, etc.

⚠Warning

Don’t

Do not subject the equipment to strong force, impacts or vibration such as letting it fall, stepping on it or throwing it.
May cause fires, burns, bodily injury, electric shock, etc.

Don’t

Do not allow conductive materials (such as metal objects and pencil lead) to come into contact with the charger terminal or external connection jack or dust to get inside it.
May cause fires, burns, bodily injury, electric shock, etc.

Don’t

Do not cover or wrap the equipment with bedding etc. when using or charging.
May cause fires, burns, etc.

Instruction

If charging is not completed after the specified charging time, stop charging.
May cause fires, burns, bodily injury, etc. because of overcharging.

Instruction

Be sure to turn off the handset and not to charge the battery in locations where flammable gas may be generated such as gas stations and where dust is generated.
May cause explosions, fires etc. if using the equipment in location where flammable gas etc. is generated.
To use Osaifu-Keitai in locations such as gas stations, be sure to turn off the power in advance (If NFC/Osaifu-Keitai lock is set, disable the lock before turning off the power).

Instruction

If any trouble such as an unusual odor, unusual noise, smoking, overheating, discoloration or deformation is found during use, charge or storage, follow the instructions below.

- Unplug the power plug from the outlet or accessory socket.
- Turn off the handset.

May cause fires, burns, bodily injury, electric shock, etc. if you do not follow the instructions above.

⚠Caution

Don't

Do not use a damaged equipment.

May cause fires, burns, bodily injury, etc.

Don't

Do not leave the equipment on unstable surfaces, such as on a wobbly table or sloped surface. Be very careful while the vibrator is set.

May fall and cause injury etc.

Don't

Do not use or store the equipment in locations that are subject to humidity, dust or high temperatures.

May cause fires, burns, electric shock, etc.

Refer to the following for details on waterproofness/dustproofness.

☞P.26 "Waterproof/Dustproof"

Don't

If being used by a child, have a guardian teach him/her the proper handling procedures and do not have him/her use it improperly.

May cause bodily injury etc.

Don't

Do not place the equipment where the young children can reach it.

A young child may swallow the equipment, or suffer bodily injury, electric shock, etc.

Instruction

Be careful when using the handset continuously for a long time or charging because it may become warm. Also, be careful not to touch it unintentionally for a long time when you fall asleep etc.

The handset or adapter may become warm when using an app, a call, data communication, watching TV or video, etc. for a long time or charging.

Directly touching a warmed part for a long time may cause redness, itching, rashes, low-temperature burns, etc. on your skin depending on your constitution or health condition.

Handling the handset

⚠Danger

Don't

Do not throw the handset into a fire or heat it.

May cause fires, burns, bodily injury, etc. because of catching fire, exploding, overheating or leaking of the internal battery.

Don't

Do not apply excessive force on the handset such as puncturing it with a nail (sharp object), hitting it with a hammer (hard object) or stepping on it.
May cause fires, burns, bodily injury, etc. because of catching fire, exploding, overheating or leaking of the internal battery.

Instruction

If the substance etc. inside the handset comes into contact with your eyes or mouth, immediately rinse the contacted area with clean water. Then seek prompt medical treatment.
May result in loss of eyesight, sick, etc. because of the substance etc. inside the handset.

⚠Warning

Don't

Do not point the illuminated light directly at someone's eyes. Especially when you use it for young children, keep sufficient distance from them.
Do not use Mobile light near people's faces. Eyesight may be temporarily affected leading to accidents etc.

Don't

Do not illuminate or emit the mobile light at anyone driving a car or other vehicles.
May prevent a driver from driving safely and cause a traffic accident etc.

Don't

Do not watch the screen which is flashing repeatedly for a long time.
May cause spasm or loss of consciousness.

Don't

Do not allow water or other liquids (drinking water, sweat, seawater, pet urine, etc.), metal, flammable material or other foreign object to enter the slot of the nano UIM Card and microSD Card tray on the handset.
Also, do not insert the nano UIM card or microSD Card in the wrong place or wrong side.
May cause fires, burns, bodily injury, electric shock, etc.

Don't

Do not expose the camera lens to direct sunlight etc. for an extended period.
May cause fires, burns, bodily injury etc. because of the light-collecting mechanism of the lens.

Instruction

Turn off the handset or set it to Airplane mode before going aboard an airplane.
Since using the handset on airplanes is restricted, follow the instructions given by the respective airlines.
May interfere with the operation of electronic devices installed on the airplane.
If you commit a prohibited act while using the handset on an airplane, you may be punished by law.

Instruction

Follow the instructions given by the respective medical facility regarding the use of the handset in a hospital.
Turn off the handset in areas where the use of mobile phones is prohibited.
May interfere with the operation of electronic devices and electronic medical equipment.

Instruction

Keep the handset away from the ears during a call in which hands-free is set, while the ringtone is ringing loudly, during stand-by, etc.
When you attach the earphone/microphone etc. to the handset to play games, video/music, etc., do not make the volume too loud.
During a call in which hands-free is set, loud sounds are being emitted from the handset.
Even during stand-by, the ringtone or alarm sound may activate suddenly.
Hearing loud sounds for a long time may damage your hearing such as deafness.
Also, excessively high volume prevent you from hearing ambient sounds and cause an accident.

Instruction

If you have a weak heart, take extra precautions when setting functions such as the vibrator and ringtone volume for incoming calls.
May have harmful effects on your heart.

Instruction

If you are using electronic medical equipment etc., contact the respective manufacturer or dealer to check whether the operation of the equipment is affected by signals.
May interfere with the operation of electronic medical equipment etc.

Instruction

Turn off the handset near high-precision electronic devices or devices that use weak electronic signals.
May interfere with the operation of electronic devices.
※Take particular care with the following devices
Hearing aids, implanted cardiac pacemakers, implanted cardioverter-defibrillators, other electronic medical equipment, other equipment controlled by electronic signals, etc. If you use an implanted cardiac pacemaker, implanted cardioverter-defibrillator or other electronic medical equipment, contact the respective manufacturer or dealer to check whether the operation of the equipment is affected by signals.

Instruction

If the display part or camera lens is damaged, be careful of broken glass and the exposed inside of the handset.
May cause burns, bodily injury, electric shock, etc. if you touch the broken or exposed parts.

Instruction

If the internal battery leaks or emits an unusual odor, immediately stop using the handset and move it away from any naked flames or fire.
The battery fluid is flammable and could ignite, causing a fire, explosion, etc.

Instruction

Do not allow a pet etc. to bite the handset.
May cause fires, burns, bodily injury, etc. because of catching fire, exploding, overheating or leaking of the internal battery.

⚠Caution

Don't

For using a motion sensor and geomagnetic sensor, check the safety around, hold the handset and do not swing it more than necessary.
May cause an accident such as bodily injury.

Don't

If the display is broken and the internal substance etc. then leaks, do not get it on your skin (face, hands, etc.), clothes, etc.
May result in damage to your eyes, skin, etc.
If the internal substance etc. comes into contact with your eyes, mouth, skin or clothes, immediately rinse the contacted area with clean water.
Also, if it comes into contact with your eyes or mouth, seek medical treatment immediately after rinsing the contacted area.

Don't

Do not dispose of the handset in ordinary garbage.
May cause fires, burns, bodily injury, etc. because of catching fire. Also, may damage to the environment. Take the unnecessary handset to a sales outlet such as a ●●● Shop or follow the instructions by a local institution that handles used handsets.

Don't

If the substance etc. inside the internal battery leaks, do not get the liquid on your skin (face, hands, etc.).
May result in damage to your eyes, skin, etc.
If the internal substance etc. comes into contact with your eyes, mouth, skin or clothes, immediately rinse the contacted area with clean water.
Also, if it comes into contact with your eyes or mouth, seek medical treatment immediately after rinsing the contacted area.

Instruction

When removing the nano UIM card, be careful with the tip of the SIM eject tool or paper clip not to injure any part of your body such as fingers.
May cause bodily injury etc. if you touch the tip of the SIM eject tool or paper clip.

Instruction

If you use the handset in a vehicle, contact the vehicle manufacturer or dealer to check whether the operation of the vehicle is affected by signals.
May interfere with the operation of electronic equipment in some vehicle models. In this case, stop using the handset.

Instruction

If any trouble on your skin occurs due to using the handset, immediately stop using it and seek medical treatment. Use of the handset may cause itching, rashes, eczema, etc. depending on your constitution or health condition.
Refer to the following for details on materials of each part.
☞P.17 "Material list"

Instruction

Make sure that there is no metal (a blade of cutter, staple, etc.) on the handset because the earpiece section, speaker section and back camera section contain parts that generate magnetic waves.
May cause bodily injury etc. because of the adhered object.

Instruction

Look at the display in a well-lit place, keeping a certain distance.
Eyesight may be weakened etc. if you look at it in a dark place or closely.

Handling adapters

⚠Warning

Don't

Do not use if the cord of the adapter is damaged.
May cause fires, burns, electric shock, etc.

Don't

Never use the adapter in humid locations such as a bathroom.
May cause fires, burns, electric shock, etc.

Don't

The DC adapter should only be used in negative grounded vehicles. Never use it in positive grounded vehicles.
May cause fires, burns, electric shock, etc.

Don't

Do not touch adapters if you hear thunder.
May cause electric shock etc.

Don't

Do not short-circuit the charger terminal when connected to an outlet or accessory socket. Also, do not allow any part of your body (hands, fingers, etc.) to come into contact with the charger terminal.
May cause fires, burns, electric shock, etc.

Don't

Do not place heavy objects on the cord of the adapter or apply excessive force on it such as pulling it.
May cause fires, burns, electric shock, etc.

Don't

When plugging/unplugging an AC adapter into/from the outlet, do not allow metallic objects to come into contact with the prongs of the plug.
May cause fires, burns, electric shock, etc.

Don't

Do not connect the voltage converter for overseas travel (travel converter) to the AC adapter.
May catch fire, or cause overheat, electric shock, etc.

Don't

Do not apply excessive force on the connection part with the adapter connected to the handset.
May cause fires, burns, bodily injury, electric shock, etc.

No wet hands

Do not handle the cord, charger terminal or power plug of the adapter with wet hands.
May cause fires, burns, electric shock, etc.

Instruction

Always use the specified power supply and voltage. When using overseas, use the AC adapter that is available overseas.

Using the incorrect power supply and voltage may cause fires, burns, electric shock, etc.
AC adapter: 100V AC (Connect only with a household AC outlet)
AC adapter available overseas: 100 to 240V AC (Connect only with a household AC outlet)
DC adapter: 12/24V DC (for negative grounded vehicles only)

Instruction

If you replace the fuse in the DC adapter, always replace it with a specified fuse.

May cause fires, burns, electric shock, etc. if you use the fuse other than specified one. Refer to the respective manuals for information on specified fuses.

Instruction

Wipe off any dust on the power plug.

May cause fires, burns, electric shock, etc. if you use the power plug with dust adhering.

Instruction

Fully plug the adapter into the outlet or accessory socket.

May cause fires, burns, electric shock, etc. if you do not insert it securely.

Instruction

Always grasp the adapters when unplugging the power plug from the outlet or accessory socket. Do not apply excessive force on it such as pulling the cord of the adapter.

May cause fires, burns, electric shock, etc. since the cord of the adapter is damaged by pulling it.

Instruction

When plugging/unplugging an adapter into/from the handset, plug/unplug it straightly toward the terminal to connect, not applying excessive force on it such as pulling the cord.

May cause fires, burns, bodily injury, electric shock, etc. if you do not plug/unplug it correctly.

Instruction

If the charger terminal is deformed such as bending it, immediately stop using. Also, do not use the deformed one by returning it to the original shape.

May cause fires, burns, bodily injury, electric shock, etc. because of short circuit of it.

Unplug

Unplug the power plug of the adapter from the outlet or accessory socket when not using.

May cause fires, burns, electric shock, etc. if you leave the power plug with it plugged into the outlet or accessory socket.

Unplug

If water or other liquids (drinking water, sweat, seawater, pet urine, etc.) enter the equipment, immediately remove the power plug from the outlet or accessory socket.

May cause fires, burns, electric shock, etc.

Unplug

Always unplug the power plug from the outlet or accessory socket before cleaning the equipment.

May cause fires, burns, electric shock, etc. if you do not unplug it.

⚠Caution

Don't

Do not touch the adapter for a long time when connected to an outlet or accessory socket.
May cause burns etc.

Handling nano UIM card

⚠Caution

Instruction

Be careful with the cutting surface not to injure any part of your body such as fingers when handling the nano UIM card.
May cause bodily injury etc.

Handling near electronic medical equipment

⚠Warning

Instruction

If you have electronic medical equipment such as an implanted cardiac pacemaker or an implanted cardioverter-defibrillator, always carry or use your handset at least 15 cm away from your implant.
Electromagnetic signals may have harmful effects on the operation of the electronic medical equipment.

Instruction

Patients receiving medical treatment away from a medical facility (e.g. home treatment) who are using electronic medical equipment other than implanted cardiac pacemakers or implanted cardioverter-defibrillators should consult the respective manufacturers etc. for information regarding the effects of signals on the equipment.
Electromagnetic signals may have harmful effects on the operation of the electronic medical equipment.

Instruction

If there is any chance that the distance between the handset and a person closest to you may get shorter than 15 cm such as when you cannot freely move around, set the handset not to emit radio wave in advance (by setting Airplane mode, turning the power off, etc.).

Somebody nearby may be equipped with electronic medical equipment such as an implanted cardiac pacemaker or an implanted cardioverter-defibrillator. Electromagnetic signals may have harmful effects on the operation of the electronic medical equipment.

Instruction

Follow the instructions given by the respective medical facilities regarding the use of the handset on their premises.

May have harmful effects on the operation of the electronic medical equipment.

Material list

Handset

Part	Material/Surface treatment
●●●●	●●●
●●●●	●●●
●●●●	●●●
●●●●	●●●
●●●●	●●●
●●●●	●●●
●●●●	●●●
●●●●	●●●
●●●●	●●●
●●●●	●●●
●●●●	●●●
●●●●	●●●

Handling the sample (SIM eject tool)

⚠Warning

Don't

The tip of the SIM eject tool is sharp. Do not use it pointing at yourself or others.
May hit you or others around you, resulting in bodily injury, loss of eyesight, etc.

Handling precautions

General notes

- **xxxx is waterproof/dustproof, however, do not allow liquid such as water (drinking water, sweat, seawater, pet urine, etc.) and foreign object such as dust to get inside the handset and do not allow them to adhere to accessories or optional parts.**

The adapter, nano UIM card and TV antenna cable are not waterproof/dustproof. Do not use in humid or steamy areas such as bathrooms and avoid exposing to rain and other forms of moisture. If they are carried close to the skin, perspiration may cause internal components to corrode and result in malfunction. If a problem is found to be due to moisture, the handset and parts are not covered by warranty. For details on repair, contact the number listed in "Repairs" (in Japanese only) on the last page or a repair counter that ●●● specifies.

- **Clean only with a soft and dry cloth (such as the type used for eyeglasses).**
  - Forceful rubbing of the display with a dry cloth etc. may scratch its surface.
  - Water drops, dirt, etc. left on the display may cause stains to form on its surface.
  - Never use chemicals such as alcohol, thinners, benzene or detergents, as these agents may erase the printing or cause discoloration.
- **Occasionally clean terminals, the fingerprint, etc.**
  When using unclean terminals etc., they may not work properly.
  Be careful with the terminals etc. while cleaning them.
- **Do not place the equipment near an air conditioning vent.**
  Condensation formed due to rapid changes in temperature may cause internal corrosion and lead to a malfunction.
- **Do not apply excessive force on the handset when using it.**
  Carrying the equipment in a tightly packed bag or sitting on it put in your pocket may cause damage to the display, internal components, internal battery, etc. or result in a malfunction.
  Keeping an external connector device plugged into the external connection jack may cause damage or a malfunction.
- **Use only optional parts specified by ●●●.**
  May cause a malfunction or damage when optional parts other than those specified by ●●● are used.
- **Read the respective user's guides supplied with supported optional parts carefully.**
- **Do not drop or otherwise subject the equipment to severe impact.**
  May cause a malfunction or damage.

Notes about the handset

- **Do not forcefully press the display or operate with a pointed object.**
  May scratch it and cause malfunction or damage.
- **Avoid using the handset in extremely high or low temperatures.**
  Use the handset within the range of a temperature between 5℃ and 35℃ and a humidity between 45% and 85%.
  Refer to the following for details on using it at a bathroom.
- **Using the handset close to land-line phones, TVs, radios, etc. may have harmful effects on the operation of such equipment. Move as far away as possible from such items before use.**
- **Back up to the microSD Card, PC, cloud, etc. or keep a separate memo noting data stored on the handset.**
  ●●● shall not be liable for any loss of content.

- **When connecting an external connector device to the external connection jack, do not put it in obliquely and do not pull it while it is plugged in.**
  May cause a malfunction or damage.
- **The handset becomes warm during use or charging but this is not a malfunction.**
- **Do not leave the camera lens in direct sunlight.**
  May cause discoloration or burn-in of pixels.
- **Use the handset with the nano UIM Card and microSD Card tray closed.**
  Liquid such as water (drinking water, sweat, seawater, pet urine, etc.) or foreign object such as dust may get inside and cause a malfunction.
- **Do not give a strong impact on the fingerprint sensor or scratch the surface.**
  May cause not only malfunction of the fingerprint sensor but also disabling authentication.
- **While using a microSD Card, do not remove the card or turn off the handset.**
  May cause data loss or a malfunction.
- **Never place a magnetic card or magnetized items near the handset.**
  The stored magnetic data in cash cards, credit cards, telephone cards, floppy disks, etc. may be erased.
  Putting highly magnetized items closer may cause an error.
- **Do not decorate the handset with films, stickers, etc.**
  The operation such as each function for using the proximity sensor/brightness sensor may not work normally.
  Refer to the following for details on the position of the proximity sensor/brightness sensor.
  ☞P. 28 “Part names and functions”
- **The internal battery is not covered by warranty because it is a consumable product.**
  Depending on usage, the internal battery may swell as it approaches the end of its usable life. Change the battery if the its life becomes extremely shorter or the it swells even after fully charged.For details on replacing the internal battery, contact the number listed in “Repairs” (in Japanese only) on the last page or a repair counter that ●●● specifies.
- **Charge battery in areas where ambient temperature is between 5℃ and 35℃ .**
- **The battery life depends on the usage and deterioration of the battery.**
- **Do not store the handset under the following situations because they may lower the performance or shorten the usable life of the internal battery.**
  - Storage with the internal battery fully charged (immediately after charging is completed)
  - Storage with no battery level (cannot turn the handset on)

  Approximately 40% is recommended as the proper battery level for storage.
- **The following is the type of the internal battery built into the handset.**

Label	Battery type
Li-ion00	Lithium-ion

- **The surface of the handset uses the aluminum material. Note that dent and abrasion are easily remained as aluminum is a soft material.**

Notes about adapters

- **Charge the battery in areas where the ambient temperature is between 5℃ and 35℃ .**
- **Do not charge the internal battery in the following locations.**
  - Areas with high humidity or dust, or in areas exposed to frequent vibrations
  - Close to land-line phones, TVs, radios, etc.
- **Adapters may become warm during charging but this is not a malfunction.**
- **Do not use the DC adapter to charge the battery when the car engine is not running.**
  May cause the car battery to run down.
- **When using an outlet with a feature to prevent the plug from being removed accidentally, follow the instructions in the outlet user's guide.**
- **Do not subject to strong impacts. Also, do not deform the charger terminals.**
  May cause a malfunction.

Notes about nano UIM card

- **Do not apply unnecessary force when inserting/removing the nano UIM card.**
- **Customer is responsible for malfunctions arising from inserting nano UIM card into a different IC card reader/ writer etc.**
- **Occasionally clean IC area.**
  When using the nano UIM card while IC area is not clean, it may not work properly.
- **Clean only with a soft and dry cloth (such as the type used for eyeglasses).**
- **Back up to the microSD Card, the PC, cloud, etc. or keep a separate memo noting data stored on the nano UIM card.**
  - ● shall not be liable for any loss of content.
- **To protect the environment, please take any unneeded nano UIM cards to a sales outlet such as a ●●● Shop.**
- **Do not damage, touch haphazardly or short-circuit the IC.**
  May cause data loss or a malfunction.
- **Do not drop or otherwise subject the nano UIM card to severe impact.**
  May cause a malfunction.
- **Never bend the nano UIM card or place heavy objects on it.**
  May cause a malfunction.
- **Do not insert the nano UIM card to the handset with a label, sticker, etc. attached on the card.**
  May cause a malfunction.

Notes on using Bluetooth function

- **The handset supports the security function that meets the Bluetooth specification for security during communication using Bluetooth functions. However, the security may not be sufficient depending on the configuration etc. Take care of the security while making communication using Bluetooth function.**
- **Even if any leak of data or information occurs while making communication using Bluetooth function, ●●● shall not be liable for any loss of content.**
- **Radio frequencies**

  In the home screen, [⚙] ▶[About phone]▶[Authentication] to confirm the radio frequencies the Bluetooth function of the handset uses. The followings are the descriptions:

① 2.4: This radio equipment uses the 2,400 MHz band.
② FH: The modulation system is the FH-SS system.
③ XX: Another modulation system is used.
④ 8: The estimated coverage distance is 80 m or less.
⑤ ▬▬: All radio frequencies between 2,400 MHz and 2,483.5 MHz are used and the frequencies for mobile object identifiers cannot be avoided.

- **Cautions on using Bluetooth devices**

  Bluetooth operates at radio frequencies assigned to the in-house radio stations for a mobile object identifier that have to be licensed and are used in production lines of a factory, specific unlicensed low power radio stations, and amateur radio stations (hereafter, referred to as "another radio station") in addition to industrial, scientific and medical devices or home electric appliances such as microwave ovens.

  1. **Before using the handset, make sure that "another radio station" is not operating nearby.**
  2. **If radio interference between the handset and "another radio station" occurs, avoid interference by moving immediately to another place or "turning off the power".**
  3. **Contact the number listed in "General Inquiries" on the last page for further details.**

Notes about wireless LAN (WLAN)

- **Wireless LAN (WLAN) uses radio waves to communicate information. Therefore, it has an advantage of freely connecting to the LAN within the service area. On the other hand, if security setting is not set, it is possible for a malicious third party to intercept the communication contents or hack. It is recommended to set security setting at your own risk and judgement.**
- **Wireless LAN**

  Do not use wireless LAN near magnetic devices such as electric appliances or AV/OA devices or in radio waves.
  - Magnetism or radio waves may increase noises or disable communications (especially when using a microwave oven).

- When used near TV, radio, etc., reception interference may occur or channels on the TV screen may be disturbed.
- If there are multiple wireless LAN access points nearby and the same channel is used, search may not work correctly.

● **Radio frequencies**

In the home screen, [⚙] ▶ [About phone] ▶ [Authentication] to confirm the radio frequencies the WLAN-installed devices use. The followings are the descriptions:

① 2.4: This radio equipment uses the 2,400 MHz band.
② DS: The modulation system is the DS-SS system.
③ OF: The modulation system is the OFDM system.
④ 4: The estimated coverage distance is 40 m or less.
⑤ ▬▬ ▬▬ ▬▬: All radio frequencies between 2,400 MHz and 2,483.5 MHz are used and the frequencies for mobile object identifiers can be avoided.

Available channels for the handset's wireless LAN are between 1 and 13. Note that other channel access points cannot be connected.
Available channels may vary depending on the country.
For use in an aircraft, contact the airline beforehand.

● **Cautions on using 2.4 GHz devices**

WLAN-installed devices operate at radio frequencies assigned to the in-house radio stations for a mobile object identifier (radio stations requiring a license) used in production lines of a factory, specific low power radio stations (radio stations requiring no license), and amateur radio stations (radio stations requiring a license) in addition to industrial, scientific and medical devices or home electric appliances such as microwave ovens.

1. Before using this device, make sure that the in-house radio stations for a mobile object identifier, specific low power radio stations and amateur radio stations are not operating nearby.
2. If the device causes harmful radio interference to the in-house radio stations for a mobile object identifier, immediately change the radio frequency or stop use, and contact the number listed in “General Inquiries” on the last page for crosstalk avoidance, etc. (e.g. partition setup).
3. If the device causes radio interference to specific low power radio stations for a mobile object identifier or amateur radio stations, contact the number listed in “General Inquiries” on the last page for further details.

● **Cautions on using 5 GHz devices**

In the 5 GHz frequency band, three bands of 5.2 GHz/5.3 GHz/5.6 GHz band (W52/W53/W56) are available.

- W52 (5.2 GHz band/36, 40, 44, 48 ch)
- W53 (5.3 GHz band/52, 56, 60, 64 ch)
- W56 (5.6 GHz band/100, 104, 108, 112, 116, 120, 124, 128, 132, 136, 140 ch)

Using 5.2 GHz/5.3 GHz band wireless LAN (W52/W53) outdoors is prohibited by the Radio Law.

Voluntary control for radio wave interference

- **This product satisfies technical requirements based on VCCI Rules for Voluntary Control Measures and its satisfied mark is displayed on the electronic nameplate of the product.**
  You can see the electronic nameplate by operating the product as follows.
  In the home screen, [ ] ▶ [About phone] ▶ [Authentication]

FeliCa and NFC reader/writer

- **The FeliCa, NFC reader/writer and P2P function of the handset use weak radio waves whose handling does not require a license of radio station.**
- **The frequency in use is the 13.56 MHz band. When another FeliCa, NFC reader/writer or P2P function is being used nearby, keep enough distance from it. Make sure that there is no radio station using the same frequency band in the nearby area.**
- **For use in an aircraft, contact the airline beforehand. Use of the function may be restricted in some countries.**
  Check conditions such as regulations of the country/region to use the function.

Notes about the sample (SIM eject tool)

- **Do not insert the SIM eject tool into the hole etc. other than those for ejecting the nano UIM Card and microSD Card tray.**
  May cause a malfunction or damage.
- **Do not apply excessive force on the SIM eject tool when using it.**
  May cause a malfunction or damage.
- **When discarding, segregate it according to the local rules.**
- **Use the SIM eject tool only for the intended purpose in this manual.**
  May cause a malfunction or damage.
- **Do not use the SIM eject tool for other mobile phones.** May cause malfunction or damage of other mobile phones.

Caution

- **Never use the handset that is modified. Using a modified device violates the Radio Law and/or the Telecommunications Business Law.**
  The handset follows the regulations regarding the certification of conformity with technical regulations for specific radio stations etc. based on the Radio Law and authentication of conformity with technical regulations for devices etc. based on the Telecommunications Business Law, and the “Technical Conformity Mark ⓣ can be displayed on the electronic nameplate of the handset as a proof. You can see it by operating as follows. In the home screen, [⚙] ▶[About phone]
  ▶[Authentication]
  If the screws of the handset are removed and a modification is given to the inside, the certification of conformity with technical regulations etc. will become invalid. Never use the handset without the valid certification etc. Doing so violates the Radio Law and/or the Telecommunications Business Law.
- **Be careful when using the handset while driving a motor vehicle.**
  Using the handset in hand while driving is regarded as a punishable act.
  However, the punishment has no application in some cases such as when rescuing sick and injured people or maintaining public safety.
- **The FeliCa reader and NFC reader/writer function of the handset conform to the domestic radio wave standards. When you use it overseas, check conditions such as regulations of the country/region in advance.**
- **Never change the basic software improperly.**
  This may be regarded as a conversion of software and repairs may be refused.

Before Using the Handset

Part names and functions

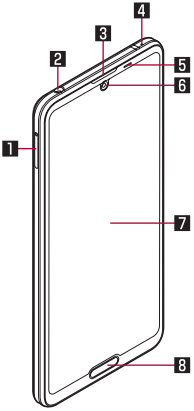

(This drawing is not final)

1 Nano UIM Card and microSD Card tray

- For details on nano UIM card ☞ P31"nano UIM card"
- For details on microSD Card ☞ P. 38 "microSD card"

2 Earphone/Microphone terminal

3 Earpiece/Speaker

4 Microphone

- Use when recording videos.
- Use to measure ambient noises for communicating by making your voices sound clear when using Clear talk.
- Use as a mouthpiece during a hands-free call.

5 Proximity sensor/Brightness sensor

- The proximity sensor detects the distance to the face and prevents inadvertent operation of touch panel during a call.
- The brightness sensor detects the brightness of the surrounding area and adjusts the brightness of the backlight.

6 Front camera

- For details on using camera ☞P. 119 "Camera"

7 Display/Touch panel

- For details on operation of the touch panel ☞P.38 "Operation of touch panel"

8 Fingerprint sensor

- Use to unlock the touch panel etc. by fingerprint authentication.
- For details on using fingerprint sensor ☞P.161 "Fingerprint authentication"

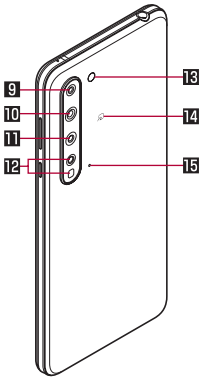

(This drawing is not final)

9 Telephoto camera

10 Wide camera

11 Standard camera

12 TOF

13 Mobile light

14 mark

z IC card is contained (It cannot be removed).

- For details on using mark ☞ z 203 “NFC communication”

15 Microphone

- Use when recording videos.

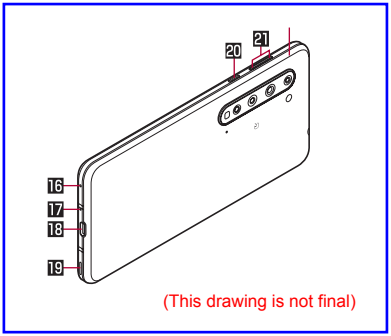

16 Incoming/Charging lamp

- For details on incoming/charging lamp ☞P.59 “Incoming/Charging lamp”

17 Mouthpiece/Microphone

- Use as a microphone when recording videos or talking.

18 USB Type-C connection jack

- Use to charge the handset, etc.

19 Speaker

- Ringtone, music, etc. can be heard from here.
- The other party's voice can be heard from here during a hands-free call.

20 Power key

21 (+)/(−): Volume up/down key

- The back cover cannot be removed. Removing it forcibly may cause damage or malfunction.
- The battery is built into the handset and you cannot replace it by yourself.

IMEI plate

- A plate with the sticker which the IMEI number (International Mobile Equipment Identifier), CE mark, etc. are printed is stowed near the nano UIM Card tray slot. The IMEI number is required when requesting servicing or repairs. Do not pull out the plate or remove the sticker.
  For details on precautions about handling the IMEI plate (model nameplate), refer to “After-Sales Services” (☞P.213).
- Note that pulling out the IMEI plate forcibly or adding forces on it may damage to the plate.
- If you accidentally pull out the IMEI plate, slowly return the IMEI plate while taking care not to insert it too deep.

Mobile light

- The mobile light may be automatically turned off if you use the handset for a long time or the handset becomes warm after the mobile light is turned on. Also, you may not be able to use the mobile light if the handset is warm.

Microphone

- When using functions which support the microphone, do not cover the hole of the microphone.

Earphone/Microphone

- Depending on the type of the earphone/microphone, it may not be available.

Charging with AC adapter

When charging with AC Adapter (sold separately), carry out the following operations.

1 Insert the Type-C plug of the AC adapter horizontally into the USB Type-C connection jack on the handset

2 Erect the AC adapter power plug and insert it into an outlet

- The charging lamp illuminates and charging starts.
- When charging is complete, the charging lamp turns off.

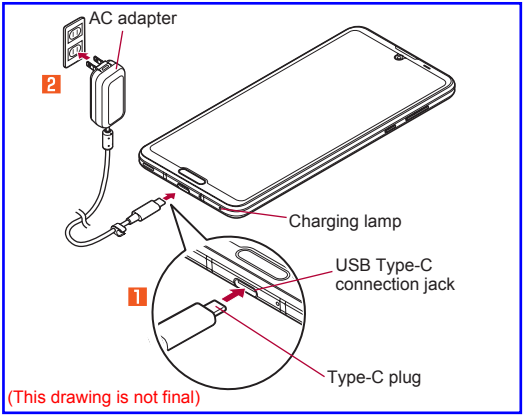

3 When charging is complete, pull the AC adapter power plug from the outlet and remove the Type-C plug of the AC adapter horizontally from the USB Type-C connection jack

- Refer to user's guide of AC Adapter.
- The shape of the plug for the AC adapter is for 100V AC (for domestic use). To use the AC adapter of 100 to 240V AC overseas, a conversion plug adapter applicable to your country of stay is required. Do not use a voltage converter for overseas travel to charge the battery.
- Note that inserting or removing the equipment forcibly may cause damage to the USB Type-C connection jack and the Type-C plug or result in a malfunction.

Charging with DC adapter

The DC adapter (sold separately) supplies the power for charging from a car accessory socket (12 and 24 V).

- The DC adapter should only be used in negative grounded vehicles (12 and 24V DC).
- Do not use with the car engine shut off. May drain the car battery.
- The DC adapter fuse is a consumable product. For replacement, purchase a new fuse at a nearest auto parts retailer etc.
- Refer to the user's guide of DC Adapter for details.

Charging with USB Cable

You can charge the handset by connecting the handset to a PC with USB cable (sold separately) etc.

- For details on connecting to a PC ☞P.178 “PC connection”

Turning power on/off

■ Turning power on

1 ▯(⏻)(for at least 2 seconds)

- When you turn the power on for the first time, make the initial settings (☞P.48 “Initial settings”).

■ Turning power off/Reboot/Emergency mode

1 ▯(⏻)(for at least 1 second)

2 Select an item

- Power off：Turn off the handset.
- Restart：Reboot the handset.
- Emergency mode：For details ☞P.41 “Emergency mode”

■ Turning display on/off

The display is turned off when ▯(⏻) is pressed or the handset is not in use for a set length of time.
Press ▯(⏻) while the display is turned off to turn it on.

■ Touch panel lock

When the power or the display is turned on, the touch panel is locked.
Touch [🔒] to unlock.

Operations in touch panel lock screen

- To set/disable the manner mode: ▯(—) (for at least 2 seconds)
- To activate Camera: [📷]
- To activate Clock: Touch the clock
- To display the detailed information on notifications: Drag the clock down
- To display the status panel: Drag the status bar down

Touch

Touch a key or an item displayed on the screen and then release your finger from it to select or set it.

Touch and hold

When you keep your finger on the touch panel, a menu may appear depending on the function and screen in use.

Slide (Swipe)/Drag

Move your finger while keeping it on the touch panel to scroll the screen or move an icon, a widget, etc. to the desired position.
In addition, when you touch a menu or an item by mistake, move your finger away from it to cancel the selection.

Flick

Move your finger like sweeping the touch panel in the home screen etc. to switch pages.

Pinch out/Pinch in

You may be able to zoom the screen in/out etc. by putting two fingers on the touch panel and moving them with putting a distance between two fingers apart (pinch out)/closer (pinch in) depending on the function and screen in use.

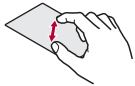

Operation while using function

Navigation keys

Use the navigation keys displayed at the bottom of the screen to perform the basic operations.

1 ◁/▽:Back key/Close key

- Return to the previous screen.
- Close the keyboard.

2 ○:Home key

- Display the home screen.

3 □/☰:Recent Apps key/Multi window key

- Display Recent Apps (☞P.61 “Recent Apps”).
- Indicates you are using Multi window (☞P.62 “Multi window”).

Wi-Fi settings

If you use Wi-Fi function of the handset, you can use mail or Internet by connecting to access points of your home, corporate network or public wireless LAN service.

Radio interference with Bluetooth devices

- Wireless LANs (IEEE 802.11b/g/n) use the same frequency band (2.4 GHz) as Bluetooth devices. Therefore, using the wireless LAN device near a Bluetooth device may cause radio interference, lowering of communication speed, noise or connection failure. In this case, turn off the Bluetooth device or keep the handset and the wireless LAN device at least approximately 10 m away from the Bluetooth device.

- Packet communication is also available while [Wi-Fi] is set to On. Wi-Fi connection is prioritized while Wi-Fi connection is set, but the connection is automatically switched to that of LTE/3G/GPRS network once Wi-Fi connection is terminated. Note that packet communication charges may be incurred in this case.
- Refer to the manual of your wireless LAN base unit when using the access point at home etc.
- Operate access point registration near the access point.

1 In the home screen, [ ] ▶ [Settings] ▶ [Wi-Fi]

2 Set to On

3 Select an access point

- If you select an access point protected by security, enter the password (security key) and select [CONNECT].
- To register access points manually: [Add network] ▶ enter the network name ▶ set security ▶ [SAVE]

- When you select an access point and connect to it with a wrong password (security key), [IP Configuration Failure], [WiFi Connection Failure], [Authentication problem] or [Connected (Limited)] is displayed. Confirm the password (security key). When [IP Configuration Failure] or [Connected (Limited)] is displayed after entering the correct password (security key), you may not have acquired the correct IP address. Connect to the access point again after confirming signal status.
- As for the manual registration of an access point, this function supports WEP, WPA/WPA2 PSK and 802.1xEAP as the security setting.
- If you connect to an access point which is not connected to the Internet, [ ] is displayed and the communication may be made by mobile networks, not Wi-Fi connection.
  To make Wi-Fi communication by using such an access point, enable [Using this AP without internet connection] of Advanced options before connecting to the access point.

Specific Absorption Rate (SAR) of Mobile Phones

This model xxxx mobile phone complies with Japanese technical regulations and international guidelines regarding exposure to radio waves.

This mobile phone was designed in observance of Japanese technical regulations regarding exposure to radio waves (*1) and limits to exposure to radio waves recommended by a set of equivalent international guidelines. This set of international guidelines was set out by the International Commission on Non-Ionizing Radiation Protection (ICNIRP), which is in collaboration with the World Health Organization (WHO), and the permissible limits include a substantial safety margin designed to assure the safety of all persons, regardless of age and health condition.

The technical regulations and international guidelines set out limits for radio waves as the Specific Absorption Rate, or SAR, which is the value of absorbed energy in any 10 grams of tissue over a 6-minute period. The SAR limit for mobile phones is 2.0 W/kg. The highest SAR value for this mobile phone when tested for use near the head is x.xxxW/kg (*2) and when worn on the body is x.xxxW/kg (*3). There may be slight differences between the SAR levels for each product, but they all satisfy the limit.

The actual SAR of this mobile phone while operating can be well below that indicated above. This is due to automatic changes to the power level of the device to ensure it only uses the minimum required to reach the network. Therefore in general, the closer you are to a base station, the lower the power output of the device.

This mobile phone can be used in positions other than against your head. Please keep the mobile phone farther than 1.0 cm away from your body by using such as a carrying case or a wearable accessory without including any metals. This mobile phone satisfies the technical regulations and international guidelines.

The World Health Organization has stated that “a large number of studies have been performed over the last two decades to assess whether mobile phones pose a potential health risk. To date, no adverse health effects have been established as being caused by mobile phone use.”

Please refer to the WHO website if you would like more detailed information.

http://www.who.int/docstore/peh-emf/publications/facts_press/ fact_english.htm

Please refer to the websites listed below if you would like more detailed information regarding SAR.

Ministry of Internal Affairs and Communications Website:

http://www.tele.soumu.go.jp/e/sys/ele/index.htm

Association of Radio Industries and Businesses Website:

http://www.arib-emf.org/01denpa/denpa02-02.html (in Japanese only)

*1 Technical regulations are defined by the Ministerial Ordinance Related to Radio Law (Article 14-2 of Radio Equipment Regulations).

*2 Including other radio systems that can be simultaneously used with LTE/FOMA.
*3 Including other radio systems that can be simultaneously used with LTE/FOMA.

European RF Exposure Information

Your mobile device is a radio transmitter and receiver. It is designed not to exceed the limits for exposure to radio waves recommended by international guidelines. These guidelines were developed by the independent scientific organization ICNIRP and include safety margins designed to assure the protection of all persons, regardless of age and health.
The guidelines use a unit of measurement known as the Specific Absorption Rate, or SAR. The SAR limit for mobile devices is 2 W/kg and the highest SAR value for this device when tested at the ear is 0.17 W/kg* and when worn on the body is 0.85 W/kg* .
For body-worn operation, this mobile device has been tested and meets the RF exposure guidelines when used with an accessory containing no metal and positioning the handset a minimum of 5 mm from the body. Use of other accessories may not ensure compliance with RF exposure guidelines.
As SAR is measured utilizing the devices highest transmitting power the actual SAR of this device while operating is typically below that indicated above. This is due to automatic changes to the power level of the device to ensure it only uses the minimum level required to reach the network.

* The tests are carried out in accordance with international guidelines for testing.

Regulatory information

* The following EU and EFTA member countries:
Belgium (BE), Bulgaria (BG), Czech Republic (CZ), Denmark (DK), Germany (DE), Estonia (EE), Ireland (IE), Greece (EL), Spain (ES), France (FR), Croatia (HR), Italy (IT), Cyprus (CY), Latvia (LV), Lithuania (LT), Luxembourg (LU), Hungary (HU), Malta (MT), Netherlands (NL), Austria (AT), Poland (PL), Portugal (PT), Romania (RO), Slovenia (SI), Slovakia (SK), Finland (FI), Sweden (SE) and United Kingdom (UK), Switzerland (CH), Liechtenstein (LI), Iceland (IS), Norway (NO).

Norway: Use of this radio equipment is not allowed in the geographical area within a radius of 20 km from the centre of Ny-Alesund, Svalbard.

● **Description of accessories**

Headset, Handsfree	Φ3.5 audio jack, Bluetooth.
USB cable	For charging, peripherals, etc.
microSD Card	microSD/microSDHC/microSDXC
nano UIM card	nano UIM card/non nano UIM cards non-nano UIM cards can be used after SIMunlocking the handset.

● **Frequency range of supported bands in EU**

GSM 900	Tx 880.2 to 914.8 MHz Rx 925.2 to 959.8 MHz
DCS 1800	Tx 1710.2 to 1784.8 MHz Rx 1805.2 to 1879.8 MHz
WCDMA FDD I	Tx 1922.4 to 1977.6 MHz Rx 2112.4 to 2167.6 MHz
WCDMA FDD VIII	Tx 882.4 to 912.6 MHz Rx 927.4 to 957.6 MHz
LTE Band 1	Tx 1922.5 to 1977.5 MHz Rx 2112.5 to 2167.5 MHz
LTE Band 3	Tx 1710.7 to 1784.3 MHz Rx 1805.7 to 1879.3 MHz
LTE Band 7	Tx 2502.5 to 2567.5 MHz Rx 2622.5 to 2687.5 MHz
LTE Band 8	Tx 880.7 to 914.3 MHz Rx 925.7 to 959.3 MHz
LTE Band 20	Tx 834.5 to 859.5 MHz Rx 793.5 to 818.5 MHz
LTE Band 28	Tx 704.5 to 746.5 MHz Rx 759.5 to 801.5 MHz
LTE Band 38	Tx 2572.5 to 2617.5 MHz Rx 2572.5 to 2617.5 MHz
LTE Band 40	Tx/Rx 2302.5 to 2397.5 MHz
Bluetooth	Tx 2402 to 2480 MHz Rx 2402 to 2480 MHz
WLAN 2.4 GHz	Tx/Rx 2412 to 2472 MHz (BW: 20MHz) Tx/Rx 2422 to 2462 MHz (BW: 40MHz)
WLAN 5 GHz	W52(U-NII 1): Tx/Rx 5180 to 5240 MHz (BW: 20MHz) Tx/Rx 5190 to 5230 MHz (BW: 40MHz) Tx/Rx 5210 MHz (BW: 80MHz) W53(U-NII 2A): Tx/Rx 5260 to 5320 MHz (BW: 20MHz) Tx/Rx 5270 to 5310 MHz (BW: 40MHz) Tx/Rx 5290 MHz (BW: 80MHz) W56(U-NII 2C): Tx/Rx 5500 to 5700 MHz (BW: 20MHz) Tx/Rx 5510 to 5670 MHz (BW: 40MHz) Tx/Rx 5530 to 5610 MHz (BW: 80MHz)
NFC	Tx/Rx 13.56 MHz
GNSS	GPS: Rx L1 (1575.42 MHz) /L5 (1176.45 MHz) GLONASS: Rx G1 (1598.0625 to 1605.375 MHz) Galileo: Rx E1 (1575.42 MHz) /E5a (1176.45 MHz) BeiDou: Rx B1 (1561.098 MHz)

● **Maximum transmit power**

GSM 900	+33 dBm (Power Class4)
DCS 1800	+30 dBm (Power Class1)
WCDMA FDD I	+24 dBm (Power Class3)
WCDMA FDD VIII	+24 dBm (Power Class3)
LTE Band 1	+23 dBm (Power Class3)
LTE Band 3	+23 dBm (Power Class3)
LTE Band 7	+23 dBm (Power Class3)
LTE Band 8	+23 dBm (Power Class3)
LTE Band 20	+23 dBm (Power Class3)
LTE Band 28	+23 dBm (Power Class3)
LTE Band 38	+23 dBm (Power Class3)
LTE Band 40	+23 dBm (Power Class3)
Bluetooth	+12.5 dBm (Power Class1)
WLAN 2.4 GHz	+15.0 dBm (ANT0+ANT1)
WLAN 5 GHz	+15.0 dBm (ANT0+ANT1)
NFC	0 dBμA/m at 10 m

Battery - CAUTION

Use specified Charger only.

Non-specified equipment use may cause malfunctions, electric shock or fire due to battery leakage, overheating or bursting.

The battery is embedded inside the product. Avoid removing the embedded battery since this may cause overheating or bursting.

Do not dispose of the product with ordinary refuse. Take the product to an Shop, or follow the local disposal regulations.

Charge battery in ambient temperatures between 5°C and 35°C; outside this range, battery may leak/overheat and performance may deteriorate.

Volume level caution

To prevent possible hearing damage, do not listen at high volume levels for long periods.

Earphone Signal Level

The maximum output voltage for the music player function, measured in accordance with EN 50332-2, is 120.0 mV.

FCC Notice

- This device complies with part 15 of the FCC Rules. Operation is subject to the following two conditions: (1) This device may not cause harmful interference, and (2) this device must accept any interference received, including interference that may cause undesired operation.
- Changes or modifications not expressly approved by the manufacturer responsible for compliance could void the user's authority to operate the equipment.

Information to User

This equipment has been tested and found to comply with the limits of a Class B digital device, pursuant to Part 15 of the FCC Rules. These limits are designed to provide reasonable protection against harmful interference in a residential installation. This equipment generates, uses and can radiate radio frequency energy and, if not installed and used in accordance with the instructions, may cause harmful interference to radio communications.

However, there is no guarantee that interference will not occur in a particular installation; if this equipment does cause harmful interference to radio or television reception, which can be determined by turning the equipment off and on, the user is encouraged to try to correct the interference by one or more of the following measures:

1. Reorient/relocate the receiving antenna.
2. Increase the separation between the equipment and receiver.
3. Connect the equipment into an outlet on a circuit different from that to which the receiver is connected.
4. Consult the dealer or an experienced radio/TV technician for help.

FCC RF Exposure Information

Your handset is a radio transmitter and receiver.

It is designed and manufactured not to exceed the emission limits for exposure to radio frequency (RF) energy set by the Federal Communications Commission of the U.S. Government.

The guidelines are based on standards that were developed by independent scientific organizations through periodic and thorough evaluation of scientific studies. The standards include a substantial safety margin designed to assure the safety of all persons, regardless of age and health.

The exposure standard for wireless handsets employs a unit of measurement known as the Specific Absorption Rate, or SAR. The SAR limit set by the FCC is 1.6 W/kg.

The tests are performed in positions and locations (e.g., at the ear and worn on the body) as required by the FCC for each model.

The highest SAR value for this model handset when tested for use at the ear is 0.22 W/kg and when worn on the body, as described in this user guide, is 0.42 W/kg.

For body worn operation, this phone has been tested and meets the FCC RF exposure guidelines. Please use an accessory designated for this product or an accessory which contains no metal and which positions the handset a minimum of 1.0 cm from the body.

The use of accessories that do not satisfy these requirements may not comply with FCC RF exposure requirements, and should be avoided.

The FCC has granted an Equipment Authorization for this model handset with all reported SAR levels evaluated as in compliance with the FCC RF emission guidelines. SAR information on this model handset is on file with the FCC and can be found under the Display Grant section of http://transition.fcc.gov/oet/ea/fccid/ after searching on FCC ID APYHRO00281.

Additional information on Specific Absorption Rates (SAR) can be found on the FCC website at http://www.fcc.gov/general/radio-frequency-safety-0.

FCC ID Location

The device is electronically labeled and the FCC ID can be displayed via the About phone & the Authentication under the Settings menu.

Bluetooth® word mark and logo are registered trademarks owned by the Bluetooth SIG Inc., and (Manufacturer) is licensed to use these trademarks.