#01_WCDMA II_RMC 12.2Kbps_Right Side_10mm_Ch9538

Communication System: WCDMA; Frequency: 1907.6 MHz;Duty Cycle: 1:1
Medium: HSL_1900_191229 Medium parameters used: f = 1908 MHz; σ = 1.458 S/m; ε_r = 40.217; ρ = 1000 kg/m^3
Ambient Temperature：23.5 ℃; Liquid Temperature：22.5 ℃

DASY5 Configuration:
- Probe: EX3DV4 - SN3728; ConvF(7.7, 7.7, 7.7) @ 1907.6 MHz; Calibrated: 2019/1/15
- Sensor-Surface: 1.4mm (Mechanical Surface Detection)
- Electronics: DAE4 Sn778; Calibrated: 2019/5/21
- Phantom: ELI v5.0; Type: QDOVA002AA; Serial: 1131
- Measurement SW: DASY52, Version 52.10 (2);SEMCAD X Version 14.6.12 (7470)

Area Scan (41x61x1): Interpolated grid: dx=1.500 mm, dy=1.500 mm
Maximum value of SAR (interpolated) = 1.88 W/kg

Zoom Scan (5x5x7)/Cube 0: Measurement grid: dx=8mm, dy=8mm, dz=5mm
Reference Value = 36.40 V/m; Power Drift = -0.00 dB
Peak SAR (extrapolated) = 2.22 W/kg
SAR(1 g) = 1.06 W/kg; SAR(10 g) = 0.584 W/kg
Maximum value of SAR (measured) = 1.77 W/kg

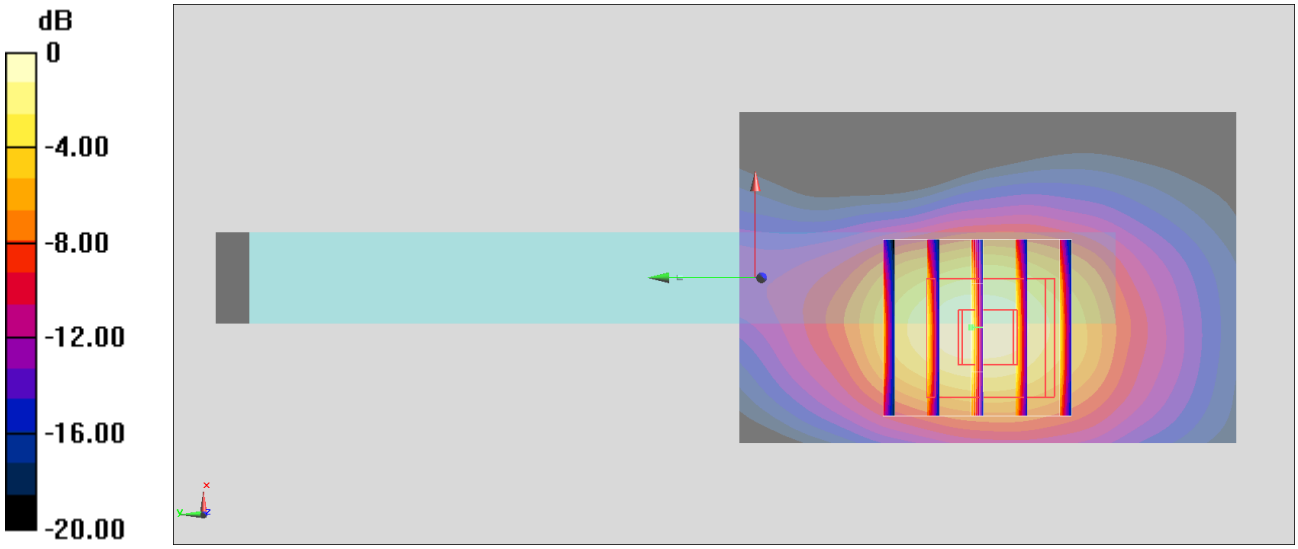

0 dB = 1.88 W/kg = 2.74 dBW/kg

#02_WCDMA IV_RMC 12.2Kbps_Right Side_10mm_Ch1513

Communication System WCDMA; Frequency: 1752.6 MHz;Duty Cycle: 1:1
Medium: HSL_1750_191229 Medium parameters used: f = 1753 MHz; σ = 1.384 S/m; ε_r = 40.659; ρ = 1000 kg/m^3
Ambient Temperature：23.5 ℃; Liquid Temperature：22.5 ℃

DASY5 Configuration:
- Probe: EX3DV4 - SN3728; ConvF(8.13, 8.13, 8.13) @ 1752.6 MHz; Calibrated: 2019/1/15
- Sensor-Surface: 1.4mm (Mechanical Surface Detection)
- Electronics: DAE4 Sn778; Calibrated: 2019/5/21
- Phantom: ELI v5.0; Type: QDOVA002AA; Serial: 1131
- Measurement SW: DASY52, Version 52.10 (2);SEMCAD X Version 14.6.12 (7470)

Area Scan (41x61x1): Interpolated grid: dx=1.500 mm, dy=1.500 mm
Maximum value of SAR (interpolated) = 1.27 W/kg

Zoom Scan (5x5x7)/Cube 0: Measurement grid: dx=8mm, dy=8mm, dz=5mm
Reference Value = 31.24 V/m; Power Drift = -0.01 dB
Peak SAR (extrapolated) = 1.55 W/kg
SAR(1 g) = 0.839 W/kg; SAR(10 g) = 0.436 W/kg
Maximum value of SAR (measured) = 1.25 W/kg

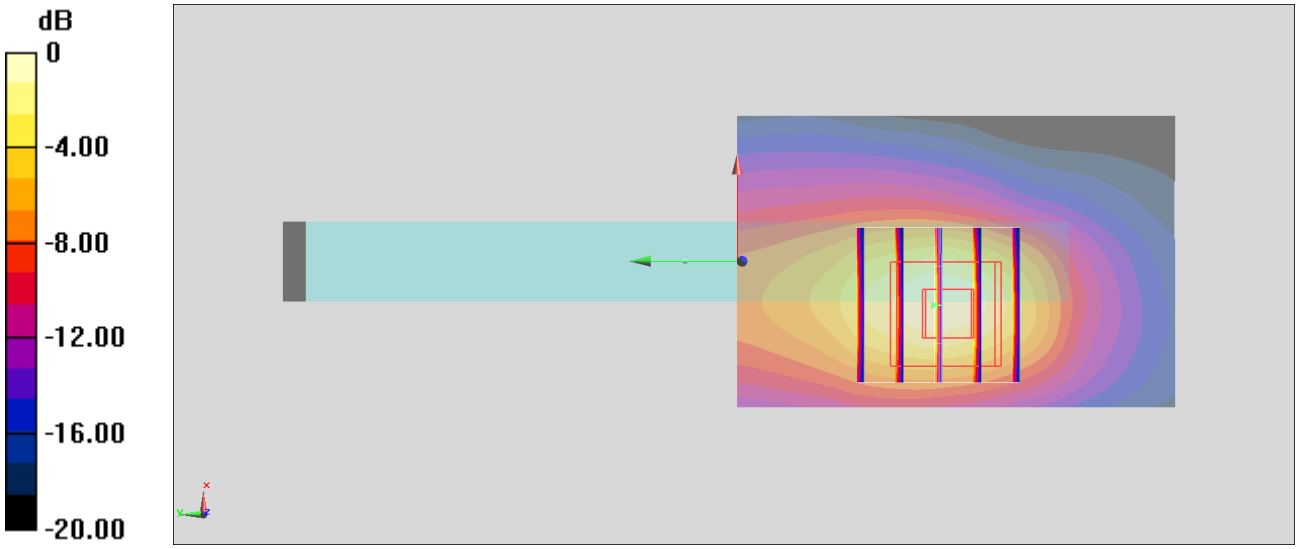

0 dB = 1.27 W/kg = 1.04 dBW/kg

#03_WCDMA V_RMC 12.2Kbps_Back_10mm_Ch4182

Communication System: WCDMA; Frequency: 836.4 MHz;Duty Cycle: 1:1
Medium: HSL_850_191231 Medium parameters used : f = 836.4 MHz; σ = 0.896 S/m; ε_r = 42.267; ρ = 1000 kg/m^3
Ambient Temperature：23.7 ℃; Liquid Temperature：22.7 ℃

DASY5 Configuration:
- Probe: EX3DV4 - SN3931; ConvF(9.8, 9.8, 9.8) @ 836.4 MHz; Calibrated: 2019/9/26
- Sensor-Surface: 1.4mm (Mechanical Surface Detection)
- Electronics: DAE3 Sn495; Calibrated: 2019/5/21
- Phantom: SAM_Right; Type: SAM; Serial: TP:1446
- Measurement SW: DASY52, Version 52.10 (2);SEMCAD X Version 14.6.12 (7450)

Area Scan (71x81x1): Interpolated grid: dx=1.500 mm, dy=1.500 mm
Maximum value of SAR (interpolated) = 1.27 W/kg

Zoom Scan (5x5x7)/Cube 0: Measurement grid: dx=8mm, dy=8mm, dz=5mm
Reference Value = 37.34 V/m; Power Drift = 0.01 dB
Peak SAR (extrapolated) = 1.44 W/kg
SAR(1 g) = 0.901 W/kg; SAR(10 g) = 0.582 W/kg
Maximum value of SAR (measured) = 1.23 W/kg

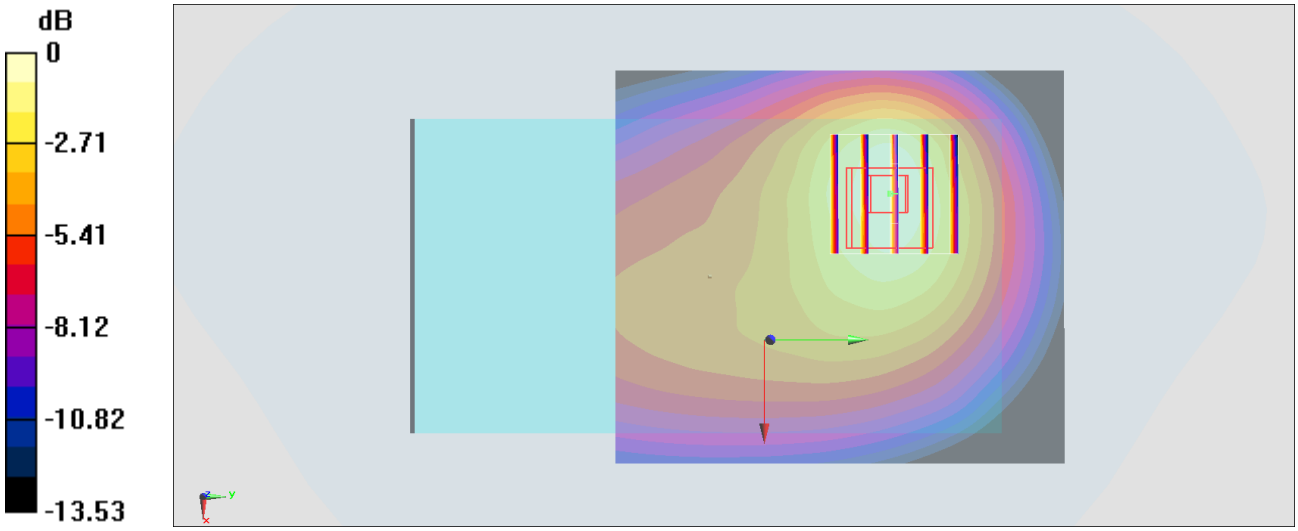

0 dB = 1.23 W/kg = 0.90 dBW/kg

#04_LTE Band 2_20M_QPSK_1_0_Right Side_10mm_Ch19100

Communication System: LTE; Frequency: 1900 MHz;Duty Cycle: 1:1
Medium: HSL_1900_191229 Medium parameters used: f = 1900 MHz; σ = 1.45 S/m; ε_r = 40.254; ρ = 1000 kg/m^3
Ambient Temperature：23.5 ℃; Liquid Temperature：22.5 ℃

DASY5 Configuration:
- Probe: EX3DV4 - SN3728; ConvF(7.7, 7.7, 7.7) @ 1900 MHz; Calibrated: 2019/1/15
- Sensor-Surface: 1.4mm (Mechanical Surface Detection)
- Electronics: DAE4 Sn778; Calibrated: 2019/5/21
- Phantom: ELI v5.0; Type: QDOVA002AA; Serial: 1131
- Measurement SW: DASY52, Version 52.10 (2);SEMCAD X Version 14.6.12 (7470)

Area Scan (41x61x1): Interpolated grid: dx=1.500 mm, dy=1.500 mm
Maximum value of SAR (interpolated) = 1.42 W/kg

Zoom Scan (5x5x7)/Cube 0: Measurement grid: dx=8mm, dy=8mm, dz=5mm
Reference Value = 31.11 V/m; Power Drift = -0.13 dB
Peak SAR (extrapolated) = 1.62 W/kg
SAR(1 g) = 0.876 W/kg; SAR(10 g) = 0.441 W/kg
Maximum value of SAR (measured) = 1.34 W/kg

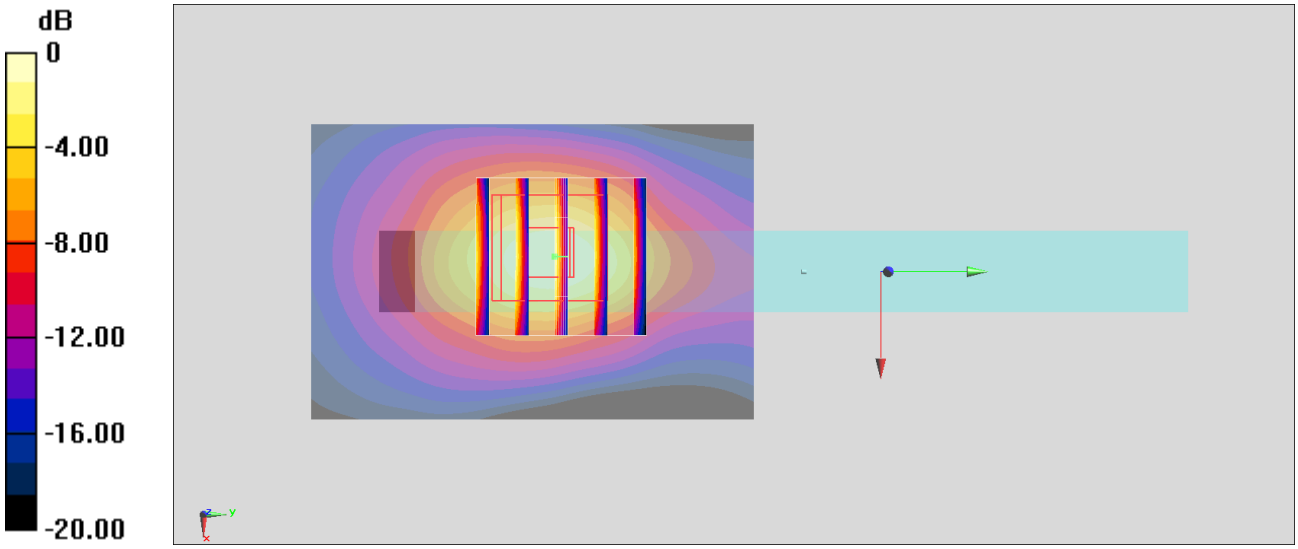

0 dB = 1.42 W/kg = 1.52 dBW/kg

#05_LTE Band 4_20M_QPSK_1_0_Back_10mm_Ch20175

Communication System: LTE; Frequency: 1732.5 MHz;Duty Cycle: 1:1
Medium: HSL_1750_191229 Medium parameters used: f = 1733 MHz; σ = 1.366 S/m; ε_r = 40.815; ρ = 1000 kg/m^3
Ambient Temperature：23.5 ℃; Liquid Temperature：22.5 ℃

DASY5 Configuration:
- Probe: EX3DV4 - SN3728; ConvF(8.13, 8.13, 8.13) @ 1732.5 MHz; Calibrated: 2019/1/15
- Sensor-Surface: 1.4mm (Mechanical Surface Detection)
- Electronics: DAE4 Sn778; Calibrated: 2019/5/21
- Phantom: ELI v5.0; Type: QDOVA002AA; Serial: 1131
- Measurement SW: DASY52, Version 52.10 (2);SEMCAD X Version 14.6.12 (7470)

Area Scan (81x71x1): Interpolated grid: dx=1.500 mm, dy=1.500 mm
Maximum value of SAR (interpolated) = 1.13 W/kg

Zoom Scan (5x5x7)/Cube 0: Measurement grid: dx=8mm, dy=8mm, dz=5mm
Reference Value = 27.69 V/m; Power Drift = 0.14 dB
Peak SAR (extrapolated) = 1.35 W/kg
SAR(1 g) = 0.775 W/kg; SAR(10 g) = 0.436 W/kg
Maximum value of SAR (measured) = 1.13 W/kg

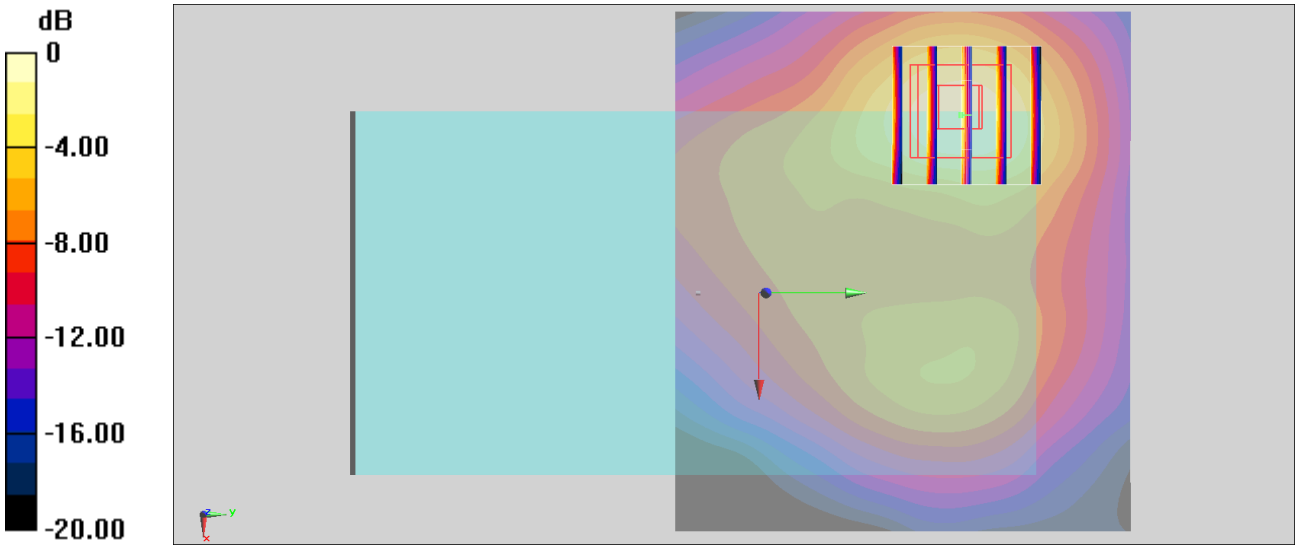

0 dB = 1.13 W/kg = 0.53 dBW/kg

#06_LTE Band 5_10M_QPSK_1_0_Back_10mm_Ch20525

Communication System: LTE ; Frequency: 836.5 MHz;Duty Cycle: 1:1
Medium: HSL_850_191231 Medium parameters used : f = 836.5 MHz; σ = 0.896 S/m; ε_r = 42.266; ρ = 1000 kg/m^3
Ambient Temperature：23.7 ℃; Liquid Temperature：22.7 ℃

DASY5 Configuration:
- Probe: EX3DV4 - SN3931; ConvF(9.8, 9.8, 9.8) @ 836.5 MHz; Calibrated: 2019/9/26
- Sensor-Surface: 1.4mm (Mechanical Surface Detection)
- Electronics: DAE3 Sn495; Calibrated: 2019/5/21
- Phantom: SAM_Right; Type: SAM; Serial: TP:1446
- Measurement SW: DASY52, Version 52.10 (2);SEMCAD X Version 14.6.12 (7450)

Area Scan (71x91x1): Interpolated grid: dx=1.500 mm, dy=1.500 mm
Maximum value of SAR (interpolated) = 1.03 W/kg

Zoom Scan (5x5x7)/Cube 0: Measurement grid: dx=8mm, dy=8mm, dz=5mm
Reference Value = 33.74 V/m; Power Drift = 0.02 dB
Peak SAR (extrapolated) = 1.16 W/kg
SAR(1 g) = 0.735 W/kg; SAR(10 g) = 0.475 W/kg
Maximum value of SAR (measured) = 0.998 W/kg

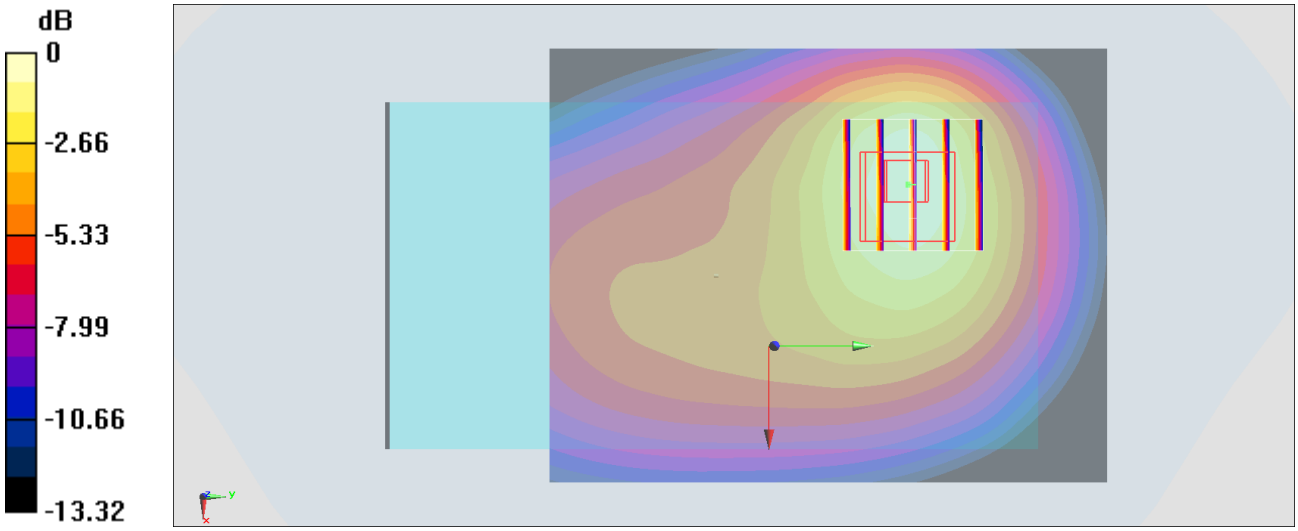

0 dB = 0.998 W/kg = -0.01 dBW/kg

#07_LTE Band 7_20M_QPSK_100_0_Right Side_10mm_Ch20850

Communication System: LTE ; Frequency: 2510 MHz;Duty Cycle: 1:1
Medium: HSL_2600_191228 Medium parameters used: f = 2510 MHz; σ = 1.848 S/m; ε_r = 38.773; ρ = 1000 kg/m^3
Ambient Temperature：23.6 ℃; Liquid Temperature：22.6 ℃

DASY5 Configuration:
- Probe: EX3DV4 - SN3728; ConvF(6.94, 6.94, 6.94) @ 2510 MHz; Calibrated: 2019/1/15
- Sensor-Surface: 1.4mm (Mechanical Surface Detection)
- Electronics: DAE4 Sn778; Calibrated: 2019/5/21
- Phantom: ELI v5.0; Type: QDOVA002AA; Serial: 1131
- Measurement SW: DASY52, Version 52.10 (2);SEMCAD X Version 14.6.12 (7470)

Area Scan (51x71x1): Interpolated grid: dx=1.200 mm, dy=1.200 mm
Maximum value of SAR (interpolated) = 1.08 W/kg

Zoom Scan (7x7x7)/Cube 0: Measurement grid: dx=5mm, dy=5mm, dz=5mm
Reference Value = 24.37 V/m; Power Drift = -0.05 dB
Peak SAR (extrapolated) = 1.34 W/kg
SAR(1 g) = 0.693 W/kg; SAR(10 g) = 0.347 W/kg
Maximum value of SAR (measured) = 1.10 W/kg

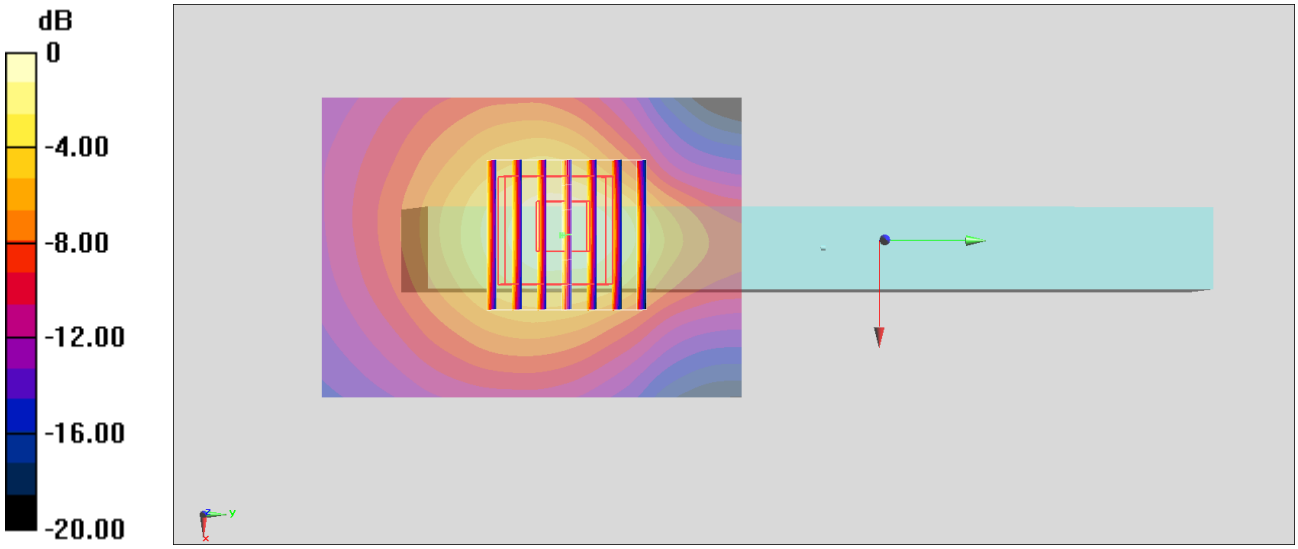

0 dB = 1.08 W/kg = 0.33 dBW/kg

#08_LTE Band 12_10M_QPSK_1_0_Front_10mm_Ch23095

Communication System: LTE; Frequency: 707.5 MHz;Duty Cycle: 1:1
Medium: HSL_750_191231 Medium parameters used : f = 707.5 MHz; σ = 0.849 S/m; ε_r = 42.965; ρ = 1000 kg/m^3
Ambient Temperature：23.7 ℃; Liquid Temperature：22.7 ℃

DASY5 Configuration:
- Probe: EX3DV4 - SN3931; ConvF(9.99, 9.99, 9.99) @ 707.5 MHz; Calibrated: 2019/9/26
- Sensor-Surface: 1.4mm (Mechanical Surface Detection)
- Electronics: DAE3 Sn495; Calibrated: 2019/5/21
- Phantom: SAM_Right; Type: SAM; Serial: TP:1446
- Measurement SW: DASY52, Version 52.10 (2);SEMCAD X Version 14.6.12 (7450)

Area Scan (71x81x1): Interpolated grid: dx=1.500 mm, dy=1.500 mm
Maximum value of SAR (interpolated) = 0.322 W/kg

Zoom Scan (5x5x7)/Cube 0: Measurement grid: dx=8mm, dy=8mm, dz=5mm
Reference Value = 19.35 V/m; Power Drift = -0.03 dB
Peak SAR (extrapolated) = 0.360 W/kg
SAR(1 g) = 0.236 W/kg; SAR(10 g) = 0.160 W/kg
Maximum value of SAR (measured) = 0.312 W/kg

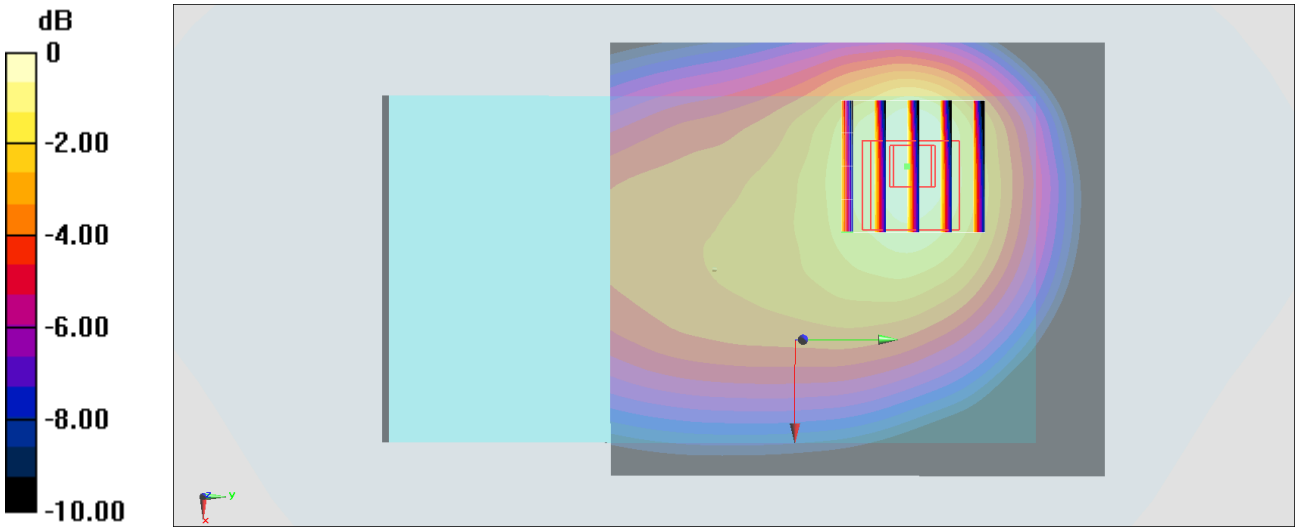

0 dB = 0.312 W/kg = -5.06 dBW/kg

#09_LTE Band 13_10M_QPSK_1_0_Back_10mm_Ch23230

Communication System: LTE; Frequency: 782 MHz;Duty Cycle: 1:1
Medium: HSL_750_191231 Medium parameters used: f = 782 MHz; σ = 0.919 S/m; ε_r = 41.965; ρ = 1000 kg/m^3
Ambient Temperature：23.7 ℃; Liquid Temperature：22.7 ℃

DASY5 Configuration:
- Probe: EX3DV4 - SN3931; ConvF(9.99, 9.99, 9.99) @ 782 MHz; Calibrated: 2019/9/26
- Sensor-Surface: 1.4mm (Mechanical Surface Detection)
- Electronics: DAE3 Sn495; Calibrated: 2019/5/21
- Phantom: SAM_Right; Type: SAM; Serial: TP:1446
- Measurement SW: DASY52, Version 52.10 (2);SEMCAD X Version 14.6.12 (7450)

Area Scan (71x81x1): Interpolated grid: dx=1.500 mm, dy=1.500 mm
Maximum value of SAR (interpolated) = 0.460 W/kg

Zoom Scan (5x5x7)/Cube 0: Measurement grid: dx=8mm, dy=8mm, dz=5mm
Reference Value = 23.55 V/m; Power Drift = -0.10 dB
Peak SAR (extrapolated) = 0.504 W/kg
SAR(1 g) = 0.373 W/kg; SAR(10 g) = 0.263 W/kg
Maximum value of SAR (measured) = 0.461 W/kg

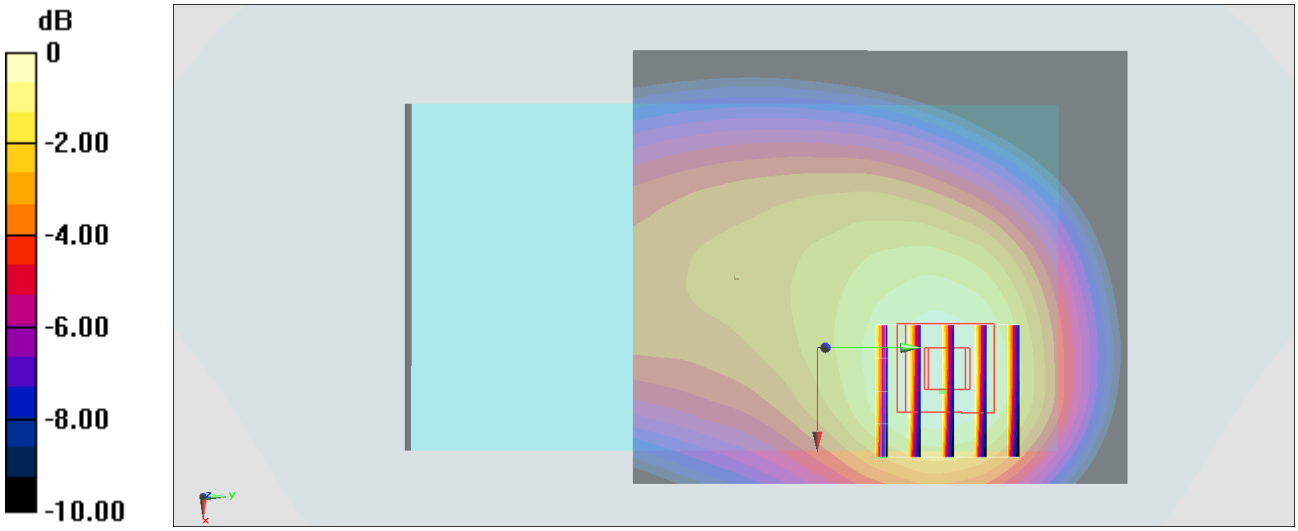

0 dB = 0.461 W/kg = -3.36 dBW/kg

#10_LTE Band 41 HPUE_20M_QPSK_1_0_Back_10mm_Ch40185

Communication System: LTE ; Frequency: 2549.5 MHz;Duty Cycle: 1:2.33
Medium: HSL_2600_191228 Medium parameters used: f = 2550 MHz; σ = 1.89 S/m; ε_r = 38.642; ρ = 1000 kg/m^3
Ambient Temperature：23.6 ℃; Liquid Temperature：22.6 ℃

DASY5 Configuration:
- Probe: EX3DV4 - SN3728; ConvF(6.94, 6.94, 6.94) @ 2549.5 MHz; Calibrated: 2019/1/15
- Sensor-Surface: 1.4mm (Mechanical Surface Detection)
- Electronics: DAE4 Sn778; Calibrated: 2019/5/21
- Phantom: ELI v5.0; Type: QDOVA002AA; Serial: 1131
- Measurement SW: DASY52, Version 52.10 (2);SEMCAD X Version 14.6.12 (7470)

Area Scan (101x91x1): Interpolated grid: dx=1.200 mm, dy=1.200 mm
Maximum value of SAR (interpolated) = 0.496 W/kg

Zoom Scan (7x7x7)/Cube 0: Measurement grid: dx=5mm, dy=5mm, dz=5mm
Reference Value = 12.54 V/m; Power Drift = 0.05 dB
Peak SAR (extrapolated) = 1.26 W/kg
SAR(1 g) = 0.515 W/kg; SAR(10 g) = 0.236 W/kg
Maximum value of SAR (measured) = 0.957 W/kg

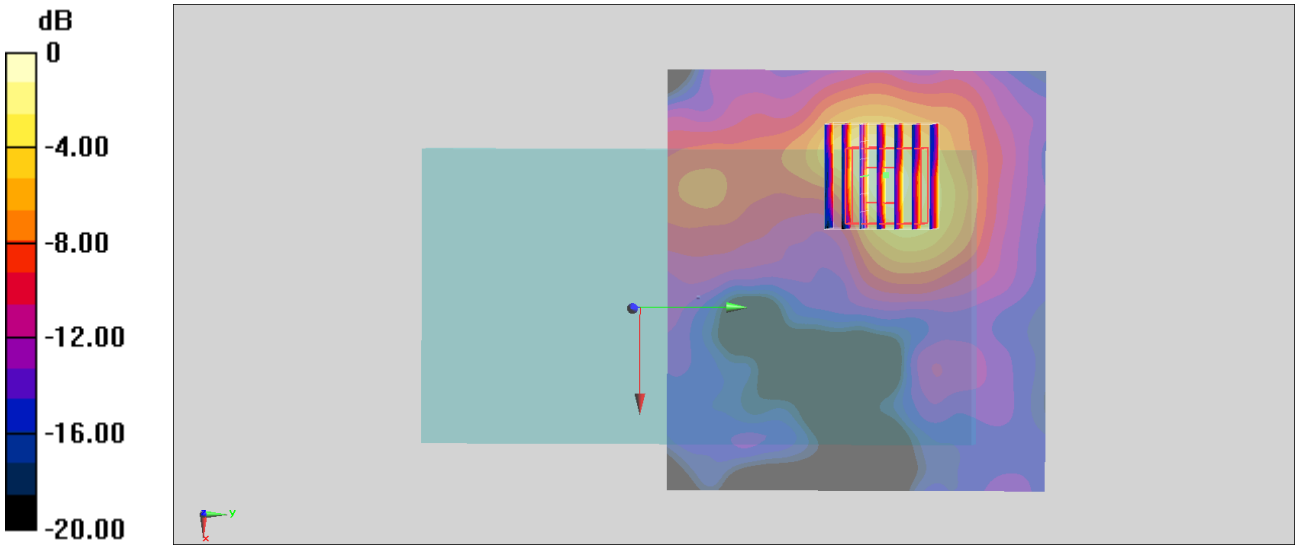

0 dB = 0.496 W/kg = -3.05 dBW/kg

#11_WLAN2.4GHz_802.11b 1Mbps_Left Side_10mm_Ch11;Ant 1

Communication System: 802.11b; Frequency: 2462 MHz;Duty Cycle: 1:1.02
Medium: HSL_2450_200101 Medium parameters used: f = 2462 MHz; σ = 1.832 S/m; ε_r = 39.751; ρ = 1000 kg/m^3
Ambient Temperature：23.3 ℃; Liquid Temperature：22.3 ℃

DASY5 Configuration:
- Probe: EX3DV4 - SN3931; ConvF(7.61, 7.61, 7.61) @ 2462 MHz; Calibrated: 2019/9/26
- Sensor-Surface: 1.4mm (Mechanical Surface Detection)
- Electronics: DAE4 Sn778; Calibrated: 2019/5/21
- Phantom: SAM_Left; Type: QD000P40CD; Serial: 1719
- Measurement SW: DASY52, Version 52.10 (2);SEMCAD X Version 14.6.12 (7450)

Area Scan (51x151x1): Interpolated grid: dx=1.200 mm, dy=1.200 mm
Maximum value of SAR (interpolated) = 0.175 W/kg

Zoom Scan (7x7x7)/Cube 0: Measurement grid: dx=5mm, dy=5mm, dz=5mm
Reference Value = 10.20 V/m; Power Drift = -0.04 dB
Peak SAR (extrapolated) = 0.225 W/kg
SAR(1 g) = 0.115 W/kg; SAR(10 g) = 0.056 W/kg
Maximum value of SAR (measured) = 0.184 W/kg

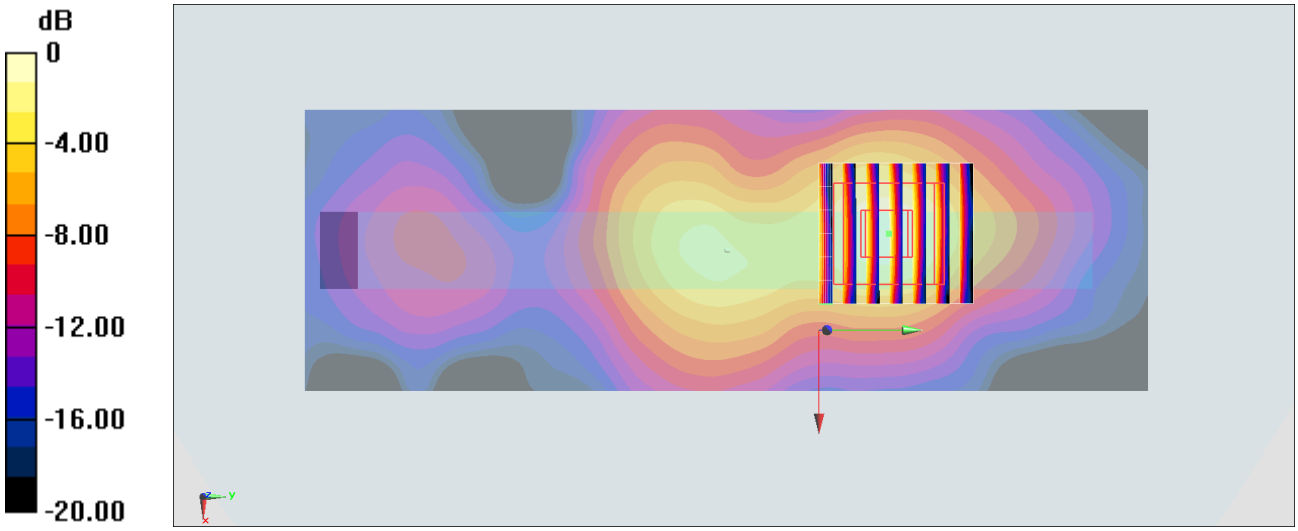

0 dB = 0.184 W/kg = -7.35 dBW/kg